LMC66x CMOS 双通道运算放大器

1 特性

- 轨到轨输出摆幅
- 适用于 2kΩ 和 600Ω 负载
- 高压增益：126dB
- 低输入失调电压：3mV
- 低失调电压漂移：1.3μV/°C
- 超低输入偏置电流：2fA
- 低电压噪声：22nV/$\sqrt{Hz}$
- 输入共模范围包括 V–
- 工作电源电压范围为 4.75V 至 15.5V
- I_{SS} = 400μA/放大器；与 V+ 无关
- 压摆率：1.1V/μs

2 应用

- 高阻抗缓冲器或前置放大器
- 精密电流到电压转换器
- 长期积分器
- 采样保持电路
- 峰值检测器
- 医疗仪器
- 工业控制
- 汽车传感器

3 说明

双通道 LMC662 和四通道 LMC660 (LMC66x) 是 CMOS 运算放大器，由单电源供电，并采用 TI 先进的 CMOS 工艺制造。该器件的工作电压范围为 5V 至 15V，除了输入共模范围（包括接地）外，还具有轨到轨输出摆幅。本设计中不存在过去 CMOS 放大器的性能限制问题。输入失调电压 (V_{OS})、失调电压偏移、宽带噪声以及实际负载（2kΩ 和 600Ω）中的电压增益均等于或优于公认的双极等效值。

器件信息

器件型号	通道数	封装(1)
LMC662	双	D（SOIC，8）
		P（PDIP，8）
LMC660	四通道	D（SOIC，8）
		P（PDIP，8）

(1) 如需了解所有可用封装，请参阅节 9。

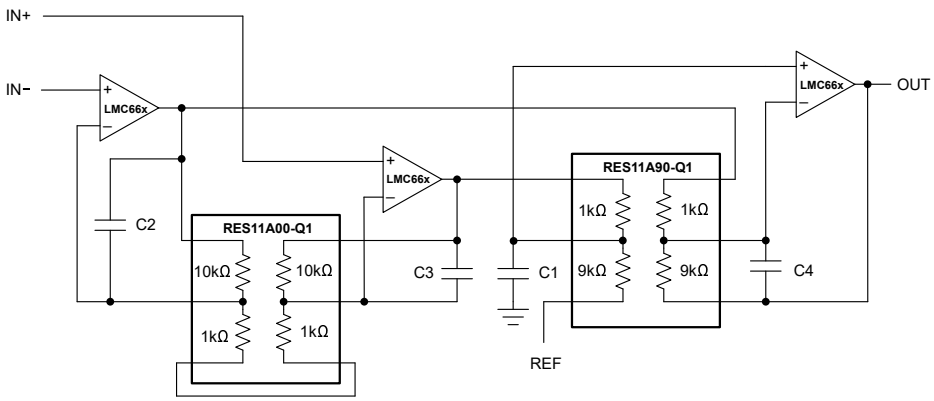

典型应用：仪表放大器和 RES11A

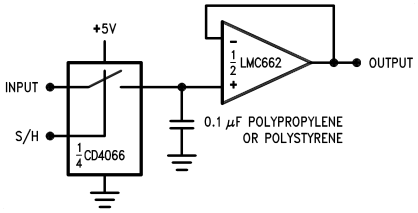

典型应用：低泄漏采样保持

本资源的原文使用英文撰写。为方便起见，TI 提供了译文；由于翻译过程中可能使用了自动化工具，TI 不保证译文的准确性。为确认准确性，请务必访问 ti.com 参考最新的英文版本（控制文档）。

Table of Contents

1 特性 1
2 应用 1
3 说明 1
4 Pin Configuration and Functions 2
5 Specifications 4
5.1 Absolute Maximum Ratings 4
5.2 ESD Ratings 4
5.3 Recommended Operating Conditions 4
5.4 Thermal Information LMC662 5
5.5 Thermal Information LMC660 5
5.6 Electrical Characteristics 6
5.7 Typical Characteristics 10
6 Application and Implementation 13
6.1 Application Information 13
6.2 Typical Applications 16
6.3 Layout 20
7 Device and Documentation Support 23
7.1 接收文档更新通知 23
7.2 支持资源 23
7.3 静电放电警告 23
7.4 术语表 23
8 Revision History 23
9 Mechanical, Packaging, and Orderable Information 24

4 Pin Configuration and Functions

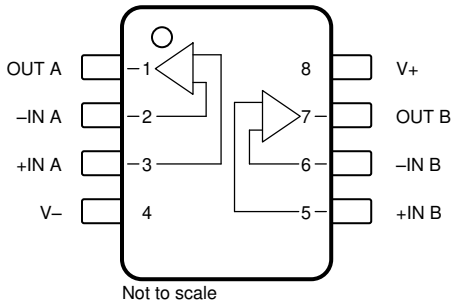

图 4-1. LMC662 D Package, 8-Pin SOIC, and P package, 8-Pin PDIP (Top View)

表 4-1. LMC662 Pin Functions

PIN		TYPE	DESCRIPTION
NAME	NO.		
+IN A	3	Input	Noninverting input, channel A
–IN A	2	Input	Inverting input, channel A
+IN B	5	Input	Noninverting input, channel B
–IN B	6	Input	Inverting input, channel B
OUT A	1	Output	Output, channel A
OUT B	7	Output	Output, channel B
V+	8	Power	Positive (highest) power supply
V–	4	Power	Negative (lowest) power supply

Copyright © 2024 Texas Instruments Incorporated

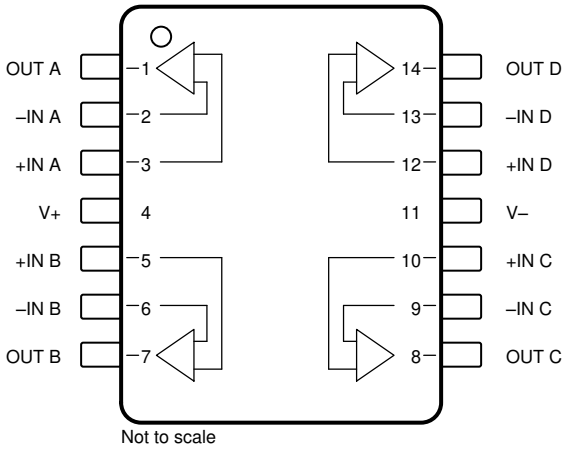

图 4-2. LMC660 D Package, 14-Pin SOIC, and P package, 14-Pin PDIP (Top View)

表 4-2. LMC660 Pin Functions

PIN		TYPE	DESCRIPTION
NAME	NO.		
+IN A	3	Input	Noninverting input, channel A
+IN B	5	Input	Noninverting input, channel B
+IN C	10	Input	Noninverting input, channel C
+IN D	12	Input	Noninverting input, channel D
– IN A	2	Input	Inverting input, channel A
– IN B	6	Input	Inverting input, channel B
– IN C	9	Input	Inverting input, channel C
– IN D	13	Input	Inverting input, channel D
OUT A	1	Output	Output, channel A
OUT B	7	Output	Output, channel B
OUT C	8	Output	Output, channel C
OUT D	14	Output	Output, channel D
V+	4	—	Positive (highest) power supply
V –	11	—	Negative (lowest) power supply

Copyright © 2024 Texas Instruments Incorporated

5 Specifications

5.1 Absolute Maximum Ratings

over operating free-air temperature range (unless otherwise noted)(1) (2)

		MIN	MAX	UNIT
Differential input voltage			±Supply Voltage	V
Supply voltage, V_S = (V+) – (V–)	Single supply	0	16	V
	Dual supply		±8	
Signal input pins	Voltage	(V–) – 0.3	(V+) + 0.3	V
	Current		±5	mA
Output pin current			±18	mA
Output short circuit	To V+	See(3)		
	To V–	See(4)		
Power supply pin	Current		35	mA
Power dissipation		See(5)		
Temperature	Operating, T_A	–40	150	°C
	Junction, T_J		150	
	Storage, T_{stg}	–65	150	
	Lead (soldering, 10 sec.)		260	

(1) Stresses beyond those listed under *Absolute Maximum Ratings* may cause permanent damage to the device. These are stress ratings only, which do not imply functional operation of the device at these or any other conditions beyond those indicated under *Recommended Operating Conditions*. Exposure to absolute-maximum-rated conditions for extended periods may affect device reliability.
(2) If Military/Aerospace specified devices are required, please contact the TI Sales Office/Distributors for availability and specifications.
(3) Do not connect output to V+ when V+ is greater than 13V or reliability will be adversely affected.
(4) Applies to both single-supply and split-supply operation. Continuous short circuit operation at elevated ambient temperature can result in exceeding the maximum allowed junction temperature of 150°C. Output currents in excess of ±30mA over long term may adversely affect reliability.
(5) The maximum power dissipation is a function of $T_{J(max)}$, θ_{JA}, and T_A. The maximum allowable power dissipation at any ambient temperature is $P_D = (T_{J(max)} - T_A) / \theta_{JA}$

5.2 ESD Ratings

			VALUE	UNIT
$V_{(ESD)}$	Electrostatic discharge	Human-body model (HBM), per ANSI/ESDA/JEDEC JS-001(1)	±1000	V

(1) JEDEC document JEP155 states that 500V HBM allows safe manufacturing with a standard ESD control process.

5.3 Recommended Operating Conditions

over operating free-air temperature range (unless otherwise noted)

		MIN	NOM	MAX	UNIT
Supply voltage, V_S = (V+) – (V–)	Single supply	4.75		15.5	V
	Dual supply	±2.375		±7.75	
Temperature range, T_J	LMC66xAI	–40		85	°C
	LMC66xC	0		70	
Power dissipation				See(1)	

(1) For operating at elevated temperatures the device must be derated based on the thermal resistance θ_{JA} with $P_D = (T_J - T_A) / \theta_{JA}$.

Copyright © 2024 Texas Instruments Incorporated

5.4 Thermal Information LMC662

THERMAL METRIC(1)		LMC662		UNIT
		D (SOIC)	P (PDIP)	
		8 PINS	8 PINS	
$R_{\theta JA}$	Junction-to-ambient thermal resistance	165	101	°C/W

(1) For more information about traditional and new thermal metrics, see the *Semiconductor and IC Package Thermal Metrics* application report.

5.5 Thermal Information LMC660

THERMAL METRIC(1)		LMC660		UNIT
		D (SOIC)	P(PDIP)	
		14 PINS	14 PINS	
$R_{\theta JA}$	Junction-to-ambient thermal resistance	115	85	°C/W

(1) For more information about traditional and new thermal metrics, see the *Semiconductor and IC Package Thermal Metrics* application report.

Copyright © 2024 Texas Instruments Incorporated

5.6 Electrical Characteristics

at T_A = +25°C, V_S = 5V (V – = 0V), V_{CM} = 1.5V, V_{OUT} = V_S / 2, and R_L = 1MΩ connected to V_S / 2 (unless otherwise noted)

PARAMETER		TEST CONDITIONS		MIN	TYP	MAX	UNIT
OFFSET VOLTAGE							
V_{OS}	Input offset voltage	LMC66xAI			±1	±3	mV
			T_A = –40°C to +85°C			±3.3	
		LMC66xC			±1	±6	
			T_A = 0°C to 70°C			±6.3	
dV_{OS}/dT	Input offset voltage drift	LMC66xAI	T_A = –40°C to +85°C		±1.3		µV/°C
		LMC66xC	T_A = 0°C to 70°C		±1.3		
PSRR	Power-supply rejection ratio	Positive, 5V ≤ V_S ≤ 15V	LMC66xAI	75	85		dB
			LMC66xAI T_A = –40°C to +85°C	72			
			LMC66xC	66	85		
			LMC66xC T_A = 0°C to 70°C	63			
		Negative, –10V ≤ V_S ≤ 0V	LMC66xAI	84	94		
			LMC66xAI T_A = –40°C to +85°C	81			
			LMC66xC	74	94		
			LMC66xC T_A = 0°C to 70°C	71			
INPUT BIAS CURRENT							
I_B	Input bias current				±2		fA
		LMC66xAI	T_A = –40°C to +85°C			±4	pA
		LMC66xC	T_A = 0°C to 70°C			±2	
I_{OS}	Input offset current				±1		fA
		LMC66xAI	T_A = –40°C to +85°C			±2	pA
		LMC66xC	T_A = 0°C to 70°C			±1	
NOISE							
e_n	Input voltage noise density	f = 1kHz			22		nV/√Hz
i_n	Input current noise density	f = 1kHz			4		fA/√Hz
THD	Total harmonic distortion	f = 10kHz, G = –10V/V, R_L = 2kΩ, V_{OUT} = 8V_{pp}, V_S = 15V			0.2		%
INPUT VOLTAGE							
V_{CM}	Common-mode voltage range	To positive rail, 5V ≤ V_S ≤ 15V, CMRR > 60dB		(V+) – 1.9		(V+) – 2.3	V
			LMC66xAI, T_A = –40°C to +85°C			(V+) – 2.5	
			LMC66xC, T_A = 0°C to 70°C			(V+) – 2.6	
		To negative rail, 5V ≤ V_S ≤ 15V, CMRR > 60dB		(V–) – 0.1	(V–) – 0.4		
			LMC66xAI, T_A = –40°C to +85°C	(V–)			
			LMC66xC, T_A = 0°C to 70°C	(V–)			
CMRR	Common-mode rejection ratio	V_S = 15V, 0V < V_{CM} < 12V	LMC66xAI	75	85		dB
			LMC66xAI, T_A = –40°C to +85°C	72			
			LMC66xC	66	85		
			LMC66xC, T_A = 0°C to 70°C	63			
INPUT IMPEDANCE							
R_{IN}	Input resistance				>1		TΩ

Copyright © 2024 Texas Instruments Incorporated

5.6 Electrical Characteristics（续）

at T_A = +25°C, V_S = 5V (V – = 0V), V_{CM} = 1.5V, V_{OUT} = V_S / 2, and R_L = 1MΩ connected to V_S / 2 (unless otherwise noted)

PARAMETER		TEST CONDITIONS		MIN	TYP	MAX	UNIT
OPEN-LOOP GAIN							
A_{OL}	Open-loop voltage gain	Sourcing, V_S = 15V, V_{CM} = 7.5V, 7.5V < V_O < 11.5V, R_L = 2kΩ	LMC66xAI	440	2000		V/mV
			LMC66xAI, T_A = –40°C to +85°C	400			
			LMC66xC	300	2000		
			LMC66xC, T_A = 0°C to 70°C	200			
		Sinking, V_S = 15V, V_{CM} = 7.5V, 2.5V < V_O < 7.5V, R_L = 2kΩ	LMC66xAI	180	500		
			LMC66xAI, T_A = –40°C to +85°C	120			
			LMC66xC	90	500		
			LMC66xC, T_A = 0°C to 70°C	80			
		Sourcing, V_S = 15V, V_{CM} = 7.5V, 7.5V < V_O < 11.5V, R_L = 600Ω	LMC66xAI	220	1000		
			LMC66xAI, T_A = –40°C to +85°C	200			
			LMC66xC	150	1000		
			LMC66xC, T_A = 0°C to 70°C	100			
		Sinking, V_S = 15V, V_{CM} = 7.5V, 2.5V < V_O < 7.5V, R_L = 600Ω	LMC66xAI	100	250		
			LMC66xAI, T_A = –40°C to +85°C	60			
			LMC66xC	50	250		
			LMC66xC, T_A = 0°C to 70°C	40			
FREQUENCY RESPONSE							
GBW	Gain bandwidth product				1.4		MHz
SR	Slew rate(2)	V_S = 15V, 10V step			1.1		V/µs
			LMC66xAI, T_A = –40°C to +85°C	0.6			
			LMC66xC, T_A = 0°C to 70°C	0.7			
θ_m	Phase margin				50		°
	Crosstalk	Dual and quad channel, V_S = 15V, R_L = 100kΩ to 7.5V, f = 1kHz, V_{OUT} = 12V_{pp}			130		dB

Copyright © 2024 Texas Instruments Incorporated

5.6 Electrical Characteristics（续）

at T_A = +25°C, V_S = 5V (V– = 0V), V_{CM} = 1.5V, V_{OUT} = V_S / 2, and R_L = 1MΩ connected to V_S / 2 (unless otherwise noted)

PARAMETER		TEST CONDITIONS		MIN	TYP	MAX	UNIT
OUTPUT							
V_O	Voltage output swing	Positive rail, V_S = 5V, R_L = 2kΩ	LMC66xAI	4.82	4.87		V
			LMC66xAI, T_A = –40°C to +85°C	4.79			
			LMC66xC	4.78	4.87		
			LMC66xC, T_A = 0°C to 70°C	4.76			
		Negative rail, V_S = 5V, R_L = 2kΩ	LMC66xAI		0.10	0.15	
			LMC66xAI, T_A = –40°C to +85°C			0.17	
			LMC66xC		0.10	0.19	
			LMC66xC, T_A = 0°C to 70°C			0.21	
		Positive rail, V_S = 5V, R_L = 600Ω	LMC66xAI	4.41	4.61		
			LMC66xAI, T_A = –40°C to +85°C	4.31			
			LMC66xC	4.27	4.61		
			LMC66xC, T_A = 0°C to 70°C	4.21			
		Negative rail, V_S = 5V, R_L = 600Ω	LMC66xAI		0.30	0.50	
			LMC66xAI, T_A = –40°C to +85°C			0.56	
			LMC66xC		0.30	0.63	
			LMC66xC, T_A = 0°C to 70°C			0.69	
		Positive rail, V_S = 15V, R_L = 2kΩ	LMC66xAI	14.50	14.63		
			LMC66xAI, T_A = –40°C to +85°C	14.44			
			LMC66xC	14.37	14.63		
			LMC66xC, T_A = 0°C to 70°C	14.32			
		Negative rail, V_S = 15V, R_L = 2kΩ	LMC66xAI		0.26	0.35	
			LMC66xAI, T_A = –40°C to +85°C			0.40	
			LMC66xC		0.26	0.44	
			LMC66xC, T_A = 0°C to 70°C			0.48	
		Positive rail, V_S = 15V, R_L = 600Ω	LMC66xAI	13.35	13.90		
			LMC66xAI, T_A = –40°C to +85°C	13.15			
			LMC66xC	12.92	13.90		
			LMC66xC, T_A = 0°C to 70°C	12.76			
		Negative rail, V_S = 15V, R_L = 600Ω	LMC66xAI		0.79	1.16	
			LMC66xAI, T_A = –40°C to +85°C			1.32	
			LMC66xC		0.79	1.45	
			LMC66xC, T_A = 0°C to 70°C			1.58	

Copyright © 2024 Texas Instruments Incorporated

5.6 Electrical Characteristics（续）

at T_A = +25°C, V_S = 5V (V – = 0V), V_{CM} = 1.5V, V_{OUT} = V_S / 2, and R_L = 1MΩ connected to V_S / 2 (unless otherwise noted)

PARAMETER		TEST CONDITIONS		MIN	TYP	MAX	UNIT
I_{SC}	Short-circuit current	Sourcing, V_S = 5V, V_{OUT} = 0V	LMC66xAI	16	22		mA
			LMC66xAI, T_A = –40°C to +85°C	14			
			LMC66xC	13	22		
			LMC66xC, T_A = 0°C to 70°C	11			
		Sinking, V_S = 5V, V_{OUT} = 13V	LMC66xAI	16	21		
			LMC66xAI, T_A = –40°C to +85°C	14			
			LMC66xC	13	21		
			LMC66xC, T_A = 0°C to 70°C	11			
		Sourcing, V_S = 15V, V_{OUT} = 0V	LMC66xAI	28	40		
			LMC66xAI, T_A = –40°C to +85°C	25			
			LMC66xC	23	40		
			LMC66xC, T_A = 0°C to 70°C	21			
		Sinking, V_S = 15V, V_{OUT} = 13V(1)	LMC66xAI	28	39		
			LMC66xAI, T_A = –40°C to +85°C	24			
			LMC66xC	23	39		
			LMC66xC, T_A = 0°C to 70°C	20			
POWER SUPPLY							
I_Q	Quiescent current per amplifier	LMC662 V_{OUT} = 7.5V, V_S = 15V	LMC662AI		375	650	μA
			LMC662AI, T_A = –40°C to +85°C			750	
			LMC662C		375	800	
			LMC662C, T_A = 0°C to 70°C			900	
		LMC660 V_{OUT} = 7.5V, V_S = 15V	LMC660AI		375	550	
			LMC660AI, T_A = –40°C to +85°C			650	
			LMC660C		375	675	
			LMC660C, T_A = 0°C to 70°C			725	

(1) Do not connect output to V+ when V+ is greater than 13V or reliability can be adversely affected.
(2) Specification limit established from device population bench system measurements across multiple lots. Number specified is the slower of the positive and negative slew rates.

Copyright © 2024 Texas Instruments Incorporated

5.7 Typical Characteristics

at T_A = 25°C, V_S = ±7.5V, V_{OUT} = mid-supply, $R_L \geqslant 1M\Omega$ (unless otherwise specified)

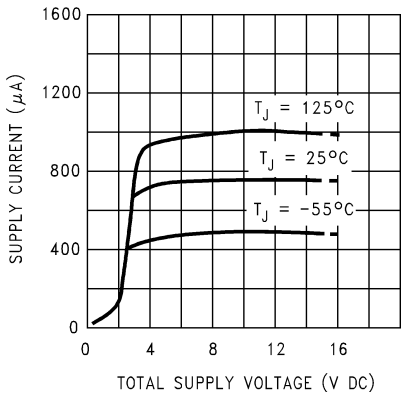

图 5-1. Supply Current vs Supply Voltage

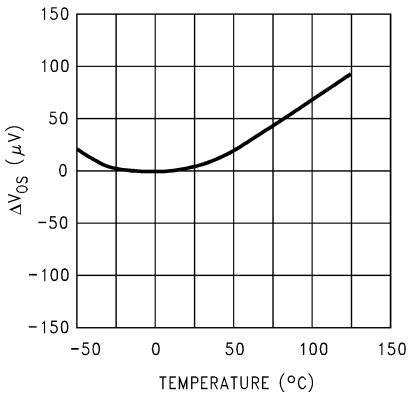

图 5-2. Offset Voltage

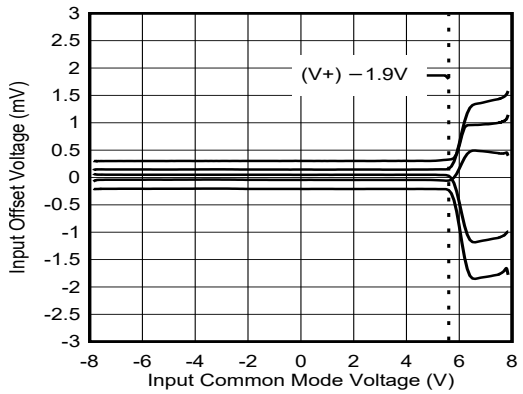

图 5-3. Offset Voltage vs Common-Mode Voltage

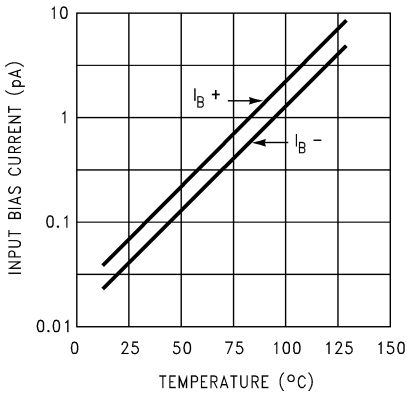

图 5-4. Input Bias Current

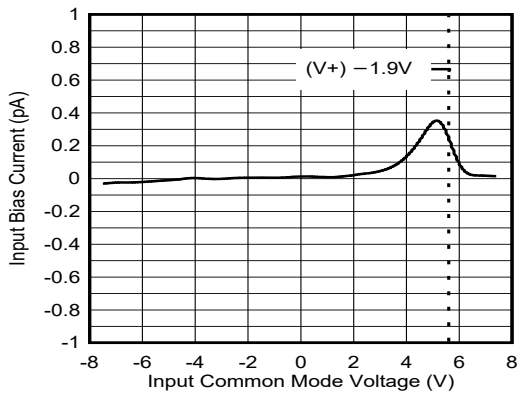

图 5-5. Input Bias Current vs Input Common-Mode Voltage

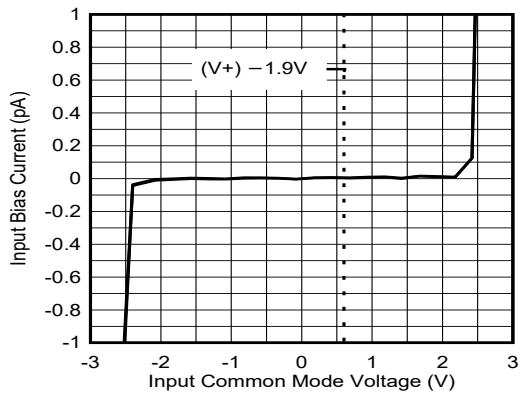

V_S = ±2.5V

图 5-6. Input Bias Current vs Input Common-Mode Voltage

Copyright © 2024 Texas Instruments Incorporated

5.7 Typical Characteristics (continued)

at T_A = 25°C, V_S = ±7.5V, V_{OUT} = mid-supply, $R_L \geqslant 1M\Omega$ (unless otherwise specified)

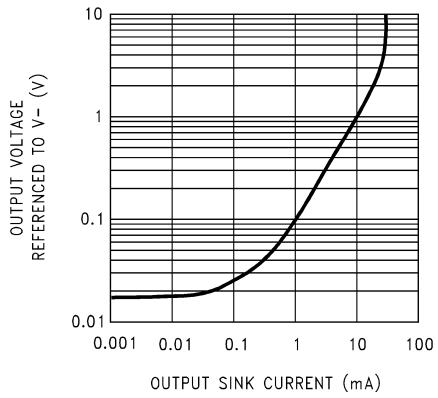

图 5-7. Output Characteristics Current Sinking

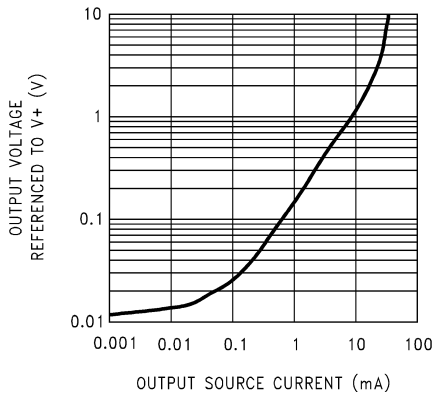

图 5-8. Output Characteristics Current Sourcing

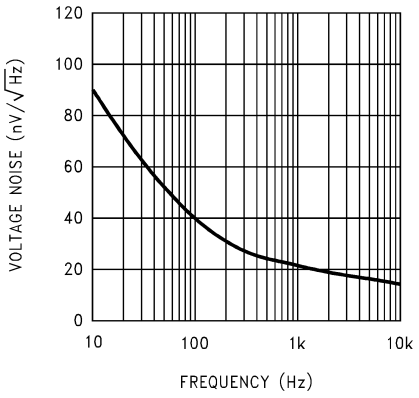

图 5-9. Input Voltage Noise vs Frequency

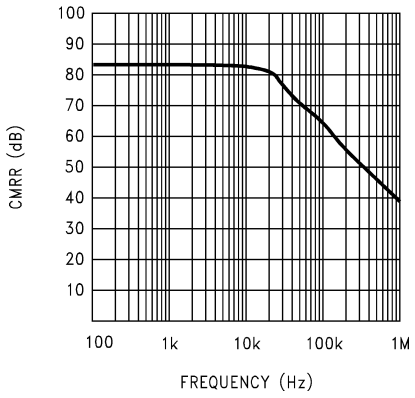

图 5-10. CMRR vs Frequency

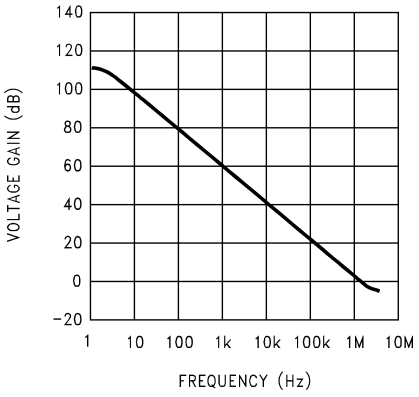

图 5-11. Open-Loop Frequency Response

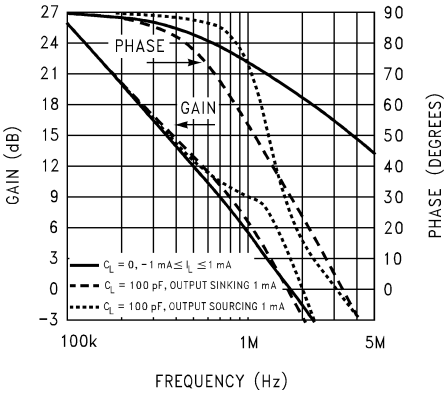

图 5-12. Frequency Response vs Capacitive Load

Copyright © 2024 Texas Instruments Incorporated

5.7 Typical Characteristics (continued)

at T_A = 25°C, V_S = ±7.5V, V_{OUT} = mid-supply, $R_L \geqslant 1M\Omega$ (unless otherwise specified)

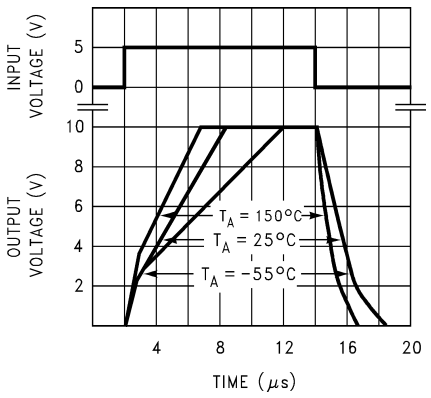

图 5-13. Noninverting Large-Signal Pulse Response

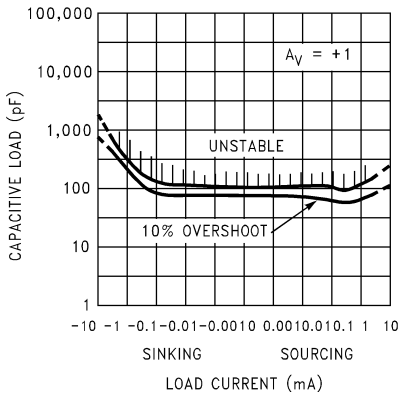

Avoid resistive loads < 500 Ω because of possible instability

图 5-14. Stability vs Capacitive Load

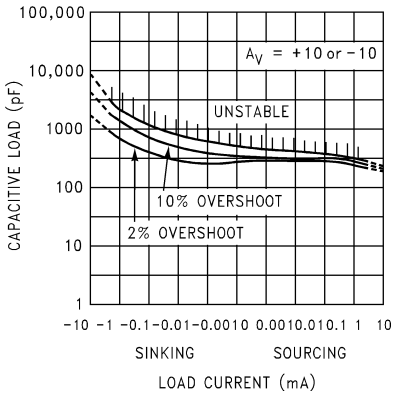

Avoid resistive loads < 500 Ω because of possible instability

图 5-15. Stability vs Capacitive Load

Copyright © 2024 Texas Instruments Incorporated

6 Application and Implementation

备注

以下应用部分中的信息不属于 TI 器件规格的范围，TI 不担保其准确性和完整性。TI 的客 户应负责确定器件是否适用于其应用。客户应验证并测试其设计，以确保系统功能。

6.1 Application Information

6.1.1 Amplifier Topology

The topology chosen for the LMC66x, shown in 图 6-1, is unconventional compared to general-purpose op amps. The LMC66x incorporates novel op amp design that enables a wide input common-mode range and rail to rail output swing even when driving a large load. The input common-mode range includes ground, making the LMC66x an excellent choice for single supply applications. While the LMC66x supports both a wide supply and common-mode voltage range, large input common-mode voltage can cause an increase in input bias current.

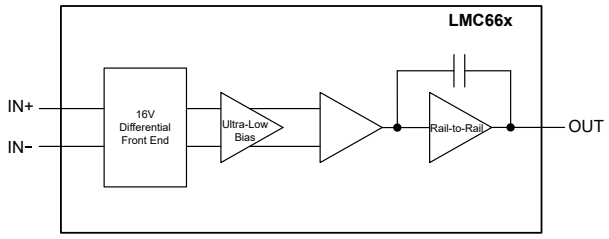

图 6-1. LMC66x Circuit Topology (Each Amplifier)

The large signal voltage gain while sourcing is comparable to traditional bipolar op amps, even with a 600 Ω load. The gain while sinking is higher than most CMOS op amps, due to the additional gain stage; however, under heavy load (600 Ω) the gain is reduced as indicated in the *Electrical Characteristics*.

6.1.2 Compensating Input Capacitance

The high input resistance of the LMC66x op amps allows the use of large feedback and source resistor values without losing gain accuracy due to loading. However, the circuit can be especially sensitive to the layout when these large-value resistors are used.

Every amplifier has some capacitance between each input and ac ground, and also some differential capacitance between the inputs. When the feedback network around an amplifier is resistive, this input capacitance (along with any additional capacitance due to circuit board traces, the socket, and so on) and the feedback resistors create a pole in the feedback path. In 图 6-2, the frequency of this pole is:

$$f_p = \frac{1}{2\pi R_P C_S} \quad (1)$$

where

- C_S is the total capacitance at the inverting input, including amplifier input capacitance and any stray capacitance from the IC socket (if one is used), circuit board traces, and so on.
- R_P is the parallel combination of R_F and R_{IN}.

This formula, as well as the next formula, apply to inverting and noninverting op amp configurations.

When the feedback resistors are smaller than a few kΩ , the frequency of the feedback pole can be quite high, because C_S is generally less than 10pF. If the frequency of the feedback pole is much greater than the *ideal* closed-loop bandwidth (the nominal closed-loop bandwidth in the absence of C_S), the pole can have a negligible effect on stability, as only a small amount of phase shift is added.

Copyright © 2024 Texas Instruments Incorporated

However, if the feedback pole is less than approximately 6 to 10 times the *ideal* −3dB frequency, connect a feedback capacitor, C_F, between the output and the inverting input of the op amp. This condition can also be stated in terms of the amplifier low-frequency noise gain. To maintain stability, a feedback capacitor is probably be needed if:

$$\left(\frac{R_F}{R_{IN}} + 1\right) \leq \sqrt{6 \times 2\pi \times GBW \times R_F \times C_S} \tag{2}$$

where

$\left(\frac{R_F}{R_{IN}} + 1\right)$ is the amplifier low-frequency noise gain and GBW is the amplifier gain bandwidth product. An amplifier low-frequency noise gain is represented by the following formula, regardless of whether the amplifier is being used in an inverting or noninverting mode:

$$\left(\frac{R_F}{R_{IN}} + 1\right) \tag{3}$$

A feedback capacitor is more likely to be needed when the noise gain is low, the feedback resistor is large, or both.

If the previous condition is met (indicating that a feedback capacitor is probably needed), and the noise gain is large enough that:

$$\left(\frac{R_F}{R_{IN}} + 1\right) \leq 2\sqrt{GBW \times R_F \times C_S} \tag{4}$$

the following value of feedback capacitor is recommended:

$$C_F = \frac{C_S}{2\left(\frac{R_F}{R_{IN}} + 1\right)} \tag{5}$$

If $\left(\frac{R_F}{R_{IN}} + 1\right) < 2\sqrt{GBW \times R_F \times C_S}$, then set the feedback capacitor to:

$$C_F = \sqrt{\frac{C_S}{GBW \times R_F}} \tag{6}$$

These capacitor values are usually significantly smaller than those given by the older, more conservative formula:

$$C_F = \frac{C_S R_{IN}}{R_F} \tag{7}$$

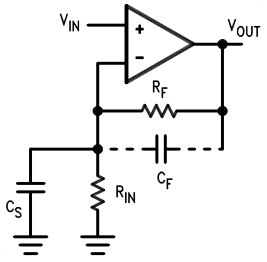

C_S consists of the amplifier input capacitance plus any stray capacitance from the circuit board and socket. C_F compensates for the pole caused by C_S and the feedback resistor.

图 6-2. General Operational Amplifier Circuit

Copyright © 2024 Texas Instruments Incorporated

Using the smaller capacitors provides much higher bandwidth with little degradation of transient response. In any of the previous cases, the use a somewhat larger feedback capacitor can be necessary to allow for unexpected stray capacitance, or to tolerate additional phase shifts in the loop, or excessive capacitive load, or to decrease the noise or bandwidth, or simply because the particular circuit implementation needs more feedback capacitance to be sufficiently stable. For example, a printed circuit board (PCB) stray capacitance can be larger or smaller than the breadboard stray capacitance, so the actual preferred value for C_F can be different from the one estimated using the breadboard. In most cases, check the value of C_F on the actual circuit, starting with the computed value.

6.1.3 Capacitive Load Tolerance

Like many other op amps, the LMC66x can oscillate when the applied load appears capacitive. The threshold of oscillation varies both with load and circuit gain. The configuration most sensitive to oscillation is a unity-gain follower. See also 节 5.7.

The load capacitance interacts with the op amp output resistance to create an additional pole. If this pole frequency is sufficiently low, the pole can degrade the op amp phase margin so that the amplifier is no longer stable at low gains. 图 6-3 shows that the addition of a small resistor (50 Ω to 100 Ω) in series with the op amp output, and a capacitor (5pF to 10pF) from inverting input to output pins, returns the phase margin to a safe value without interfering with lower-frequency circuit operation. Thus, larger values of capacitance can be tolerated without oscillation. In all cases, the output can ring heavily when the load capacitance is near the threshold for oscillation.

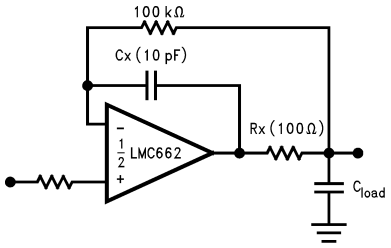

图 6-3. Rx, Cx Improve Capacitive Load Tolerance

Capacitive load driving capability is enhanced by using a pullup resistor to V+, as in 图 6-4. Typically, a pullup resistor conducting 500 μA or more significantly improves capacitive load responses. The value of the pullup resistor must be determined based on the current sinking capability of the amplifier with respect to the desired output swing. The open-loop gain of the amplifier can also be affected by the pullup resistor (see the *Electrical Characteristics*).

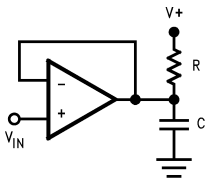

图 6-4. Compensating for Large Capacitive Loads With a Pullup Resistor

Copyright © 2024 Texas Instruments Incorporated

6.1.4 Bias Current Testing

The test method of 图 6-5 is appropriate for bench-testing bias current with reasonable accuracy. To understand the circuit operation, first close switch S2 momentarily. When S2 is opened, then:

$$I_{b-} = \frac{dV_{OUT}}{dt} \times C_2 \tag{8}$$

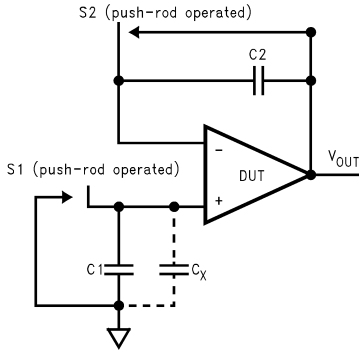

图 6-5. Simple Input Bias Current Test Circuit

A recommended capacitor for C_2 is a 5pF or 10pF silver mica, NPO ceramic, or air-dielectric. When determining the magnitude of I_b-, take into account the leakage of the capacitor and socket. Leave switch S2 shorted most of the time, or else the dielectric absorption of the capacitor C_2 can cause errors.

Similarly, if S1 is shorted momentarily (while leaving S2 shorted):

$$I_{b+} = \frac{dV_{OUT}}{dt} \times (C_1 + C_x) \tag{9}$$

where C_x is the stray capacitance at the noninverting input.

6.2 Typical Applications

Additional single-supply applications ideas can be found in the LM358 data sheet. The LMC66x is pin-for-pin compatible with the LM358 and offers greater bandwidth and input resistance over the LM358. These features can improve the performance of many existing single-supply applications. Be aware, however, that the supply voltage range of the LM662 is smaller than that of the LM358.

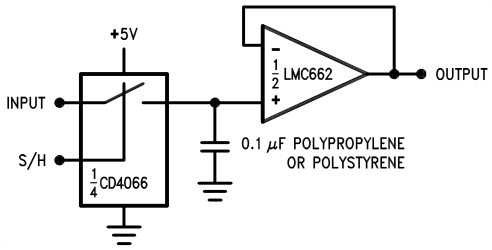

图 6-6. Low Leakage Sample and Hold

Copyright © 2024 Texas Instruments Incorporated

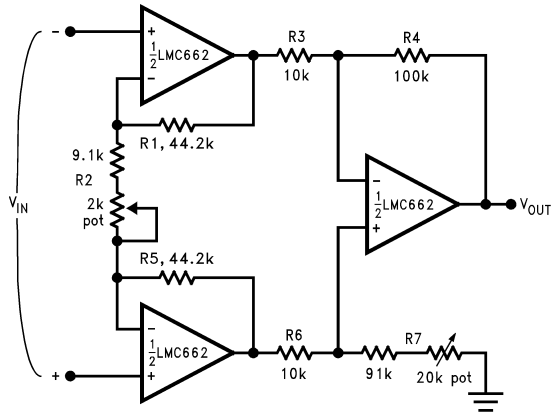

If $R_1 = R_5$, $R_3 = R_6$, and $R_4 = R_7$; then

$$\frac{V_{OUT}}{V_{IN}} = \frac{R2 + 2R1}{R2} \times \frac{R4}{R3}$$

$\therefore A_V \approx 100$ for circuit shown.

图 6-7. Instrumentation Amplifier

Use low drift resistors for good CMRR performance over temperature. Matching of R3 to R6 and R4 to R7 affects CMRR. Gain can be adjusted through R2. CMRR can be adjusted through R7. An improved circuit can be designed using the RES11A-Q1, low drift, precision matched resistor pairs. A precise gain of 99 is easily implemented as shown in 图 6-8.

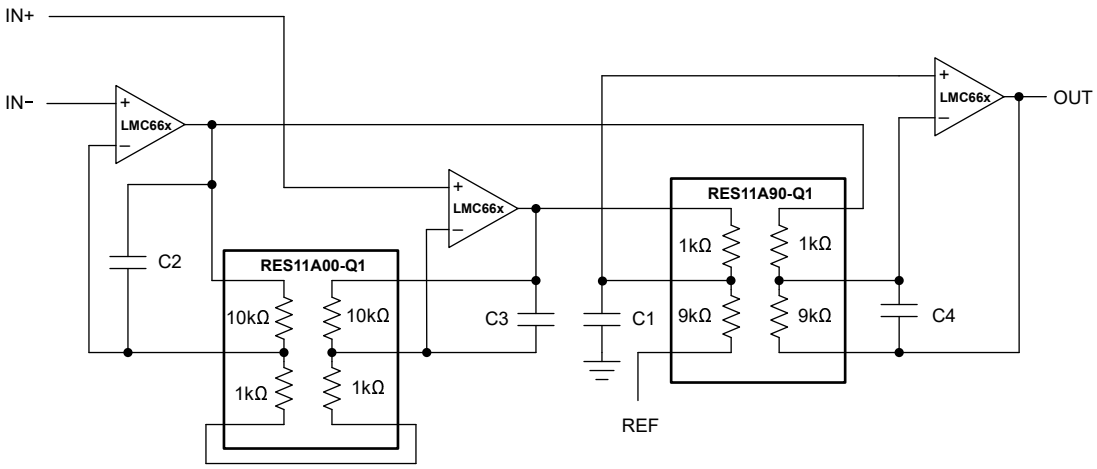

图 6-8. Improved Instrumentation Amplifier With the RES11A

Copyright © 2024 Texas Instruments Incorporated

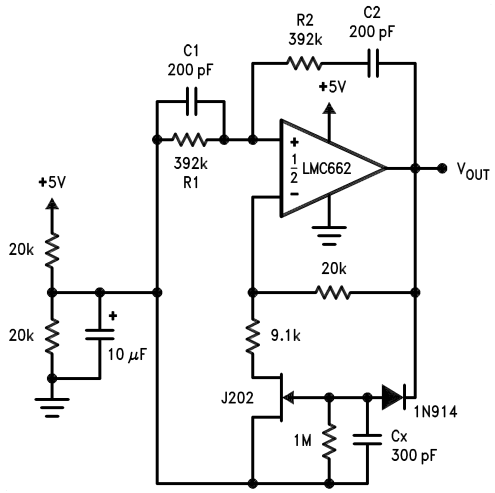

Oscillator frequency is determined by R1, R2, C1, and C2:

$f_{OSC} = 1/2\pi RC$

where R = R1 = R2 and C = C1 = C2.

图 6-9. Sine-Wave Oscillator

This circuit, as shown, oscillates at 2.0kHz with a peak-to-peak output swing of 4.5V.

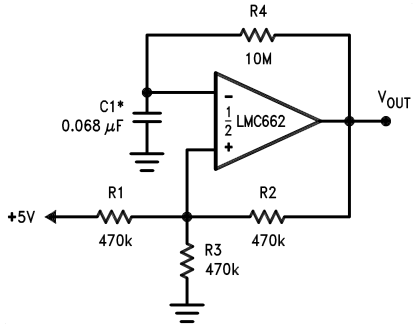

图 6-10. 1Hz Square-Wave Oscillator

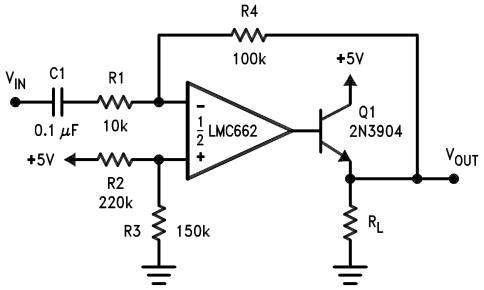

图 6-11. Power Amplifier

Copyright © 2024 Texas Instruments Incorporated

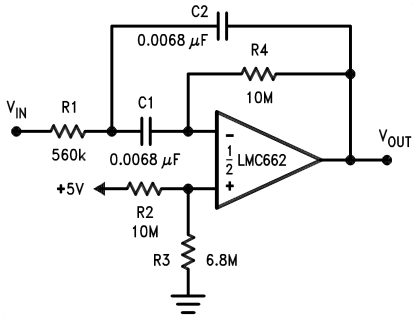

f_O = 10Hz, Q = 2.1, gain = −8.8

图 6-12. 10Hz Band-Pass Filter

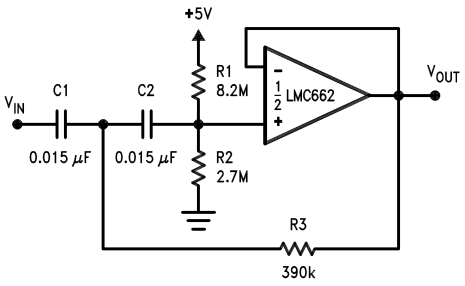

f_c = 10Hz, d = 0.895, gain = 1, 2dB pass-band ripple

图 6-13. 10Hz High-Pass Filter

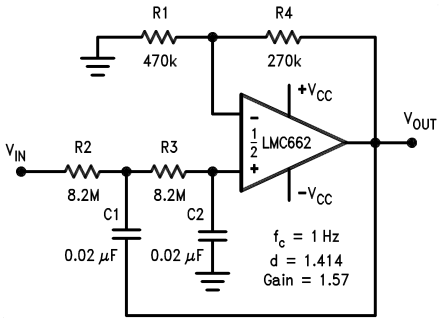

图 6-14. 1Hz Low Pass Filter (Maximally Flat, Dual Supply Only)

Copyright © 2024 Texas Instruments Incorporated

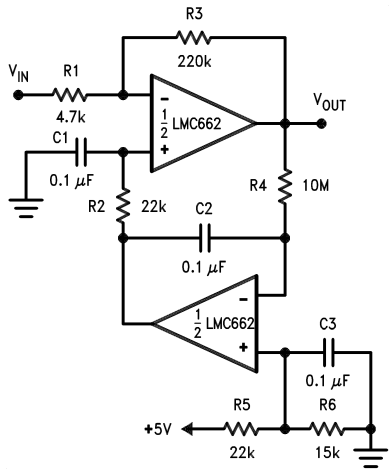

Gain = −46.8 Output offset voltage reduced to the level of the input offset voltage of the bottom amplifier (typically 1mV).

图 6-15. High Gain Amplifier with Offset Voltage Reduction

6.3 Layout

6.3.1 Layout Guidelines

6.3.1.1 Printed Circuit Board Layout for High-Impedance Work

Generally, any circuit that operates with less than 1000pA of leakage current requires special layout of the printed circuit board (PCB). To take advantage of the ultra-low bias current of the LMC66x, typically less than 40fA, an excellent layout is essential. Fortunately, the techniques for obtaining low leakages are quite simple. First, do not ignore the surface leakage of the PCB, even though the leakage can sometimes appear acceptably low, because under conditions of high humidity or dust or contamination, the surface leakage can be appreciable.

To minimize the effect of any surface leakage, lay out a ring of foil completely surrounding the LMC66x inputs and the terminals of capacitors, diodes, conductors, resistors, relay terminals, and so on, connected to the op amp inputs. See 图 6-16. To have a significant effect, place guard rings on both the top and bottom of the PCB. This PCB foil must then be connected to a voltage that is at the same voltage as the amplifier inputs, because no leakage current can flow between two points at the same potential. For example, a PCB trace-to-pad resistance of $10^{12}\,\Omega$, which is normally considered a very large resistance, can leak 5pA if the trace were a 5V bus adjacent to the pad of an input. The leakage causes a 100 times degradation from the LMC66x actual performance. However, if a guard ring is held within 5mV of the inputs, then even a resistance of $10^{11}\,\Omega$ causes only 50fA of leakage current, or perhaps a minor (2:1) degradation of the amplifier performance. See 图 6-17, 图 6-18, and 图 6-19 for typical connections of guard rings for standard op amp configurations. If both inputs are active and at high impedance, the guard can be tied to ground and still provide some protection; see 图 6-20.

Copyright © 2024 Texas Instruments Incorporated

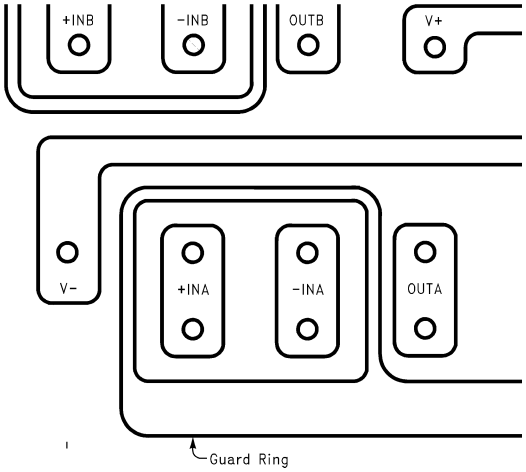

图 6-16. Example, Using the LMC660, of Guard Ring in PCB Layout

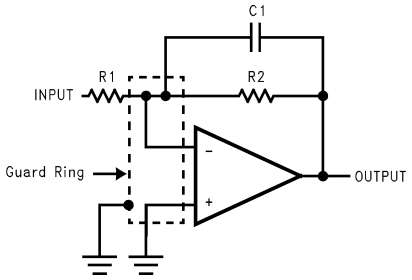

图 6-17. Guard Ring Connections: Inverting Amplifier

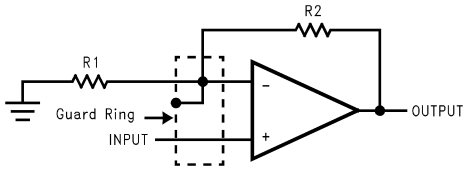

图 6-18. Guard Ring Connections: Non-Inverting Amplifier

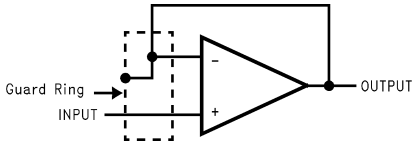

图 6-19. Guard Ring Connections: Follower

Copyright © 2024 Texas Instruments Incorporated

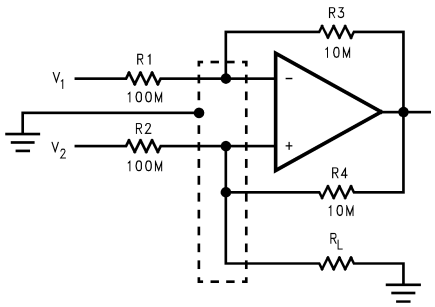

图 6-20. Guard Ring Connections: Howland Current Pump

Be aware that when laying out a PCB for the sake of just a few circuits is inappropriate, there is another technique that is even better than a guard ring on a PCB. Do not insert the amplifier input pin into the board at all; instead, bend the pin up in the air and use only air as an insulator because air is an excellent insulator. In this case, some of the advantages of PCB construction are lost, but the advantages of air are sometimes well worth the effort of using point-to-point up-in-the-air wiring. See also 图 6-21.

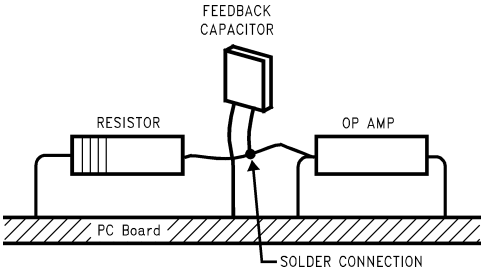

Input pins are lifted out of PCB and soldered directly to components. All other pins connected to PCB.

图 6-21. Air Wiring

Copyright © 2024 Texas Instruments Incorporated

7 Device and Documentation Support

TI offers an extensive line of development tools. Tools and software to evaluate the performance of the device, generate code, and develop solutions are listed below.

7.1 接收文档更新通知

要接收文档更新通知，请导航至 ti.com 上的器件产品文件夹。点击*通知* 进行注册，即可每周接收产品信息更改摘要。有关更改的详细信息，请查看任何已修订文档中包含的修订历史记录。

7.2 支持资源

TI E2E™ 中文支持论坛是工程师的重要参考资料，可直接从专家处获得快速、经过验证的解答和设计帮助。搜索现有解答或提出自己的问题，获得所需的快速设计帮助。

链接的内容由各个贡献者“按原样”提供。这些内容并不构成 TI 技术规范，并且不一定反映 TI 的观点；请参阅 TI 的使用条款。

Trademarks

TI E2E™ is a trademark of Texas Instruments.
所有商标均为其各自所有者的财产。

7.3 静电放电警告



静电放电 (ESD) 会损坏这个集成电路。德州仪器 (TI) 建议通过适当的预防措施处理所有集成电路。如果不遵守正确的处理和安装程序，可能会损坏集成电路。

ESD 的损坏小至导致微小的性能降级，大至整个器件故障。精密的集成电路可能更容易受到损坏，这是因为非常细微的参数更改都可能会导致器件与其发布的规格不相符。

7.4 术语表

TI 术语表　　本术语表列出并解释了术语、首字母缩略词和定义。

8 Revision History

注：以前版本的页码可能与当前版本的页码不同

Changes from Revision C (March 2013) to Revision D (February 2024)	Page
• 添加了四通道 LMC660 器件及相关内容	1
• 在*特性* 中删除了低失真并添加了低噪声	1
• 更新了*说明* 中的描述文本	1
• Updated pin configuration diagram and added pin functions table	2
• Added *Thermal Information*	5
• Changed separate DC and AC *Electrical Characteristics* into single *Electrical Characteristics*	6
• Changed parameter names to conform to new standards in *Electrical Characteristics*	6
• Changed input current noise density from 0.0002pA/ $\sqrt{Hz}$ to 4fA/ $\sqrt{Hz}$ to align with modern noise test setup	6
• Changed total harmonic distortion specification from 0.01% to 0.2% in *Electrical Characteristics*	6
• Added footnote detailing how slew rate minimum specification is specified in *Electrical Characteristics*	6
• Added *Offset Voltage vs Input Common-Mode Voltage* and *Input Bias vs Common-Mode Voltage* curves	10
• Updated section text and circuit topology diagram in *Amplifier Topology*	13
• Added instrumentation amplifier circuit with RES11A in *Typical Single Supply Applications*	16

Copyright © 2024 Texas Instruments Incorporated

Changes from Revision B (March 2013) to Revision C (March 2013)	Page
• Changed layout of National Data Sheet to TI format	16

9 Mechanical, Packaging, and Orderable Information

The following pages include mechanical, packaging, and orderable information. This information is the most current data available for the designated devices. This data is subject to change without notice and revision of this document. For browser-based versions of this data sheet, refer to the left-hand navigation.

Copyright © 2024 Texas Instruments Incorporated

PACKAGING INFORMATION

Orderable part number	Status (1)	Material type (2)	Package | Pins	Package qty | Carrier	RoHS (3)	Lead finish/ Ball material (4)	MSL rating/ Peak reflow (5)	Op temp (°C)	Part marking (6)
LMC660AIM/NOPB	Obsolete	Production	SOIC (D) | 14	-	-	Call TI	Call TI	-40 to 85	LMC660AIM
LMC660AIMX/NOPB	Active	Production	SOIC (D) | 14	2500 | LARGE T&R	Yes	NIPDAU | SN	Level-1-260C-UNLIM	-40 to 85	LMC660AIM
LMC660AIMX/NOPB.A	Active	Production	SOIC (D) | 14	2500 | LARGE T&R	Yes	NIPDAU	Level-1-260C-UNLIM	-40 to 85	LMC660AIM
LMC660AIMX/NOPB.B	Active	Production	SOIC (D) | 14	2500 | LARGE T&R	Yes	NIPDAU	Level-1-260C-UNLIM	-40 to 85	LMC660AIM
LMC660AIN/NOPB	Obsolete	Production	PDIP (N) | 14	-	-	Call TI	Call TI	-40 to 85	LMC660AIN
LMC660CM/NOPB	Obsolete	Production	SOIC (D) | 14	-	-	Call TI	Call TI	0 to 70	LMC660CM
LMC660CMX/NOPB	Active	Production	SOIC (D) | 14	2500 | LARGE T&R	Yes	NIPDAU	Level-1-260C-UNLIM	0 to 70	LMC660CM
LMC660CMX/NOPB.A	Active	Production	SOIC (D) | 14	2500 | LARGE T&R	Yes	NIPDAU	Level-1-260C-UNLIM	0 to 70	LMC660CM
LMC660CMX/NOPB.B	Active	Production	SOIC (D) | 14	2500 | LARGE T&R	Yes	NIPDAU	Level-1-260C-UNLIM	0 to 70	LMC660CM
LMC660CN/NOPB	Obsolete	Production	PDIP (N) | 14	-	-	Call TI	Call TI	0 to 70	LMC660CN
LMC662AIMX/NOPB	Active	Production	SOIC (D) | 8	2500 | LARGE T&R	Yes	NIPDAU | SN	Level-1-260C-UNLIM	-40 to 85	LMC66 2AIM
LMC662AIMX/NOPB.A	Active	Production	SOIC (D) | 8	2500 | LARGE T&R	Yes	NIPDAU	Level-1-260C-UNLIM	-40 to 85	LMC66 2AIM
LMC662AIN/NOPB	Active	Production	PDIP (P) | 8	40 | TUBE	Yes	NIPDAU	Level-1-NA-UNLIM	-40 to 85	LMC 662AIN
LMC662AIN/NOPB.A	Active	Production	PDIP (P) | 8	40 | TUBE	Yes	NIPDAU	Level-1-NA-UNLIM	-40 to 85	LMC 662AIN
LMC662AIN/NOPB.B	Active	Production	PDIP (P) | 8	40 | TUBE	Yes	NIPDAU	Level-1-NA-UNLIM	-40 to 85	LMC 662AIN
LMC662CM/NOPB	Obsolete	Production	SOIC (D) | 8	-	-	Call TI	Call TI	0 to 70	LMC66 2CM
LMC662CMX/NOPB	Active	Production	SOIC (D) | 8	2500 | LARGE T&R	Yes	NIPDAU | SN	Level-1-260C-UNLIM	0 to 70	LMC66 2CM
LMC662CMX/NOPB.A	Active	Production	SOIC (D) | 8	2500 | LARGE T&R	Yes	NIPDAU	Level-1-260C-UNLIM	0 to 70	LMC66 2CM
LMC662CMX/NOPB.B	Active	Production	SOIC (D) | 8	2500 | LARGE T&R	Yes	NIPDAU	Level-1-260C-UNLIM	0 to 70	LMC66 2CM
LMC662CN/NOPB	Active	Production	PDIP (P) | 8	40 | TUBE	Yes	NIPDAU	Level-1-NA-UNLIM	0 to 70	LMC 662CN
LMC662CN/NOPB.A	Active	Production	PDIP (P) | 8	40 | TUBE	Yes	NIPDAU	Level-1-NA-UNLIM	0 to 70	LMC 662CN

Orderable part number	Status (1)	Material type (2)	Package | Pins	Package qty | Carrier	RoHS (3)	Lead finish/ Ball material (4)	MSL rating/ Peak reflow (5)	Op temp (°C)	Part marking (6)
LMC662CN/NOPB.B	Active	Production	PDIP (P) | 8	40 | TUBE	Yes	NIPDAU	Level-1-NA-UNLIM	0 to 70	LMC 662CN

(1) **Status:** For more details on status, see our product life cycle.

(2) **Material type:** When designated, preproduction parts are prototypes/experimental devices, and are not yet approved or released for full production. Testing and final process, including without limitation quality assurance, reliability performance testing, and/or process qualification, may not yet be complete, and this item is subject to further changes or possible discontinuation. If available for ordering, purchases will be subject to an additional waiver at checkout, and are intended for early internal evaluation purposes only. These items are sold without warranties of any kind.

(3) **RoHS values:** Yes, No, RoHS Exempt. See the TI RoHS Statement for additional information and value definition.

(4) **Lead finish/Ball material:** Parts may have multiple material finish options. Finish options are separated by a vertical ruled line. Lead finish/Ball material values may wrap to two lines if the finish value exceeds the maximum column width.

(5) **MSL rating/Peak reflow:** The moisture sensitivity level ratings and peak solder (reflow) temperatures. In the event that a part has multiple moisture sensitivity ratings, only the lowest level per JEDEC standards is shown. Refer to the shipping label for the actual reflow temperature that will be used to mount the part to the printed circuit board.

(6) **Part marking:** There may be an additional marking, which relates to the logo, the lot trace code information, or the environmental category of the part.

Multiple part markings will be inside parentheses. Only one part marking contained in parentheses and separated by a "~" will appear on a part. If a line is indented then it is a continuation of the previous line and the two combined represent the entire part marking for that device.

Important Information and Disclaimer: The information provided on this page represents TI's knowledge and belief as of the date that it is provided. TI bases its knowledge and belief on information provided by third parties, and makes no representation or warranty as to the accuracy of such information. Efforts are underway to better integrate information from third parties. TI has taken and continues to take reasonable steps to provide representative and accurate information but may not have conducted destructive testing or chemical analysis on incoming materials and chemicals. TI and TI suppliers consider certain information to be proprietary, and thus CAS numbers and other limited information may not be available for release.

In no event shall TI's liability arising out of such information exceed the total purchase price of the TI part(s) at issue in this document sold by TI to Customer on an annual basis.

TAPE AND REEL INFORMATION

REEL DIMENSIONS

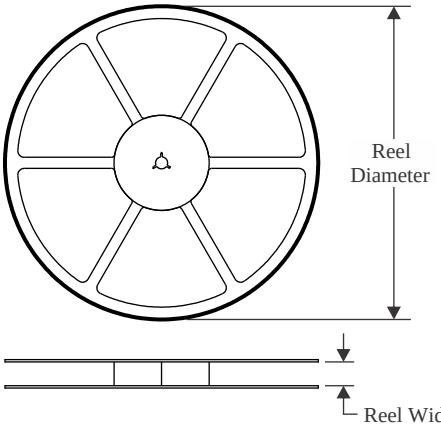

TAPE DIMENSIONS

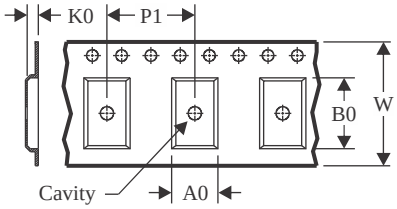

A0	Dimension designed to accommodate the component width
B0	Dimension designed to accommodate the component length
K0	Dimension designed to accommodate the component thickness
W	Overall width of the carrier tape
P1	Pitch between successive cavity centers

QUADRANT ASSIGNMENTS FOR PIN 1 ORIENTATION IN TAPE

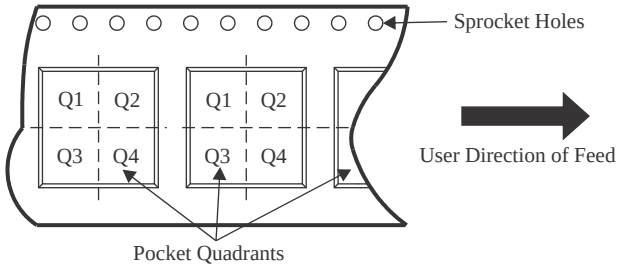

*All dimensions are nominal

Device	Package Type	Package Drawing	Pins	SPQ	Reel Diameter (mm)	Reel Width W1 (mm)	A0 (mm)	B0 (mm)	K0 (mm)	P1 (mm)	W (mm)	Pin1 Quadrant
LMC660AIMX/NOPB	SOIC	D	14	2500	330.0	16.4	6.5	9.35	2.3	8.0	16.0	Q1
LMC660AIMX/NOPB	SOIC	D	14	2500	330.0	16.4	6.5	9.0	2.1	8.0	16.0	Q1
LMC660CMX/NOPB	SOIC	D	14	2500	330.0	16.4	6.5	9.0	2.1	8.0	16.0	Q1
LMC662AIMX/NOPB	SOIC	D	8	2500	330.0	12.4	6.4	5.2	2.1	8.0	12.0	Q1
LMC662AIMX/NOPB	SOIC	D	8	2500	330.0	12.4	6.4	5.2	2.1	8.0	12.0	Q1
LMC662CMX/NOPB	SOIC	D	8	2500	330.0	12.4	6.4	5.2	2.1	8.0	12.0	Q1

TAPE AND REEL BOX DIMENSIONS

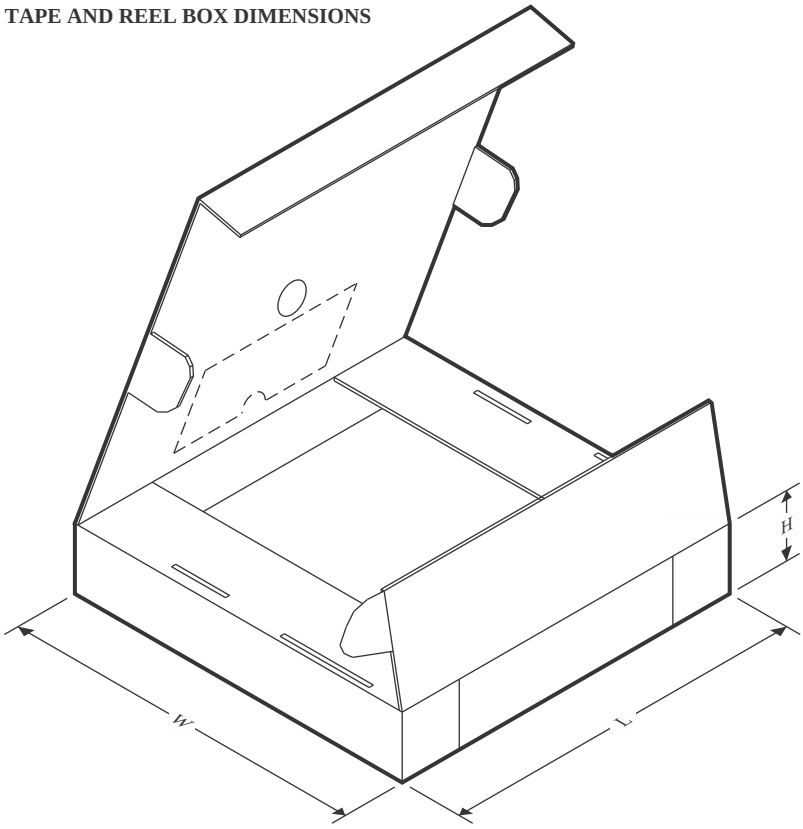

*All dimensions are nominal

Device	Package Type	Package Drawing	Pins	SPQ	Length (mm)	Width (mm)	Height (mm)
LMC660AIMX/NOPB	SOIC	D	14	2500	356.0	356.0	35.0
LMC660AIMX/NOPB	SOIC	D	14	2500	353.0	353.0	32.0
LMC660CMX/NOPB	SOIC	D	14	2500	353.0	353.0	32.0
LMC662AIMX/NOPB	SOIC	D	8	2500	367.0	367.0	35.0
LMC662AIMX/NOPB	SOIC	D	8	2500	353.0	353.0	32.0
LMC662CMX/NOPB	SOIC	D	8	2500	353.0	353.0	32.0

TUBE

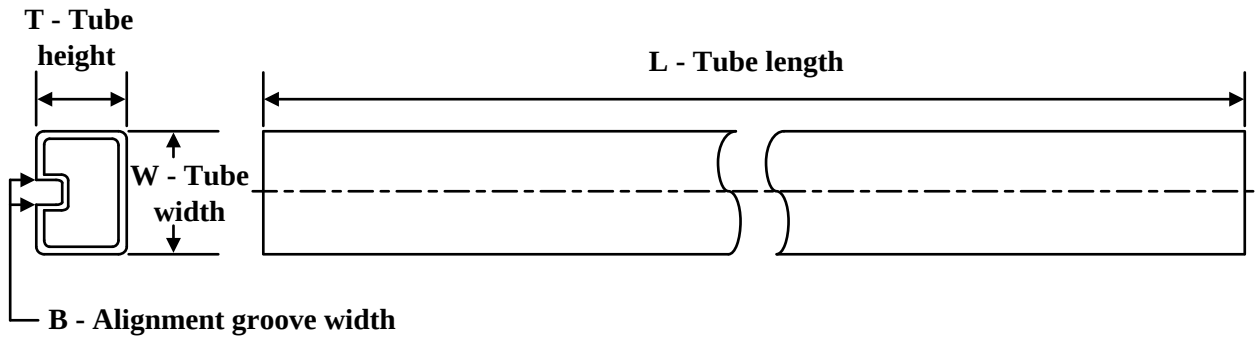

*All dimensions are nominal

Device	Package Name	Package Type	Pins	SPQ	L (mm)	W (mm)	T (µm)	B (mm)
LMC662AIN/NOPB	P	PDIP	8	40	502	14	11938	4.32
LMC662AIN/NOPB.A	P	PDIP	8	40	502	14	11938	4.32
LMC662AIN/NOPB.B	P	PDIP	8	40	502	14	11938	4.32
LMC662CN/NOPB	P	PDIP	8	40	502	14	11938	4.32
LMC662CN/NOPB.A	P	PDIP	8	40	502	14	11938	4.32
LMC662CN/NOPB.B	P	PDIP	8	40	502	14	11938	4.32

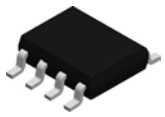

PACKAGE OUTLINE

D0008A

SOIC - 1.75 mm max height

SMALL OUTLINE INTEGRATED CIRCUIT

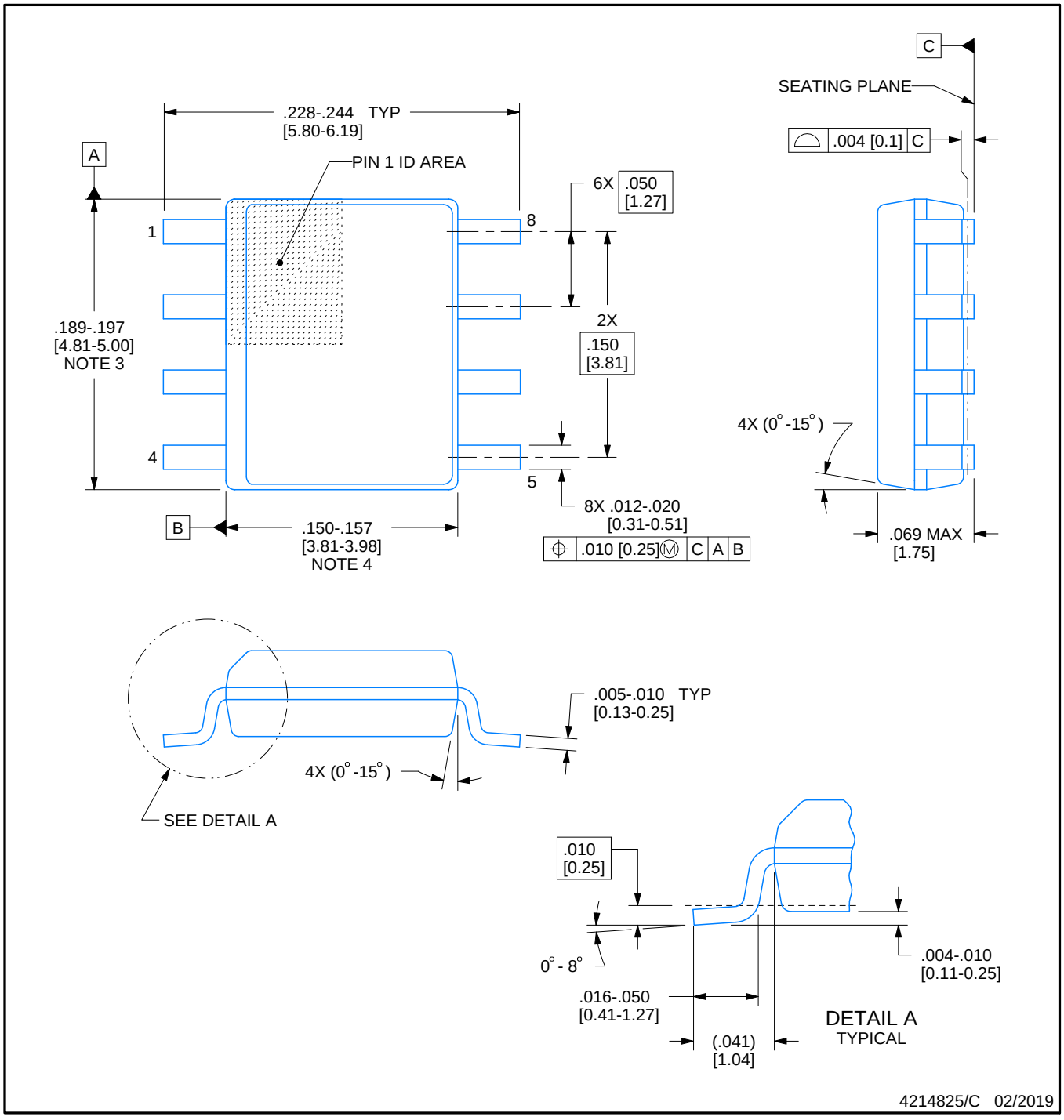

NOTES:

1. Linear dimensions are in inches [millimeters]. Dimensions in parenthesis are for reference only. Controlling dimensions are in inches. Dimensioning and tolerancing per ASME Y14.5M.
2. This drawing is subject to change without notice.
3. This dimension does not include mold flash, protrusions, or gate burrs. Mold flash, protrusions, or gate burrs shall not exceed .006 [0.15] per side.
4. This dimension does not include interlead flash.
5. Reference JEDEC registration MS-012, variation AA.

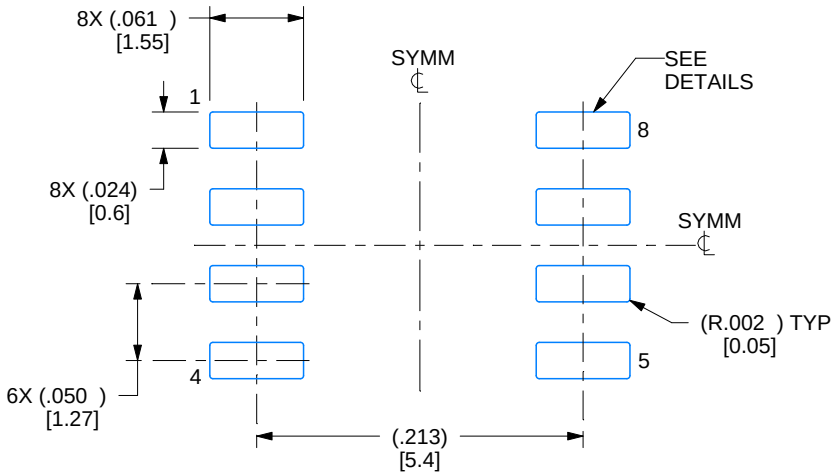

LAND PATTERN EXAMPLE
EXPOSED METAL SHOWN
SCALE:8X

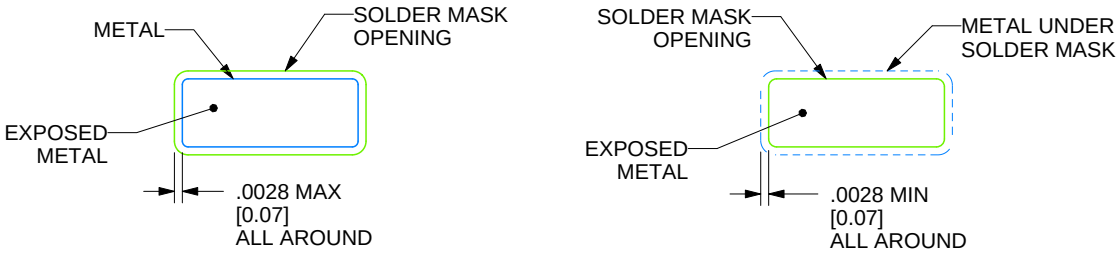

SOLDER MASK DETAILS

4214825/C 02/2019

NOTES: (continued)

6. Publication IPC-7351 may have alternate designs.
7. Solder mask tolerances between and around signal pads can vary based on board fabrication site.

EXAMPLE STENCIL DESIGN

D0008A

SOIC - 1.75 mm max height

SMALL OUTLINE INTEGRATED CIRCUIT

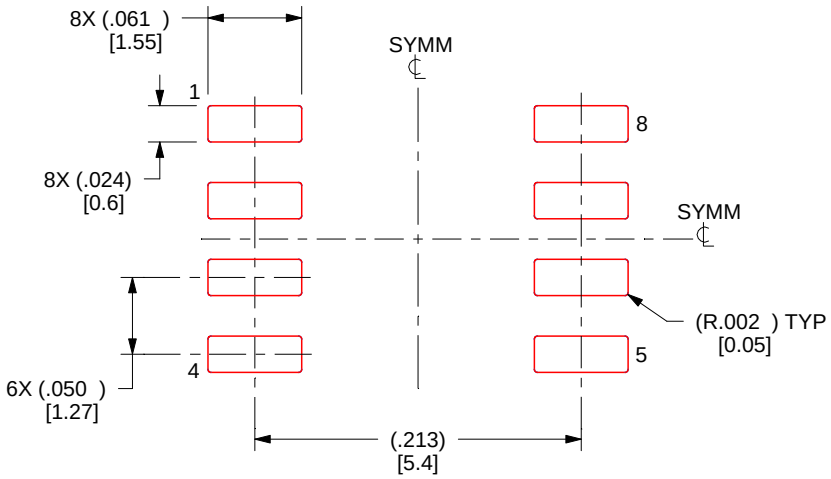

SOLDER PASTE EXAMPLE
BASED ON .005 INCH [0.125 MM] THICK STENCIL
SCALE:8X

4214825/C 02/2019

NOTES: (continued)

8. Laser cutting apertures with trapezoidal walls and rounded corners may offer better paste release. IPC-7525 may have alternate design recommendations.
9. Board assembly site may have different recommendations for stencil design.

P (R–PDIP–T8) PLASTIC DUAL–IN–LINE PACKAGE

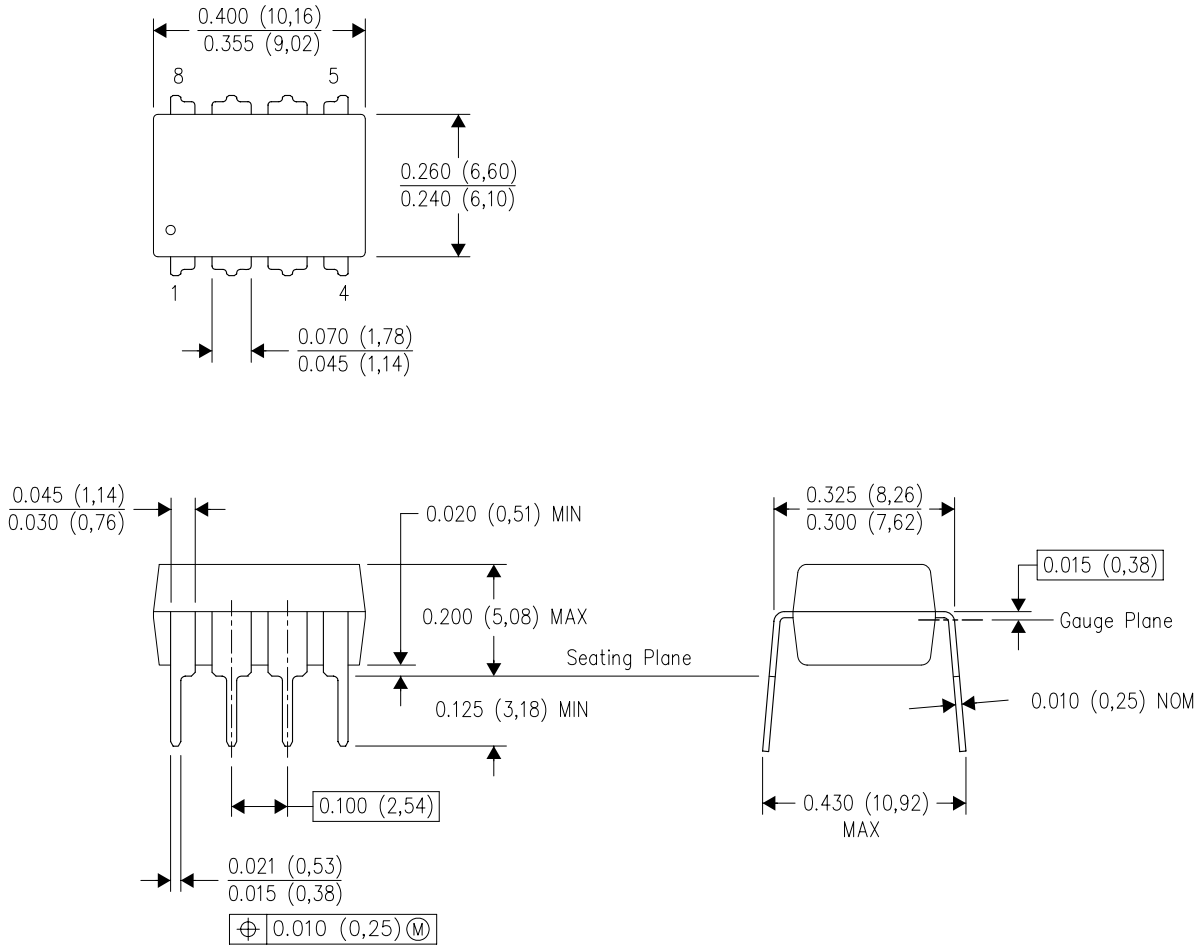

NOTES:
A. All linear dimensions are in inches (millimeters).
B. This drawing is subject to change without notice.
C. Falls within JEDEC MS–001 variation BA.

N (R–PDIP–T**)

PLASTIC DUAL–IN–LINE PACKAGE

16 PINS SHOWN

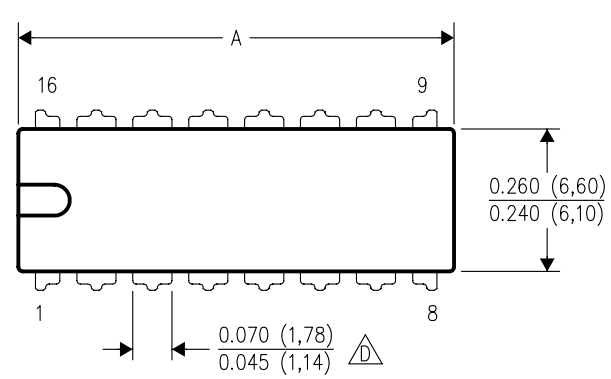

DIM \ PINS **	14	16	18	20
A MAX	0.775 (19,69)	0.775 (19,69)	0.920 (23,37)	1.060 (26,92)
A MIN	0.745 (18,92)	0.745 (18,92)	0.850 (21,59)	0.940 (23,88)
MS–001 VARIATION (C)	AA	BB	AC	AD

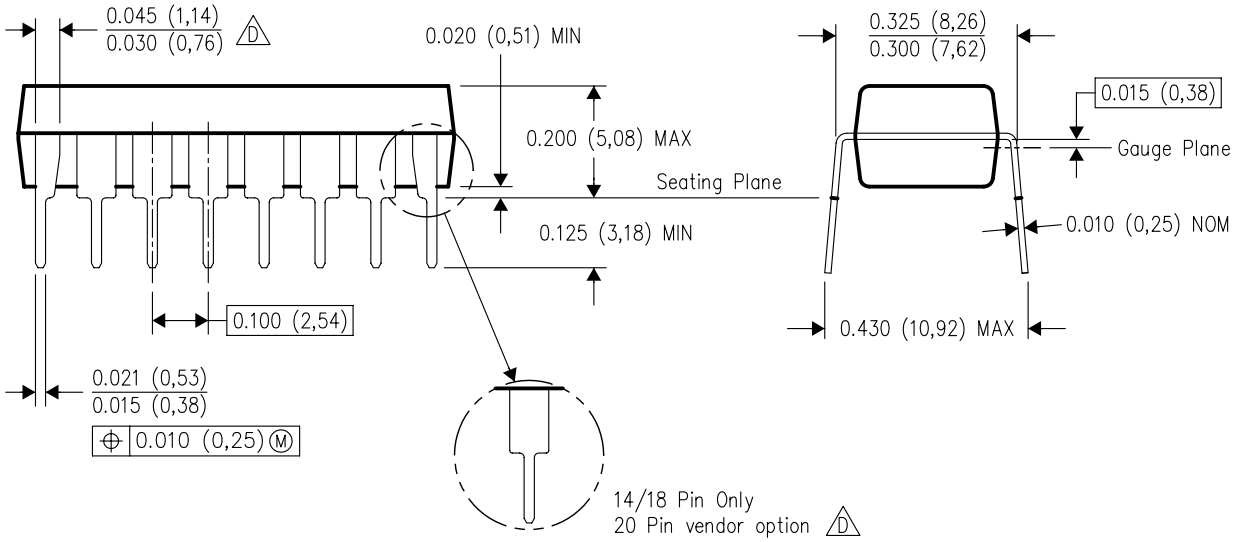

4040049/E 12/2002

NOTES:
A. All linear dimensions are in inches (millimeters).
B. This drawing is subject to change without notice.
C. Falls within JEDEC MS–001, except 18 and 20 pin minimum body length (Dim A).
D. The 20 pin end lead shoulder width is a vendor option, either half or full width.

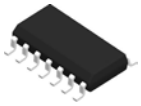

PACKAGE OUTLINE

D0014A

SOIC - 1.75 mm max height

SMALL OUTLINE INTEGRATED CIRCUIT

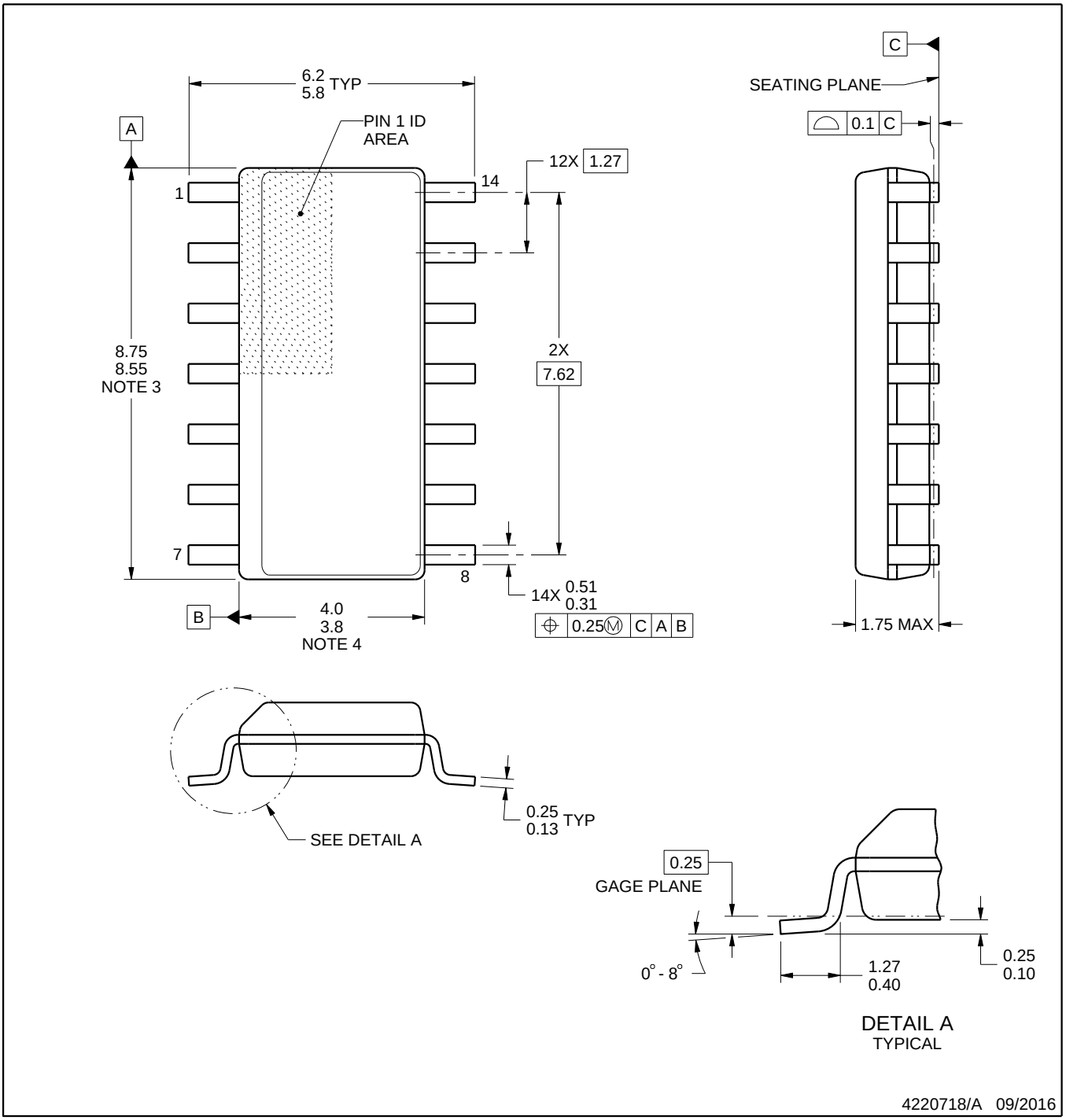

NOTES:

1. All linear dimensions are in millimeters. Dimensions in parenthesis are for reference only. Dimensioning and tolerancing per ASME Y14.5M.
2. This drawing is subject to change without notice.
3. This dimension does not include mold flash, protrusions, or gate burrs. Mold flash, protrusions, or gate burrs shall not exceed 0.15 mm, per side.
4. This dimension does not include interlead flash. Interlead flash shall not exceed 0.43 mm, per side.
5. Reference JEDEC registration MS-012, variation AB.

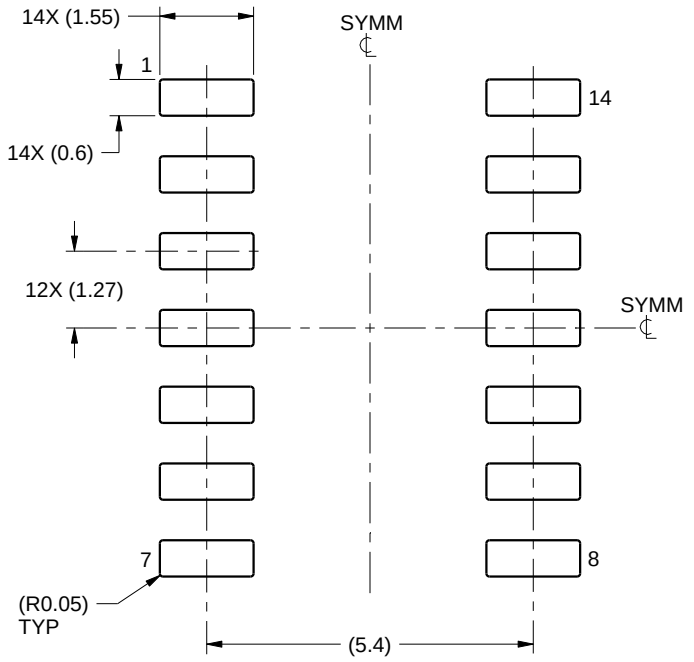

LAND PATTERN EXAMPLE
SCALE:8X

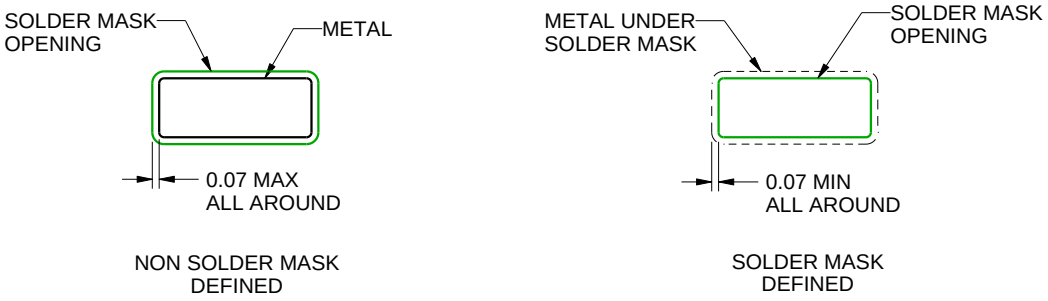

SOLDER MASK DETAILS

4220718/A 09/2016

NOTES: (continued)

6. Publication IPC-7351 may have alternate designs.
7. Solder mask tolerances between and around signal pads can vary based on board fabrication site.

EXAMPLE STENCIL DESIGN

D0014A

SOIC - 1.75 mm max height

SMALL OUTLINE INTEGRATED CIRCUIT

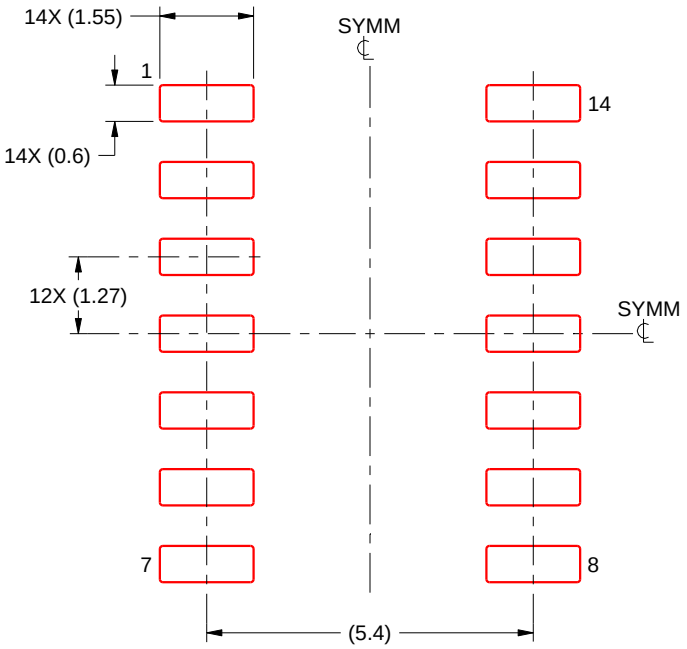

SOLDER PASTE EXAMPLE
BASED ON 0.125 mm THICK STENCIL
SCALE:8X

4220718/A 09/2016

NOTES: (continued)

8. Laser cutting apertures with trapezoidal walls and rounded corners may offer better paste release. IPC-7525 may have alternate design recommendations.
9. Board assembly site may have different recommendations for stencil design.

重要通知和免责声明

TI“按原样”提供技术和可靠性数据（包括数据表）、设计资源（包括参考设计）、应用或其他设计建议、网络工具、安全信息和其他资源，不保证没有瑕疵且不做出任何明示或暗示的担保，包括但不限于对适销性、与某特定用途的适用性或不侵犯任何第三方知识产权的暗示担保。

这些资源可供使用 TI 产品进行设计的熟练开发人员使用。您将自行承担以下全部责任：(1) 针对您的应用选择合适的 TI 产品，(2) 设计、验证并测试您的应用，(3) 确保您的应用满足相应标准以及任何其他安全、安保法规或其他要求。

这些资源如有变更，恕不另行通知。TI 授权您仅可将这些资源用于研发本资源所述的 TI 产品的相关应用。严禁以其他方式对这些资源进行复制或展示。您无权使用任何其他 TI 知识产权或任何第三方知识产权。对于因您对这些资源的使用而对 TI 及其代表造成的任何索赔、损害、成本、损失和债务，您将全额赔偿，TI 对此概不负责。

TI 提供的产品受 TI 销售条款)、TI 通用质量指南 或 ti.com 上其他适用条款或 TI 产品随附的其他适用条款的约束。TI 提供这些资源并不会扩展或以其他方式更改 TI 针对 TI 产品发布的适用的担保或担保免责声明。 除非德州仪器 (TI) 明确将某产品指定为定制产品或客户特定产品，否则其产品均为按确定价格收入目录的标准通用器件。

TI 反对并拒绝您可能提出的任何其他或不同的条款。

版权所有 © 2026，德州仪器 (TI) 公司

最后更新日期：2025 年 10 月