LMK1D1208I I²C 可配置低附加抖动 LVDS 缓冲器

1 特性

- 具有 2 个输入和 8 个输出的高性能 LVDS 时钟缓冲器系列
- 输出频率最高可达 2GHz
- 电源电压：1.8V/2.5V/3.3V ± 5%
- 通过 I²C 编程实现器件可配置性
  - 单独的输入和输出启用/禁用
  - 单独的输出振幅选择（标准或增强）
  - 组输入多路复用器
- 通过 IDX 引脚实现四个可编程 I²C 地址
- 低附加抖动：156.25MHz 下 12kHz 至 20MHz 范围内的
  RMS 最大值小于 60fs
  - 超低相位本底噪声：-164dBc/Hz（典型值）
- 超低传播延迟：< 575ps（最大值）
- 输出偏斜：20ps（最大值）
- 通用输入接受 LVDS、LVPECL、LVCMOS、HCSL 和 CML
- 失效防护输入
- LVDS 基准电压，V_{AC_REF}，适用于容性耦合输入
- 工业温度范围：–40°C 至 105°C
- 可用封装
  - 6mm × 6mm 40 引脚 VQFN (RHA)

2 应用

- 电信及网络
- 医疗成像
- 测试和测量设备
- 无线通信
- 专业音频/视频

3 说明

LMK1D1208I 是一款 I²C 可编程 LVDS 时钟缓冲器。该器件具有两个输入和八对差分 LVDS 时钟输出（OUT0 到 OUT7），具有超小延迟，可实现时钟分配。输入可以为 LVDS、LVPECL、LVCMOS、HCSL 或 CML。

LMK1D1208I 专为驱动 50Ω 传输线路而设计。在单端模式下驱动输入时，对未使用的负输入引脚施加适当的偏置电压（请参阅图 9-6）。

I²C 编程使该器件能够配置为单组缓冲区（两个输入之一分配到八个输出对）或双组缓冲区（每个输入分配到四个输出对）。每个输出都可以配置为具有标准 (350mV) 或增强 (500mV) 摆幅。该器件还通过 I²C 编程集成了单个输出通道的启用/禁用。LMK1D1208I 具有失效防护输入，可防止在没有输入信号的情况下输出发生振荡并允许在提供 VDD 之前输入信号。

该器件可在 1.8V、2.5V 或 3.3V 电源环境下工作，其特点是温度范围为 –40°C 至 105°C（环境温度）。

封装信息

器件型号	封装(1)	封装尺寸（标称值）(2)
LMK1D1208I	VQFN (40)	6.00mm × 6.00mm

(1) 如需了解所有可用封装，请参阅数据表末尾的可订购产品附录。
(2) 封装尺寸（长 × 宽）为标称值，并包括引脚（如适用）。

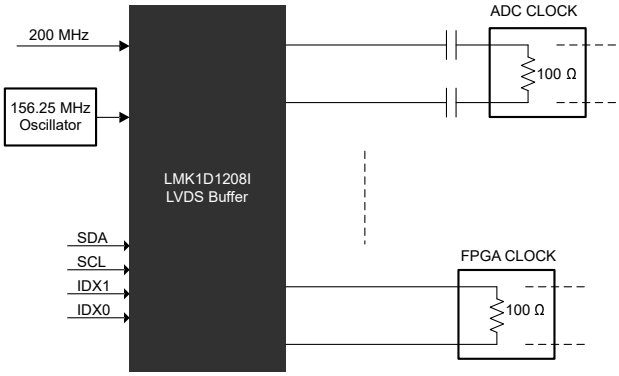

应用示例

本文档旨在为方便起见，提供有关 TI 产品中文版本的信息，以确认产品的概要。有关适用的官方英文版本的最新信息，请访问 www.ti.com，其内容始终优先。TI 不保证翻译的准确性和有效性。在实际设计之前，请务必参考最新版本的英文版本。
English Data Sheet: SNAS828

Table of Contents

1 特性.... 1
2 应用.... 1
3 说明.... 1
4 Revision History.... 2
5 Device Comparison.... 3
6 Pin Configuration and Functions.... 4
7 Specifications.... 6
7.1 Absolute Maximum Ratings.... 6
7.2 ESD Ratings.... 6
7.3 Recommended Operating Conditions.... 6
7.4 Thermal Information.... 7
7.5 Electrical Characteristics.... 7
7.6 Typical Characteristics.... 11
8 Parameter Measurement Information.... 12
9 Detailed Description.... 14
9.1 Overview.... 14
9.2 Functional Block Diagram.... 14
9.3 Feature Description.... 15
9.4 Device Functional Modes.... 18
9.5 Programming.... 20
9.6 Register Maps.... 21
10 Application and Implementation.... 25
10.1 Application Information.... 25
10.2 Typical Application.... 25
10.3 Power Supply Recommendations.... 28
10.4 Layout.... 29
11 Device and Documentation Support.... 31
11.1 Documentation Support.... 31
11.2 接收文档更新通知.... 31
11.3 支持资源.... 31
11.4 Trademarks.... 31
11.5 静电放电警告.... 31
11.6 术语表.... 31
12 Mechanical, Packaging, and Orderable Information.... 31
12.1 Package Option Addendum.... 32
12.2 Tape and Reel Information.... 34

4 Revision History

注：以前版本的页码可能与当前版本的页码不同

Changes from Revision * (February 2022) to Revision A (June 2023) **Page**

- 将表标题从“器件信息”更改为“封装信息”.... 1
- Added the *Device Comparison* table for the LMK1Dxxxx buffer device family.... 3
- Moved the *Power Supply Recommendations* and *Layout* sections to the *Application and Implementation* section.... 28

Copyright © 2023 Texas Instruments Incorporated

5 Device Comparison

DEVICE	DEVICE TYPE	FEATURES	OUTPUT SWING	PACKAGE	BODY SIZE
LMK1D2108	Dual 1:8	Global output enable and swing control through pin control	350 mV	VQFN (48)	7.00 mm × 7.00 mm
			500 mV		
LMK1D2106	Dual 1:6	Global output enable and swing control through pin control	350 mV	VQFN (40)	6.00 mm × 6.00 mm
			500 mV		
LMK1D2104	Dual 1:4	Global output enable and swing control through pin control	350 mV	VQFN (28)	5.00 mm × 5.00 mm
			500 mV		
LMK1D2102	Dual 1:2	Global output enable and swing control through pin control	350 mV	VQFN (16)	3.00 mm × 3.00 mm
			500 mV		
LMK1D1216	2:16	Global output enable control through pin control	350 mV	VQFN (48)	7.00 mm × 7.00 mm
			500 mV		
LMK1D1212	2:12	Global output enable control through pin control	350 mV	VQFN (40)	6.00 mm × 6.00 mm
			500 mV		
LMK1D1208P	2:8	Individual output enable control through pin control	350 mV	VQGN (40)	6.00 mm × 6.00 mm
			500 mV		
LMK1D1208I	2:8	Individual output enable control through I^2C	350 mV	VQFN (40)	6.00 mm × 6.00 mm
			500 mV		
LMK1D1208	2:8	Global output enable control through pin control	350 mV	VQFN (28)	5.00 mm × 5.00 mm
LMK1D1204P	2:4	Individual output enable control through pin control	350 mV	VQGN (28)	5.00 mm × 5.00 mm
LMK1D1204	2:4	Global output enable control through pin control	350 mV	VQFN (16)	3.00 mm × 3.00 mm

Copyright © 2023 Texas Instruments Incorporated

6 Pin Configuration and Functions

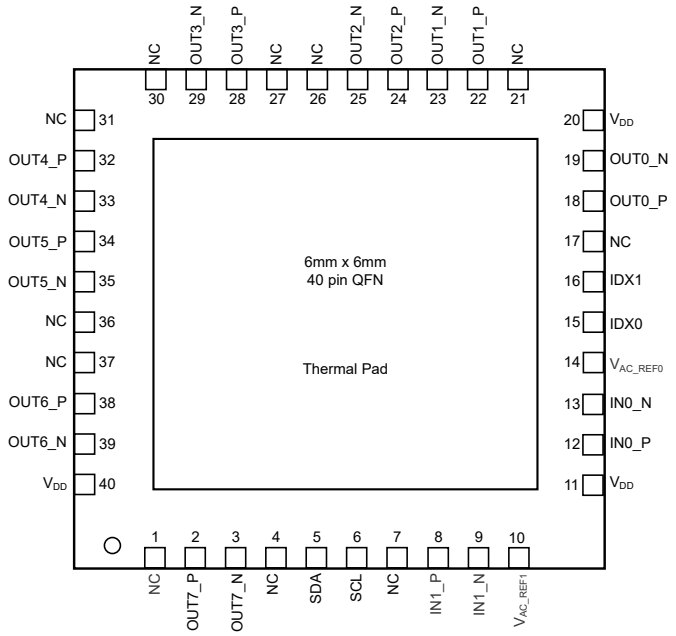

图 6-1. LMK1D1208I: RHA Package 40-Pin VQFN (Top View)

表 6-1. Pin Functions

PIN		TYPE[(1)]	DESCRIPTION
NAME	LMK1D1208I		
DIFFERENTIAL/SINGLE-ENDED CLOCK INPUT			
IN0_P, IN0_N	12, 13	I	Primary: Differential input pair or single-ended input
IN1_P, IN1_N	8, 9	I	Secondary: Differential input pair or single-ended input.
I²C PROGRAMMING			
SDA	5	I/O	I²C data
SCL	6	I	I²C clock
IDX0	15	I,S,PU	I²C address bit[0]. This is a 2-level input that is decoded in conjunction with pin 15 to set the I²C address. It has internal 670-kΩ pullup.
IDX1	16	I,S, PU	I²C address bit[1]. This is a 2-level input that is decoded in conjunction with pin 16 to set the I²C address. It has internal 670-kΩ pullup.
BIAS VOLTAGE OUTPUT			
V_{AC_REF0}, V_{AC_REF1}	14, 10	O	Bias voltage output for capacitive coupled inputs. If used, TI recommends using a 0.1-µF capacitor to GND on this pin.
DIFFERENTIAL CLOCK OUTPUT			
OUT0_P, OUT0_N	18, 19	O	Differential LVDS output pair number 0
OUT1_P, OUT1_N	22, 23	O	Differential LVDS output pair number 1
OUT2_P, OUT2_N	24, 25	O	Differential LVDS output pair number 2
OUT3_P, OUT3_N	28, 29	O	Differential LVDS output pair number 3
OUT4_P, OUT4_N	32, 33	O	Differential LVDS output pair number 4
OUT5_P, OUT5_N	34, 35	O	Differential LVDS output pair number 5
OUT6_P, OUT6_N	38, 39	O	Differential LVDS output pair number 6
OUT7_P, OUT7_N	2, 3	O	Differential LVDS output pair number 7

Copyright © 2023 Texas Instruments Incorporated

表 6-1. Pin Functions (continued)

PIN		TYPE(1)	DESCRIPTION
NAME	LMK1D1208I		
SUPPLY VOLTAGE			
V_{DD}	11, 20, 40	P	Device power supply (1.8 V, 2.5 V, or 3.3 V)
GROUND			
DAP	DAP	G	Die Attach Pad. Connect to the printed circuit board (PCB) ground plane for heat dissipation.
NO CONNECT			
NC	1, 4, 7, 17, 21, 26, 27, 30, 31, 36, 37	—	No connection. Leave floating.

(1) The definitions below define the I/O type for each pin.

- I = Input
- O = Output
- I / O = Input / Output
- PU = Internal 670-kΩ Pullup
- S = Hardware Configuration Pin
- P = Power Supply
- G = Ground

7 Specifications

7.1 Absolute Maximum Ratings

over operating free-air temperature range (unless otherwise noted)[1]

		MIN	MAX	UNIT
V_{DD}	Supply voltage	– 0.3	3.6	V
V_{IN}	Input voltage	– 0.3	3.6	V
V_O	Output voltage	– 0.3	V_{DD} + 0.3	V
I_{IN}	Input current	– 20	20	mA
I_O	Continuous output current	– 50	50	mA
T_J	Junction temperature		135	°C
T_{stg}	Storage temperature [2]	– 65	150	°C

(1) Operation outside the *Absolute Maximum Ratings* may cause permanent device damage. *Absolute Maximum Ratings* do not imply functional operation of the device at these or any other conditions beyond those listed under *Recommended Operating Conditions*. If used outside the *Recommended Operating Conditions* but within the *Absolute Maximum Ratings*, the device may not be fully functional, and this may affect device reliability, functionality, performance, and shorten the device lifetime.
(2) Device unpowered

7.2 ESD Ratings

			VALUE	UNIT
$V_{(ESD)}$	Electrostatic discharge	Human body model (HBM), per ANSI/ESDA/JEDEC JS-001, all pins[1]	±3000	V
		Charged device model (CDM), per ANSI/ESDA/JEDEC JS-002, all pins[2]	±1000	

(1) JEDEC document JEP155 states that 500-V HBM allows safe manufacturing with a standard ESD control process.
(2) JEDEC document JEP157 states that 250-V CDM allows safe manufacturing with a standard ESD control process.

7.3 Recommended Operating Conditions

over operating free-air temperature range (unless otherwise noted)

			MIN	NOM	MAX	UNIT
V_{DD}	Core supply voltage	3.3-V supply	3.135	3.3	3.465	V
		2.5-V supply	2.375	2.5	2.625	
		1.8-V supply	1.71	1.8	1.89	
Supply Ramp	Supply voltage ramp	Requires monotonic ramp (10-90% of V_{DD})	0.1		20	ms
T_A	Operating free-air temperature		– 40		105	°C
T_J	Operating junction temperature		– 40		135	°C

Copyright © 2023 Texas Instruments Incorporated

7.4 Thermal Information

THERMAL METRIC[1]		LMK1D1208I VQFN 40 PINS	UNIT
$R_{\theta JA}$	Junction-to-ambient thermal resistance	39.1	°C/W
$R_{\theta JC(top)}$	Junction-to-case (top) thermal resistance	32.4	°C/W
$R_{\theta JB}$	Junction-to-board thermal resistance	20.2	°C/W
Ψ_{JT}	Junction-to-top characterization parameter	1	°C/W
Ψ_{JB}	Junction-to-board characterization parameter	20.2	°C/W
$R_{\theta JC(bot)}$	Junction-to-case (bottom) thermal resistance	8.3	°C/W

(1) For more information about traditional and new thermal metrics, see the Semiconductor and IC Package Thermal Metrics application report.

7.5 Electrical Characteristics

V_{DD} = 1.8 V ± 5 %, –40°C ≤ T_A ≤ 105°C. Typical values are at V_{DD} = 1.8 V, 25°C (unless otherwise noted)

PARAMETER		TEST CONDITIONS	MIN	TYP	MAX	UNIT
POWER SUPPLY CHARACTERISTICS						
IDD_{STAT}	LMK1D1208I	All-outputs enabled and unterminated, f = 0 Hz (AMP_SEL =1)		55		mA
IDD_{100M}	LMK1D1208I	All-outputs enabled, R_L = 100 Ω, f =100 MHz (AMP_SEL = 0, default)		75	95	mA
IDD_{100M}	LMK1D1208I	All-outputs enabled, RL = 100 Ω, f =100 MHz, AMP_SEL = 1			110	mA
IDX INPUT CHARACTERISTICS (Applies to V_{DD} = 1.8 V ± 5%, 2.5 V ± 5% and 3.3 V ± 5%)						
V_{IH}	Input high voltage	Minimum input voltage for a logical "1" state	0.7 × V_{CC}		V_{CC} + 0.3	V
V_{IL}	Input low voltage	Maximum input voltage for a logical "0" state	–0.3		0.3 × V_{CC}	V
I_{IH}	Input high current	V_{DD} can be 1.8V/2.5V/3.3V with V_{IH} = V_{DD}			30	µA
I_{IL}	Input low current	V_{DD} can be 1.8V/2.5V/3.3V with V_{IH} = V_{DD}	–30			µA
$R_{pull-up(IDX)}$	Input pullup resistor			670		kΩ
I^2C INTERFACE CHARACTERISTICS (Applies to V_{DD} = 1.8 V ± 5%, 2.5 V ± 5% and 3.3 V ± 5%)						
V_{IH}	Input high voltage		0.7 × V_{CC}		V_{CC} + 0.3	V
V_{IL}	Input low voltage		–0.3		0.3 × V_{CC}	V
I_{IH}	Input high current				30	µA
I_{IL}	Input low current		–30			µA
C_{IN_SE}	Input capacitance	at 25°C		2		pF
V_{OL}	Output low voltage	I_{OL} = 3 mA			0.3	V
f_{SCL}	I^2C clock rate	Standard			100	kHz
		Fast mode			400	
		Ultra Fast mode			1000	
$t_{SU(START)}$	START condition setup time	SCL high before SDA low	0.6			us
t_H(START)	START condition hold time	SCL low after SDA low	0.6			us
$t_{W(SCLH)}$	SCL pulse width high		0.6			us
$t_{W(SCLL)}$	SCL pulse width low		1.3			us

V_{DD} = 1.8 V ± 5 %, –40°C ≤ T_A ≤ 105°C. Typical values are at V_{DD} = 1.8 V, 25°C (unless otherwise noted)

PARAMETER		TEST CONDITIONS	MIN	TYP	MAX	UNIT
$t_{SU(SDA)}$	SDA setup time		100			ns
$t_{H(SDA)}$	SDA hold time	SDA valid after SCL low	0		0.9	us
$t_{R(IN)}$	SDA/SCL input rise time				300	ns
$t_{F(IN)}$	SDA/SCL input fall time				300	ns
$t_{F(OUT)}$	SDA output fall time	C_{BUS} <= 400 pF			300	ns
t_{SU}(STOP)	STOP condition setup time		0.6			us
t_{BUS}	Bus free time between STOP and START		1.3			us
SINGLE-ENDED LVCMOS/LVTTL CLOCK INPUT (Applies to V_{DD} = 1.8 V ± 5%, 2.5 V ± 5% and 3.3 V ± 5%)						
f_{IN}	Input frequency	Clock input	DC		250	MHz
$V_{IN_S\text{-}E}$	Single-ended Input Voltage Swing	Assumes a square wave input with two levels	0.4		3.465	V
dVIN/dt	Input Slew Rate (20% to 80% of the amplitude)		0.05			V/ns
I_{IH}	Input high current	V_{DD} = 3.465 V, V_{IH} = 3.465 V			50	µA
I_{IL}	Input low current	V_{DD} = 3.465 V, V_{IL} = 0 V	–30			µA
C_{IN_SE}	Input capacitance	at 25°C		3.5		pF
DIFFERENTIAL CLOCK INPUT (Applies to V_{DD} = 1.8 V ± 5%, 2.5 V ± 5% and 3.3 V ± 5%)						
f_{IN}	Input frequency	Clock input			2	GHz
$V_{IN,DIFF(p\text{-}p)}$	Differential input voltage peak-to-peak {2*(V_{INP}-V_{INN})}	V_{ICM} = 1 V (V_{DD} = 1.8 V)	0.3		2.4	V_{PP}
		V_{ICM} = 1.25 V (V_{DD} = 2.5 V/3.3 V)	0.3		2.4	
V_{ICM}	Input common mode voltage	$V_{IN,DIFF(P\text{-}P)}$ > 0.4 V (V_{DD} = 1.8 V/2.5/3.3 V)	0.25		2.3	V
I_{IH}	Input high current	V_{DD} = 3.465 V, V_{INP} = 2.4 V, V_{INN} = 1.2 V			30	µA
I_{IL}	Input low current	V_{DD} = 3.465 V, V_{INP} = 0 V, V_{INN} = 1.2 V	–30			µA
$C_{IN_S\text{-}E}$	Input capacitance (Single-ended)	at 25°C		3.5		pF
LVDS DC OUTPUT CHARACTERISTICS						
|VOD|	Differential output voltage magnitude | V_{OUTP} - V_{OUTN}|	$V_{IN,DIFF(P\text{-}P)}$ = 0.3 V, R_{LOAD} = 100 Ω, AMP_SEL = 0	250	350	450	mV
|VOD|	Differential output voltage magnitude | V_{OUTP} - V_{OUTN}|	$V_{IN,DIFF(P\text{-}P)}$ = 0.3 V, R_{LOAD} = 100 Ω, AMP_SEL = 1	400	500	650	mV
ΔVOD	Change in differential output voltage magnitude. Per output, defined as the difference between VOD in logic hi/lo states.	$V_{IN,DIFF(P\text{-}P)}$ = 0.3 V, R_{LOAD} = 100 Ω, AMP_SEL = 0	–15		15	mV
ΔVOD	Change in differential output voltage magnitude	$V_{IN,DIFF(P\text{-}P)}$ = 0.3 V, R_{LOAD} = 100 Ω, AMP_SEL = 1	–20		20	mV
$V_{OC(SS)}$	Steady-state common mode output voltage	$V_{IN,DIFF(P\text{-}P)}$ = 0.3 V, R_{LOAD} = 100 Ω (V_{DD} = 1.8 V)	1		1.2	V
		$V_{IN,DIFF(P\text{-}P)}$ = 0.3 V, R_{LOAD} = 100 Ω (V_{DD} = 2.5 V/3.3 V)	1.1		1.375	
$V_{OC(SS)}$	Steady-state common mode output voltage	$V_{IN,DIFF(P\text{-}P)}$ = 0.3 V, R_{LOAD} = 100 Ω (V_{DD} = 1.8 V), AMP_SEL = 1	0.8		1	V
		$V_{IN,DIFF(P\text{-}P)}$ = 0.3 V, R_{LOAD} = 100 Ω (V_{DD} = 2.5 V/3.3 V), AMP_SEL = 1	0.9		1.1	
$\Delta V_{OC(SS)}$	Change in steady-state common mode output voltage. Per output, defined as the difference in VOC in logic hi/lo states.	$V_{IN,DIFF(P\text{-}P)}$ = 0.3 V, R_{LOAD} = 100 Ω, AMP_SEL = 0	–15		15	mV

Copyright © 2023 Texas Instruments Incorporated

V_{DD} = 1.8 V ± 5 %, –40°C ≤ T_A ≤ 105°C. Typical values are at V_{DD} = 1.8 V, 25°C (unless otherwise noted)

PARAMETER		TEST CONDITIONS	MIN	TYP	MAX	UNIT
$\Delta V_{OC(SS)}$	Change in steady-state common mode output voltage	$V_{IN,DIFF(P-P)}$ = 0.3 V, R_{LOAD} = 100 Ω, AMP_SEL = 1	–20		20	mV
LVDS AC OUTPUT CHARACTERISTICS						
V_{ring}	Output overshoot and undershoot	$V_{IN,DIFF(P-P)}$ = 0.3 V, R_{LOAD} = 100 Ω, f_{OUT} = 491.52 MHz	–0.1		0.1	V_{OD}
V_{OS}	Output AC common mode	$V_{IN,DIFF(P-P)}$ = 0.3 V, R_{LOAD} = 100 Ω, AMP_SEL = 0		50	100	mV_{pp}
V_{OS}	Output AC common mode	$V_{IN,DIFF(P-P)}$ = 0.3 V, R_{LOAD} = 100 Ω, AMP_SEL = 1		75	150	mV_{pp}
I_{OS}	Short-circuit output current (differential)	V_{OUTP} = V_{OUTN}	–12		12	mA
$I_{OS(cm)}$	Short-circuit output current (common-mode)	V_{OUTP} = V_{OUTN} = 0	–24		24	mA
t_{PD}	Propagation delay	$V_{IN,DIFF(P-P)}$ = 0.3 V, R_{LOAD} = 100 Ω (2)	0.3		0.575	ns
$t_{SK, O}$	Output skew	Skew between outputs with the same load conditions (4 and 8 channel) (3)			20	ps
$t_{SK, PP}$	Part-to-part skew	Skew between outputs on different parts subjected to the same operating conditions with the same input and output loading.			250	ps
$t_{SK, P}$	Pulse skew	50% duty cycle input, crossing point-to-crossing-point distortion (4)	–20		20	ps
$t_{RJIT(ADD)}$	Random additive Jitter (rms)	f_{IN} = 156.25 MHz with 50% duty-cycle, Input slew rate = 1.5V/ns, Integration range = 12 kHz – 20 MHz, with output load R_{LOAD} = 100 Ω		50	60	fs, RMS
Phase noise	Phase Noise for a carrier frequency of 156.25 MHz with 50% duty-cycle, Input slew rate = 1.5V/ns with output load R_{LOAD} = 100 Ω	PN_{1kHz}		–143		dBc/Hz
		PN_{10kHz}		–152		
		PN_{100kHz}		–157		
		PN_{1MHz}		–160		
		PN_{floor}		–164		
MUX_{ISO}	Mux Isolation	f_{IN} = 156.25 MHz. The difference in power level at f_{IN} when the selected clock is active and the unselected clock is static versus when the selected clock is inactive and the unselected clock is active.		80		dB
ODC	Output duty cycle	With 50% duty cycle input	45		55	%
t_R/t_F	Output rise and fall time	20% to 80% with R_{LOAD} = 100 Ω			300	ps
t_R/t_F	Output rise and fall time	20% to 80% with RLOAD = 100 Ω (AMP_SEL= 1)			300	ps
$t_{en/disable}$	Output Enable and Disable Time	Time taken for outputs to go from disable state to enable state and vice versa. (5) (6)			1	us
I_{leakZ}	Output leakage current in High Z	Outputs are held in high Z mode with OUTP = OUTN (max applied external voltage is the lesser of VDD or 1.89V and minimum applied external voltage is 0V			50	uA

V_{DD} = 1.8 V ± 5 %, –40°C ≤ T_A ≤ 105°C. Typical values are at V_{DD} = 1.8 V, 25°C (unless otherwise noted)

PARAMETER		TEST CONDITIONS	MIN	TYP	MAX	UNIT
V_{AC_REF}	Reference output voltage	VDD = 2.5 V, I_{LOAD} = 100 µA	0.9	1.25	1.375	V
POWER SUPPLY NOISE REJECTION (PSNR) V_{DD} = 2.5 V/ 3.3 V						
PSNR	Power Supply Noise Rejection ($f_{carrier}$ = 156.25 MHz)	10 kHz, 100 mVpp ripple injected on V_{DD}		–70		dBc
		1 MHz, 100 mVpp ripple injected on V_{DD}		–50		

(1) Measured between single-ended/differential input crossing point to the differential output crossing point.
(2) For the dual bank devices, the inputs are phase aligned and have 50% duty cycle.
(3) Defined as the magnitude of the time difference between the high-to-low and low-to-high propagation delay times at an output.
(4) Applies to the dual bank family.
(5) Time starts after the acknowledge bit

Copyright © 2023 Texas Instruments Incorporated

7.6 Typical Characteristics

图 7-1 captures the variation of the LMK1D1208I current consumption with input frequency and supply voltage. 图 7-2 shows the variation of the differential output voltage (VOD) swept across frequency.

It is important to note that 图 7-1 and 图 7-2 serve as a guidance to the users on what to expect for the range of operating frequency supported by LMK1D1208I. These graphs were plotted for a limited number of frequencies and load conditions which may not represent the customer system.

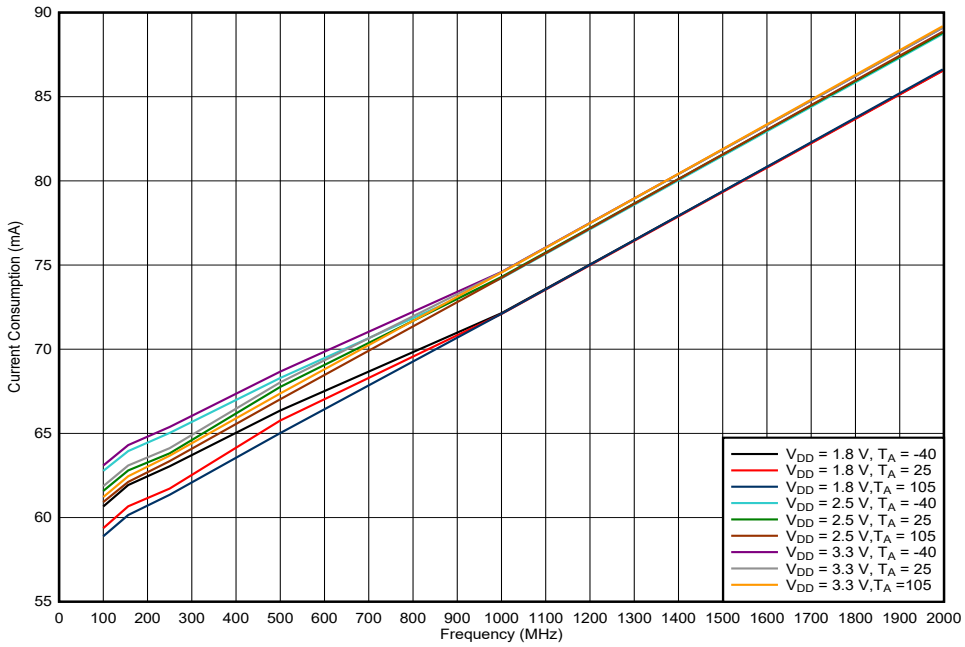

图 7-1. LMK1D1208I Current Consumption vs. Frequency

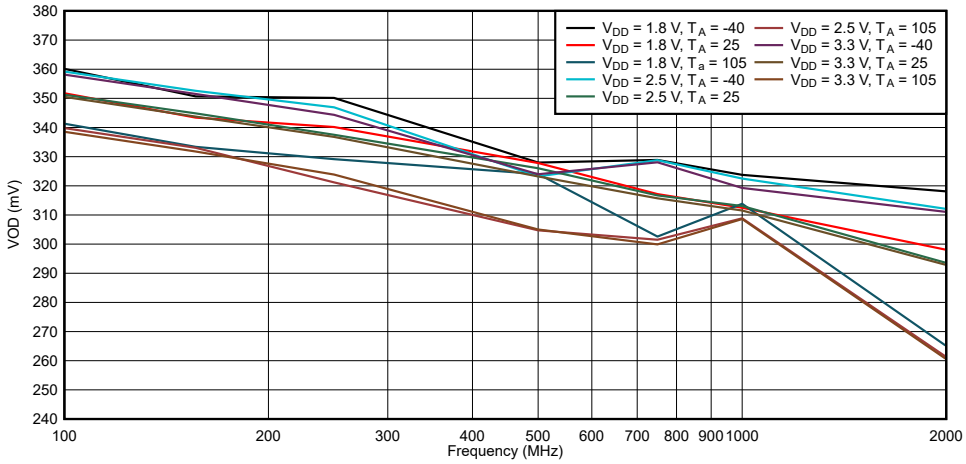

图 7-2. LMK1D1208I VOD vs. Frequency

8 Parameter Measurement Information

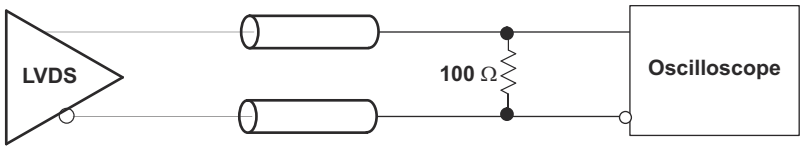

图 8-1. LVDS Output DC Configuration During Device Test

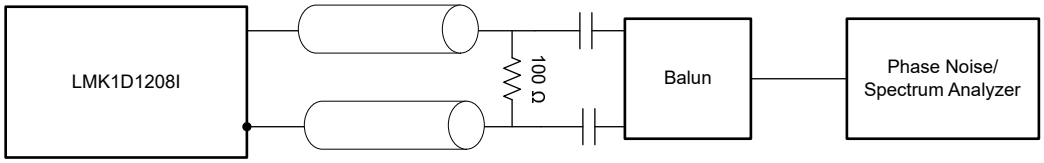

图 8-2. LVDS Output AC Configuration During Device Test

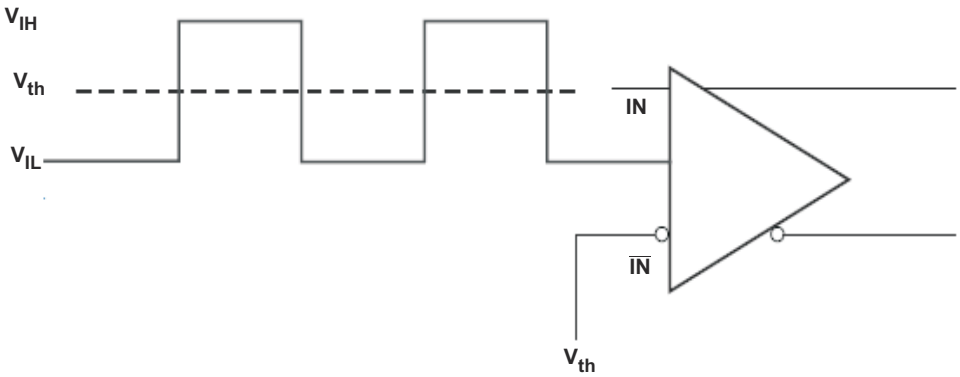

图 8-3. DC-Coupled LVCMOS Input During Device Test

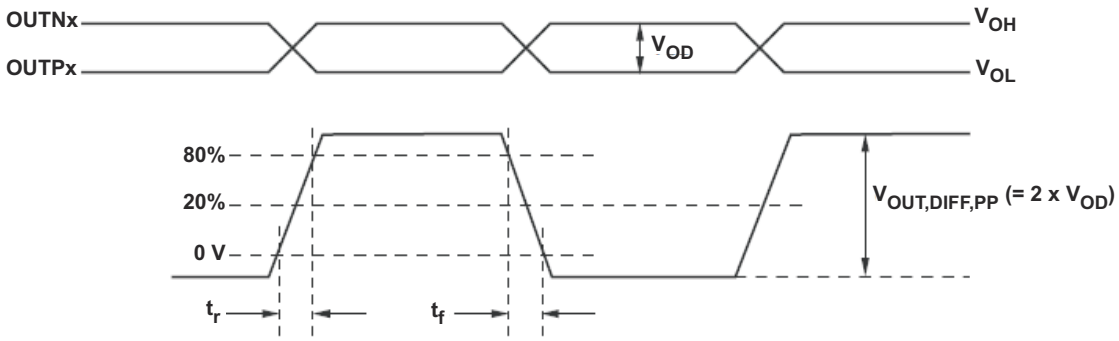

图 8-4. Output Voltage and Rise/Fall Time

Copyright © 2023 Texas Instruments Incorporated

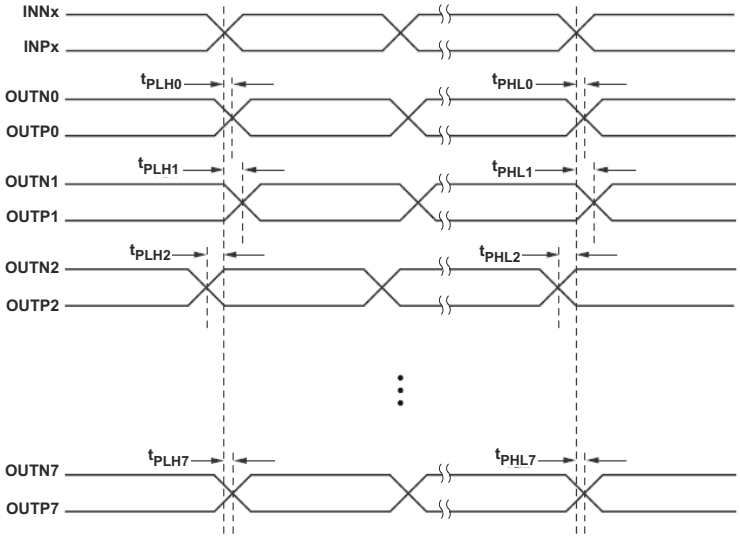

A. Output skew is calculated as the greater of the following: the difference between the fastest and the slowest t_{PLHn} or the difference between the fastest and the slowest t_{PHLn} (n = 0, 1, 2, ..7)

B. Part-to-part skew is calculated as the greater of the following: the difference between the fastest and the slowest t_{PLHn} or the difference between the fastest and the slowest t_{PHLn} across multiple devices (n = 0, 1, 2, ..7)

图 8-5. Output Skew and Part-to-Part Skew

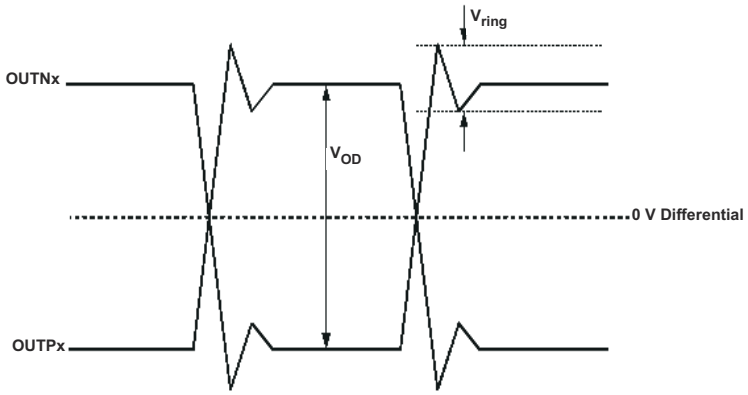

图 8-6. Output Overshoot and Undershoot

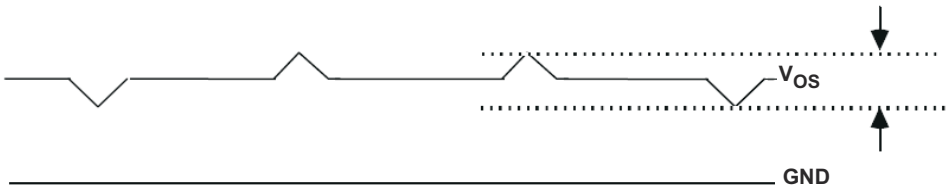

图 8-7. Output AC Common Mode

9 Detailed Description

9.1 Overview

The LMK1D1208I is a low-additive jitter, I²C-programmable, LVDS output clock buffer that uses CMOS transistors to control the output current. Therefore, proper biasing and termination are required to ensure correct operation of the device and to maximize signal integrity. The LMK1D1208I also includes status and control registers for configuring the different modes in the device.

The proper LVDS termination for signal integrity over two 50-Ω lines is 100 Ω between the outputs on the receiver end. Either DC-coupled termination or AC-coupled termination can be used for LVDS outputs. TI recommends placing a termination resistor close to the receiver. If the receiver is internally biased to a voltage different than the output common-mode voltage of the LMK1D1208I, AC coupling must be used.If the LVDS receiver has internal 100-Ω termination, external termination must be omitted.

9.2 Functional Block Diagram

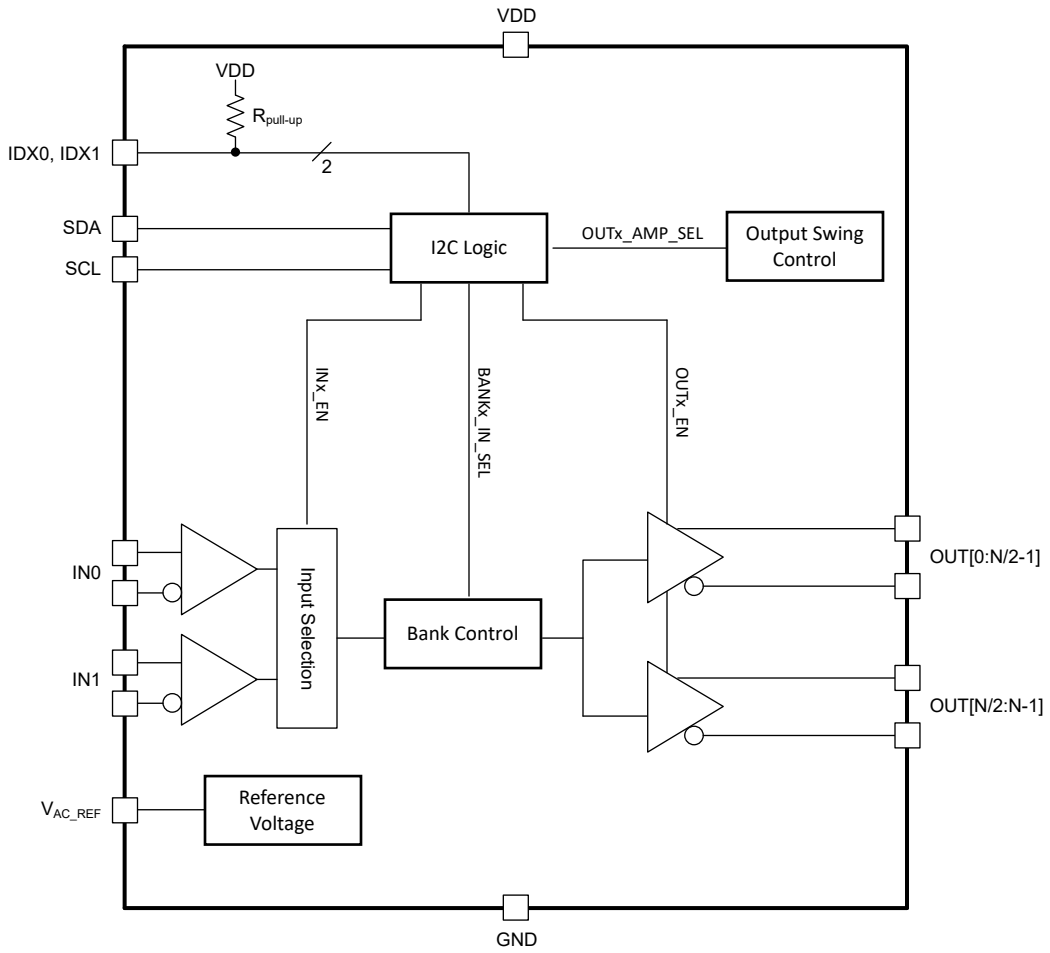

Copyright © 2023 Texas Instruments Incorporated

9.3 Feature Description

The LMK1D1208I is an I^{2}C-programmable, low-additive jitter, LVDS fan-out buffer that can generate up to eight copies of two selectable LVPECL, LVDS, HCSL, CML, or LVCMOS inputs. This feature-rich device allows the user to have flexibility on the configuration based on their application use-case.

9.3.1 Fail-Safe Input

The LMK1D120x family of devices is designed to support fail-safe input operation. This feature allows the user to drive the device inputs before VDD is applied without damaging the device. Refer to *Specifications* for more information on the maximum input supported by the device. The device also incorporates an input hysteresis, which prevents random oscillation in absence of an input signal, allowing the input pins to be left open.

9.3.2 Input Stage Configurability

The LMK1D1208I has an input stage that accepts up to two clock inputs and can be configured as either a 2:1 mux or as a dual bank. When configured as a 2:1 mux, the LMK1D1208I device can select one of the two clock inputs and then distribute it to the eight LVDS output pairs. In the dual bank mode, the LMK1D1208I can assign each clock input to fan out four LVDS output pairs per bank. Refer to the *Device Functional Modes* for how to configure the two input stages.

Unused inputs can be left floating to reduce overall component cost. Both AC and DC coupling schemes can be used with the LMK1D1208I to provide greater system flexibility.

9.3.3 Dual Output Bank

LMK1D1208I has eight LVDS output pairs which are grouped into two banks, each with four LVDS output pairs. The 表 9-1 outlines this mapping.

表 9-1. Output Bank Map

BANK	CLOCK OUTPUTS
0	OUT0, OUT1, OUT2, OUT3
1	OUT4, OUT5, OUT6, OUT7

9.3.4 I^{2}C

The I^{2}C control is used to configure the different features in the LMK1D1208I. These features include individual input and output channel enable or disable, input mux select in each bank, bank muting (setting bank outputs to logic low), and individual output amplitude control. The I^{2}C logic is also capable of fast mode where the frequency is 400 kHz.

9.3.4.1 I^{2}C Address Assignment

The I^{2}C address is assigned by the two pins, IDX0 and IDX1. Each IDX pin supports two levels allowing the LMK1D1208I to assume four different I^{2}C addresses. See 表 9-2 for address pin assignment.

表 9-2. I^{2}C Address Assignment

I^{2}C ADDRESS	IDX1	IDX0
0x68	L	L
0x69	L	H
0x6A	H	L
0x6B	H	H

9.3.5 LVDS Output Termination

TI recommends that unused outputs are terminated differentially with a 100-Ω resistor for optimum performance. Unterminated outputs are also okay, but this will result in a slight degradation in performance (Output AC common-mode V_{OS}) in the outputs being used.

图 9-1 and 图 9-2 show how the LMK1D1208I can be connected to LVDS receiver inputs with DC and AC coupling, respectively.

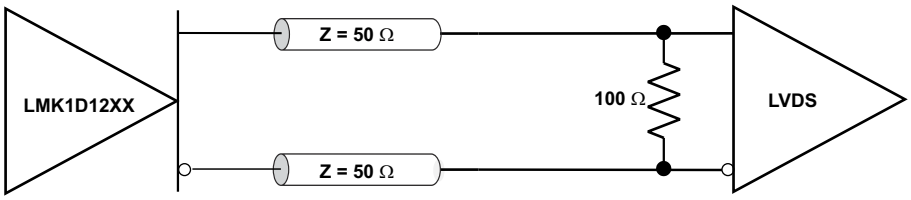

图 9-1. Output DC Termination

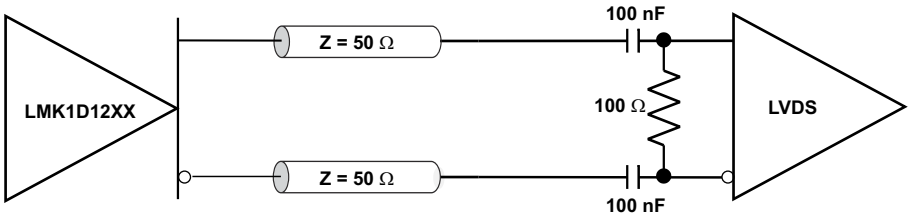

图 9-2. Output AC Termination (With the Receiver Internally Biased)

9.3.6 Input Termination

The LMK1D1208I inputs can be interfaced with LVDS, LVPECL, HCSL or LVCMOS drivers.

图 9-3 and 图 9-4 show how LVDS drivers can be connected to LMK1D1208I inputs with DC coupling and AC coupling, respectively.

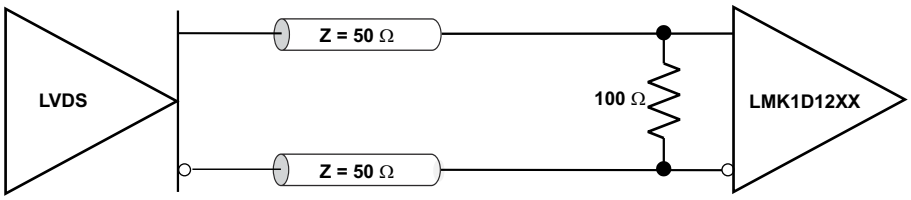

图 9-3. LVDS Clock Driver Connected to LMK1D1208I Input (DC-Coupled)

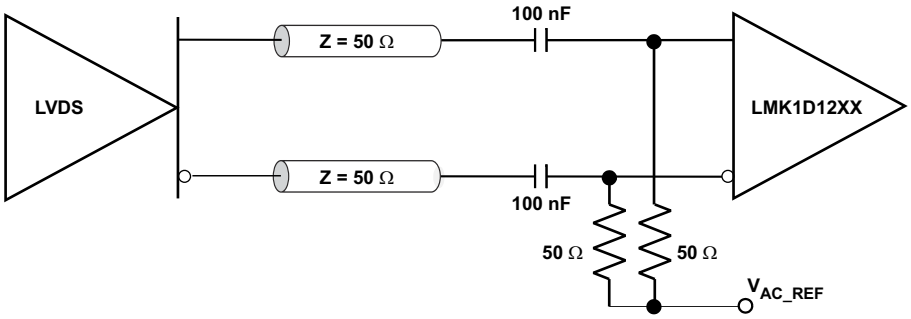

图 9-4. LVDS Clock Driver Connected to LMK1D1208I Input (AC-Coupled)

图 9-5 shows how to connect LVPECL inputs to the LMK1D1208I. The series resistors are required to reduce the LVPECL signal swing if the signal swing is >1.6 V_{PP}.

Copyright © 2023 Texas Instruments Incorporated

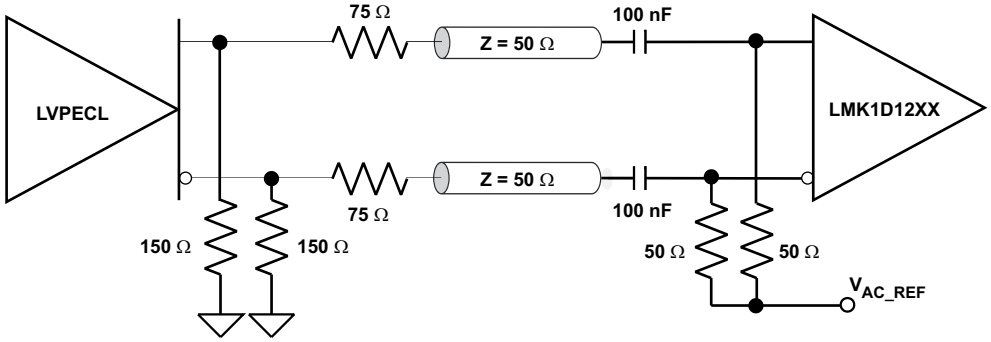

图 9-5. LVPECL Clock Driver Connected to LMK1D1208I Input

图 9-6 shows how to couple a LVCMOS clock input to the LMK1D1208I directly.

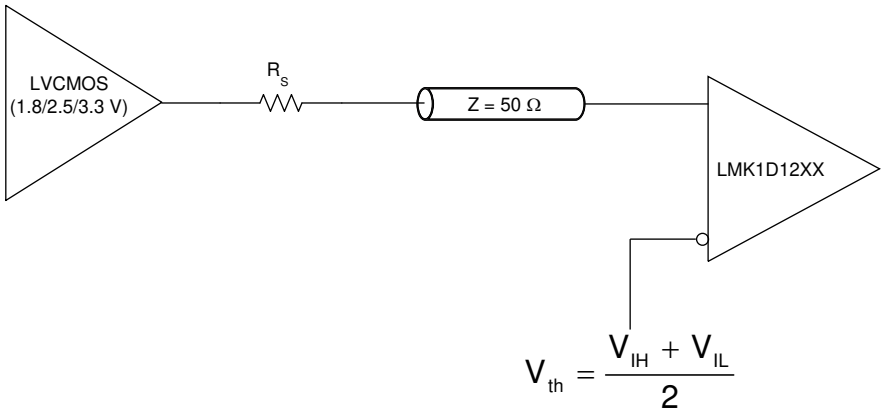

图 9-6. 1.8-V, 2.5-V, or 3.3-V LVCMOS Clock Driver Connected to LMK1D1208I Input

For unused input, TI recommends grounding both input pins (INP, INN) using 1-kΩ resistors.

9.4 Device Functional Modes

The outputs of Bank 0 and Bank 1 can be one of three options: logic low, buffered IN0, or buffered IN1. These output types should only be attained by maintaining the register setting combination outlined in 表 9-3. The LMK1D1208I registers must be programmed within these possible logic states to ensure proper device functionality. Using the device outside the intended logic can result in degraded performance.

表 9-3. Register Control Logic Table

BANKx OUTPUTS	BANKx_IN_SEL	BANKx_MUTE	IN0_EN	IN1_EN
Logic low	X	1	X	X
IN0	1	0	1	X
IN1	0	0	X	1

9.4.1 Input Enable Control

The LMK1D1208I allows for individual input channel enable or disable through the INx_EN register field. The inputs should be disabled when not in use to reduce the power consumption.

表 9-4 describes the control of this function. INx_EN is set by register 0x02 (R2). See *R2 Register* for more information on this register.

表 9-4. Input Control

INx_EN	ACTIVE CLOCK INPUT
0	INx_P, INx_N disabled
1	INx_P, INx_N enabled

9.4.2 Bank Input Selection

Bank 0 and Bank 1 can choose between the two inputs to fanout four LVDS output pairs each. In the 2:1 input mux mode, each bank must select the same clock input to output eight identical clocks. With the dual bank mode, each bank can select a different clock input to distribute both inputs separately; this is analogous to having two 1:4 buffers. When operating in dual bank mode, TI recommends that Bank 0 not select IN1 and Bank 1 not select IN0 to avoid crosstalk and degraded performance.

The BANKx_IN_SEL register field configures this function described in 表 9-5. BANKx_IN_SEL is set by register 0x02 (R2). See *R2 Register* for more information on this register.

表 9-5. Bank Input Selection

BANKx_IN_SEL	BANK CLOCK INPUT
0	BANKx selects IN1_P, IN1_N
1	BANKx selects IN0_P, IN0_N

9.4.3 Bank Mute Control

Each bank, Bank 0 or Bank 1, can be individually muted such that the bank outputs are set to logic low (OUTx_P is low and OUTx_N is high).

表 9-6 describes the control of this function. The BANKx_MUTE register field is set by register 0x02 (R2). See *R2 Register* for more information on this register.

表 9-6. Bank Mute Control

BANKx_MUTE	BANK CLOCK OUTPUTS
0	BANKx outputs selected INx
1	BANKx outputs logic low

Copyright © 2023 Texas Instruments Incorporated

9.4.4 Output Enable Control

The outputs of the LMK1D1208I can be individually enabled or disabled through the OUTx_EN register field. The disabled state of the outputs is high impedance as this reduces the power consumption and also prevents back-biasing of the devices connected to these outputs. Unused outputs should be disabled to eliminate the need for a termination resistor. In the case of enabled unused outputs, TI recommends a 100-Ω termination for optimal performance.

表 9-7 describes the control of this function. OUTx_EN is set by register 0x00 (R0). See *R0 Register* for more information on this register.

表 9-7. Output Control

OUTx_EN	CLOCK OUTPUTS
0	OUTx_P, OUTx_N disabled in Hi-Z state
1	OUTx_P, OUTx_N enabled

9.4.5 Output Amplitude Selection

The amplitude of the LMK1D1208I outputs can be individually programmed through the OUTx_AMP_SEL register field. The boosted LVDS swing mode can be used in applications which require a higher output swing for better noise performance (higher slew rate) or for swing requirements in the receiver that the standard LVDS swing cannot meet.

表 9-8 describes the control of this function. OUTx_AMP_SEL is set by register 0x01 (R1). See *R1 Register* for more information on this register.

表 9-8. Output Amplitude Selection Table

OUTx_AMP_SEL	OUTPUT AMPLITUDE (VOD)
0	Standard LVDS swing (350 mV)
1	Boosted LVDS swing (500 mV)

9.5 Programming

The LMK1D1208I uses I²C to program the states of its eight output drivers. See *I²C* for more information on the I²C features and address assignment, and *Register Maps* for the list of programmable registers.

表 9-9. Command Code Definition

BIT	DESCRIPTION
7	0 = *Block Read* or *Block Write* operation 1 = *Byte Read* or *Byte Write* operation
(6:0)	Register address for *Byte* operations, or starting register address for *Block*, operations

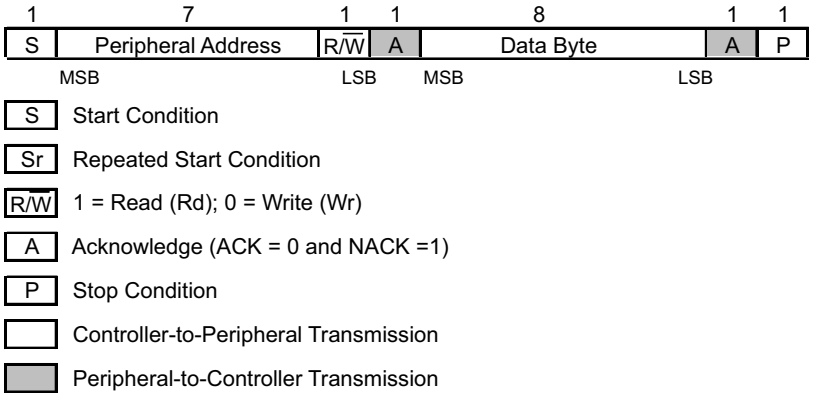

图 9-7. Generic Programming Sequence

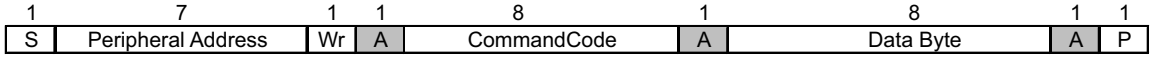

图 9-8. Byte Write Protocol

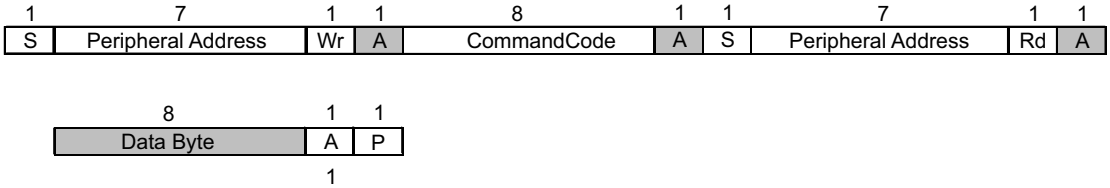

图 9-9. Byte Read Protocol

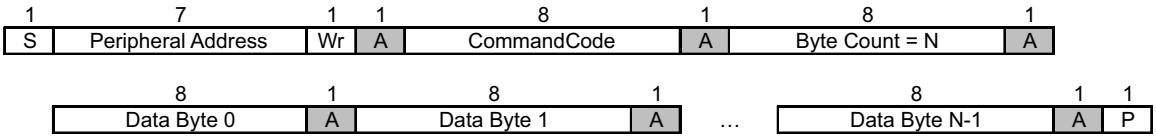

图 9-10. Block Write Protocol

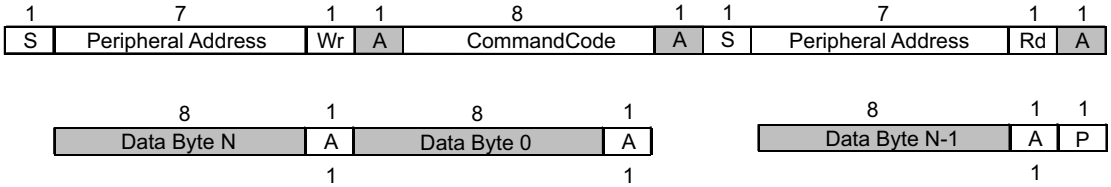

图 9-11. Block Read Protocol

Copyright © 2023 Texas Instruments Incorporated

9.6 Register Maps

9.6.1 LMK1D1208I Registers

表 9-10 lists the LMK1D1208I registers. All register locations not listed should be considered as reserved locations and the register contents should not be modified.

TI highly suggests that the user only operates within the logic states listed in 表 9-3 for optimum performance.

表 9-10. LMK1D1208I Registers

Address	Acronym	Register Fields	Section
0h	R0	Output Enable Control	Go
1h	R1	Output Amplitude Control	Go
2h	R2	Input Enable and Bank Setting Control	Go
5h	R5	Device/Revision Identification	Go
Eh	R14	I^2C Address Readback	Go

Complex bit access types are encoded to fit into small table cells. 表 9-11 shows the codes that are used for access types in this section.

表 9-11. LMK1D1208I Access Type Codes

Access Type	Code	Description
Read Type		
R	R	Read
Write Type		
W	W	Write
Reset or Default Value		
-n		Reset/default value in hexadecimal

9.6.1.1 R0 Register (Address = 0h) [reset = 0h]

R0 is shown in 表 9-12.

The R0 register contains bits that enable or disable individual output clock channels [7:0].

Return to the Summary Table.

表 9-12. R0 Register Field Descriptions

Bit	Field	Type	Reset	Description
7	OUT7_EN	R/W	0h	This bit controls the output enable signal for output channel OUT7_P/OUT7_N. 0h = Output Disabled (Hi-Z) 1h = Output Enabled
6	OUT6_EN	R/W	0h	This bit controls the output enable signal for output channel OUT6_P/OUT6_N. 0h = Output Disabled (Hi-Z) 1h = Output Enabled
5	OUT5_EN	R/W	0h	This bit controls the output enable signal for output channel OUT5_P/OUT5_N. 0h = Output Disabled (Hi-Z) 1h = Output Enabled

表 9-12. R0 Register Field Descriptions (continued)

Bit	Field	Type	Reset	Description
4	OUT4_EN	R/W	0h	This bit controls the output enable signal for output channel OUT4_P/OUT4_N. 0h = Output Disabled (Hi-Z) 1h = Output Enabled
3	OUT3_EN	R/W	0h	This bit controls the output enable signal for output channel OUT3_P/OUT3_N. 0h = Output Disabled (Hi-Z) 1h = Output Enabled
2	OUT2_EN	R/W	0h	This bit controls the output enable signal for output channel OUT2_P/OUT2_N. 0h = Output Disabled (Hi-Z) 1h = Output Enabled
1	OUT1_EN	R/W	0h	This bit controls the output enable signal for output channel OUT1_P/OUT1_N. 0h = Output Disabled (Hi-Z) 1h = Output Enabled
0	OUT0_EN	R/W	0h	This bit controls the output enable signal for output channel OUT0_P/OUT0_N. 0h = Output Disabled (Hi-Z) 1h = Output Enabled

9.6.1.2 R1 Register (Address = 1h) [reset = 0h]

R1 is shown in 表 9-13.

The R1 register contains bits that set the output amplitude to a standard or boosted LVDS swing.

Return to the Summary Table.

表 9-13. R1 Register Field Descriptions

Bit	Field	Type	Reset	Description
7	OUT7_AMP_SEL	R/W	0h	This bit sets the output amplitude for output channel OUT7_P/OUT7_N. 0h = Standard LVDS Swing (350 mV) 1h = Boosted LVDS Swing (500 mV)
6	OUT6_AMP_SEL	R/W	0h	This bit sets the output amplitude for output channel OUT6_P/OUT6_N. 0h = Standard LVDS Swing (350 mV) 1h = Boosted LVDS Swing (500 mV)
5	OUT5_AMP_SEL	R/W	0h	This bit sets the output amplitude for output channel OUT5_P/OUT5_N. 0h = Standard LVDS Swing (350 mV) 1h = Boosted LVDS Swing (500 mV)
4	OUT4_AMP_SEL	R/W	0h	This bit sets the output amplitude for output channel OUT4_P/OUT4_N. 0h = Standard LVDS Swing (350 mV) 1h = Boosted LVDS Swing (500 mV)
3	OUT3_AMP_SEL	R/W	0h	This bit sets the output amplitude for output channel OUT3_P/OUT3_N. 0h = Standard LVDS Swing (350 mV) 1h = Boosted LVDS Swing (500 mV)

Copyright © 2023 Texas Instruments Incorporated

表 9-13. R1 Register Field Descriptions (continued)

Bit	Field	Type	Reset	Description
2	OUT2_AMP_SEL	R/W	0h	This bit sets the output amplitude for output channel OUT2_P/OUT2_N. 0h = Standard LVDS swing (350 mV) 1h = Boosted LVDS swing (500 mV)
1	OUT1_AMP_SEL	R/W	0h	This bit sets the output amplitude for output channel OUT1_P/OUT1_N. 0h = Standard LVDS Swing (350 mV) 1h = Boosted LVDS Swing (500 mV)
0	OUT0_AMP_SEL	R/W	0h	This bit sets the output amplitude for output channel OUT0_P/OUT0_N. 0h = Standard LVDS Swing (350 mV) 1h = Boosted LVDS Swing (500 mV)

9.6.1.3 R2 Register (Address = 2h) [reset = F1h]

R2 is shown in 表 9-14.

The R2 register contains bits that enable/disable the input channels and control the banks.

Return to the Summary Table.

表 9-14. R2 Register Field Descriptions

Bit	Field	Type	Reset	Description
7	Reserved	R/W	1h	Register bit can be written to 1. Writing a different value than 1 will affect device functionality.
6	Reserved	R/W	1h	Register bit can be written to 1. Writing a different value than 1 will affect device functionality.
5	BANK1_IN_SEL	R/W	1h	This bit sets the input channel for Bank 1. 0h = IN1_P/IN1_N 1h = IN0_P/IN0_N
4	BANK0_IN_SEL	R/W	1h	This bit sets the input channel for Bank 0. 0h = IN1_P/IN1_N 1h = IN0_P/IN0_N
3	BANK1_MUTE	R/W	0h	This bit sets the outputs in Bank 1 to logic low level. 0h = INx_P/INx_N 1h = Logic low
2	BANK0_MUTE	R/W	0h	This bit sets the outputs in Bank 0 to logic low level. 0h = INx_P/INx_N 1h = Logic low
1	IN1_EN	R/W	0h	This bit controls the input enable signal for input channel IN1_P/IN1_N. 0h = Input Disabled (reduces power consumption) 1h = Input Enabled
0	IN0_EN	R/W	1h	This bit controls the input enable signal for input channel IN0_P/IN0_N. 0h = Input Disabled (reduces power consumption) 1h = Input Enabled

Copyright © 2023 Texas Instruments Incorporated

9.6.1.4 R5 Register (Address = 5h) [reset = 20h]

R5 is shown in 表 9-15.

The R5 register contains the silicon revision code and the device identification code.

Return to the Summary Table.

表 9-15. R5 Register Field Descriptions

Bit	Field	Type	Reset	Description
7:4	REV_ID	R	2h	These bits provide the silicon revision code.
3:0	DEV_ID	R	0h	These bits provide the device identification code.

9.6.1.5 R14 Register (Address = Eh) [reset = 0h]

R14 is shown in 表 9-16.

The R14 register contains the bits that report the current state of the I^2C address based on the IDX0 and IDX1 input pins.

Return to the Summary Table.

表 9-16. R14 Register Field Descriptions

Bit	Field	Type	Reset	Description
7:0	IDX_RB	R	0h	These bits report the I^2C address state.

Copyright © 2023 Texas Instruments Incorporated

10 Application and Implementation

备注

Information in the following applications sections is not part of the TI component specification, and TI does not warrant its accuracy or completeness. TI’s customers are responsible for determining suitability of components for their purposes, as well as validating and testing their design implementation to confirm system functionality.

10.1 Application Information

The LMK1D1208I is a low-additive jitter universal to LVDS fan-out buffer with two selectable inputs. The small package, low output skew, and low additive jitter make for a flexible device in demanding applications.

10.2 Typical Application

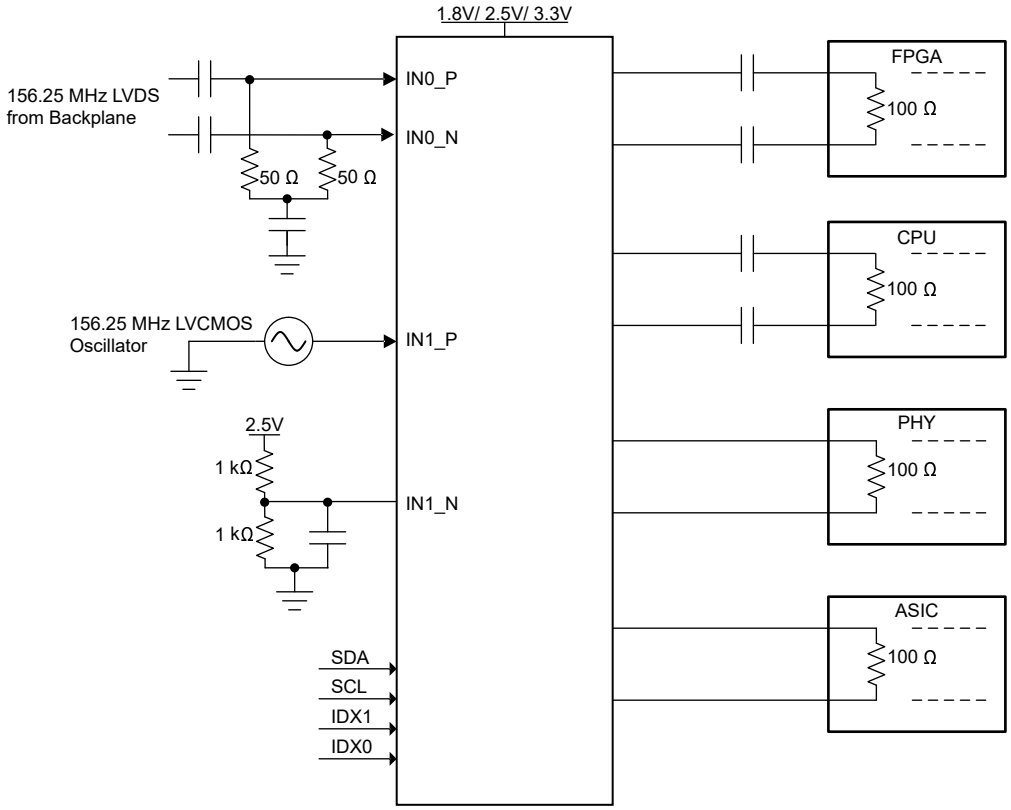

图 10-1. Fan-Out Buffer for Line Card Application

10.2.1 Design Requirements

The LMK1D1208I shown in 图 10-1 is configured to select two inputs: a 156.25-MHz LVDS clock from the backplane at IN0, or a secondary 156.25-MHz LVCMOS 2.5-V oscillator at IN1. The LVDS clock is AC-coupled and biased using the integrated reference voltage generator. A resistor divider is used to set the threshold voltage correctly for the LVCMOS clock. 0.1-µF capacitors are used to reduce noise on both V_{AC_REF} and IN1_N. Either input signal can be then fanned out to desired devices via register control. The configuration example is driving four LVDS receivers in a line card application with the following properties:

- The PHY device is capable of DC coupling with an LVDS driver such as the LMK1D1208I. This PHY device features internal termination so no additional components are required for proper operation
- The ASIC LVDS receiver features internal termination and operates at the same common-mode voltage as the LMK1D1208I. Again, no additional components are required.
- The FPGA requires external AC coupling, but has internal termination. 0.1-µF capacitors are placed to provide AC coupling. Similarly, the CPU is internally terminated, and requires only external AC-coupling capacitors.
- The unused outputs of the LMK1D1208I can be disabled by clearing the corresponding OUTx_EN register through I^2C. This results in a lower power consumption.

10.2.2 Detailed Design Procedure

See *Input Termination* for proper input terminations, dependent on single-ended or differential inputs.

See *LVDS Output Termination* for output termination schemes depending on the receiver application.

Unused outputs should be terminated differentially with a 100-Ω resistor or disabled through OUTx_EN register control (see 表 9-7) for optimum performance. Outputs may be left unterminated, but will result in slight degradation in performance (Output AC common-mode V_{OS}) in the outputs being used.

In this example, the PHY, ASIC, and FPGA or CPU require different schemes. Power-supply filtering and bypassing is critical for low-noise applications.

See *Power Supply Recommendations* for recommended filtering techniques. A reference layout is provided in *Low-Additive Jitter, Four LVDS Outputs Clock Buffer Evaluation Board* (SCAU043).

Copyright © 2023 Texas Instruments Incorporated

10.2.3 Application Curves

The following graphs show the low additive noise of the LMK1D1208I. The low noise 156.25-MHz source with 24-fs RMS jitter shown in 图 10-2 drives the LMK1D1208I, resulting in 46.4-fs RMS when integrated from 12 kHz to 20 MHz (图 10-3). The resultant additive jitter is a low 39.7-fs RMS for this configuration.

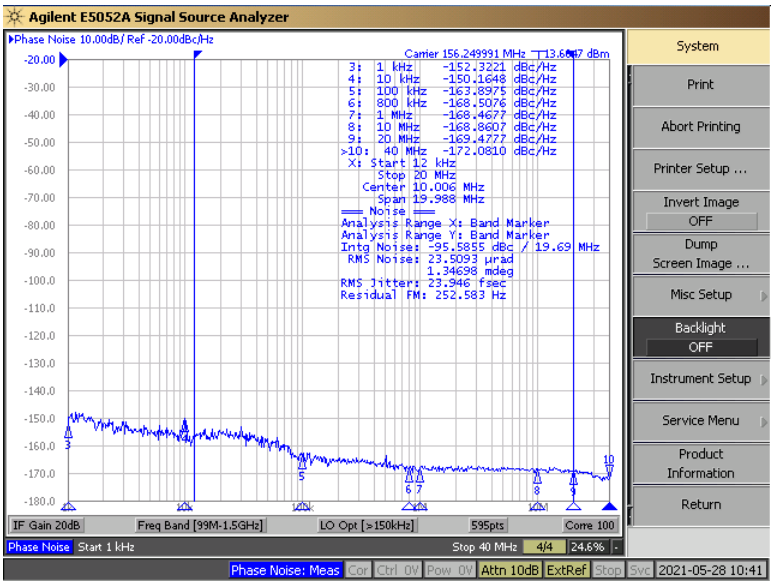

Reference signal is low-noise Rohde and Schwarz SMA100B

图 10-2. LMK1D1208I Reference Phase Noise, 156.25 MHz, 24-fs RMS (12 kHz to 20 MHz)

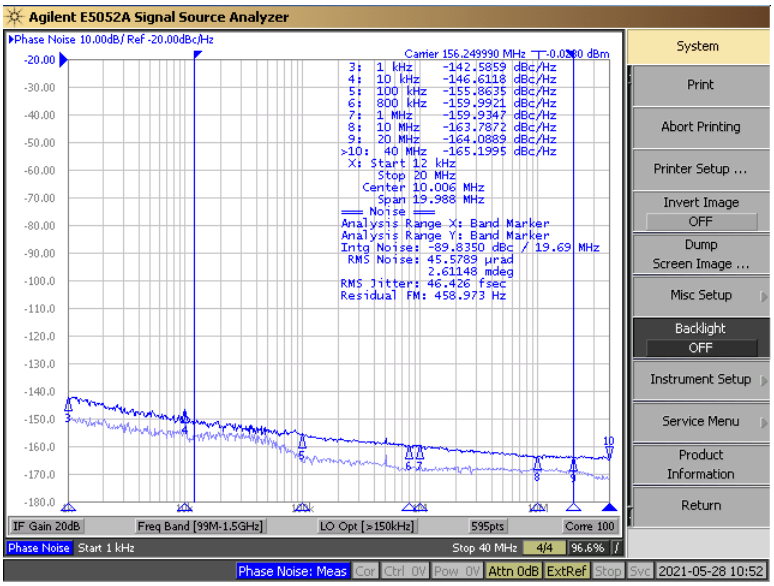

图 10-3. LMK1D1208I Output Phase Noise, 156.25 MHz, 46.4-fs RMS (12 kHz to 20 MHz)

图 10-4 shows the low close-in phase noise of the LMK1D1208I device. The LMK1D1208I has excellent flicker noise as a result of superior process technology and design. This enables their use for clock distribution in radar systems, medical imaging systems etc which require ultra-low close-in phase noise clocks.

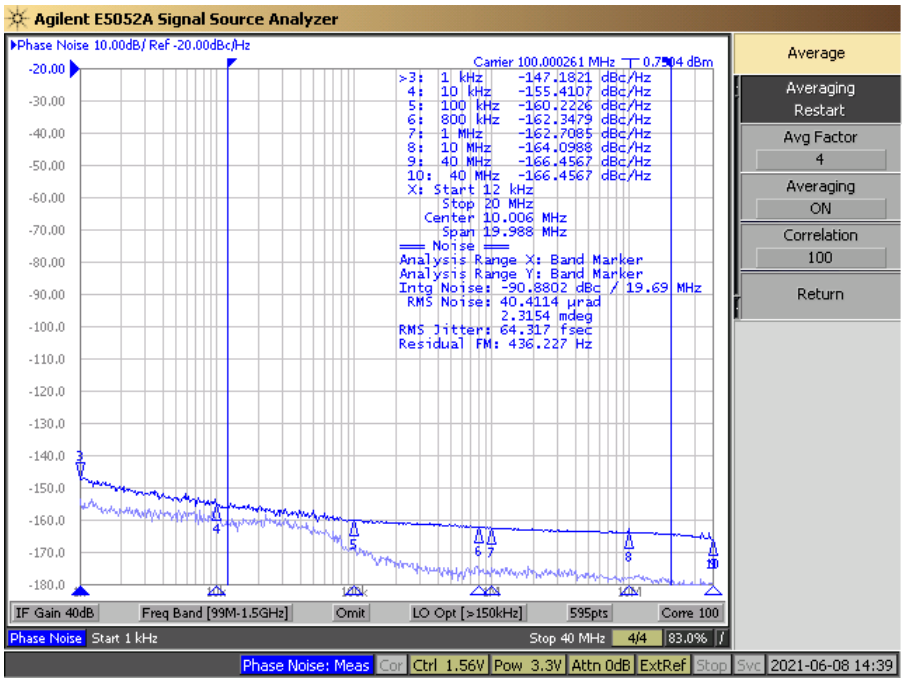

图 10-4. LMK1D1208I Output Phase Noise, 100 MHz, 1-kHz Offset: –147 dBc/Hz

10.3 Power Supply Recommendations

High-performance clock buffers are sensitive to noise on the power supply, which can dramatically increase the additive jitter of the buffer. Thus, it is essential to reduce noise from the system power supply, especially when jitter or phase noise is critical to applications.

Filter capacitors are used to eliminate the low-frequency noise from the power supply, where the bypass capacitors provide the low impedance path for high-frequency noise and guard the power-supply system against the induced fluctuations. These bypass capacitors also provide instantaneous current surges as required by the device and must have low equivalent series resistance (ESR). To properly use the bypass capacitors, they must be placed close to the power-supply pins and laid out with short loops to minimize inductance. TI recommends adding as many high-frequency (for example, 0.1-µF) bypass capacitors as there are supply pins in the package. TI recommends, but does not require, inserting a ferrite bead between the board power supply and the chip power supply that isolates the high-frequency switching noises generated by the clock driver. These beads prevent the switching noise from leaking into the board supply. Choose an appropriate ferrite bead with low DC resistance, because it is imperative to provide adequate isolation between the board supply and the chip supply, as well as to maintain a voltage at the supply pins that is greater than the minimum voltage required for proper operation.

图 10-5 shows this recommended power-supply decoupling method.

Copyright © 2023 Texas Instruments Incorporated

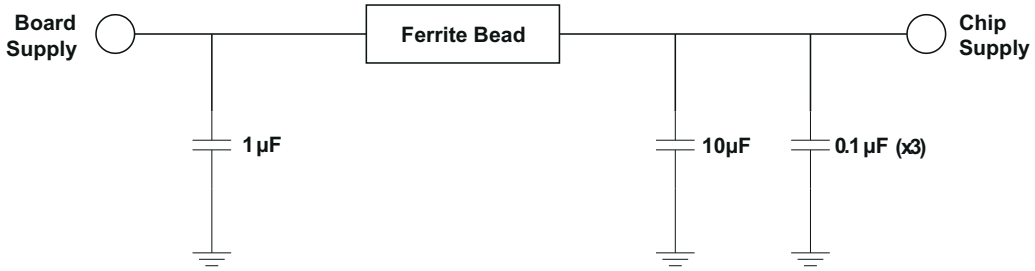

图 10-5. Power Supply Decoupling

10.4 Layout

10.4.1 Layout Guidelines

For reliability and performance reasons, the die temperature must be limited to a maximum of 135°C.

The device package has an exposed pad that provides the primary heat removal path to the printed circuit board (PCB). To maximize the heat dissipation from the package, a thermal landing pattern including multiple vias to a ground plane must be incorporated into the PCB within the footprint of the package. The thermal pad must be soldered down to ensure adequate heat conduction to of the package. 图 10-6 and 图 10-7 show the LMK1D1208I top and bottom PCB layer examples.

10.4.2 Layout Example

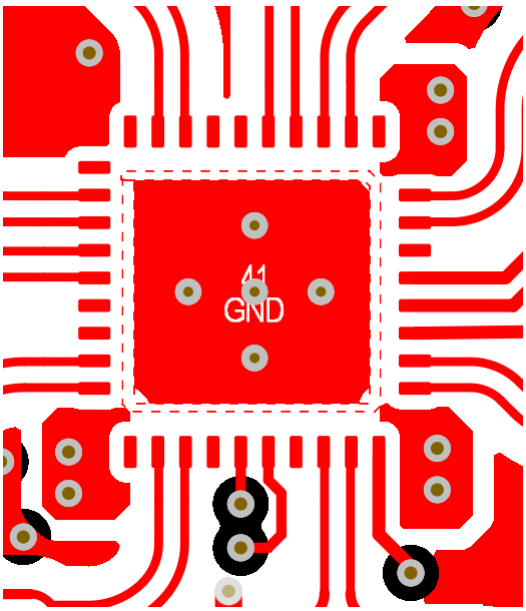

图 10-6. Recommended PCB Layout, Top Layer

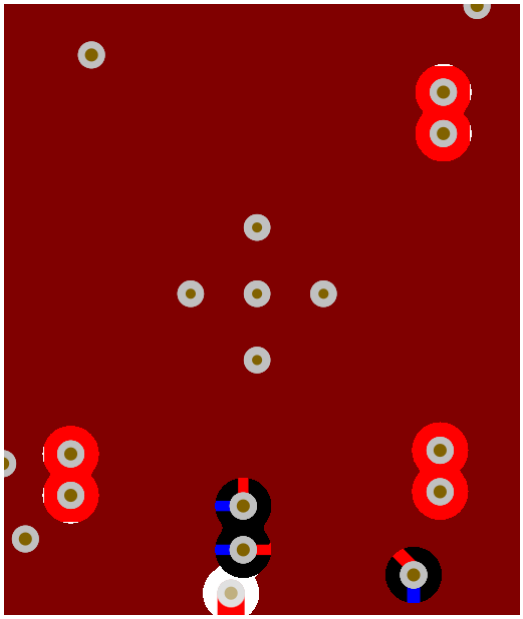

图 10-7. Recommended PCB Layout Bottom Layer

Copyright © 2023 Texas Instruments Incorporated

11 Device and Documentation Support

11.1 Documentation Support

11.1.1 Related Documentation

For related documentation see the following:

- Texas Instruments, *Power Consumption of LVPECL and LVDS* Analog Design Journal
- Texas Instruments, *Semiconductor and IC Package Thermal Metrics* application note
- Texas Instruments, *Using Thermal Calculation Tools for Analog Components* application note

11.2 接收文档更新通知

要接收文档更新通知，请导航至 ti.com 上的器件产品文件夹。点击*订阅更新* 进行注册，即可每周接收产品信息更改摘要。有关更改的详细信息，请查看任何已修订文档中包含的修订历史记录。

11.3 支持资源

TI E2E™ 支持论坛是工程师的重要参考资料，可直接从专家获得快速、经过验证的解答和设计帮助。搜索现有解答或提出自己的问题可获得所需的快速设计帮助。

链接的内容由各个贡献者“按原样”提供。这些内容并不构成 TI 技术规范，并且不一定反映 TI 的观点；请参阅 TI 的《使用条款》。

11.4 Trademarks

TI E2E™ is a trademark of Texas Instruments.
所有商标均为其各自所有者的财产。

11.5 静电放电警告

静电放电 (ESD) 会损坏这个集成电路。德州仪器 (TI) 建议通过适当的预防措施处理所有集成电路。如果不遵守正确的处理和安装程序，可能会损坏集成电路。

ESD 的损坏小至导致微小的性能降级，大至整个器件故障。精密的集成电路可能更容易受到损坏，这是因为非常细微的参数更改都可能会导致器件与其发布的规格不相符。

11.6 术语表

TI 术语表	本术语表列出并解释了术语、首字母缩略词和定义。

12 Mechanical, Packaging, and Orderable Information

The following pages include mechanical, packaging, and orderable information. This information is the most current data available for the designated devices. This data is subject to change without notice and revision of this document. For browser-based versions of this data sheet, refer to the left-hand navigation.

12.1 Package Option Addendum

Packaging Information

Orderable Device	Status(1)	Package Type	Package Drawing	Pins	Package Qty	Eco Plan(2)	Lead/Ball Finish(6)	MSL Peak Temp(3)	Op Temp (°C)	Device Marking(4) (5)
LMK1D1208IRHAR	ACTIVE	VQFN	RHA	40	2500	Green (RoHS& no Sb/Br)	NIPDAU	Level-2-260C-1 YEAR	-40 to 85	LMK1D1208I
LMK1D1208IRHAT	ACTIVE	VQFN	RHA	40	250	Green (RoHS& no Sb/Br)	NIPDAU	Level-2-260C-1 YEAR	-40 to 85	LMK1D1208I

(1) The marketing status values are defined as follows:

ACTIVE: Product device recommended for new designs.

LIFEBUY: TI has announced that the device will be discontinued, and a lifetime-buy period is in effect.

NRND: Not recommended for new designs. Device is in production to support existing customers, but TI does not recommend using this part in a new design.

PRE_PROD Unannounced device, not in production, not available for mass market, nor on the web, samples not available.

PREVIEW: Device has been announced but is not in production. Samples may or may not be available.

OBSOLETE: TI has discontinued the production of the device.

(2) Eco Plan - The planned eco-friendly classification: Pb-Free (RoHS), Pb-Free (RoHS Exempt), or Green (RoHS & no Sb/Br) - please check www.ti.com/productcontent for the latest availability information and additional product content details.

TBD: The Pb-Free/Green conversion plan has not been defined.

Pb-Free (RoHS): TI's terms "Lead-Free" or "Pb-Free" mean semiconductor products that are compatible with the current RoHS requirements for all 6 substances, including the requirement that lead not exceed 0.1% by weight in homogeneous materials. Where designed to be soldered at high temperatures, TI Pb-Free products are suitable for use in specified lead-free processes.

Pb-Free (RoHS Exempt): This component has a RoHS exemption for either 1) lead-based flip-chip solder bumps used between the die and package, or 2) lead-based die adhesive used between the die and leadframe. The component is otherwise considered Pb-Free (RoHS compatible) as defined above.

Green (RoHS & no Sb/Br): TI defines "Green" to mean Pb-Free (RoHS compatible), and free of Bromine (Br) and Antimony (Sb) based flame retardants (Br or Sb do not exceed 0.1% by weight in homogeneous material).

(3) MSL, Peak Temp. -- The Moisture Sensitivity Level rating according to the JEDEC industry standard classifications, and peak solder temperature.

(4) There may be additional marking, which relates to the logo, the lot trace code information, or the environmental category on the device.

(5) Multiple Device markings will be inside parentheses. Only one Device Marking contained in parentheses and separated by a "~" will appear on a device. If a line is indented then it is a continuation of the previous line and the two combined represent the entire Device Marking for that device.

(6) Lead/Ball Finish - Orderable Devices may have multiple material finish options. Finish options are separated by a vertical ruled line. Lead/Ball Finish values may wrap to two lines if the finish value exceeds the maximum column width.

Copyright © 2023 Texas Instruments Incorporated

Important Information and Disclaimer: The information provided on this page represents TI's knowledge and belief as of the date that it is provided. TI bases its knowledge and belief on information provided by third parties, and makes no representation or warranty as to the accuracy of such information. Efforts are underway to better integrate information from third parties. TI has taken and continues to take reasonable steps to provide representative and accurate information but may not have conducted destructive testing or chemical analysis on incoming materials and chemicals. TI and TI suppliers consider certain information to be proprietary, and thus CAS numbers and other limited information may not be available for release.

In no event shall TI's liability arising out of such information exceed the total purchase price of the TI part(s) at issue in this document sold by TI to Customer on an annual basis.

Copyright © 2023 Texas Instruments Incorporated

12.2 Tape and Reel Information

REEL DIMENSIONS

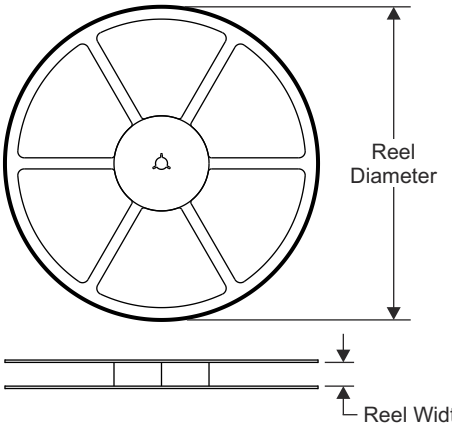

TAPE DIMENSIONS

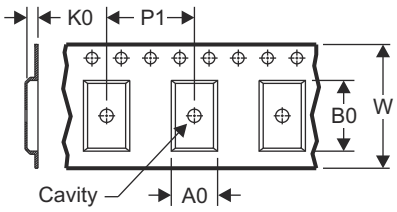

A0	Dimension designed to accommodate the component width
B0	Dimension designed to accommodate the component length
K0	Dimension designed to accommodate the component thickness
W	Overall width of the carrier tape
P1	Pitch between successive cavity centers

QUADRANT ASSIGNMENTS FOR PIN 1 ORIENTATION IN TAPE

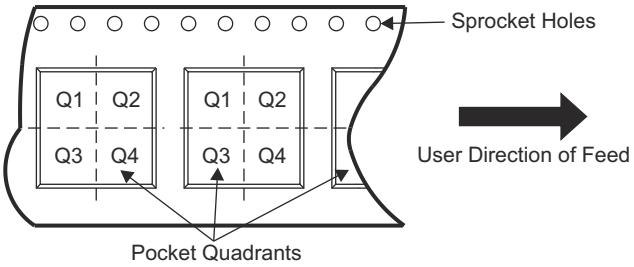

Device	Package Type	Package Drawing	Pins	SPQ	Reel Diameter (mm)	Reel Width W1 (mm)	A0 (mm)	B0 (mm)	K0 (mm)	P1 (mm)	W (mm)	Pin1 Quadrant
LMK1D1208IRHAR	VQFN	RHA	40	2500	330.0	16.4	6.3	6.3	1.1	12.0	13.3	Q2
LMK1D1208IRHAT	VQFN	RHA	40	250	180.0	16.4	6.3	6.3	1.1	12.0	13.3	Q2

Copyright © 2023 Texas Instruments Incorporated

TAPE AND REEL BOX DIMENSIONS

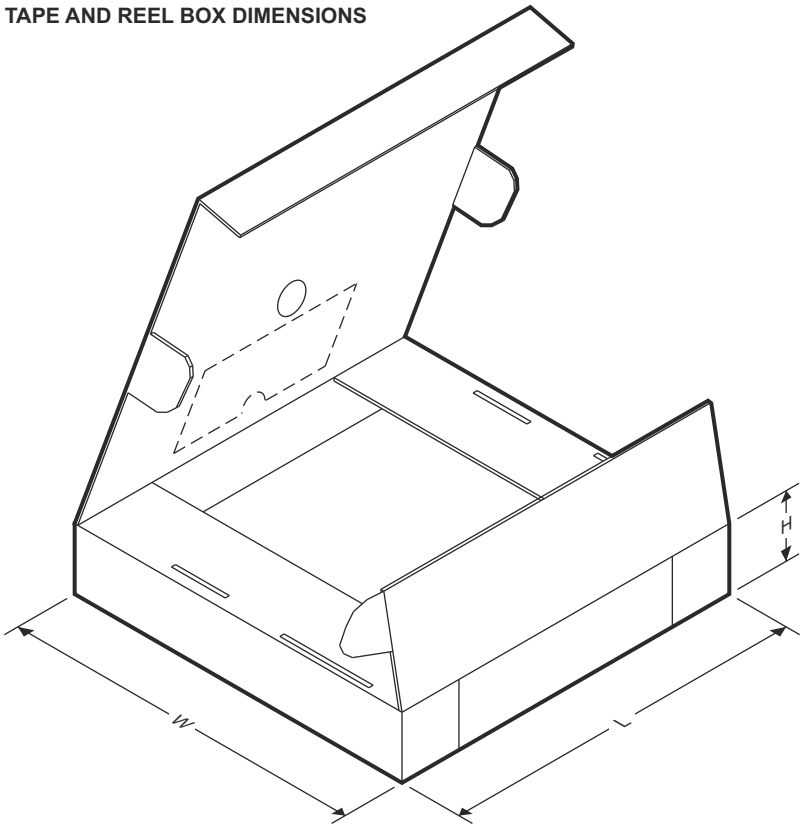

Device	Package Type	Package Drawing	Pins	SPQ	Length (mm)	Width (mm)	Height (mm)
LMK1D1208IRHAR	VQFN	RHA	40	2500	367.0	367.0	35.0
LMK1D1208IRHAT	VQFN	RHA	40	250	210.0	185.0	35.0

Copyright © 2023 Texas Instruments Incorporated

PACKAGING INFORMATION

Orderable part number	Status (1)	Material type (2)	Package | Pins	Package qty | Carrier	RoHS (3)	Lead finish/ Ball material (4)	MSL rating/ Peak reflow (5)	Op temp (°C)	Part marking (6)
LMK1D1208IRHAR	Active	Production	VQFN (RHA) | 40	2500 | LARGE T&R	Yes	NIPDAU	Level-1-260C-UNLIM	-40 to 105	LMK1D 1208I
LMK1D1208IRHAR.B	Active	Production	VQFN (RHA) | 40	2500 | LARGE T&R	Yes	NIPDAU	Level-1-260C-UNLIM	-40 to 105	LMK1D 1208I
LMK1D1208IRHAT	Active	Production	VQFN (RHA) | 40	250 | SMALL T&R	Yes	NIPDAU	Level-1-260C-UNLIM	-40 to 105	LMK1D 1208I
LMK1D1208IRHAT.B	Active	Production	VQFN (RHA) | 40	250 | SMALL T&R	Yes	NIPDAU	Level-1-260C-UNLIM	-40 to 105	LMK1D 1208I

(1) **Status:** For more details on status, see our product life cycle.

(2) **Material type:** When designated, preproduction parts are prototypes/experimental devices, and are not yet approved or released for full production. Testing and final process, including without limitation quality assurance, reliability performance testing, and/or process qualification, may not yet be complete, and this item is subject to further changes or possible discontinuation. If available for ordering, purchases will be subject to an additional waiver at checkout, and are intended for early internal evaluation purposes only. These items are sold without warranties of any kind.

(3) **RoHS values:** Yes, No, RoHS Exempt. See the TI RoHS Statement for additional information and value definition.

(4) **Lead finish/Ball material:** Parts may have multiple material finish options. Finish options are separated by a vertical ruled line. Lead finish/Ball material values may wrap to two lines if the finish value exceeds the maximum column width.

(5) **MSL rating/Peak reflow:** The moisture sensitivity level ratings and peak solder (reflow) temperatures. In the event that a part has multiple moisture sensitivity ratings, only the lowest level per JEDEC standards is shown. Refer to the shipping label for the actual reflow temperature that will be used to mount the part to the printed circuit board.

(6) **Part marking:** There may be an additional marking, which relates to the logo, the lot trace code information, or the environmental category of the part.

Multiple part markings will be inside parentheses. Only one part marking contained in parentheses and separated by a "~" will appear on a part. If a line is indented then it is a continuation of the previous line and the two combined represent the entire part marking for that device.

Important Information and Disclaimer: The information provided on this page represents TI's knowledge and belief as of the date that it is provided. TI bases its knowledge and belief on information provided by third parties, and makes no representation or warranty as to the accuracy of such information. Efforts are underway to better integrate information from third parties. TI has taken and continues to take reasonable steps to provide representative and accurate information but may not have conducted destructive testing or chemical analysis on incoming materials and chemicals. TI and TI suppliers consider certain information to be proprietary, and thus CAS numbers and other limited information may not be available for release.

In no event shall TI's liability arising out of such information exceed the total purchase price of the TI part(s) at issue in this document sold by TI to Customer on an annual basis.

TAPE AND REEL INFORMATION

REEL DIMENSIONS

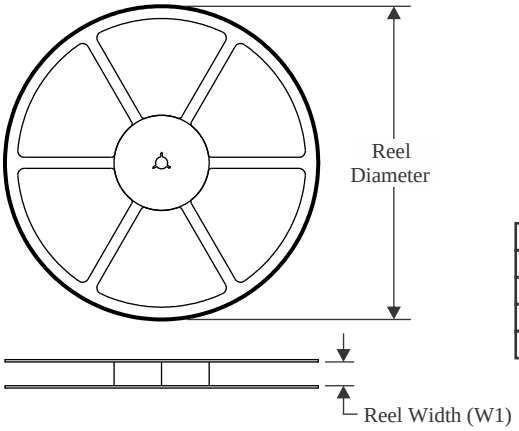

TAPE DIMENSIONS

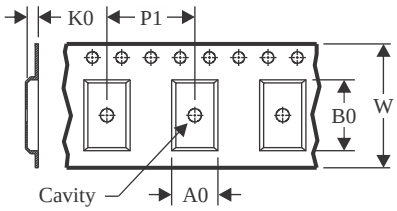

A0	Dimension designed to accommodate the component width
B0	Dimension designed to accommodate the component length
K0	Dimension designed to accommodate the component thickness
W	Overall width of the carrier tape
P1	Pitch between successive cavity centers

QUADRANT ASSIGNMENTS FOR PIN 1 ORIENTATION IN TAPE

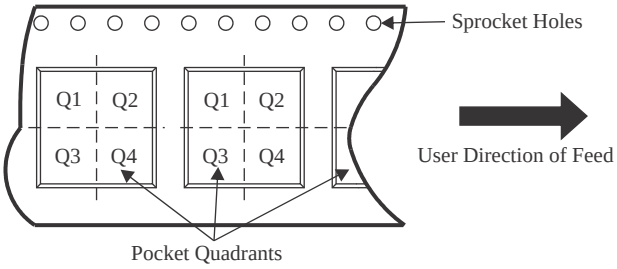

*All dimensions are nominal

Device	Package Type	Package Drawing	Pins	SPQ	Reel Diameter (mm)	Reel Width W1 (mm)	A0 (mm)	B0 (mm)	K0 (mm)	P1 (mm)	W (mm)	Pin1 Quadrant
LMK1D1208IRHAR	VQFN	RHA	40	2500	330.0	16.4	6.3	6.3	1.1	12.0	16.0	Q2
LMK1D1208IRHAT	VQFN	RHA	40	250	180.0	16.4	6.3	6.3	1.1	12.0	16.0	Q2

TAPE AND REEL BOX DIMENSIONS

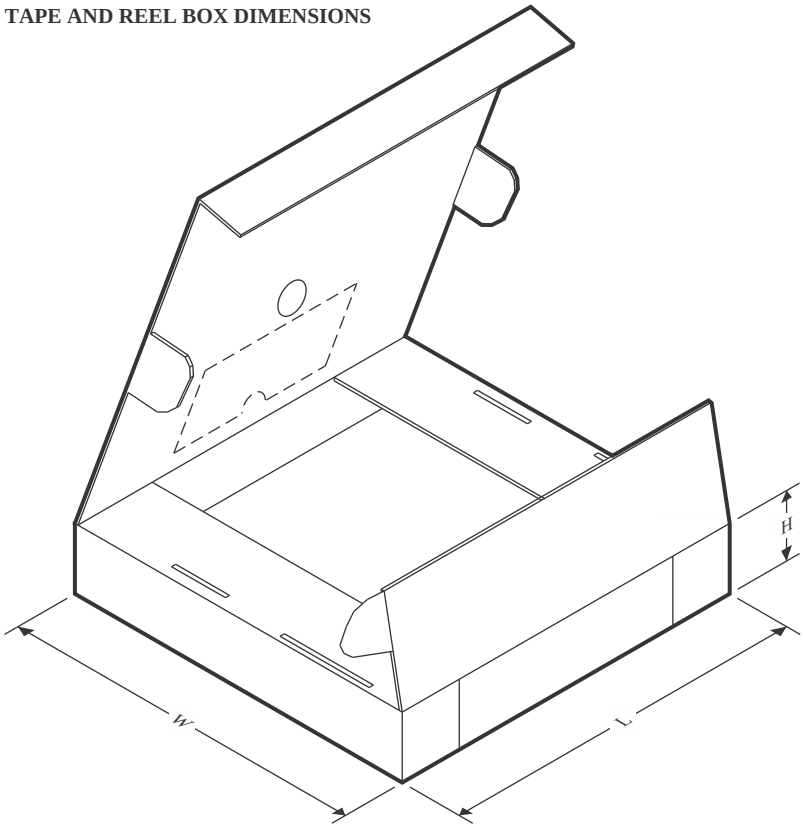

*All dimensions are nominal

Device	Package Type	Package Drawing	Pins	SPQ	Length (mm)	Width (mm)	Height (mm)
LMK1D1208IRHAR	VQFN	RHA	40	2500	360.0	360.0	36.0
LMK1D1208IRHAT	VQFN	RHA	40	250	210.0	185.0	35.0

GENERIC PACKAGE VIEW

RHA 40

VQFN - 1 mm max height

6 x 6, 0.5 mm pitch

PLASTIC QUAD FLATPACK - NO LEAD

This image is a representation of the package family, actual package may vary.
Refer to the product data sheet for package details.

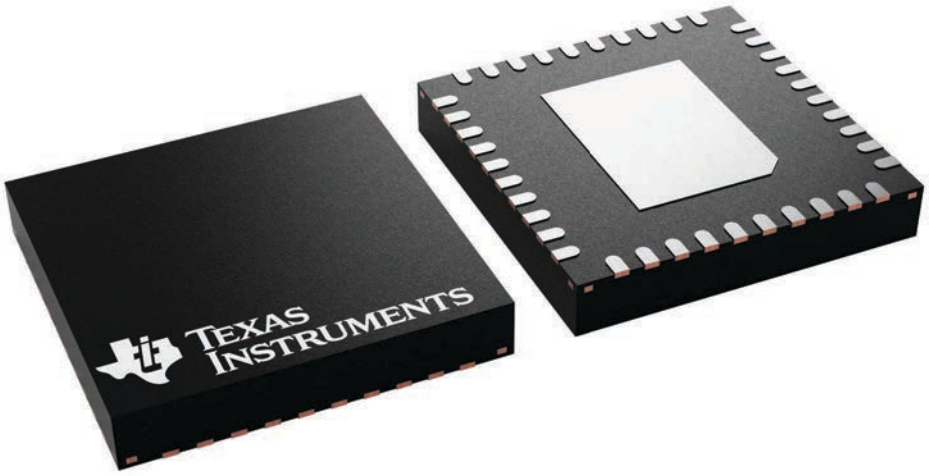

4225870/A

PACKAGE OUTLINE

RHA0040D

VQFN - 1 mm max height

PLASTIC QUAD FLATPACK - NO LEAD

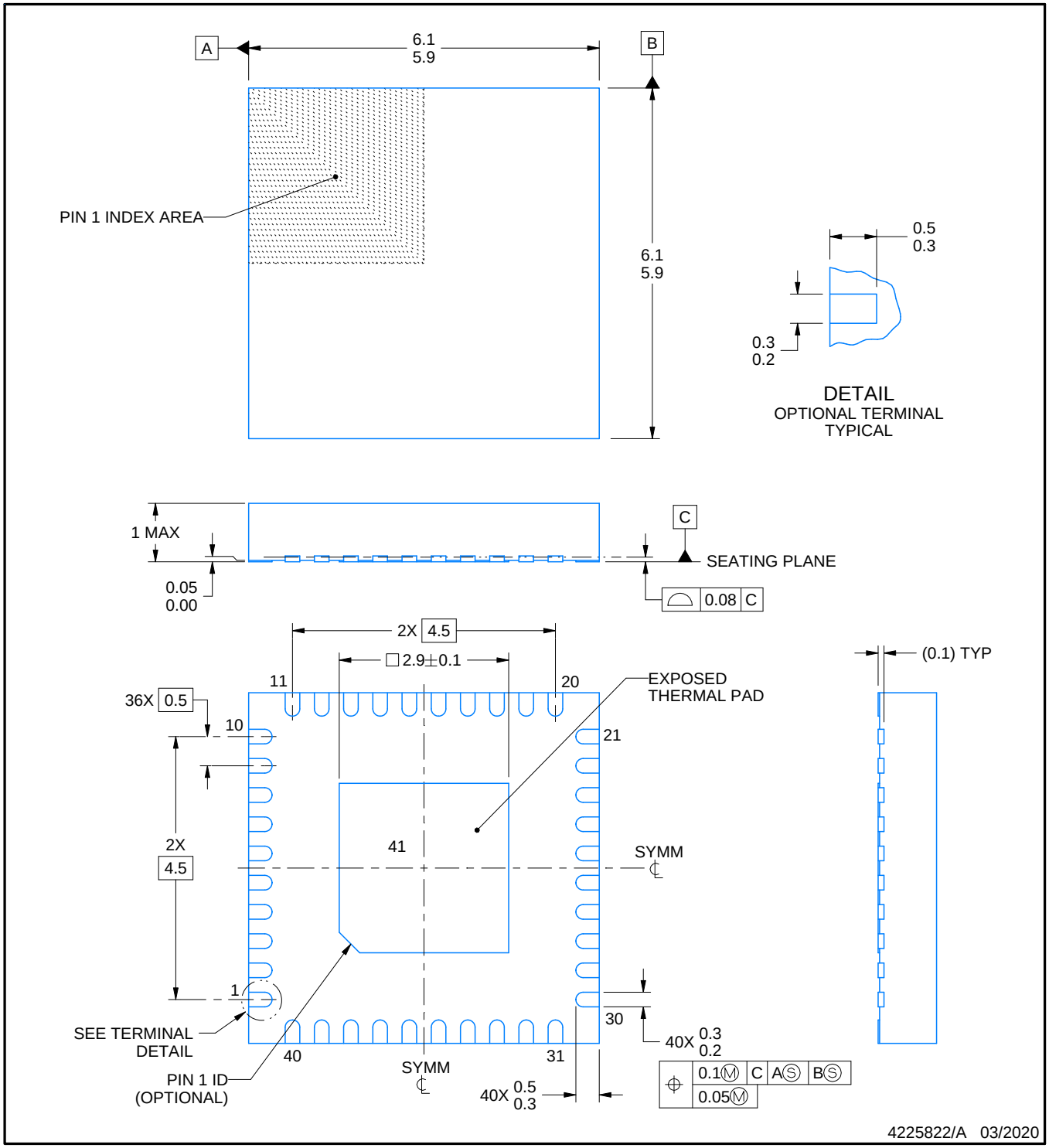

NOTES:

1. All linear dimensions are in millimeters. Any dimensions in parenthesis are for reference only. Dimensioning and tolerancing per ASME Y14.5M.
2. This drawing is subject to change without notice.
3. The package thermal pad must be soldered to the printed circuit board for thermal and mechanical performance.

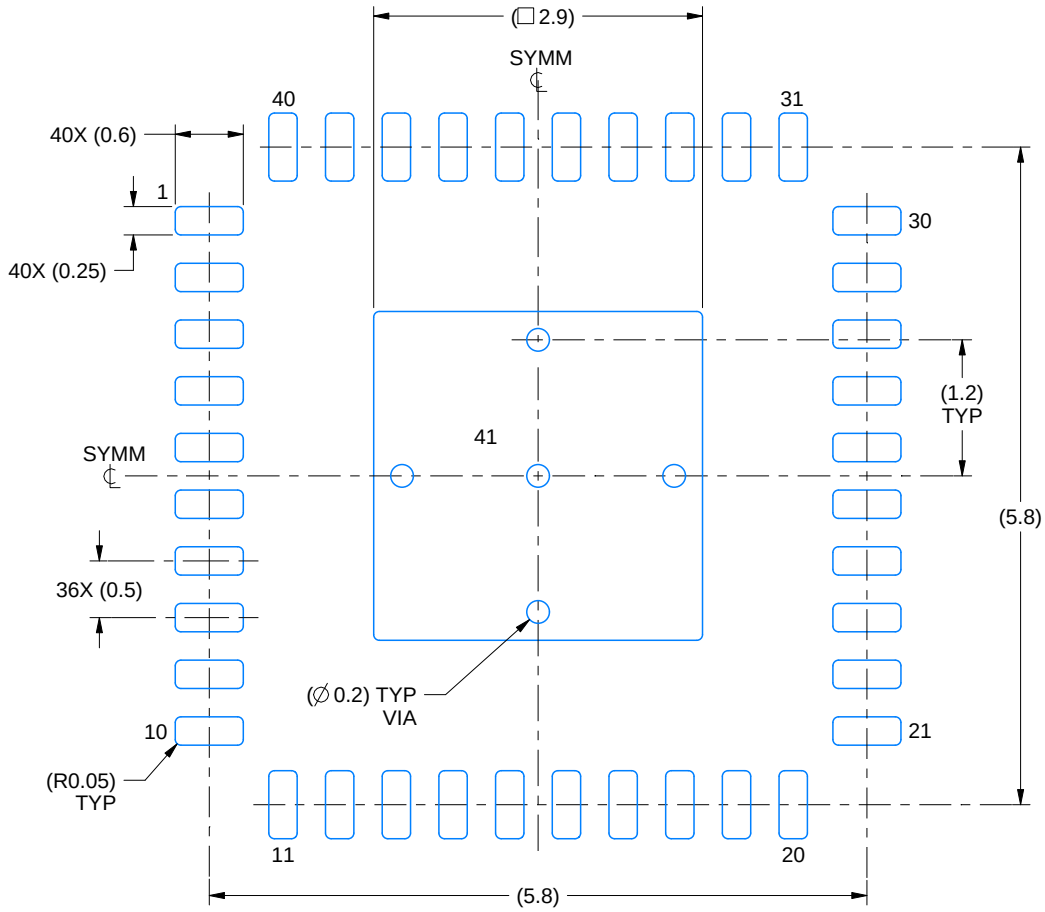

LAND PATTERN EXAMPLE
SCALE:15X

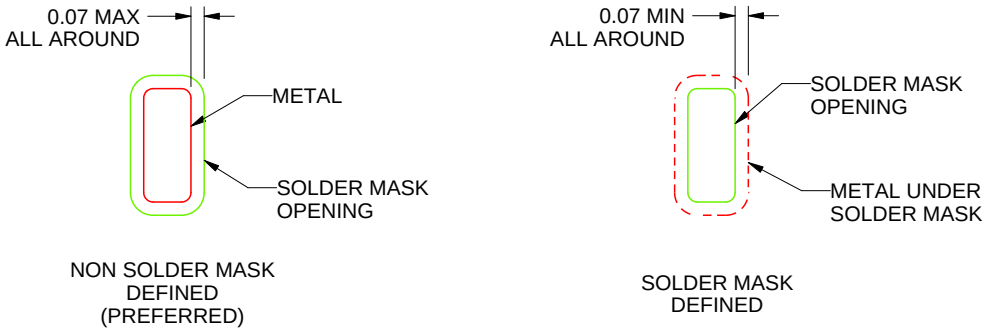

SOLDER MASK DETAILS

4225822/A 03/2020

NOTES: (continued)

4. This package is designed to be soldered to a thermal pad on the board. For more information, see Texas Instruments literature number SLUA271 (www.ti.com/lit/slua271).
5. Vias are optional depending on application, refer to device data sheet. If any vias are implemented, refer to their locations shown on this view.

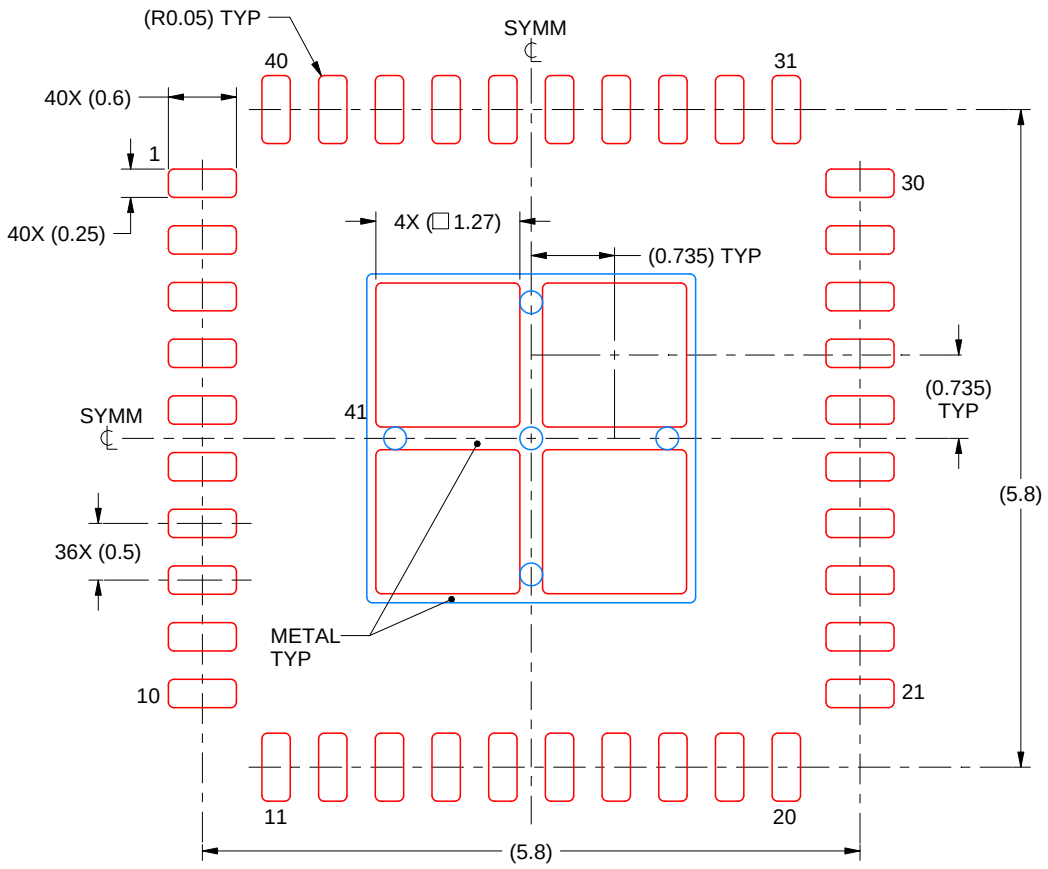

SOLDER PASTE EXAMPLE
BASED ON 0.125 mm THICK STENCIL

EXPOSED PAD 41:
76.46% PRINTED SOLDER COVERAGE BY AREA UNDER PACKAGE
SCALE:15X

4225822/A 03/2020

NOTES: (continued)

6. Laser cutting apertures with trapezoidal walls and rounded corners may offer better paste release. IPC-7525 may have alternate design recommendations.

PACKAGE OUTLINE

RHA0040E

VQFN - 1 mm max height

PLASTIC QUAD FLATPACK - NO LEAD

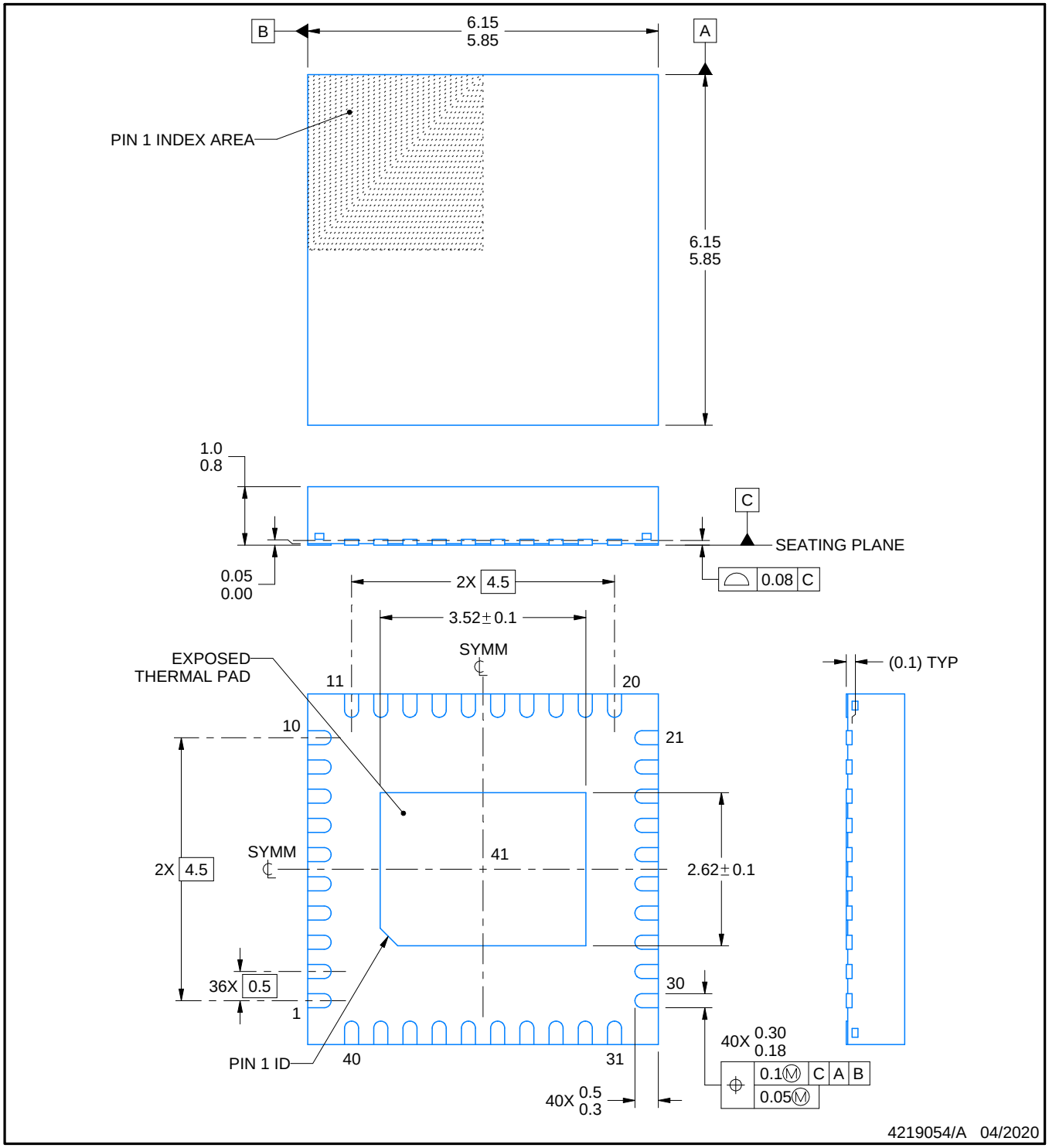

NOTES:

1. All linear dimensions are in millimeters. Any dimensions in parenthesis are for reference only. Dimensioning and tolerancing per ASME Y14.5M.
2. This drawing is subject to change without notice.
3. The package thermal pad must be soldered to the printed circuit board for thermal and mechanical performance.

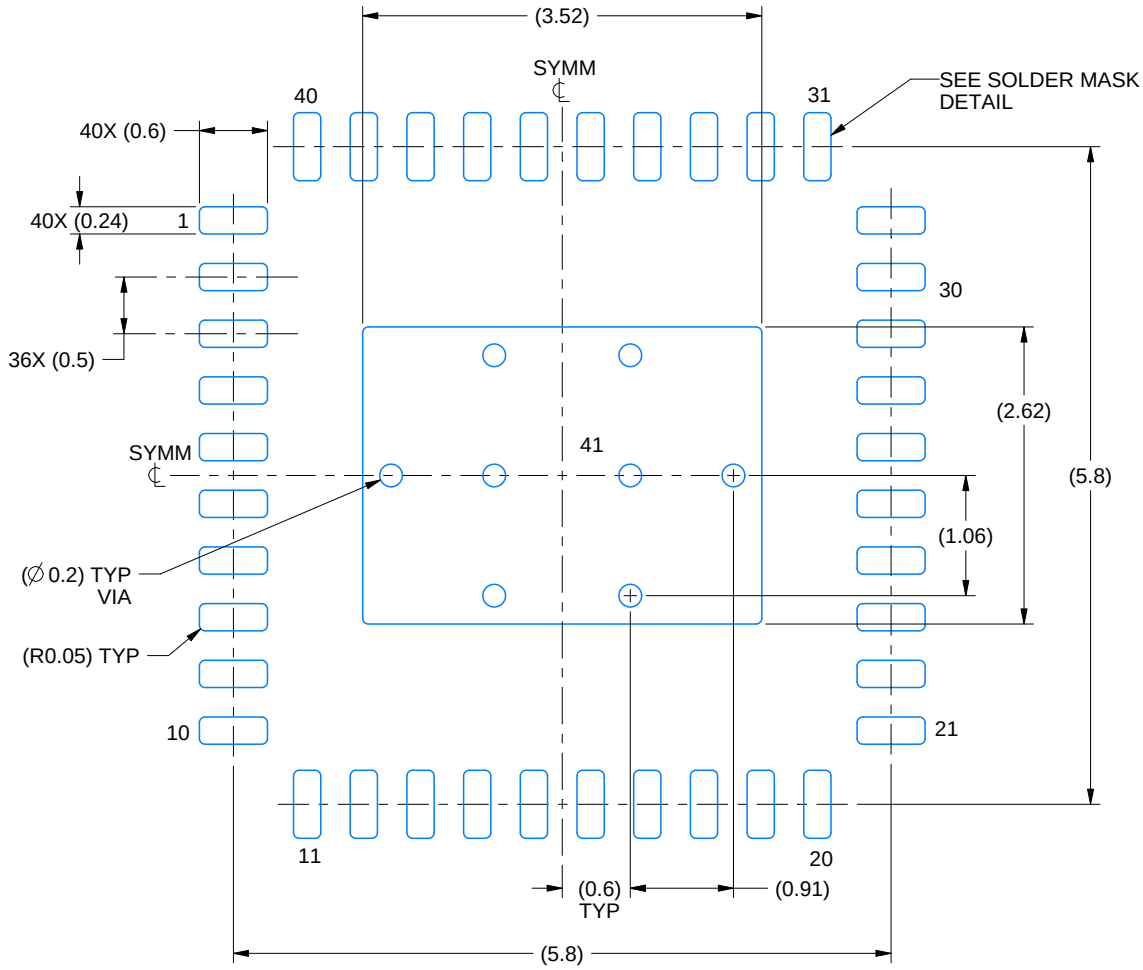

LAND PATTERN EXAMPLE
EXPOSED METAL SHOWN
SCALE: 15X

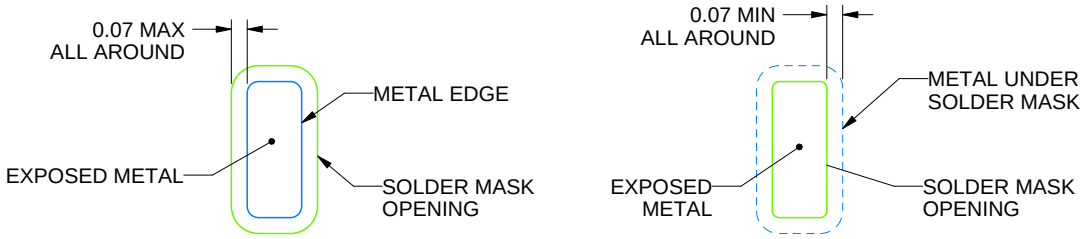

NON SOLDER MASK DEFINED (PREFERRED)

SOLDER MASK DEFINED

SOLDER MASK DETAILS

4219054/A 04/2020

NOTES: (continued)

4. This package is designed to be soldered to a thermal pad on the board. For more information, see Texas Instruments literature number SLUA271 (www.ti.com/lit/slua271).
5. Vias are optional depending on application, refer to device data sheet. If any vias are implemented, refer to their locations shown on this view. It is recommended that vias under paste be filled, plugged or tented.

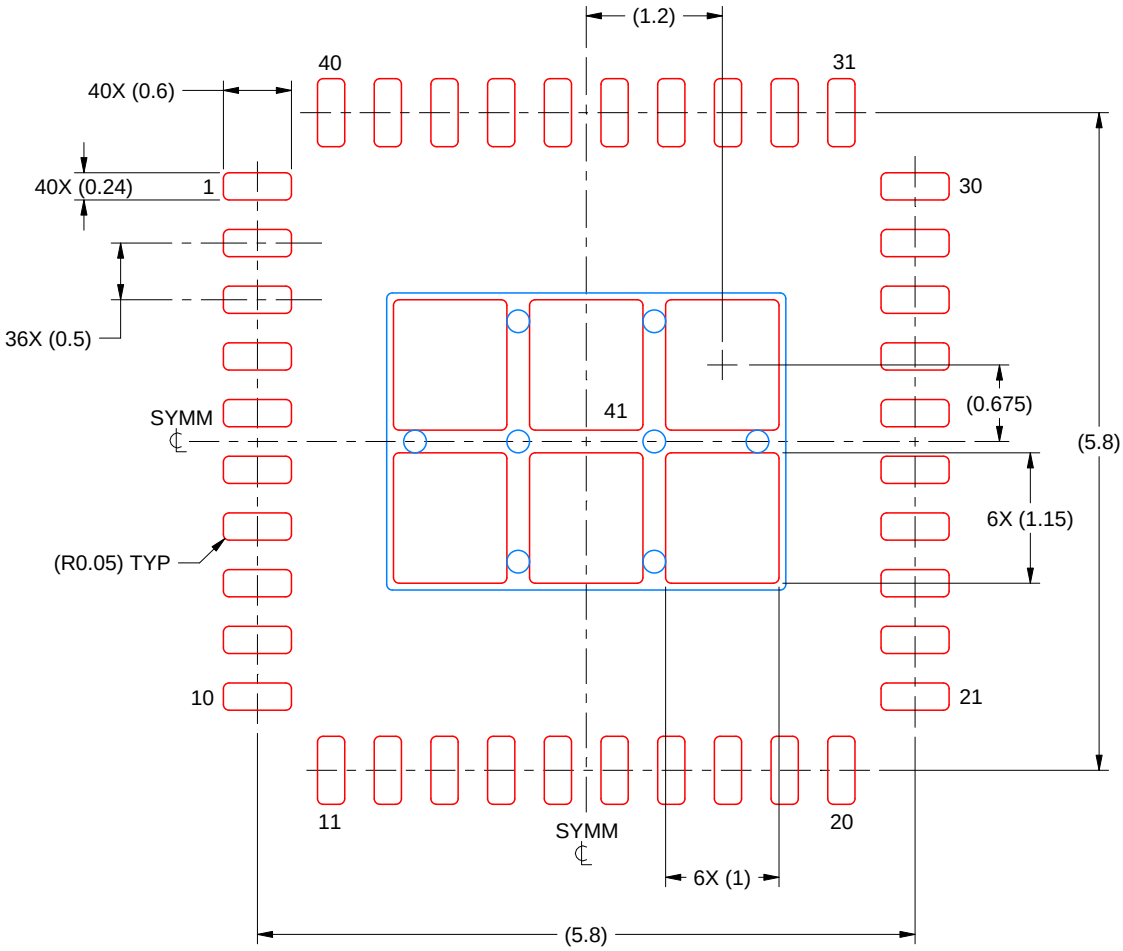

SOLDER PASTE EXAMPLE
BASED ON 0.125 MM THICK STENCIL
SCALE: 15X

EXPOSED PAD 41
75% PRINTED SOLDER COVERAGE BY AREA UNDER PACKAGE

4219054/A 04/2020

NOTES: (continued)

6. Laser cutting apertures with trapezoidal walls and rounded corners may offer better paste release. IPC-7525 may have alternate design recommendations.

重要通知和免责声明

TI“按原样”提供技术和可靠性数据（包括数据表）、设计资源（包括参考设计）、应用或其他设计建议、网络工具、安全信息和其他资源，不保证没有瑕疵且不做出任何明示或暗示的担保，包括但不限于对适销性、与某特定用途的适用性或不侵犯任何第三方知识产权的暗示担保。

这些资源可供使用 TI 产品进行设计的熟练开发人员使用。您将自行承担以下全部责任：(1) 针对您的应用选择合适的 TI 产品，(2) 设计、验证并测试您的应用，(3) 确保您的应用满足相应标准以及任何其他安全、安保法规或其他要求。

这些资源如有变更，恕不另行通知。TI 授权您仅可将这些资源用于研发本资源所述的 TI 产品的相关应用。严禁以其他方式对这些资源进行复制或展示。您无权使用任何其他 TI 知识产权或任何第三方知识产权。对于因您对这些资源的使用而对 TI 及其代表造成的任何索赔、损害、成本、损失和债务，您将全额赔偿，TI 对此概不负责。

TI 提供的产品受 TI 销售条款)、TI 通用质量指南 或 ti.com 上其他适用条款或 TI 产品随附的其他适用条款的约束。TI 提供这些资源并不会扩展或以其他方式更改 TI 针对 TI 产品发布的适用的担保或担保免责声明。 除非德州仪器 (TI) 明确将某产品指定为定制产品或客户特定产品，否则其产品均为按确定价格收入目录的标准通用器件。

TI 反对并拒绝您可能提出的任何其他或不同的条款。

版权所有 © 2026，德州仪器 (TI) 公司

最后更新日期：2025 年 10 月