1.8V, 700nA, Zerø-Crossover RAIL-TO-RAIL I/O OPERATIONAL AMPLIFIER

FEATURES

- ***nano*POWER:**
  - **OPA369: 800nA**
  - **OPA2369: 700nA/ch.**
- **LOW OFFSET VOLTAGE: 250μV**
  - **ZERO-CROSSOVER**
- **LOW OFFSET DRIFT: 0.4μV/°C**
- **DC PRECISION:**
  - **CMRR: 114dB**
  - **PSRR:106dB**
  - **AOL: 134dB**
- **GAIN-BANDWIDTH PRODUCT: 12kHz**
- **SUPPLY VOLTAGE: 1.8V to 5.5V**
- ***micro*SIZE PACKAGES:**
  - **SC70-5, SOT23-5, MSOP-8**

APPLICATIONS

- **BATTERY-POWERED INSTRUMENTS**
- **PORTABLE DEVICES**
- **MEDICAL INSTRUMENTS**
- **TEST EQUIPMENT**
- **LOW-POWER SENSOR SIGNAL CONDITIONING**

DESCRIPTION

The OPA369 and OPA2369 are ultra-low-power, low-voltage operational amplifiers from Texas Instruments designed especially for battery-powered applications.

The OPAx369 operates on a supply voltage as low as 1.8V and has true rail-to-rail operation that makes it useful for a wide range of applications. The *zerø-crossover* feature resolves the problem of input crossover distortion that becomes very prominent in low voltage (< 3V), rail-to-rail input applications.

In addition to *micro*size packages and very low quiescent current, the OPAx369 features 12kHz bandwidth, low offset drift (1.75μV/°C, max), and low noise 3.6μV_{PP} (0.1Hz to 10Hz).

The OPA369 (single version) is offered in an SC70-5 package. The OPA2369 (dual version) comes in both MSOP-8 and SOT23-8 packages.

OFFSET VOLTAGE vs COMMON-MODE VOLTAGE
(V_S = 1.8V)

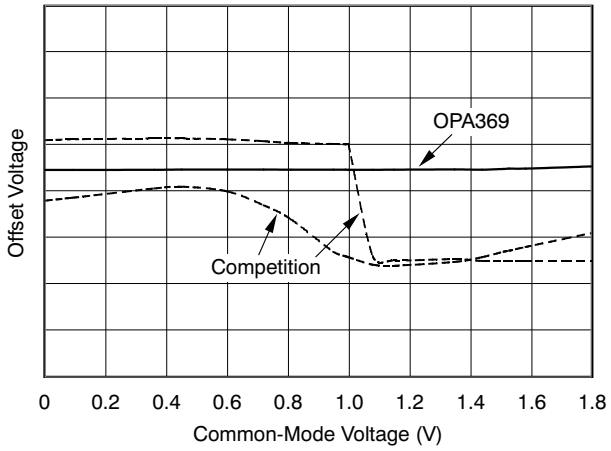

Please be aware that an important notice concerning availability, standard warranty, and use in critical applications of Texas Instruments semiconductor products and disclaimers thereto appears at the end of this data sheet.

All trademarks are the property of their respective owners.

PRODUCTION DATA information is current as of publication date. Products conform to specifications per the terms of the Texas Instruments standard warranty. Production processing does not necessarily include testing of all parameters.

Copyright © 2007–2008, Texas Instruments Incorporated

This integrated circuit can be damaged by ESD. Texas Instruments recommends that all integrated circuits be handled with appropriate precautions. Failure to observe proper handling and installation procedures can cause damage.

ESD damage can range from subtle performance degradation to complete device failure. Precision integrated circuits may be more susceptible to damage because very small parametric changes could cause the device not to meet its published specifications.

ABSOLUTE MAXIMUM RATINGS(1)

Over operating free-air temperature range (unless otherwise noted).

			VALUE	UNIT
Supply Voltage		V_S = (V+) – (V–)	+7	V
Single Input Terminals	Voltage(2)		(V–) –0.5 to (V+) + 0.5	V
	Current(2)		±10	mA
Output Short-Circuit(3)			Continuous	
Ambient Operating Temperature			–55 to +125	°C
Ambient Storage Temperature			–65 to +150	°C
Junction Temperature		T_J	+150	°C
ESD Ratings	Human Body Model	(HBM)	4000	V
	Charged Device Model	(CDM)	1000	V
	Machine Model	(MM)	200	V

(1) Stresses above these ratings may cause permanent damage. Exposure to absolute maximum conditions for extended periods may degrade device reliability. These are stress ratings only, and functional operation of the device at these or any other conditions beyond those specified is not supported.
(2) Input terminals are diode-clamped to the power-supply rails. Input signals that can swing more than 0.5V beyond the supply rails should be current limited to 10mA or less.
(3) Short-circuit to V_S/2, one amplifier per package.

PACKAGE/ORDERING INFORMATION(1)

PRODUCT	PACKAGE-LEAD	PACKAGE DESIGNATOR	PACKAGE MARKING
OPA369	SC70-5	DCK	CJS
OPA2369	MSOP-8	DGK	OCCQ
	SOT23-8	DCN	OCBQ

(1) For the most current package and ordering information see the Package Option Addendum at the end of this document, or see the TI web site at www.ti.com.

PIN CONFIGURATIONS

OPA369
SC70-5
(TOP VIEW)

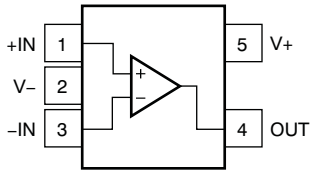

OPA2369
MSOP-8, SOT23-8
(TOP VIEW)

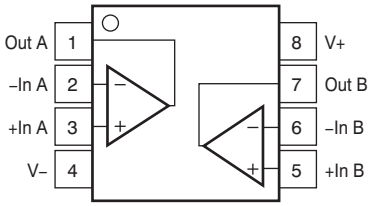

Copyright © 2007–2008, Texas Instruments Incorporated

ELECTRICAL CHARACTERISTICS: V_S = +1.8V to +5.5V

BOLDFACE limits apply over the specified temperature range, T_A = –40°C to +85°C.
At T_A = +25°C, and R_L = 100kΩ connected to V_S/2, unless otherwise noted.

PARAMETER		CONDITIONS	OPA369, OPA2369 MIN	TYP	MAX	UNIT
OFFSET VOLTAGE						
Input Offset Voltage	V_{OS}			250	750	µV
over Temperature					**1**	**mV**
Drift	**dV_{OS}/dT**			**0.4**	**1.75**	**µV/°C**
vs Power Supply	**PSRR**	**V_S = 1.8V to 5.5V**		**5**	**20**	**µV/V**
Channel Separation		dc		140		dB
		f = 1kHz		120		dB
INPUT VOLTAGE RANGE						
Common-Mode Voltage Range	V_{CM}		(V–)		(V+)	V
Common-Mode Rejection Ratio	CMRR	(V–) ≤ V_{CM} ≤ (V+)	100	114		dB
over Temperature		**(V–) ≤ V_{CM} ≤ (V+)**	**90**			**dB**
INPUT BIAS CURRENT						
Input Bias Current	I_B			10	50	pA
over Temperature				See Figure 16		**pA**
Input Offset Current	I_{OS}			10	50	pA
INPUT IMPEDANCE						
Differential				10^{13} || 3		Ω || pF
Common-Mode				10^{13} || 6		Ω || pF
NOISE						
Input Voltage Noise		f = 0.1Hz to 10Hz		3.6		$µV_{PP}$
Input Voltage Noise Density		f = 100Hz		220		nV/√Hz
		f = 1kHz		290		nV/√Hz
Current Noise Density		f = 1kHz		1		fA/√Hz
OPEN-LOOP GAIN						
Open-Loop Voltage Gain	A_{OL}	100mV ≤ V_O ≤ (V+)–100mV, R_L = 100kΩ	114	134		dB
Over Temperature		**100mV ≤ V_O ≤ (V+)–100mV, R_L = 100kΩ**	**100**			**dB**
		500mV ≤ V_O ≤ (V+)–500mV, R_L = 10kΩ	114	134		dB
Over Temperature		**500mV ≤ V_O ≤ (V+)–500mV, R_L = 10kΩ**	**90**			**dB**
OUTPUT						
Voltage Output Swing from Rail		**R_L = 100kΩ**			**10**	**mV**
		R_L = 10kΩ			**25**	**mV**
Short-Circuit Current	I_{SC}			10		mA
Capacitive Load Drive	C_{LOAD}			See Figure 20		pF
FREQUENCY RESPONSE						
Gain-Bandwidth Product	GBW			12		kHz
Slew Rate	SR	G = +1		0.005		V/µs
Overload Recovery Time		V_{IN} × Gain > V_S		250		µs

Copyright © 2007–2008, Texas Instruments Incorporated

ELECTRICAL CHARACTERISTICS: V_S = +1.8V to +5.5V (continued)

BOLDFACE limits apply over the specified temperature range, T_A = –40°C to +85°C.
At T_A = +25°C, and R_L = 100kΩ connected to V_S/2, unless otherwise noted.

PARAMETER		CONDITIONS	OPA369, OPA2369			UNIT
			MIN	TYP	MAX	
POWER SUPPLY						
Specified Voltage	V_S		1.8		5.5	V
Quiescent Current	I_Q	I_{OUT} = 0A				
OPA369				0.8	1.2	µA
OPA2369 (per channel)				0.7	1	µA
Over Temperature						
OPA369					**1.45**	**µA**
OPA2369 (per channel)					**1.25**	**µA**
TEMPERATURE RANGE						
Specified Range		T_A	–40		+85	°C
Operating Range		T_A	–55		+125	°C
Thermal Resistance	θ_{JA}					
SC70				250		°C/W
SOT23				223		°C/W
MSOP				252		°C/W

Copyright © 2007–2008, Texas Instruments Incorporated

TYPICAL CHARACTERISTICS

At T_A = +25°C, V_S = 5V, and R_L = 100kΩ connected to V_S/2, unless otherwise noted.

OFFSET VOLTAGE PRODUCTION DISTRIBUTION

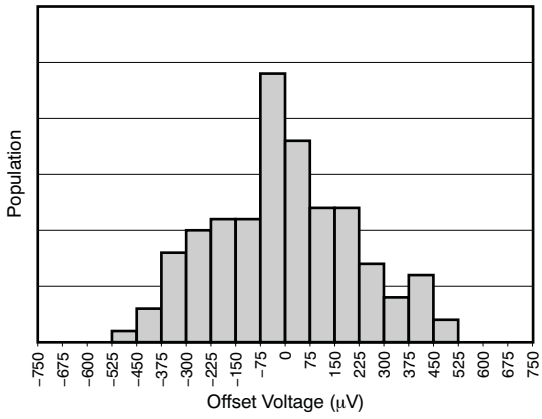

Figure 1.

OFFSET VOLTAGE DRIFT PRODUCTION DISTRIBUTION

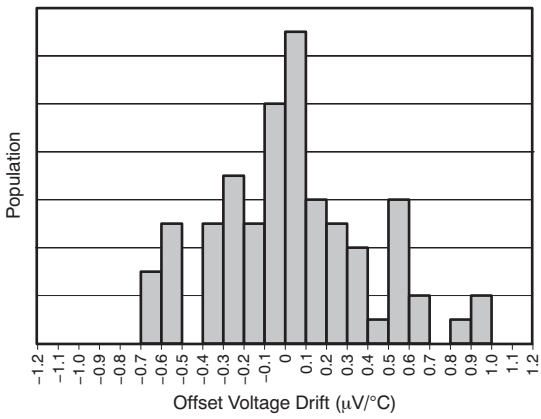

Figure 2.

OFFSET VOLTAGE vs TEMPERATURE

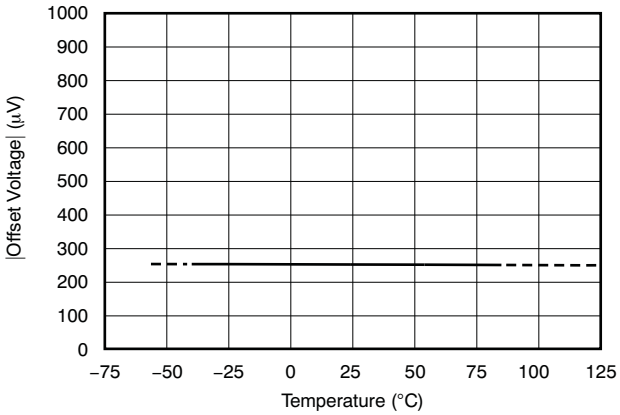

Figure 3.

NORMALIZED OFFSET VOLTAGE vs COMMON-MODE VOLTAGE

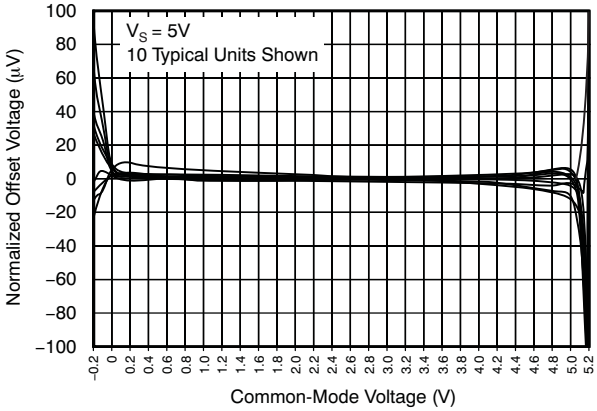

Figure 4.

0.1Hz to 10Hz NOISE

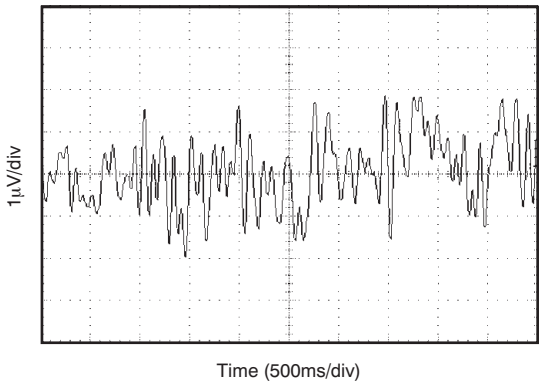

Figure 5.

INPUT-REFERRED VOLTAGE NOISE vs FREQUENCY

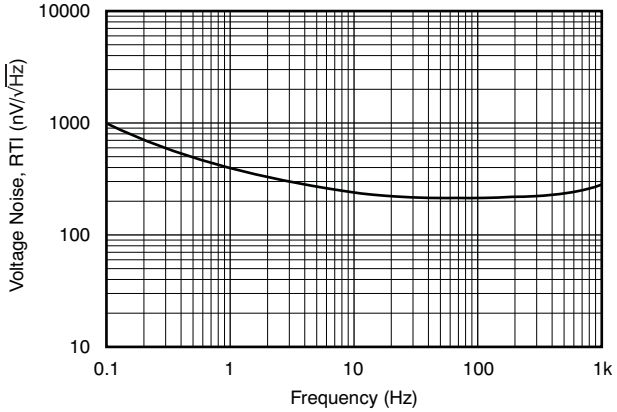

Figure 6.

TYPICAL CHARACTERISTICS (continued)

At T_A = +25°C, V_S = 5V, and R_L = 100kΩ connected to V_S/2, unless otherwise noted.

OPEN-LOOP GAIN AND PHASE vs FREQUENCY

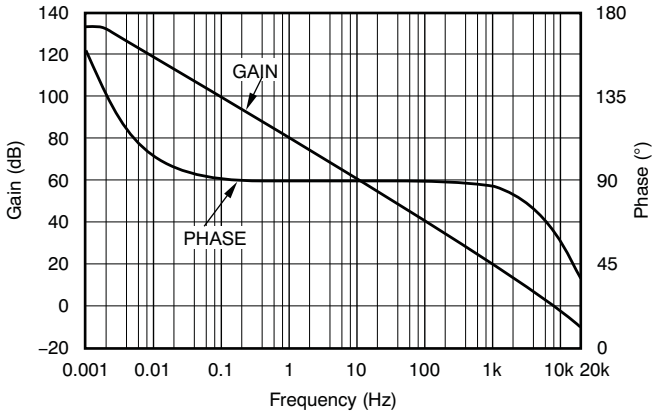

Figure 7.

OPEN-LOOP GAIN vs TEMPERATURE

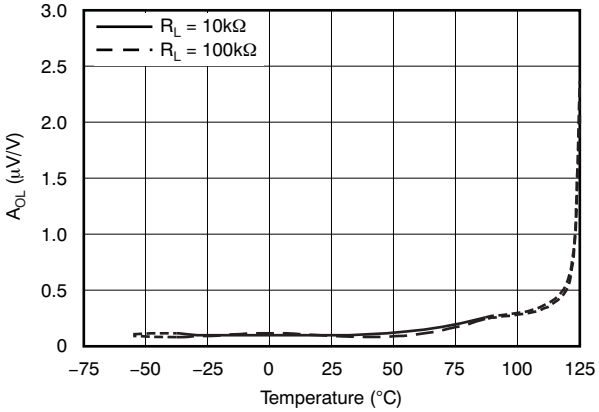

Figure 8.

COMMON-MODE REJECTION RATIO vs FREQUENCY

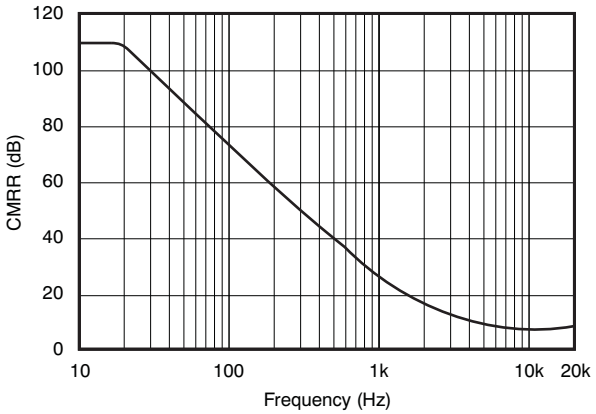

Figure 9.

COMMON-MODE REJECTION RATIO vs TEMPERATURE

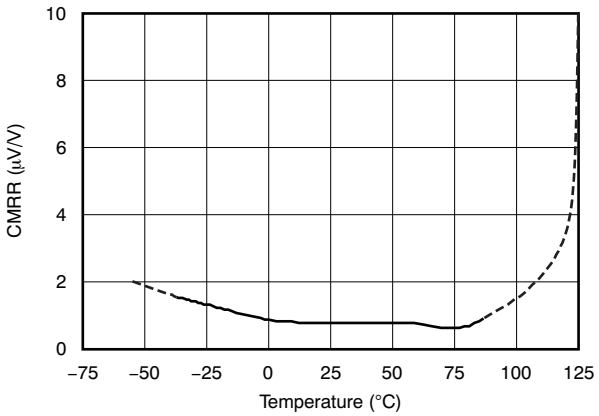

Figure 10.

POWER-SUPPLY REJECTION RATIO vs FREQUENCY

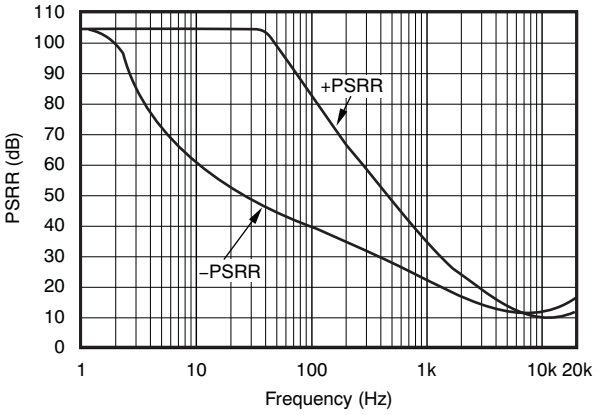

Figure 11.

POWER-SUPPLY REJECTION RATIO vs TEMPERATURE

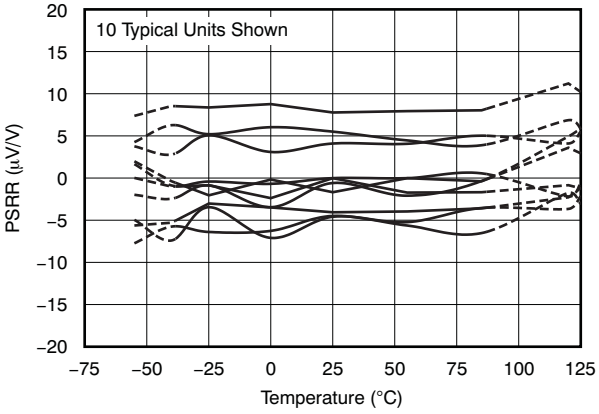

Figure 12.

Copyright © 2007–2008, Texas Instruments Incorporated

TYPICAL CHARACTERISTICS (continued)

At T_A = +25°C, V_S = 5V, and R_L = 100kΩ connected to V_S/2, unless otherwise noted.

OUTPUT VOLTAGE vs OUTPUT CURRENT

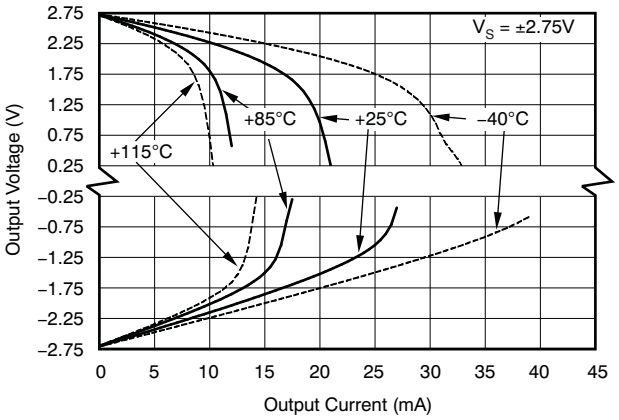

Figure 13.

OUTPUT VOLTAGE SWING-FROM-RAIL vs TEMPERATURE

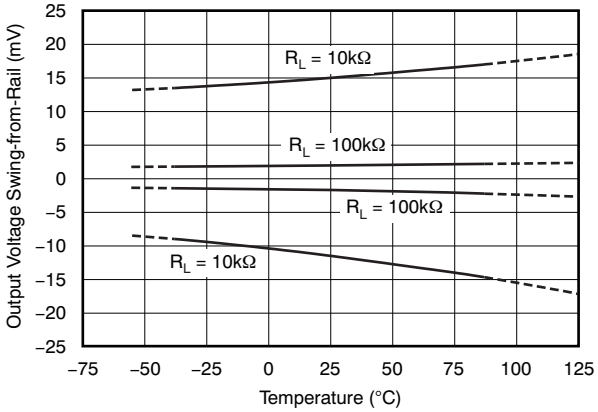

Figure 14.

MAXIMUM OUTPUT VOLTAGE vs FREQUENCY

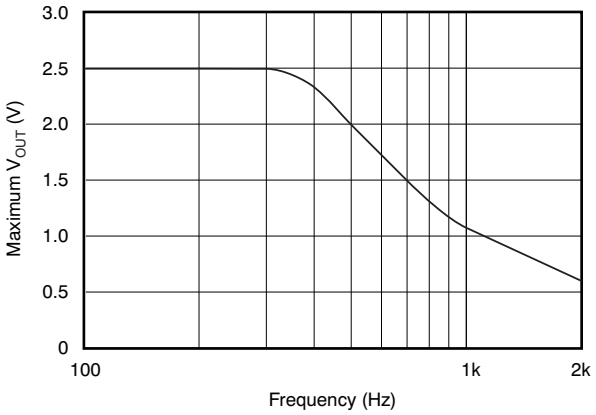

Figure 15.

INPUT BIAS CURRENT vs TEMPERATURE

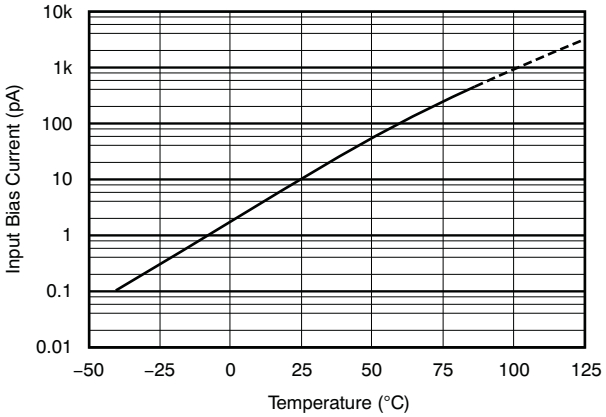

Figure 16.

QUIESCENT CURRENT vs TEMPERATURE

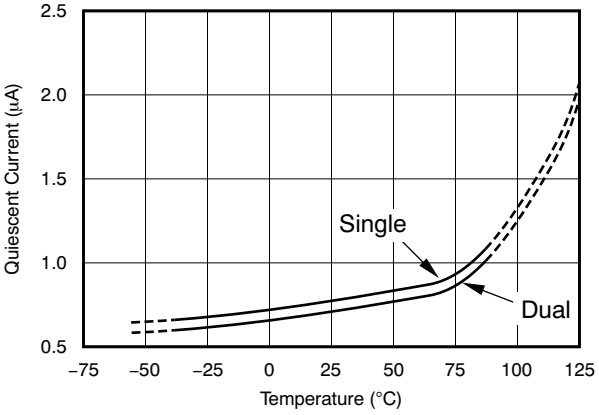

Figure 17.

OPEN-LOOP OUTPUT IMPEDANCE vs FREQUENCY

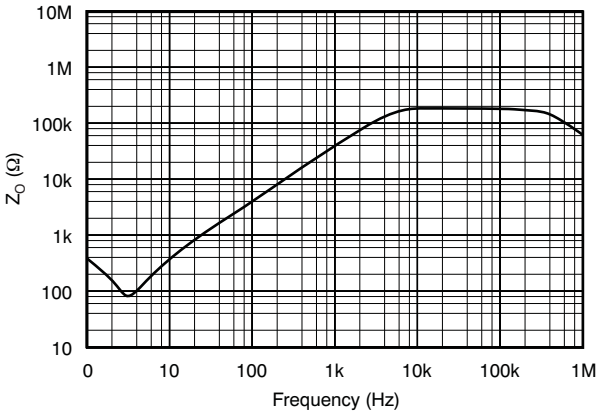

Figure 18.

Copyright © 2007–2008, Texas Instruments Incorporated

TYPICAL CHARACTERISTICS (continued)

At T_A = +25°C, V_S = 5V, and R_L = 100kΩ connected to V_S/2, unless otherwise noted.

CHANNEL SEPARATION vs FREQUENCY

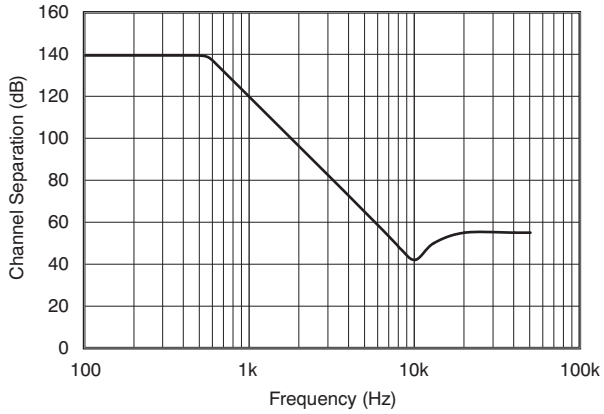

Figure 19.

SMALL-SIGNAL OVERSHOOT vs CAPACITIVE LOAD

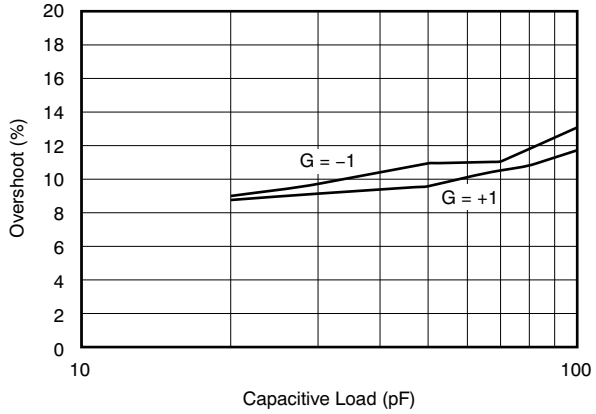

Figure 20.

SMALL-SIGNAL STEP RESPONSE

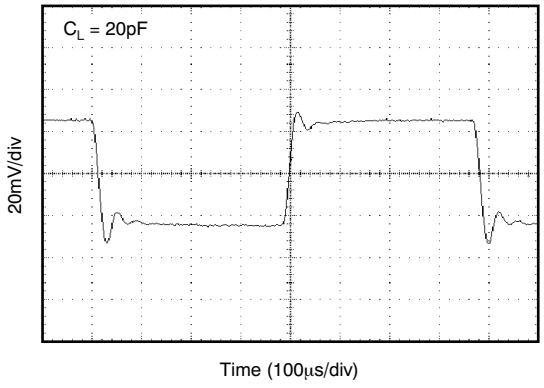

Figure 21.

LARGE-SIGNAL STEP RESPONSE

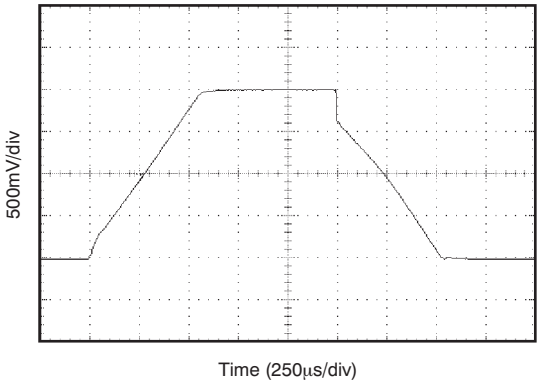

Figure 22.

OVERLOAD RECOVERY

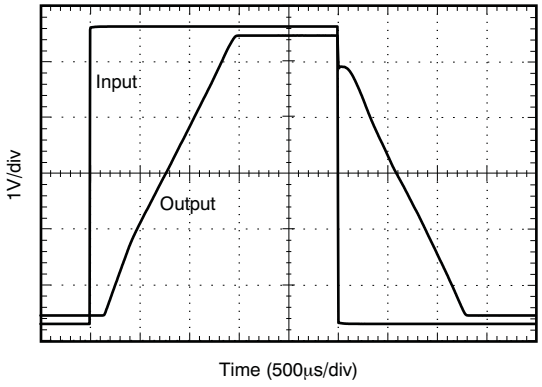

Figure 23.

Copyright © 2007–2008, Texas Instruments Incorporated

APPLICATION INFORMATION

The OPA369 family of operational amplifiers minimizes power consumption and operates on supply voltages as low as 1.8V. Power-supply rejection ratio (PSRR), common-mode rejection ratio (CMRR), and open-loop gain (A_{OL}) typical values are in the range of 100dB or better.

When designing for ultralow power, choose system components carefully. To minimize current consumption, select large-value resistors. Any resistors will react with stray capacitance in the circuit and the input capacitance of the operational amplifier. These parasitic RC combinations can affect the stability of the overall system. A feedback capacitor may be required to assure stability and limit overshoot or gain peaking.

Good layout practice mandates the use of a 0.1µF bypass capacitor placed closely across the supply pins.

OPERATING VOLTAGE

OPA369 series op amps are fully specified and tested from +1.8V to +5.5V (±0.9V to ±2.75V). Parameters that vary significantly with supply voltage are shown in the Typical Characteristic curves.

INPUT COMMON-MODE VOLTAGE RANGE

The OPA369 family is designed to eliminate the input offset transition region typically present in most rail-to-rail complementary stage operational amplifiers, which allows the OPA369 family of amplifiers to provide superior common-mode performance over the entire input range.

The input common-mode voltage range of the OPA369 family typically extends to each supply rail. CMRR is specified from the negative rail to the positive rail. See Figure 4, *Normalized Offset Voltage vs Common-Mode Voltage*.

PROTECTING INPUTS FROM OVER-VOLTAGE

Input currents are typically 10pA. However, large inputs (greater than 500mV beyond the supply rails) can cause excessive current to flow in or out of the input pins. Therefore, in addition to keeping the input voltage between the supply rails, it is also important to limit the input current to less than 10mA. This limiting is easily accomplished with an input resistor, as shown in Figure 24.

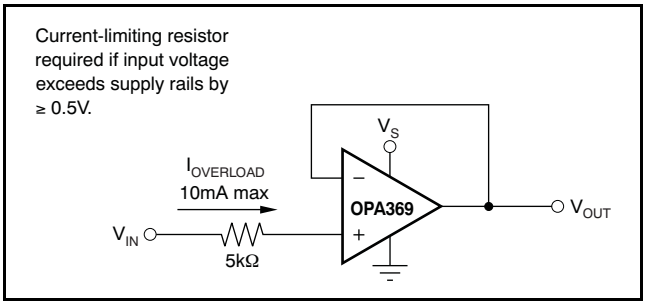

Figure 24. Input Current Protection for Voltages Exceeding the Supply Voltage

BATTERY MONITORING

The low operating voltage and quiescent current of the OPA369 series make it an excellent choice for battery monitoring applications, as shown in Figure 25. In this circuit, V_{STATUS} is high as long as the battery voltage remains above 2V. A low-power reference is used to set the trip point. Resistor values are selected as follows:

1. Selecting R_F: Select R_F such that the current through R_F is approximately 1000x larger than the maximum bias current over temperature:

$$R_F = \frac{V_{REF}}{1000(I_{BMAX})} = \frac{1.2V}{1000(50pA)} = 24M\Omega \approx 20M\Omega \quad (1)$$

2. Choose the hysteresis voltage, V_{HYST}. For battery-monitoring applications, 50mV is adequate.
3. Calculate R_1 as follows:

$$R_1 = R_F\left[\frac{V_{HYST}}{V_{BATT}}\right] = 20M\Omega\left[\frac{50mV}{2.4V}\right] = 420k\Omega \quad (2)$$

4. Select a threshold voltage for V_{IN} rising (V_{THRS}) = 2.0V
5. Calculate R_2 as follows:

$$R_2 = \frac{1}{\left[\left(\frac{V_{THRS}}{V_{REF} \times R_1}\right) - \frac{1}{R_1} - \frac{1}{R_F}\right]} = \frac{1}{\left[\left(\frac{2V}{1.2V \times 420k\Omega}\right) - \frac{1}{420k\Omega} - \frac{1}{20M\Omega}\right]} = 650k\Omega \quad (3)$$

6. Calculate R_{BIAS}: The minimum supply voltage for this circuit is 1.8V. The REF1112 has a current requirement of 1.2µA (max). Providing the REF1112 with 2µA of supply current assures proper operation. Therefore:

$$R_{BIAS} = \frac{(V_{BATTMIN} - V_{REF})}{I_{BIAS}} = \frac{(1.8V - 1.2V)}{2\mu A} = 0.3M\Omega \quad (4)$$

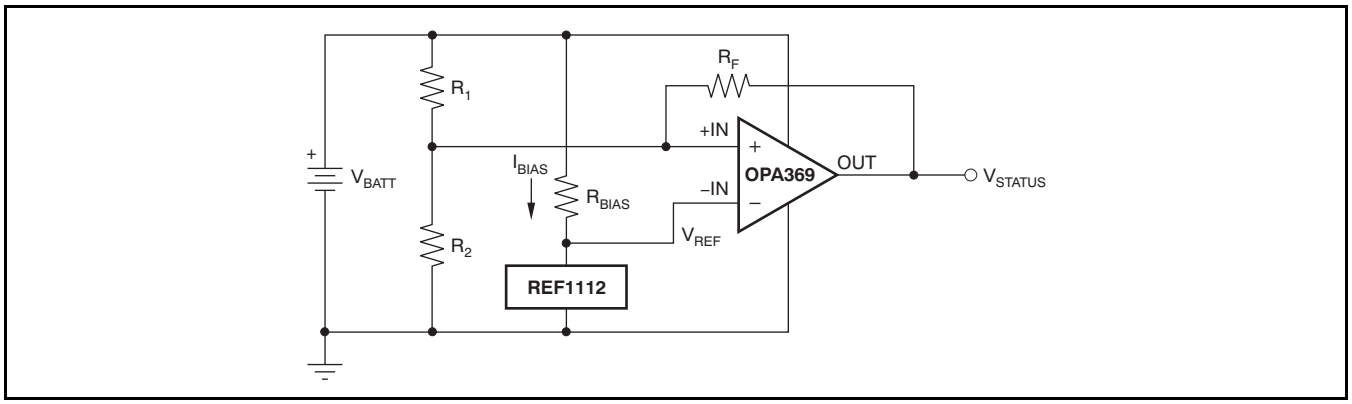

Figure 25. Battery Monitor

Copyright © 2007–2008, Texas Instruments Incorporated

WINDOW COMPARATOR

Figure 26 shows the OPA2369 used as a window comparator. The threshold limits are set by V_H and V_L, with $V_H > V_L$. When $V_{IN} < V_H$, the output of A1 is low. When $V_{IN} > V_L$, the output of A2 is low. Therefore, both op amp outputs are at 0V as long as V_{IN} is between V_H and V_L. This architecture results in no current flowing through either diode, Q1 in cutoff, with the base voltage at 0V, and V_{OUT} forced high.

If V_{IN} falls below V_L, the output of A2 is high, current flows through D2, and V_{OUT} is low. Likewise, if V_{IN} rises above V_H, the output of A1 is high, current flows through D1, and V_{OUT} is low. The window comparator threshold voltages are set as follows:

$$V_H = \frac{R_2}{R_1 + R_2} \times V_S \quad (5)$$

$$V_L = \frac{R_4}{R_3 + R_4} \times V_S \quad (6)$$

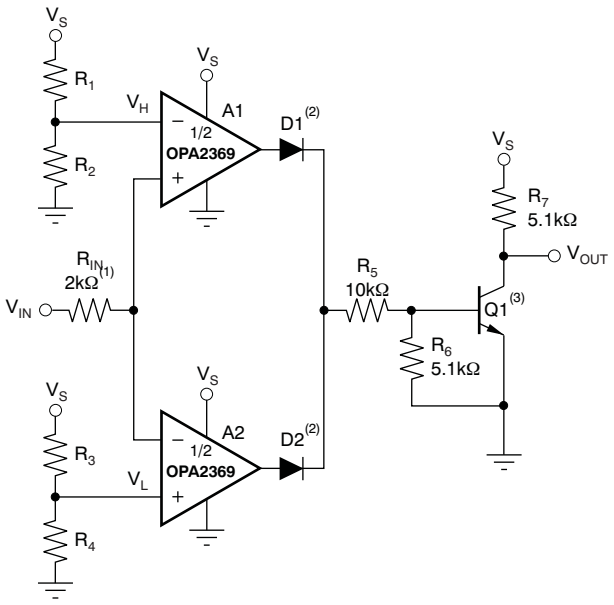

NOTES: (1) R_{IN} protects A1 and A2 from possible excess current flow.
(2) IN4446 or equivalent diodes.
(3) 2N2222 or equivalent NPN transistor.

Figure 26. OPA2369 as a Window Comparator

ADDITIONAL APPLICATION EXAMPLES

Figure 27 through Figure 29 illustrate additional application examples.

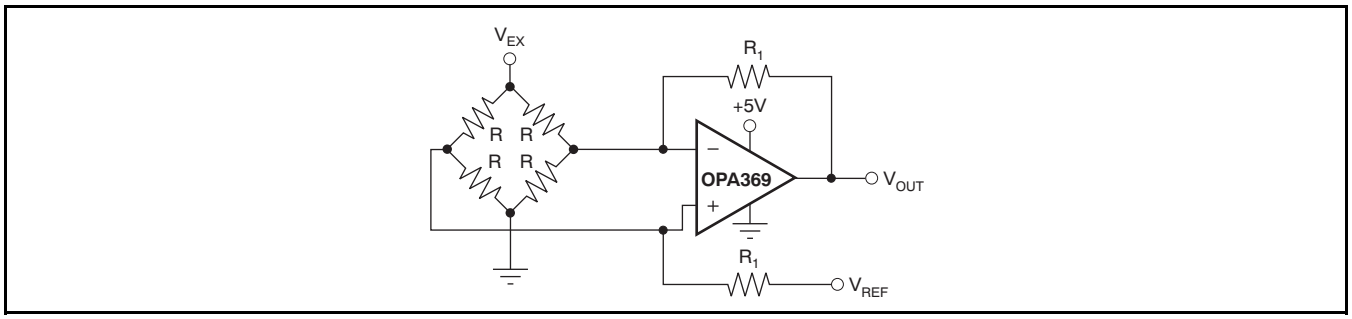

Figure 27. Single Op Amp Bridge Amplifier

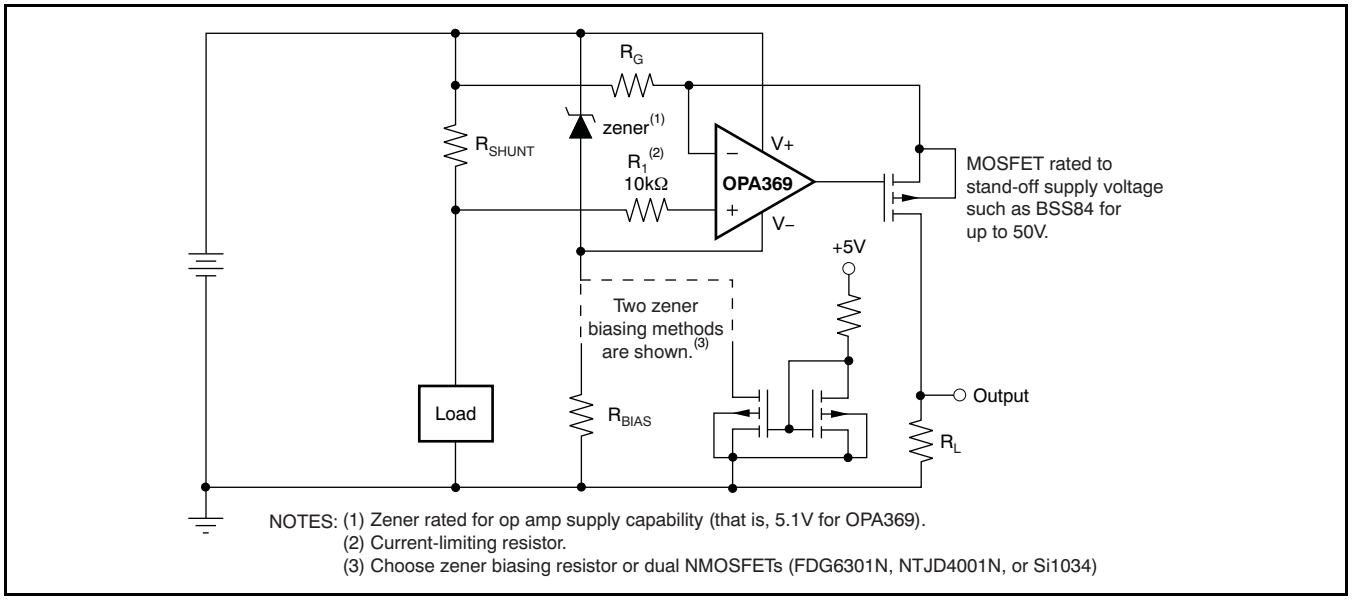

Figure 28. High-Side Current Monitor

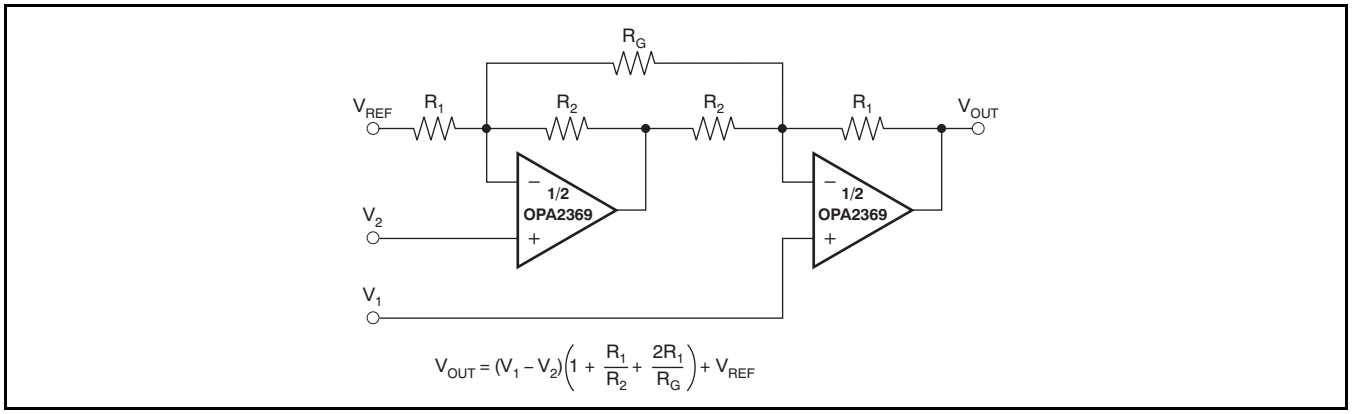

Figure 29. Two Op Amp Instrumentation Amplifier

Copyright © 2007–2008, Texas Instruments Incorporated

PACKAGING INFORMATION

Orderable part number	Status (1)	Material type (2)	Package | Pins	Package qty | Carrier	RoHS (3)	Lead finish/ Ball material (4)	MSL rating/ Peak reflow (5)	Op temp (°C)	Part marking (6)
OPA2369AIDCNR	Active	Production	SOT-23 (DCN) | 8	3000 | LARGE T&R	Yes	NIPDAU	Level-2-260C-1 YEAR	-40 to 85	OCBQ
OPA2369AIDCNR.A	Active	Production	SOT-23 (DCN) | 8	3000 | LARGE T&R	Yes	NIPDAU	Level-2-260C-1 YEAR	-40 to 85	OCBQ
OPA2369AIDCNRG4	Active	Production	SOT-23 (DCN) | 8	3000 | LARGE T&R	Yes	NIPDAU	Level-2-260C-1 YEAR	-40 to 85	OCBQ
OPA2369AIDCNT	Active	Production	SOT-23 (DCN) | 8	250 | SMALL T&R	Yes	NIPDAU	Level-2-260C-1 YEAR	-40 to 85	OCBQ
OPA2369AIDCNT.A	Active	Production	SOT-23 (DCN) | 8	250 | SMALL T&R	Yes	NIPDAU	Level-2-260C-1 YEAR	-40 to 85	OCBQ
OPA2369AIDGKR	Active	Production	VSSOP (DGK) | 8	2500 | LARGE T&R	Yes	Call TI | Nipdauag | Nipdau	Level-2-260C-1 YEAR	-40 to 85	OCCQ
OPA2369AIDGKR.A	Active	Production	VSSOP (DGK) | 8	2500 | LARGE T&R	Yes	Call TI	Level-2-260C-1 YEAR	-40 to 85	OCCQ
OPA2369AIDGKT	Active	Production	VSSOP (DGK) | 8	250 | SMALL T&R	Yes	Call TI | Nipdauag | Nipdau	Level-2-260C-1 YEAR	-40 to 85	OCCQ
OPA2369AIDGKT.A	Active	Production	VSSOP (DGK) | 8	250 | SMALL T&R	Yes	Call TI	Level-2-260C-1 YEAR	-40 to 85	OCCQ
OPA2369AIDGKTG4	Active	Production	VSSOP (DGK) | 8	250 | SMALL T&R	Yes	Call TI	Level-2-260C-1 YEAR	-40 to 85	OCCQ
OPA369AIDCKR	Active	Production	SC70 (DCK) | 5	3000 | LARGE T&R	Yes	NIPDAU	Level-2-260C-1 YEAR	-40 to 85	CJS
OPA369AIDCKR.A	Active	Production	SC70 (DCK) | 5	3000 | LARGE T&R	Yes	NIPDAU	Level-2-260C-1 YEAR	-40 to 85	CJS
OPA369AIDCKR.B	Active	Production	SC70 (DCK) | 5	3000 | LARGE T&R	Yes	NIPDAU	Level-2-260C-1 YEAR	-40 to 85	CJS
OPA369AIDCKRG4	Active	Production	SC70 (DCK) | 5	3000 | LARGE T&R	Yes	NIPDAU	Level-2-260C-1 YEAR	-40 to 85	CJS
OPA369AIDCKRG4.A	Active	Production	SC70 (DCK) | 5	3000 | LARGE T&R	Yes	NIPDAU	Level-2-260C-1 YEAR	-40 to 85	CJS
OPA369AIDCKRG4.B	Active	Production	SC70 (DCK) | 5	3000 | LARGE T&R	Yes	NIPDAU	Level-2-260C-1 YEAR	-40 to 85	CJS
OPA369AIDCKT	Active	Production	SC70 (DCK) | 5	250 | SMALL T&R	Yes	NIPDAU	Level-2-260C-1 YEAR	-40 to 85	CJS
OPA369AIDCKT.A	Active	Production	SC70 (DCK) | 5	250 | SMALL T&R	Yes	NIPDAU	Level-2-260C-1 YEAR	-40 to 85	CJS
OPA369AIDCKT.B	Active	Production	SC70 (DCK) | 5	250 | SMALL T&R	Yes	NIPDAU	Level-2-260C-1 YEAR	-40 to 85	CJS

(1) **Status:** For more details on status, see our product life cycle.

(2) **Material type:** When designated, preproduction parts are prototypes/experimental devices, and are not yet approved or released for full production. Testing and final process, including without limitation quality assurance, reliability performance testing, and/or process qualification, may not yet be complete, and this item is subject to further changes or possible discontinuation. If available for ordering, purchases will be subject to an additional waiver at checkout, and are intended for early internal evaluation purposes only. These items are sold without warranties of any kind.

(3) **RoHS values:** Yes, No, RoHS Exempt. See the TI RoHS Statement for additional information and value definition.

(4) Lead finish/Ball material: Parts may have multiple material finish options. Finish options are separated by a vertical ruled line. Lead finish/Ball material values may wrap to two lines if the finish value exceeds the maximum column width.

(5) MSL rating/Peak reflow: The moisture sensitivity level ratings and peak solder (reflow) temperatures. In the event that a part has multiple moisture sensitivity ratings, only the lowest level per JEDEC standards is shown. Refer to the shipping label for the actual reflow temperature that will be used to mount the part to the printed circuit board.

(6) Part marking: There may be an additional marking, which relates to the logo, the lot trace code information, or the environmental category of the part.

Multiple part markings will be inside parentheses. Only one part marking contained in parentheses and separated by a "~" will appear on a part. If a line is indented then it is a continuation of the previous line and the two combined represent the entire part marking for that device.

Important Information and Disclaimer: The information provided on this page represents TI's knowledge and belief as of the date that it is provided. TI bases its knowledge and belief on information provided by third parties, and makes no representation or warranty as to the accuracy of such information. Efforts are underway to better integrate information from third parties. TI has taken and continues to take reasonable steps to provide representative and accurate information but may not have conducted destructive testing or chemical analysis on incoming materials and chemicals. TI and TI suppliers consider certain information to be proprietary, and thus CAS numbers and other limited information may not be available for release.

In no event shall TI's liability arising out of such information exceed the total purchase price of the TI part(s) at issue in this document sold by TI to Customer on an annual basis.

TAPE AND REEL INFORMATION

REEL DIMENSIONS

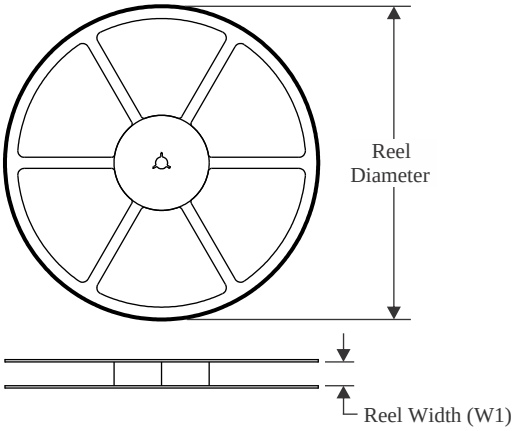

TAPE DIMENSIONS

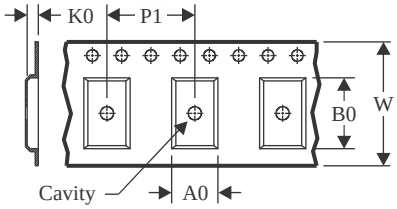

A0	Dimension designed to accommodate the component width
B0	Dimension designed to accommodate the component length
K0	Dimension designed to accommodate the component thickness
W	Overall width of the carrier tape
P1	Pitch between successive cavity centers

QUADRANT ASSIGNMENTS FOR PIN 1 ORIENTATION IN TAPE

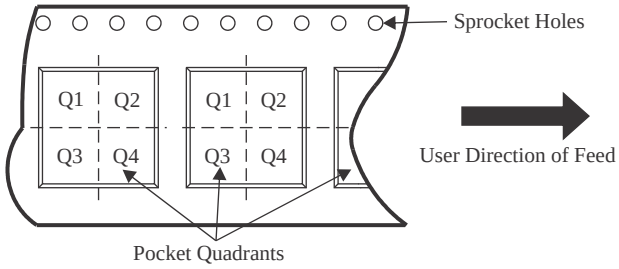

*All dimensions are nominal

Device	Package Type	Package Drawing	Pins	SPQ	Reel Diameter (mm)	Reel Width W1 (mm)	A0 (mm)	B0 (mm)	K0 (mm)	P1 (mm)	W (mm)	Pin1 Quadrant
OPA2369AIDCNR	SOT-23	DCN	8	3000	179.0	8.4	3.2	3.2	1.4	4.0	8.0	Q3
OPA2369AIDCNT	SOT-23	DCN	8	250	179.0	8.4	3.2	3.2	1.4	4.0	8.0	Q3
OPA2369AIDGKR	VSSOP	DGK	8	2500	330.0	12.4	5.3	3.4	1.4	8.0	12.0	Q1
OPA2369AIDGKT	VSSOP	DGK	8	250	180.0	12.4	5.3	3.4	1.4	8.0	12.0	Q1
OPA369AIDCKR	SC70	DCK	5	3000	179.0	8.4	2.2	2.5	1.2	4.0	8.0	Q3
OPA369AIDCKR	SC70	DCK	5	3000	178.0	9.0	2.4	2.5	1.2	4.0	8.0	Q3
OPA369AIDCKRG4	SC70	DCK	5	3000	178.0	9.0	2.4	2.5	1.2	4.0	8.0	Q3
OPA369AIDCKT	SC70	DCK	5	250	179.0	8.4	2.2	2.5	1.2	4.0	8.0	Q3
OPA369AIDCKT	SC70	DCK	5	250	178.0	9.0	2.4	2.5	1.2	4.0	8.0	Q3

TAPE AND REEL BOX DIMENSIONS

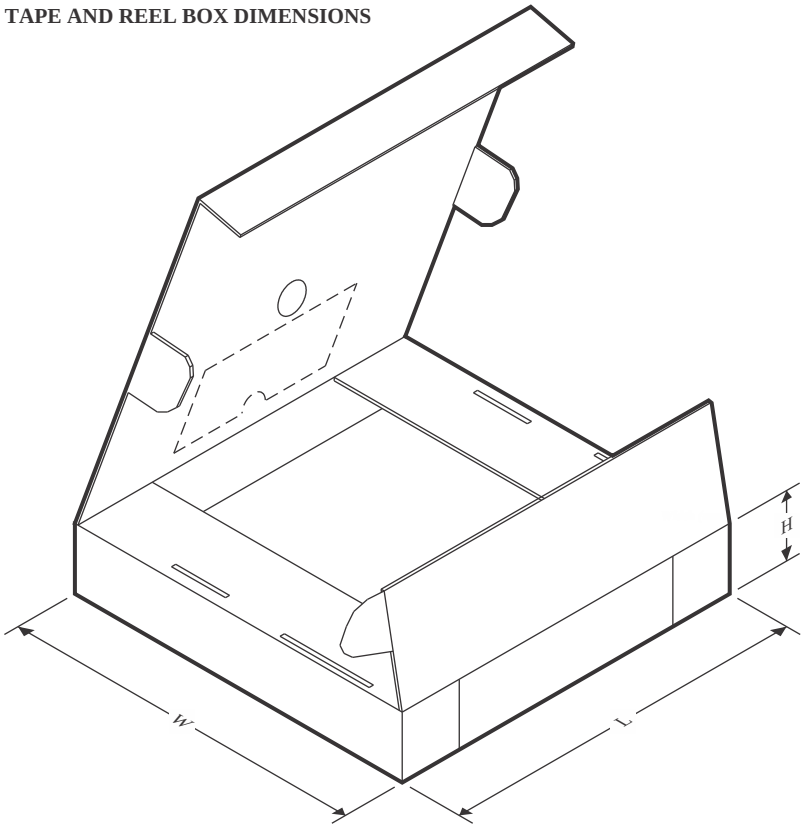

*All dimensions are nominal

Device	Package Type	Package Drawing	Pins	SPQ	Length (mm)	Width (mm)	Height (mm)
OPA2369AIDCNR	SOT-23	DCN	8	3000	213.0	191.0	35.0
OPA2369AIDCNT	SOT-23	DCN	8	250	213.0	191.0	35.0
OPA2369AIDGKR	VSSOP	DGK	8	2500	353.0	353.0	32.0
OPA2369AIDGKT	VSSOP	DGK	8	250	213.0	191.0	35.0
OPA369AIDCKR	SC70	DCK	5	3000	213.0	191.0	35.0
OPA369AIDCKR	SC70	DCK	5	3000	180.0	180.0	18.0
OPA369AIDCKRG4	SC70	DCK	5	3000	180.0	180.0	18.0
OPA369AIDCKT	SC70	DCK	5	250	213.0	191.0	35.0
OPA369AIDCKT	SC70	DCK	5	250	180.0	180.0	18.0

TUBE

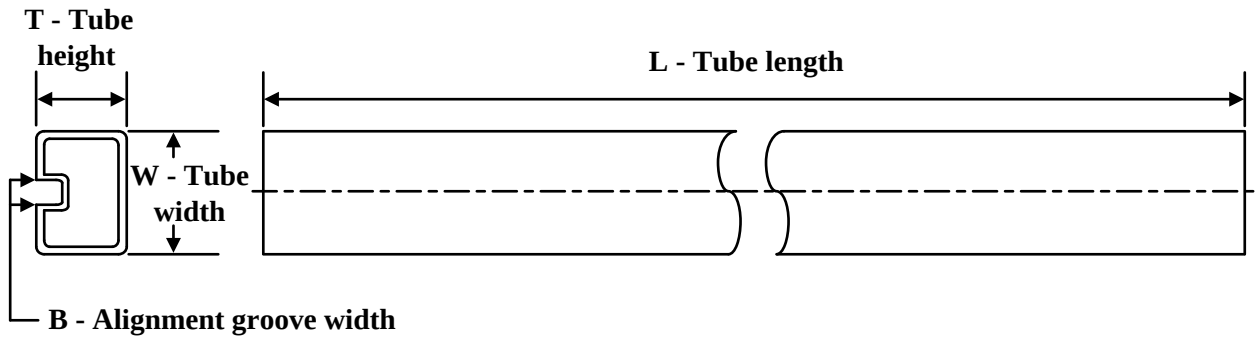

*All dimensions are nominal

Device	Package Name	Package Type	Pins	SPQ	L (mm)	W (mm)	T (µm)	B (mm)
OPA2369AIDGKR	DGK	VSSOP	8	2500	274	6.55	500	2.88
OPA2369AIDGKR.A	DGK	VSSOP	8	2500	274	6.55	500	2.88
OPA2369AIDGKT	DGK	VSSOP	8	250	274	6.55	500	2.88
OPA2369AIDGKT.A	DGK	VSSOP	8	250	274	6.55	500	2.88
OPA2369AIDGKTG4	DGK	VSSOP	8	250	274	6.55	500	2.88

DCN (R–PDSO–G8) PLASTIC SMALL–OUTLINE PACKAGE (DIE DOWN)

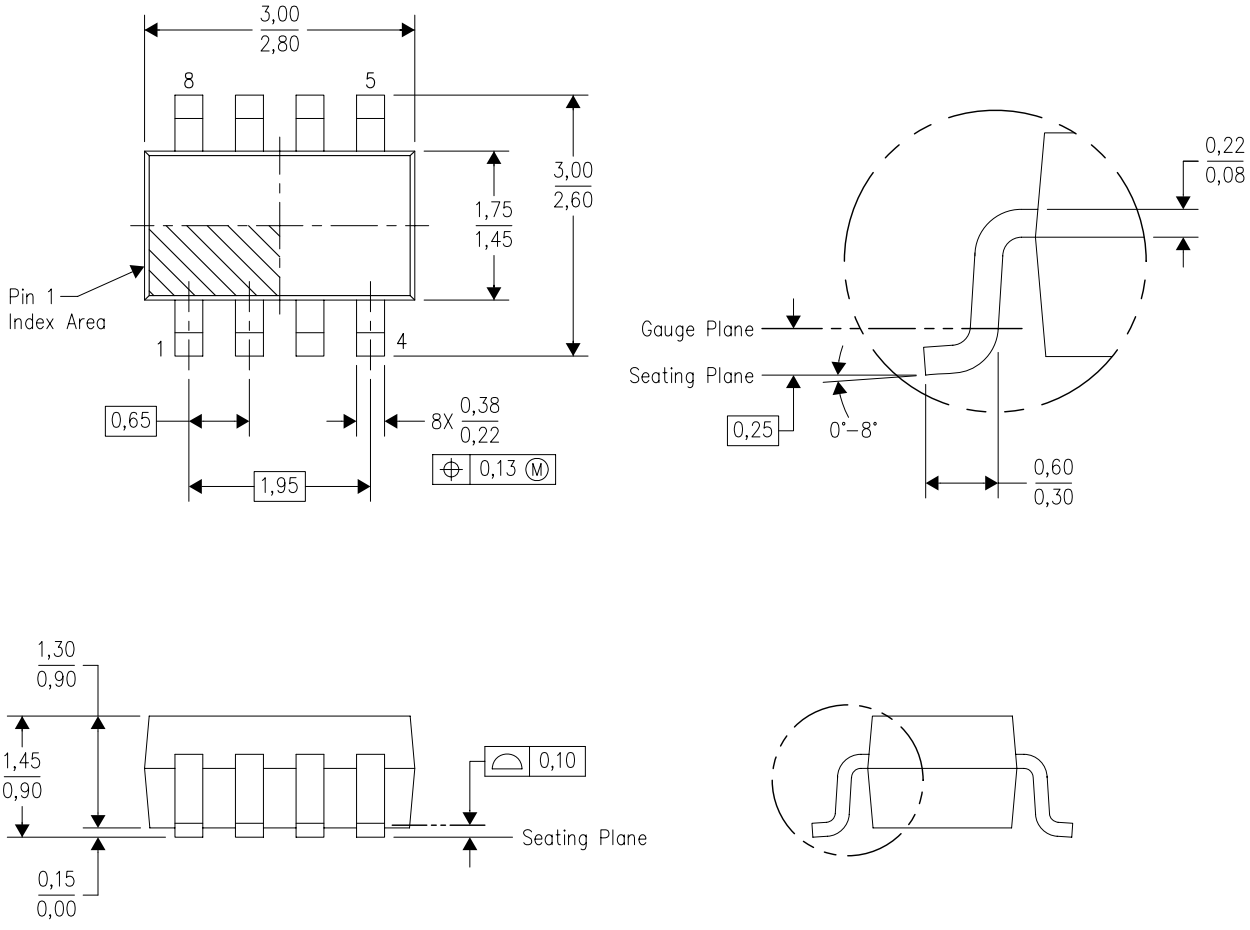

NOTES:
A. All linear dimensions are in millimeters.
B. This drawing is subject to change without notice.
C. Package outline exclusive of metal burr & dambar protrusion/intrusion.
D. Package outline inclusive of solder plating.
E. A visual index feature must be located within the Pin 1 index area.
F. Falls within JEDEC MO–178 Variation BA.
G. Body dimensions do not include flash or protrusion. Mold flash and protrusion shall not exceed 0.25 per side.

DCN (R–PDSO–G8) PLASTIC SMALL–OUTLINE PACKAGE (DIE DOWN)

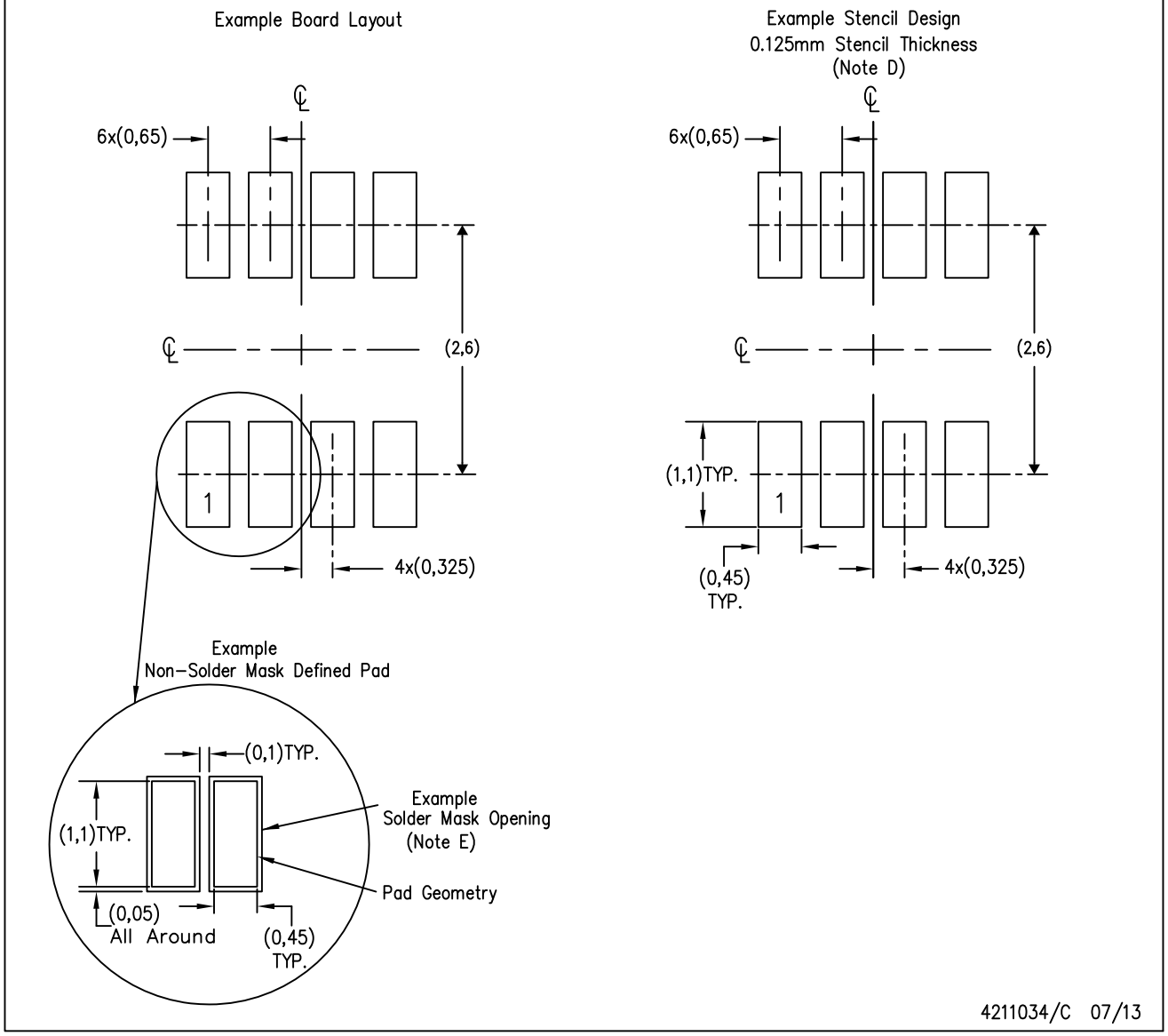

NOTES:
A. All linear dimensions are in millimeters.
B. This drawing is subject to change without notice.
C. Publication IPC–7351 is recommended for alternate designs.
D. Laser cutting apertures with trapezoidal walls and also rounding corners will offer better paste release. Customers should contact their board assembly site for stencil design recommendations. Refer to IPC–7525.
E. Customers should contact their board fabrication site for solder mask tolerances between and around signal pads.

PACKAGE OUTLINE

DCK0005A

SOT - 1.1 max height

SMALL OUTLINE TRANSISTOR

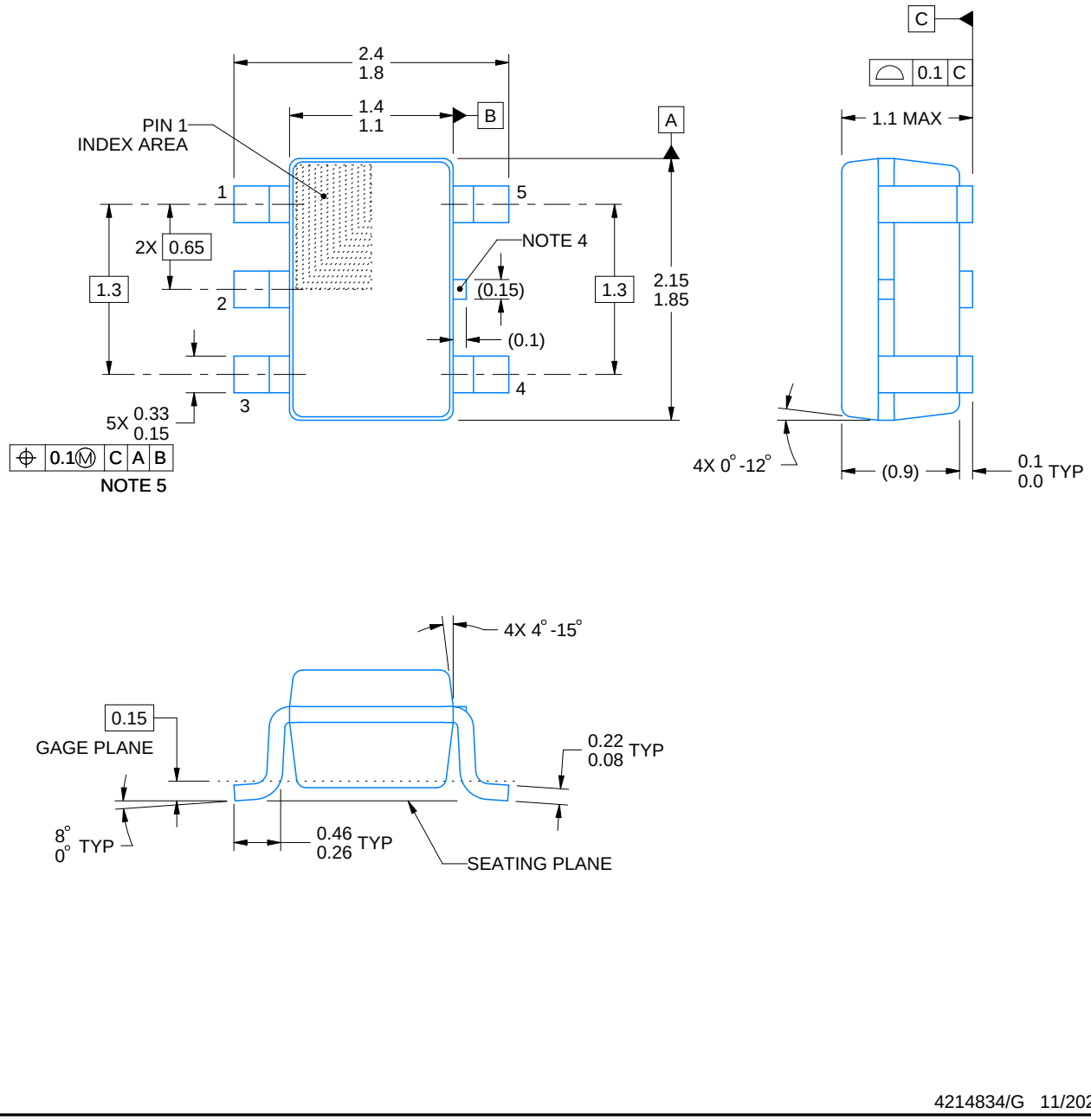

4214834/G 11/2024

NOTES:

1. All linear dimensions are in millimeters. Any dimensions in parenthesis are for reference only. Dimensioning and tolerancing per ASME Y14.5M.
2. This drawing is subject to change without notice.
3. Refernce JEDEC MO-203.
4. Support pin may differ or may not be present.
5. Lead width does not comply with JEDEC.
6. Body dimensions do not include mold flash, protrusions, or gate burrs. Mold flash, protrusions, or gate burrs shall not exceed 0.25mm per side

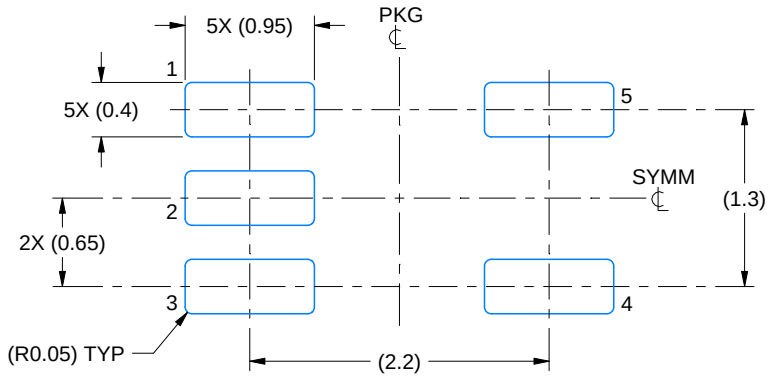

LAND PATTERN EXAMPLE
EXPOSED METAL SHOWN
SCALE:18X

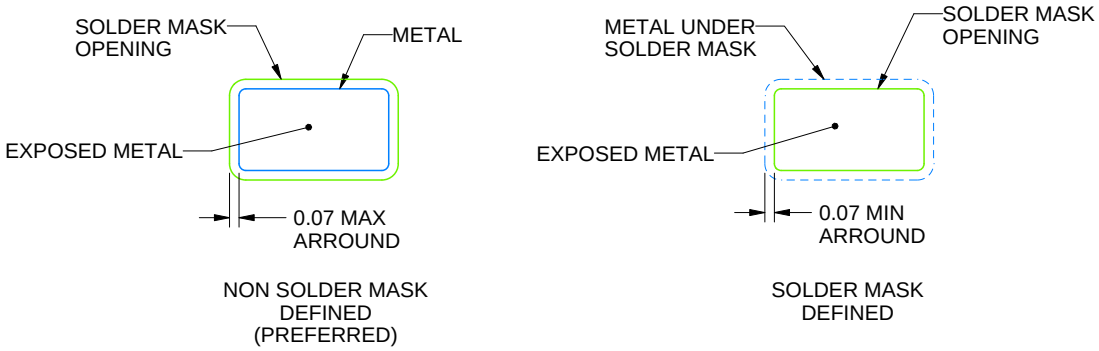

SOLDER MASK DETAILS

4214834/G 11/2024

NOTES: (continued)

7. Publication IPC-7351 may have alternate designs.
8. Solder mask tolerances between and around signal pads can vary based on board fabrication site.

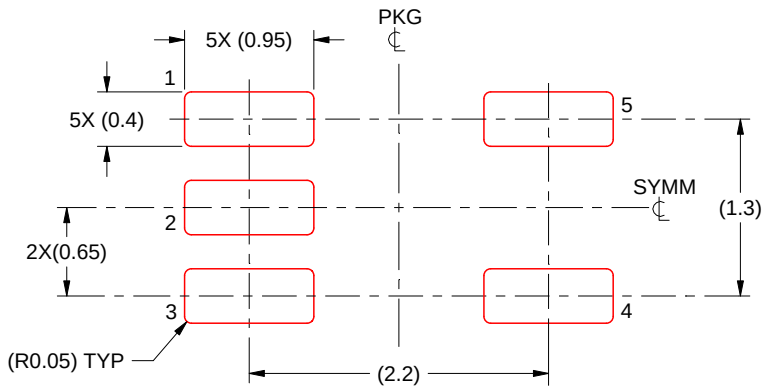

SOLDER PASTE EXAMPLE
BASED ON 0.125 THICK STENCIL
SCALE:18X

4214834/G 11/2024

NOTES: (continued)

9. Laser cutting apertures with trapezoidal walls and rounded corners may offer better paste release. IPC-7525 may have alternate design recommendations.
10. Board assembly site may have different recommendations for stencil design.

PACKAGE OUTLINE

DGK0008A

VSSOP - 1.1 mm max height

SMALL OUTLINE PACKAGE

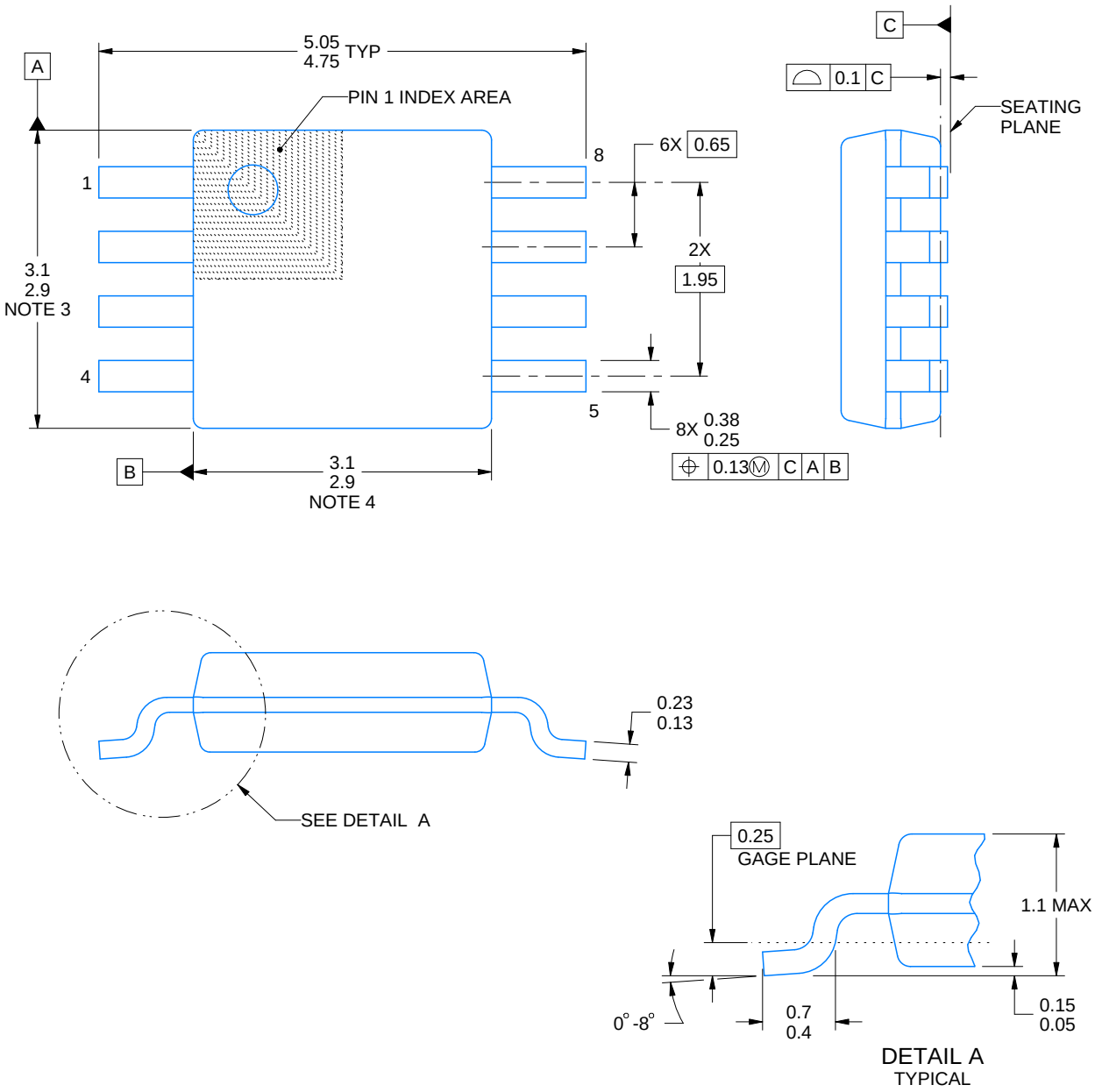

PowerPAD is a trademark of Texas Instruments.

NOTES:

1. All linear dimensions are in millimeters. Any dimensions in parenthesis are for reference only. Dimensioning and tolerancing per ASME Y14.5M.
2. This drawing is subject to change without notice.
3. This dimension does not include mold flash, protrusions, or gate burrs. Mold flash, protrusions, or gate burrs shall not exceed 0.15 mm per side.
4. This dimension does not include interlead flash. Interlead flash shall not exceed 0.25 mm per side.
5. Reference JEDEC registration MO-187.

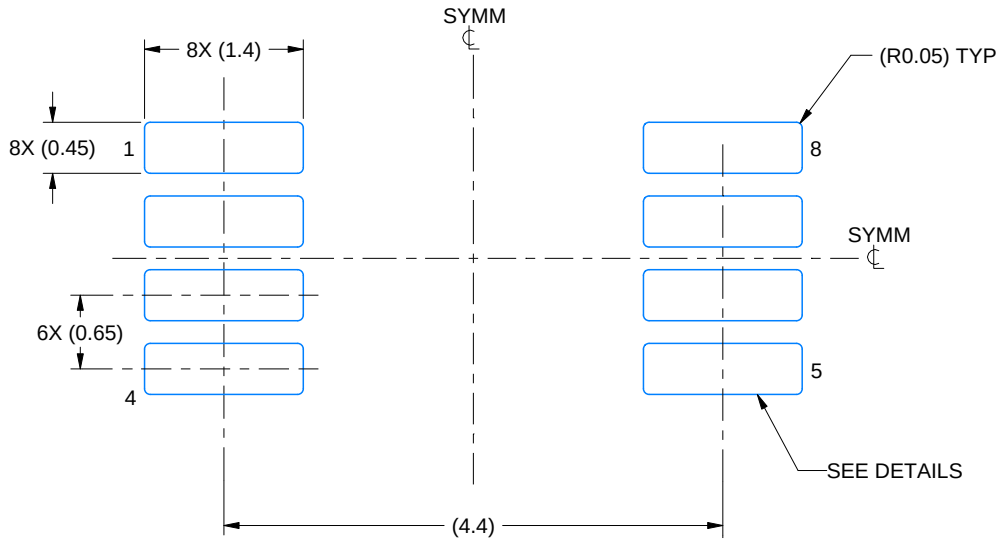

LAND PATTERN EXAMPLE
EXPOSED METAL SHOWN
SCALE: 15X

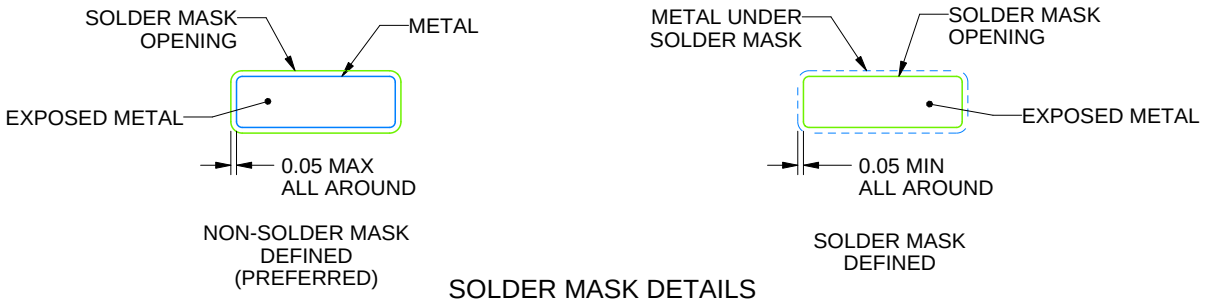

SOLDER MASK DETAILS

4214862/A 04/2023

NOTES: (continued)

6. Publication IPC-7351 may have alternate designs.
7. Solder mask tolerances between and around signal pads can vary based on board fabrication site.
8. Vias are optional depending on application, refer to device data sheet. If any vias are implemented, refer to their locations shown on this view. It is recommended that vias under paste be filled, plugged or tented.
9. Size of metal pad may vary due to creepage requirement.

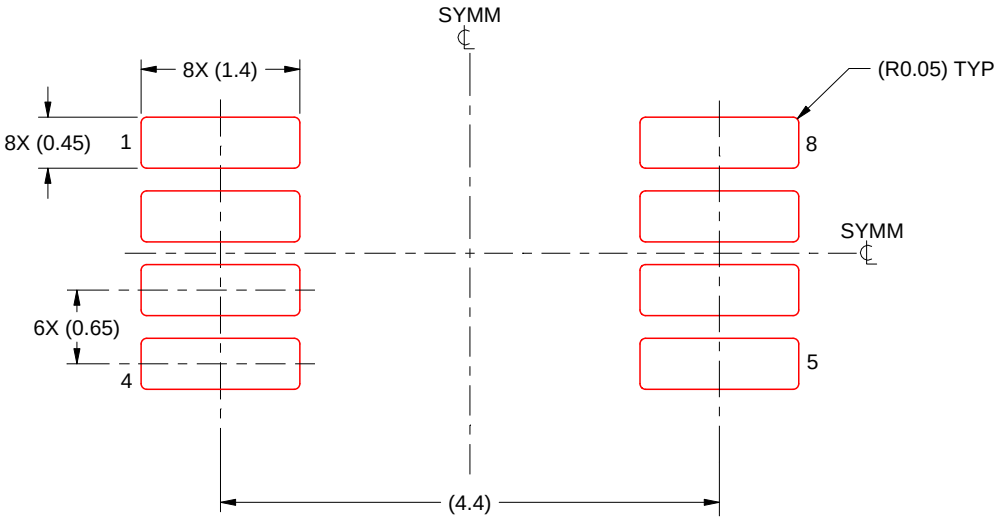

SOLDER PASTE EXAMPLE
SCALE: 15X

4214862/A 04/2023

NOTES: (continued)

11. Laser cutting apertures with trapezoidal walls and rounded corners may offer better paste release. IPC-7525 may have alternate design recommendations.
12. Board assembly site may have different recommendations for stencil design.

IMPORTANT NOTICE AND DISCLAIMER

TI PROVIDES TECHNICAL AND RELIABILITY DATA (INCLUDING DATASHEETS), DESIGN RESOURCES (INCLUDING REFERENCE DESIGNS), APPLICATION OR OTHER DESIGN ADVICE, WEB TOOLS, SAFETY INFORMATION, AND OTHER RESOURCES “AS IS” AND WITH ALL FAULTS, AND DISCLAIMS ALL WARRANTIES, EXPRESS AND IMPLIED, INCLUDING WITHOUT LIMITATION ANY IMPLIED WARRANTIES OF MERCHANTABILITY, FITNESS FOR A PARTICULAR PURPOSE OR NON-INFRINGEMENT OF THIRD PARTY INTELLECTUAL PROPERTY RIGHTS.

These resources are intended for skilled developers designing with TI products. You are solely responsible for (1) selecting the appropriate TI products for your application, (2) designing, validating and testing your application, and (3) ensuring your application meets applicable standards, and any other safety, security, regulatory or other requirements.

These resources are subject to change without notice. TI grants you permission to use these resources only for development of an application that uses the TI products described in the resource. Other reproduction and display of these resources is prohibited. No license is granted to any other TI intellectual property right or to any third party intellectual property right. TI disclaims responsibility for, and you fully indemnify TI and its representatives against any claims, damages, costs, losses, and liabilities arising out of your use of these resources.

TI’s products are provided subject to TI’s Terms of Sale, TI’s General Quality Guidelines, or other applicable terms available either on ti.com or provided in conjunction with such TI products. TI’s provision of these resources does not expand or otherwise alter TI’s applicable warranties or warranty disclaimers for TI products. Unless TI explicitly designates a product as custom or customer-specified, TI products are standard, catalog, general purpose devices.

TI objects to and rejects any additional or different terms you may propose.

Copyright © 2026, Texas Instruments Incorporated

Last updated 10/2025