- **Single-Rail Outputs on 'LS399**
- **Selects One of Two 4-Bit Data Sources and Stores Data Synchronously with System Clock**
- **Applications:**
  - **Dual Source for Operands and Constants in Arithmetic Processor; Can Release Processor Register Files for Acquiring New Data**
  - **Implement Separate Registers Capable of Parallel Exchange of Contents Yet Retain External Load Capability**
  - **Universal Type Register for Implementing Various Shift Patterns: Even Has Compound Left-Right Capabilities**

description

This monolithic quadruple two-input multiplexer with storage provides essentially the equivalent functional capabilities of two separate MSI functions (SN54LS157/SN74LS157 and SN54LS175/SN74LS175) in a single 16-pin package.

When the word-select input is low, word 1 (A1, B1, C1, D1) is applied to the flip-flops. A high input to word select will cause the selection of word 2 (A2, B2, C2, D2). The selected word is clocked to the output terminals on the positive-going edge of the clock pulse.

Typical power dissipation is 37 milliwatts. The SN54LS399 is characterized for operation over the full military range of −55°C to 125°C. The SN74LS399 is characterized for operation from 0°C to 70°C.

FUNCTION TABLE

INPUTS		OUTPUTS			
WORD SELECT	CLOCK	Q_A	Q_B	Q_C	Q_D
L	↑	a1	b1	c1	d1
H	↑	a2	b2	c2	d2
X	L	Q_{A0}	Q_{B0}	Q_{C0}	Q_{D0}

SN54LS399 . . . J OR W PACKAGE
SN74LS399 . . . D OR N PACKAGE
(TOP VIEW)

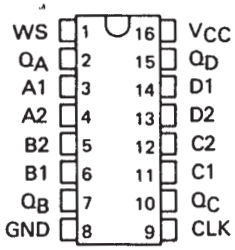

SN54LS399 . . . FK PACKAGE
(TOP VIEW)

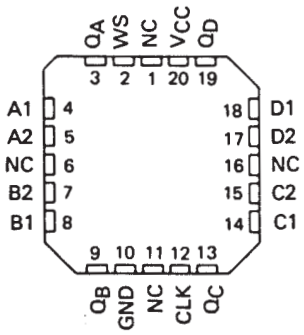

NC – No internal connection

logic symbol†

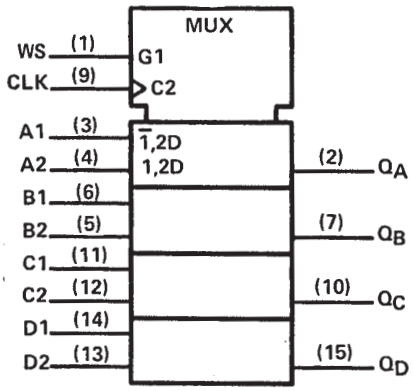

†This symbol is in accordance with ANSI/IEEE Std 91-1984 and IEC Publication 617-12.
Pin numbers shown are for D, J, N, and W packages.

PRODUCTION DATA information is current as of publication date. Products conform to specifications per the terms of Texas Instruments standard warranty. Production processing does not necessarily include testing of all parameters.

Copyright © 1988, Texas Instruments Incorporated

logic diagram (positive logic)

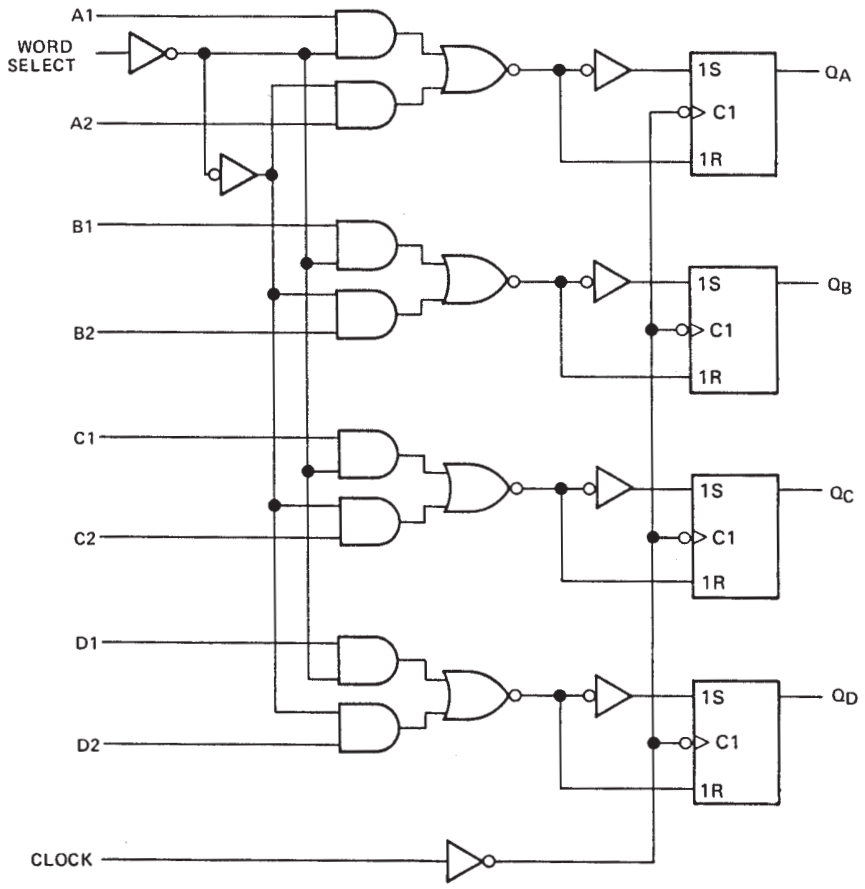

schematics of inputs and outputs

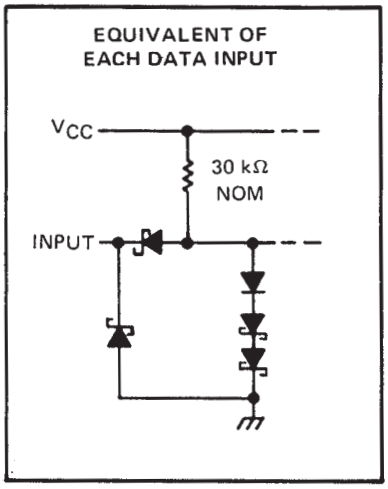

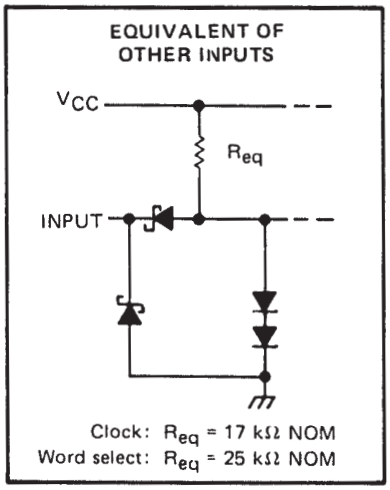

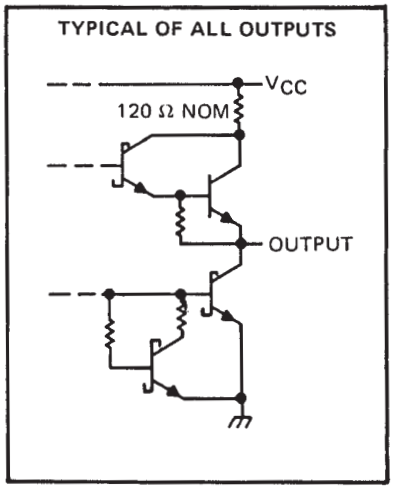

absolute maximum ratings over operating free-air temperature range (unless otherwise noted)

Supply voltage, V_{CC} (see Note 1) . . . . . 7 V
Input voltage . . . . . 7 V
Operating free-air temperature range: SN54LS399 . . . . . −55°C to 125°C
SN74LS399 . . . . . 0°C to 70°C
Storage temperature range . . . . . −65°C to 150°C

NOTE 1: Voltage values are with respect to network ground terminals.

recommended operating conditions

		SN54LS399			SN74LS399			UNIT
		MIN	NOM	MAX	MIN	NOM	MAX	
Supply voltage, V_{CC}		4.5	5	5.5	4.75	5	5.25	V
High-level output current, I_{OH}				−400			−400	μA
Low-level output current, I_{OL}				4			8	mA
Width of clock pulse, high or low level, t_w		20			20			ns
Setup time, t_{su}	Data	25			25			ns
	Word select	45			45			
Hold time, t_h	Data	0			0			ns
	Word select	0			0			
Operating free-air temperature, T_A		−55		125	0		70	°C

electrical characteristics over recommended operating free-air temperature range (unless otherwise noted)

PARAMETER		TEST CONDITIONS†			SN54LS399			SN74LS399			UNIT
					MIN	TYP‡	MAX	MIN	TYP‡	MAX	
V_{IH}	High-level input voltage				2			2			V
V_{IL}	Low-level input voltage						0.7			0.8	V
V_{IK}	Input clamp voltage	V_{CC} = MIN,	I_I = −18 mA				−1.5			−1.5	V
V_{OH}	High-level output voltage	V_{CC} = MIN, V_{IL} = V_{IL}max	V_{IH} = 2 V, I_{OH} = −400 μA		2.5	3.4		2.7	3.4		V
V_{OL}	Low-level output voltage	V_{CC} = MIN, V_{IL} = V_{IL}max	V_{IH} = 2 V,	I_{OL} = 4 mA		0.25	0.4		0.25	0.4	V
				I_{OL} = 8 mA					0.35	0.5	
I_I	Input current at maximum input voltage	V_{CC} = MAX,	V_I = 7 V				0.1			0.1	mA
I_{IH}	High-level input current	V_{CC} = MAX,	V_I = 2.7 V				20			20	μA
I_{IL}	Low-level input current	V_{CC} = MAX,	V_I = 0.4 V				−0.4			−0.4	mA
I_{OS}	Short-circuit output current§	V_{CC} = MAX			−20		−100	−20		−100	mA
I_{CC}	Supply current	V_{CC} = MAX,	See Note 2			7.3	13		7.3	13	mA

† For conditions shown as MIN or MAX, use the appropriate value specified under recommended operating conditions.
‡ All typical values are at V_{CC} = 5 V, T_A = 25°C.
§ Not more than one output should be shorted at a time, duration of the short-circuit should not exceed one second.
NOTE 2: With all outputs open and all inputs except clock low, I_{CC} is measured after applying a momentary 4.5 V, followed by ground, to the clock input.

switching characteristics, V_{CC} = 5 V, T_A = 25°C

PARAMETER		TEST CONDITIONS	MIN	TYP	MAX	UNIT
t_{PLH}	Propagation delay time, low-to-high-level output	C_L = 15 pF, R_L = 2 kΩ, See Note 3		18	27	ns
t_{PHL}	Propagation delay time, high-to-low-level output			21	32	

NOTE 3: Load circuits and voltage waveforms are shown in Section 1.

PACKAGING INFORMATION

Orderable part number	Status (1)	Material type (2)	Package | Pins	Package qty | Carrier	RoHS (3)	Lead finish/ Ball material (4)	MSL rating/ Peak reflow (5)	Op temp (°C)	Part marking (6)
8415401EA	Active	Production	CDIP (J) | 16	25 | TUBE	No	SNPB	N/A for Pkg Type	-55 to 125	8415401EA SNJ54LS399J
SN54LS399J	Active	Production	CDIP (J) | 16	25 | TUBE	No	SNPB	N/A for Pkg Type	-55 to 125	SN54LS399J
SN54LS399J	Active	Production	CDIP (J) | 16	25 | TUBE	No	SNPB	N/A for Pkg Type	-55 to 125	SN54LS399J
SN54LS399J.A	Active	Production	CDIP (J) | 16	25 | TUBE	No	SNPB	N/A for Pkg Type	-55 to 125	SN54LS399J
SN54LS399J.A	Active	Production	CDIP (J) | 16	25 | TUBE	No	SNPB	N/A for Pkg Type	-55 to 125	SN54LS399J
SN74LS399N	Last Time Buy	Production	PDIP (N) | 16	25 | TUBE	Yes	NIPDAU	N/A for Pkg Type	0 to 70	SN74LS399N
SN74LS399N	Last Time Buy	Production	PDIP (N) | 16	25 | TUBE	Yes	NIPDAU	N/A for Pkg Type	0 to 70	SN74LS399N
SN74LS399N.A	Last Time Buy	Production	PDIP (N) | 16	25 | TUBE	Yes	NIPDAU	N/A for Pkg Type	0 to 70	SN74LS399N
SN74LS399N.A	Last Time Buy	Production	PDIP (N) | 16	25 | TUBE	Yes	NIPDAU	N/A for Pkg Type	0 to 70	SN74LS399N
SNJ54LS399J	Active	Production	CDIP (J) | 16	25 | TUBE	No	SNPB	N/A for Pkg Type	-55 to 125	8415401EA SNJ54LS399J
SNJ54LS399J	Active	Production	CDIP (J) | 16	25 | TUBE	No	SNPB	N/A for Pkg Type	-55 to 125	8415401EA SNJ54LS399J
SNJ54LS399J.A	Active	Production	CDIP (J) | 16	25 | TUBE	No	SNPB	N/A for Pkg Type	-55 to 125	8415401EA SNJ54LS399J
SNJ54LS399J.A	Active	Production	CDIP (J) | 16	25 | TUBE	No	SNPB	N/A for Pkg Type	-55 to 125	8415401EA SNJ54LS399J

(1) **Status:** For more details on status, see our product life cycle.

(2) **Material type:** When designated, preproduction parts are prototypes/experimental devices, and are not yet approved or released for full production. Testing and final process, including without limitation quality assurance, reliability performance testing, and/or process qualification, may not yet be complete, and this item is subject to further changes or possible discontinuation. If available for ordering, purchases will be subject to an additional waiver at checkout, and are intended for early internal evaluation purposes only. These items are sold without warranties of any kind.

(3) **RoHS values:** Yes, No, RoHS Exempt. See the TI RoHS Statement for additional information and value definition.

(4) **Lead finish/Ball material:** Parts may have multiple material finish options. Finish options are separated by a vertical ruled line. Lead finish/Ball material values may wrap to two lines if the finish value exceeds the maximum column width.

(5) MSL rating/Peak reflow: The moisture sensitivity level ratings and peak solder (reflow) temperatures. In the event that a part has multiple moisture sensitivity ratings, only the lowest level per JEDEC standards is shown. Refer to the shipping label for the actual reflow temperature that will be used to mount the part to the printed circuit board.

(6) Part marking: There may be an additional marking, which relates to the logo, the lot trace code information, or the environmental category of the part.

Multiple part markings will be inside parentheses. Only one part marking contained in parentheses and separated by a "~" will appear on a part. If a line is indented then it is a continuation of the previous line and the two combined represent the entire part marking for that device.

Important Information and Disclaimer: The information provided on this page represents TI's knowledge and belief as of the date that it is provided. TI bases its knowledge and belief on information provided by third parties, and makes no representation or warranty as to the accuracy of such information. Efforts are underway to better integrate information from third parties. TI has taken and continues to take reasonable steps to provide representative and accurate information but may not have conducted destructive testing or chemical analysis on incoming materials and chemicals. TI and TI suppliers consider certain information to be proprietary, and thus CAS numbers and other limited information may not be available for release.

In no event shall TI's liability arising out of such information exceed the total purchase price of the TI part(s) at issue in this document sold by TI to Customer on an annual basis.

OTHER QUALIFIED VERSIONS OF SN54LS399, SN74LS399 :

- Catalog : SN74LS399
- Military : SN54LS399

NOTE: Qualified Version Definitions:

- Catalog - TI's standard catalog product
- Military - QML certified for Military and Defense Applications

TUBE

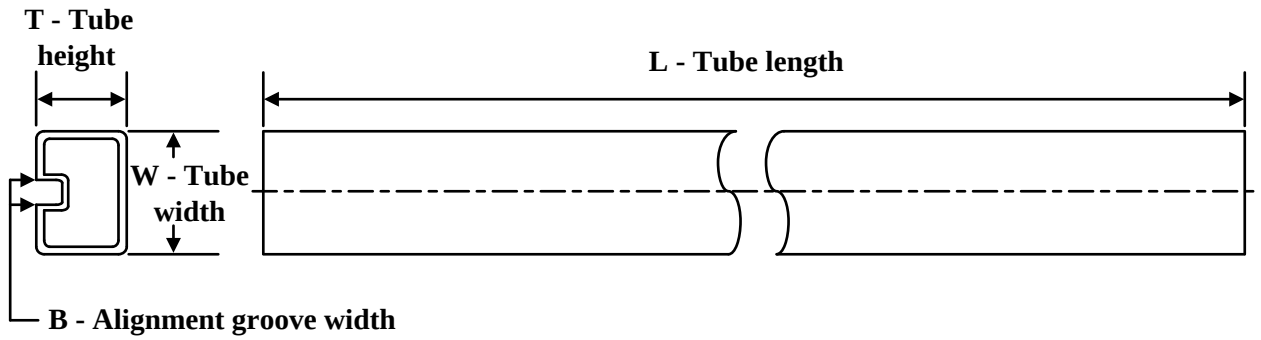

*All dimensions are nominal

Device	Package Name	Package Type	Pins	SPQ	L (mm)	W (mm)	T (µm)	B (mm)
SN74LS399N	N	PDIP	16	25	506	13.97	11230	4.32
SN74LS399N	N	PDIP	16	25	506	13.97	11230	4.32
SN74LS399N.A	N	PDIP	16	25	506	13.97	11230	4.32
SN74LS399N.A	N	PDIP	16	25	506	13.97	11230	4.32

J (R–GDIP–T**)

14 LEADS SHOWN

CERAMIC DUAL IN–LINE PACKAGE

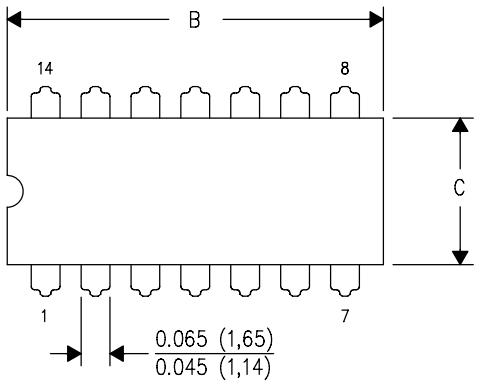

DIM \ PINS **	14	16	18	20
A	0.300 (7,62) BSC	0.300 (7,62) BSC	0.300 (7,62) BSC	0.300 (7,62) BSC
B MAX	0.785 (19,94)	.840 (21,34)	0.960 (24,38)	1.060 (26,92)
B MIN	—	—	—	—
C MAX	0.300 (7,62)	0.300 (7,62)	0.310 (7,87)	0.300 (7,62)
C MIN	0.245 (6,22)	0.245 (6,22)	0.220 (5,59)	0.245 (6,22)

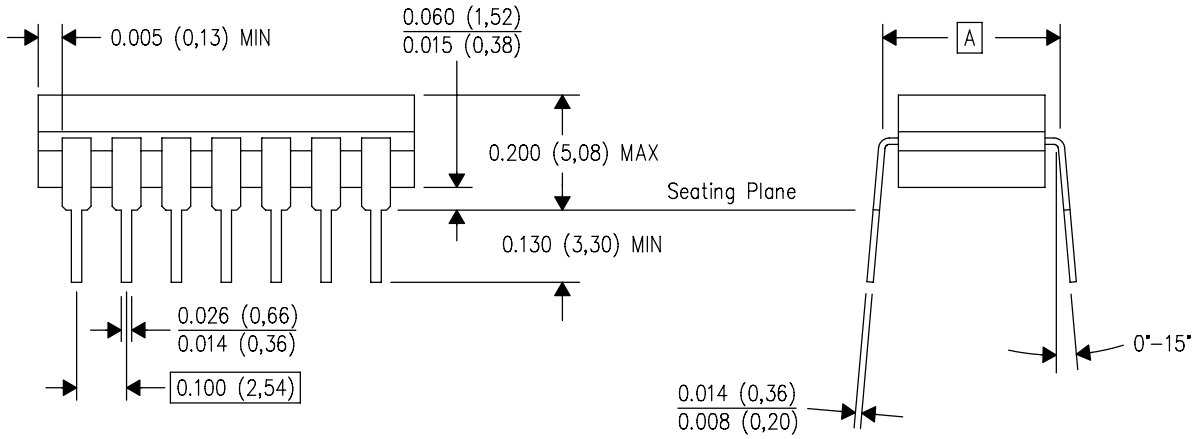

4040083/F 03/03

NOTES:
A. All linear dimensions are in inches (millimeters).
B. This drawing is subject to change without notice.
C. This package is hermetically sealed with a ceramic lid using glass frit.
D. Index point is provided on cap for terminal identification only on press ceramic glass frit seal only.
E. Falls within MIL STD 1835 GDIP1–T14, GDIP1–T16, GDIP1–T18 and GDIP1–T20.

N (R–PDIP–T**)

PLASTIC DUAL–IN–LINE PACKAGE

16 PINS SHOWN

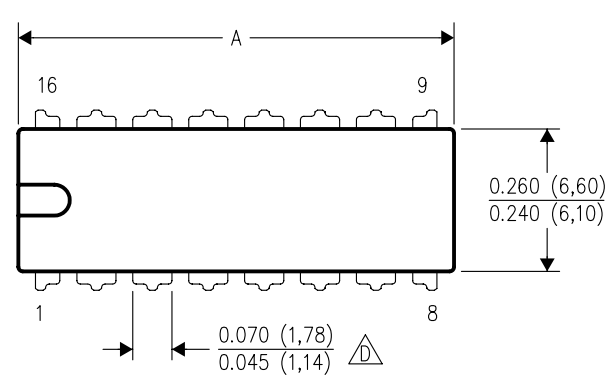

DIM \ PINS **	14	16	18	20
A MAX	0.775 (19,69)	0.775 (19,69)	0.920 (23,37)	1.060 (26,92)
A MIN	0.745 (18,92)	0.745 (18,92)	0.850 (21,59)	0.940 (23,88)
MS–001 VARIATION (C)	AA	BB	AC	AD

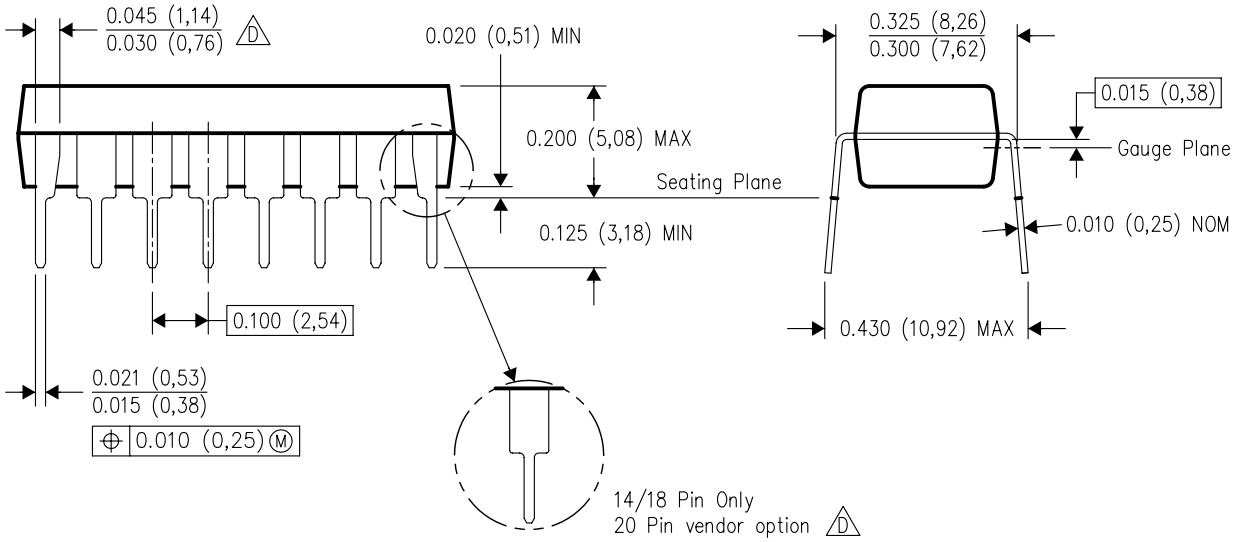

4040049/E 12/2002

NOTES:
A. All linear dimensions are in inches (millimeters).
B. This drawing is subject to change without notice.
C. Falls within JEDEC MS–001, except 18 and 20 pin minimum body length (Dim A).
D. The 20 pin end lead shoulder width is a vendor option, either half or full width.

IMPORTANT NOTICE AND DISCLAIMER

TI PROVIDES TECHNICAL AND RELIABILITY DATA (INCLUDING DATASHEETS), DESIGN RESOURCES (INCLUDING REFERENCE DESIGNS), APPLICATION OR OTHER DESIGN ADVICE, WEB TOOLS, SAFETY INFORMATION, AND OTHER RESOURCES “AS IS” AND WITH ALL FAULTS, AND DISCLAIMS ALL WARRANTIES, EXPRESS AND IMPLIED, INCLUDING WITHOUT LIMITATION ANY IMPLIED WARRANTIES OF MERCHANTABILITY, FITNESS FOR A PARTICULAR PURPOSE OR NON-INFRINGEMENT OF THIRD PARTY INTELLECTUAL PROPERTY RIGHTS.

These resources are intended for skilled developers designing with TI products. You are solely responsible for (1) selecting the appropriate TI products for your application, (2) designing, validating and testing your application, and (3) ensuring your application meets applicable standards, and any other safety, security, regulatory or other requirements.

These resources are subject to change without notice. TI grants you permission to use these resources only for development of an application that uses the TI products described in the resource. Other reproduction and display of these resources is prohibited. No license is granted to any other TI intellectual property right or to any third party intellectual property right. TI disclaims responsibility for, and you fully indemnify TI and its representatives against any claims, damages, costs, losses, and liabilities arising out of your use of these resources.

TI’s products are provided subject to TI’s Terms of Sale, TI’s General Quality Guidelines, or other applicable terms available either on ti.com or provided in conjunction with such TI products. TI’s provision of these resources does not expand or otherwise alter TI’s applicable warranties or warranty disclaimers for TI products. Unless TI explicitly designates a product as custom or customer-specified, TI products are standard, catalog, general purpose devices.

TI objects to and rejects any additional or different terms you may propose.

Copyright © 2026, Texas Instruments Incorporated

Last updated 10/2025