# SN74AHCT1G00 单通道双输入正与非门

## 1 特性

- 工作电压范围为 4.5 V 至 5.5V
- 5V 时 $t_{pd}$ 最大值为 7.1ns
- 低功耗，$I_{CC}$ 最大值为 10μA
- 电压为 5V 时，输出驱动为 ±8mA
- 输入兼容 TTL 电压
- 闩锁性能超过 250mA，符合 JESD 17 规范

## 2 应用

- IP 电话
- 笔记本电脑
- 打印机
- 门禁与安防
- 太阳能逆变器

## 3 说明

SN74AHCT1G00 器件以正逻辑执行布尔函数 $Y = \overline{A \times B}$ 或 $Y = \overline{A} + \overline{B}$。

**封装信息**

| 器件型号 | 封装 [1] | 封装尺寸 [2] |
|---|---|---|
| SN74AHCT1G00 | DBV（SOT-23，5） | 2.8 mm × 2.8 mm |
| | DCK（SC-70，5） | 2.00mm × 1.25mm |

(1) 如需了解所有可用封装，请参阅数据表末尾的可订购产品附录。
(2) 封装尺寸（长 × 宽）为标称值，并包括引脚（如适用）。

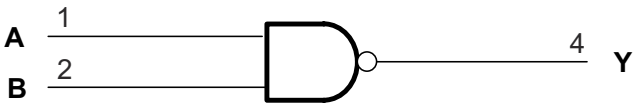


**逻辑图（正逻辑）**

本资源的原文使用英文撰写。 为方便起见，TI 提供了译文；由于翻译过程中可能使用了自动化工具，TI 不保证译文的准确性。 为确认准确性，请务必访问 ti.com 参考最新的英文版本（控制文档）。

# Table of Contents

**1 特性**.... 1
**2 应用**.... 1
**3 说明**.... 1
**4 Pin Configuration and Functions**.... 3
**5 Specifications**.... 4
5.1 Absolute Maximum Ratings.... 4
5.2 ESD Ratings.... 4
5.3 Recommended Operating Conditions.... 4
5.4 Thermal Information.... 5
5.5 Electrical Characteristics.... 5
5.6 Switching Characteristics.... 5
5.7 Operating Characteristics.... 5
5.8 Typical Characteristics.... 6
**6 Parameter Measurement Information**.... 7
**7 Detailed Description**.... 8
7.1 Overview.... 8
7.2 Functional Block Diagram.... 8
7.3 Feature Description.... 8
7.4 Device Functional Modes.... 8
**8 Application and Implementation**.... 9
8.1 Application Information.... 9
8.2 Typical Application.... 9
8.3 Detailed Design Procedure.... 9
8.4 Application Curves.... 10
**9 Device and Documentation Support**.... 11
9.1 Documentation Support (Analog).... 11
9.2 接收文档更新通知.... 11
9.3 支持资源.... 11
9.4 Trademarks.... 11
9.5 静电放电警告.... 11
9.6 术语表.... 11
**10 Revision History**.... 11
**11 Mechanical, Packaging, and Orderable Information**.... 12


Copyright © 2024 Texas Instruments Incorporated

## 4 Pin Configuration and Functions

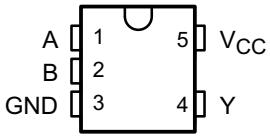


**图 4-1. DBV or DCK Package 5-PIN SOT-23 OR SC-70 (Top View)**

**表 4-1. Pin Functions**

| PIN | | TYPE | DESCRIPTION |
|---|---|---|---|
| NO. | NAME | | |
| 1 | A | I | Input A |
| 2 | B | I | Input B |
| 3 | GND | — | Ground Pin |
| 4 | Y | O | Output Y |
| 5 | $V_{CC}$ | — | Power Pin |

# 5 Specifications

## 5.1 Absolute Maximum Ratings

over operating free-air temperature range (unless otherwise noted)[1]

| | | | MIN | MAX | UNIT |
|---|---|---|---|---|---|
| $V_{CC}$ | Supply voltage | | –0.5 | 7 | V |
| $V_I$ | Input voltage[2] | | –0.5 | 7 | V |
| $V_O$ | Output voltage[2] | | –0.5 | $V_{CC}$ + 0.5 | V |
| $I_{IK}$ | Input clamp current | $V_I$ < 0 | | –20 | mA |
| $I_{OK}$ | Output clamp current | $V_O$ < 0 or $V_O$ > $V_{CC}$ | –20 | 20 | mA |
| $I_O$ | Continuous output current | $V_O$ = 0 to $V_{CC}$ | –25 | 25 | mA |
| | Continuous current through $V_{CC}$ or GND | | –50 | 50 | mA |
| $T_{stg}$ | Storage temperature | | –65 | 150 | °C |

(1) Stresses beyond those listed under *Absolute Maximum Ratings* may cause permanent damage to the device. These are stress ratings only, which do not imply functional operation of the device at these or any other conditions beyond those indicated under *Recommended Operating Conditions*. Exposure to absolute-maximum-rated conditions for extended periods may affect device reliability.
(2) The input and output voltage ratings may be exceeded if the input and output current ratings are observed.

## 5.2 ESD Ratings

| | | | VALUE | UNIT |
|---|---|---|---|---|
| $V_{(ESD)}$ | Electrostatic discharge | Human body model (HBM), per ANSI/ESDA/JEDEC JS-001[1] | ±2000 | V |
| | | Charged-device model (CDM), per JEDEC specification JESD22-C101[2] | ±1000 | |

(1) JEDEC document JEP155 states that 500-V HBM allows safe manufacturing with a standard ESD control process.
(2) JEDEC document JEP157 states that 250-V CDM allows safe manufacturing with a standard ESD control process.

## 5.3 Recommended Operating Conditions

over operating free-air temperature range (unless otherwise noted)[1]

| | | MIN | MAX | UNIT |
|---|---|---|---|---|
| $V_{CC}$ | Supply voltage | 4.5 | 5.5 | V |
| $V_{IH}$ | High-level input voltage | 2 | | V |
| $V_{IL}$ | Low-level Input voltage | | 0.8 | V |
| $V_I$ | Input voltage | 0 | 5.5 | V |
| $V_O$ | Output voltage | 0 | $V_{CC}$ | V |
| $I_{OH}$ | High-level output current | | –8 | mA |
| $I_{OL}$ | Low-level output current | | 8 | mA |
| Δt/Δv | Input transition rise or fall rate | | 20 | ns/V |
| $T_A$ | Operating free-air temperature | –40 | 125 | °C |

(1) All unused inputs of the device must be held at $V_{CC}$ or GND to ensure proper device operation. Refer to the TI application report, *Implications of Slow or Floating CMOS Inputs* (SCBA004).


Copyright © 2024 Texas Instruments Incorporated

## 5.4 Thermal Information

| THERMAL METRIC[1] | | SN74AHCT1G00 | | UNIT |
|---|---|---|---|---|
| | | DBV (SOT-23) | DCK (SC-70) | |
| | | 5 PINS | 5 PINS | |
| $R_{\theta JA}$ | Junction-to-ambient thermal resistance | 278 | 289.2 | °C/W |
| $R_{\theta JC(top)}$ | Junction-to-case (top) thermal resistance | 180.5 | 205.8 | |
| $R_{\theta JB}$ | Junction-to-board thermal resistance | 184.4 | 176.2 | |
| $\psi_{JT}$ | Junction-to-top characterization parameter | 115.4 | 117.6 | |
| $\psi_{JB}$ | Junction-to-board characterization parameter | 183.4 | 175.1 | |
| $R_{\theta JC(bot)}$ | Junction-to-case (bottom) thermal resistance | N/A | N/A | |

(1) For more information about traditional and new thermal metrics, see the *IC Package Thermal Metrics* application report (SPRA953).

## 5.5 Electrical Characteristics

over operating free-air temperature range (unless otherwise noted)

| PARAMETER | TEST CONDITIONS | $V_{CC}$ | $T_A$ = 25°C | | | –40°C to 85°C | | –40°C to 125°C | | UNIT |
|---|---|---|---|---|---|---|---|---|---|---|
| | | | MIN | TYP | MAX | MIN | MAX | MIN | MAX | |
| $V_{OH}$ | $I_{OH}$ = –50 µA | 4.5 V | 4.4 | 4.5 | | 4.4 | | 4.4 | | V |
| | $I_{OH}$ = –8 mA | | 3.94 | | | 3.8 | | 3.8 | | |
| $V_{OL}$ | $I_{OL}$ = 50 µA | 4.5 V | | | 0.1 | | 0.1 | | 0.1 | V |
| | $I_{OL}$ = 8 mA | | | | 0.36 | | 0.44 | | 0.44 | |
| $I_I$ | $V_I$ = 5.5 V or GND | 0 V to 5.5 V | | | ±0.1 | | ±1 | | ±1 | µA |
| $I_{CC}$ | $V_I$ = $V_{CC}$ or GND, $I_O$ = 0 | 5.5 V | | | 1 | | 10 | | 10 | µA |
| $\Delta I_{CC}$ [1] | One input at 3.4 V, Other inputs at $V_{CC}$ or GND | 5.5 V | | | 1.35 | | 1.5 | | 1.5 | mA |
| $C_i$ | $V_I$ = $V_{CC}$ or GND | 5 V | | 2 | 10 | | 10 | | 10 | pF |

(1) This is the increase in supply current for each input at one of the specified TTL voltage levels, rather than 0 V or $V_{CC}$.

## 5.6 Switching Characteristics

over recommended operating free-air temperature range, $V_{CC}$ = 5 V ± 0.5 V (unless otherwise noted) (see Load Circuits and Voltage Waveforms)

| PARAMETER | FROM (INPUT) | TO (OUTPUT) | LOAD CAPACITANCE | $T_A$ = 25°C | | –40°C to 85°C | | –40°C to 125°C | | UNIT |
|---|---|---|---|---|---|---|---|---|---|---|
| | | | | TYP | MAX | MIN | MAX | MIN | MAX | |
| $t_{PLH}$ | A or B | Y | $C_L$ = 15 pF | 5 | 6.2 | 1 | 7.1 | 1 | 8 | ns |
| $t_{PHL}$ | | | | 5 | 6.2 | 1 | 7.1 | 1 | 8 | |
| $t_{PLH}$ | A or B | Y | $C_L$ = 15 pF | 5.5 | 7.9 | 1 | 9 | 1 | 10 | ns |
| $t_{PHL}$ | | | | 5.5 | 7.9 | 1 | 9 | 1 | 10 | |

## 5.7 Operating Characteristics

$V_{CC}$ = 5 V, $T_A$ = 25°C

| PARAMETER | | TEST CONDITIONS | | TYP | UNIT |
|---|---|---|---|---|---|
| $C_{pd}$ | Power dissipation capacitance | No load, | f = 1 MHz | 10.5 | pF |

## 5.8 Typical Characteristics

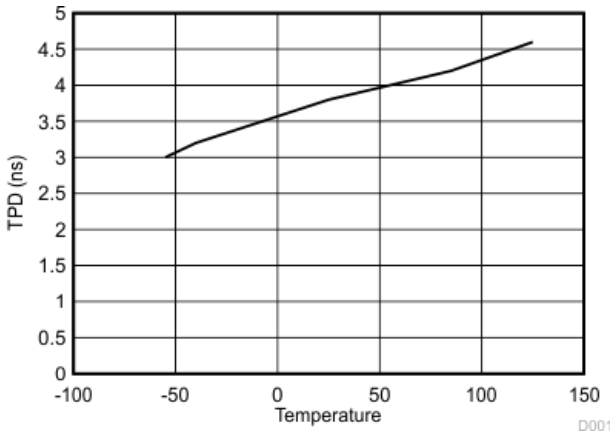


**图 5-1. TPD vs Temperature**


Copyright © 2024 Texas Instruments Incorporated

## 6 Parameter Measurement Information

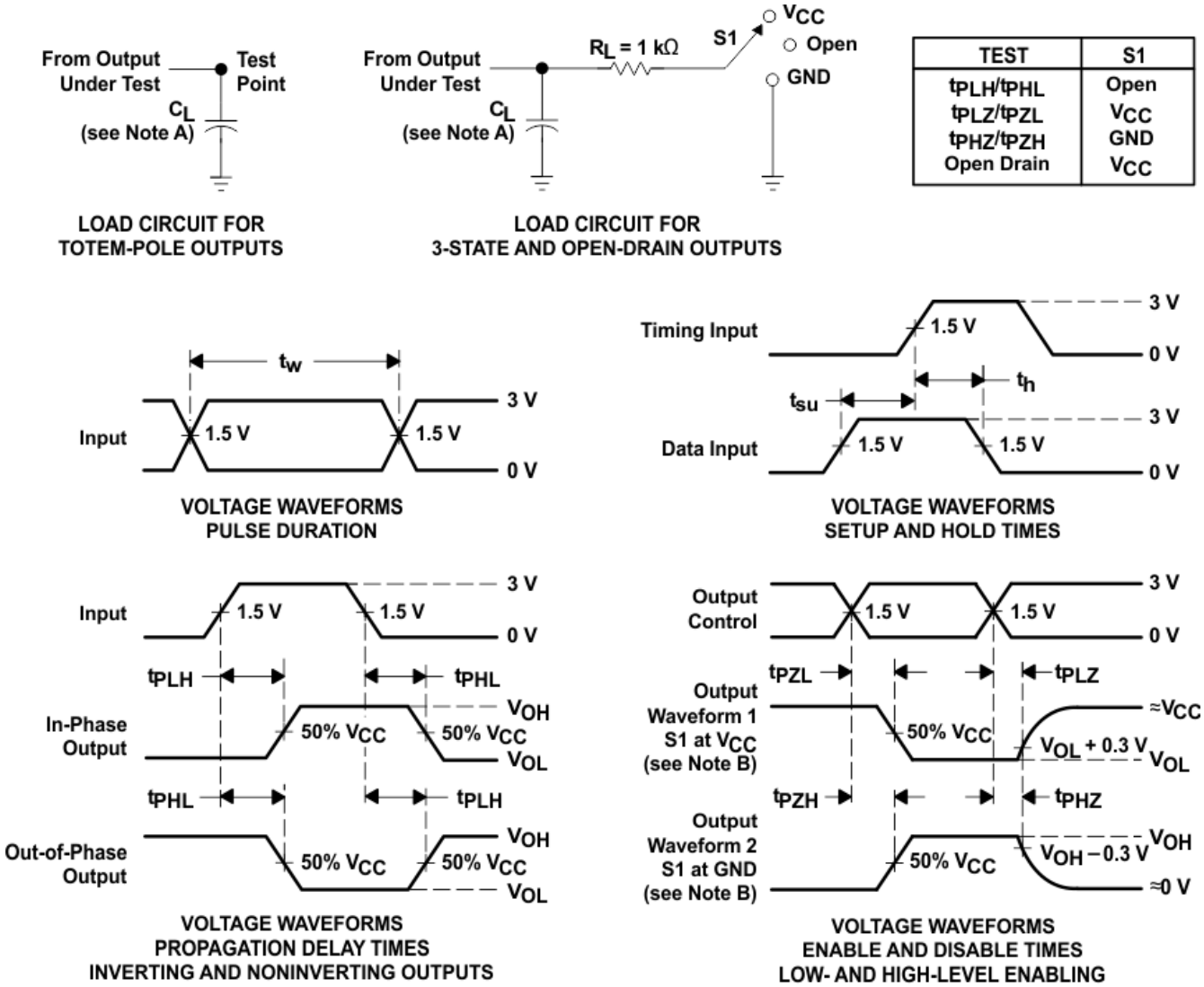


NOTES: A. $C_L$ includes probe and jig capacitance.
B. Waveform 1 is for an output with internal conditions such that the output is low except when disabled by the output control. Waveform 2 is for an output with internal conditions such that the output is high except when disabled by the output control.
C. All input pulses are supplied by generators having the following characteristics: PRR ≤ 1 MHz, $Z_O$ = 50 Ω, $t_r$ ≤ 3 ns, $t_f$ ≤ 3 ns.
D. The outputs are measured one at a time with one input transition per measurement.
E. All parameters and waveforms are not applicable to all devices.

**图 6-1. Load Circuits and Voltage Waveforms**

# 7 Detailed Description

## 7.1 Overview

The SN74AHCT1G00 device performs the Boolean function $Y = \overline{A \times B}$ or $Y = \overline{A} + \overline{B}$ in positive logic.

The device has TTL inputs that allow up translation from 3.3 V to 5 V. The inputs are high impedance when $V_{CC}$ = 0 V.

## 7.2 Functional Block Diagram

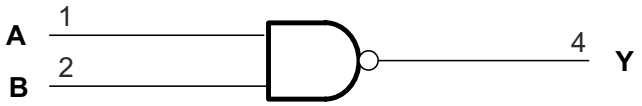


**图 7-1. Logic Diagram (Positive Logic)**

## 7.3 Feature Description

The device is ideal for operating in a 5-V logic system. The low propagation delay allows fast switching and higher speeds of operation. In addition, the low power consumption makes this device a good choice for portable and battery power-sensitive applications.

## 7.4 Device Functional Modes

**表 7-1. Function Table**

| INPUTS | | OUTPUT |
|---|---|---|
| A | B | Y |
| H | H | L |
| L | X | H |
| X | L | H |


Copyright © 2024 Texas Instruments Incorporated

# 8 Application and Implementation

**备注**

以下应用部分中的信息不属于 TI 器件规格的范围，TI 不担保其准确性和完整性。TI 的客 户应负责确定器件是否适用于其应用。客户应验证并测试其设计，以确保系统功能。

## 8.1 Application Information

The SN74AHCT1G00 is a low drive CMOS device that can be used for a multitude of bus interface type applications where output ringing is a concern. The low drive and slow edge rates will minimize overshoot and undershoot on the outputs. The TTL inputs can except voltages down to 3.3 V and translate up to 5 V.

## 8.2 Typical Application

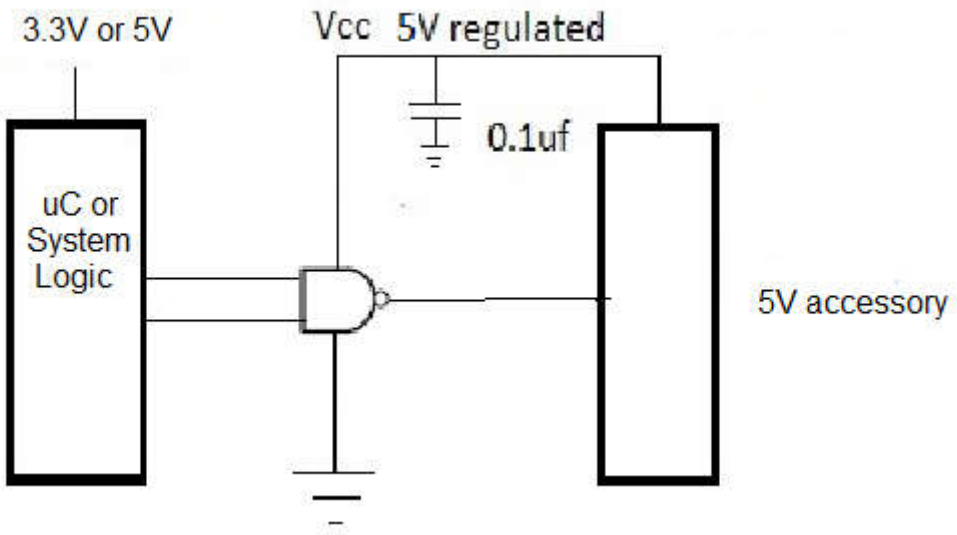


**图 8-1. Typical Application Schematic**

### 8.2.1 Design Requirements

This device uses CMOS technology and has balanced output drive. Take care to avoid bus contention because it can drive currents that would exceed maximum limits. The high drive will also create fast edges into light loads so consider routing and load conditions to prevent ringing.

## 8.3 Detailed Design Procedure

- Recommended input conditions:
  - Specified high and low levels. See ($V_{IH}$ and $V_{IL}$) in *节 5.3*.
  - Inputs are overvoltage tolerant allowing them to go as high as 5.5 V at any valid $V_{CC}$.
- Recommended output conditions:
  - Load currents should not exceed 25 mA per output and 50 mA total for the part.
  - Outputs should not be pulled above $V_{CC}$.

## 8.4 Application Curves

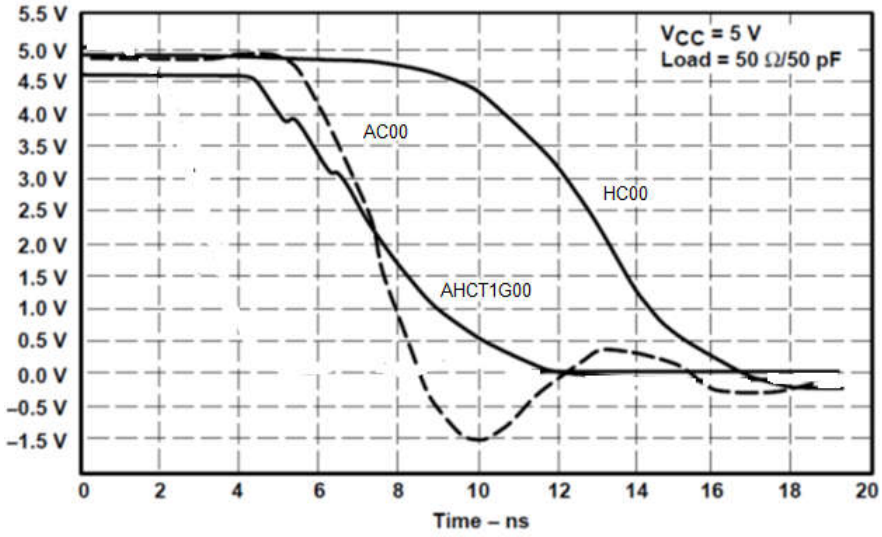


**图 8-2. Switching Characteristics Comparison**


Copyright © 2024 Texas Instruments Incorporated

# 9 Device and Documentation Support

## 9.1 Documentation Support (Analog)

### 9.1.1 Related Documentation

For related documentation, see the following:

- Texas Instruments, *CMOS Power Consumption and Cpd Calculation* application note
- Texas Instruments, *Designing With Logic* application note
- Texas Instruments, *Thermal Characteristics of Standard Linear and Logic (SLL) Packages and Devices* application note
- Texas Instruments, *Implications of Slow or Floating CMOS Inputs* application note

## 9.2 接收文档更新通知

要接收文档更新通知，请导航至 ti.com 上的器件产品文件夹。点击*订阅更新* 进行注册，即可每周接收产品信息更改摘要。有关更改的详细信息，请查看任何已修订文档中包含的修订历史记录。

## 9.3 支持资源

TI E2E™ 支持论坛是工程师的重要参考资料，可直接从专家获得快速、经过验证的解答和设计帮助。搜索现有解答或提出自己的问题可获得所需的快速设计帮助。

链接的内容由各个贡献者“按原样”提供。这些内容并不构成 TI 技术规范，并且不一定反映 TI 的观点；请参阅 TI 的《使用条款》。

## 9.4 Trademarks

TI E2E™ is a trademark of Texas Instruments.
所有商标均为其各自所有者的财产。

## 9.5 静电放电警告

静电放电 (ESD) 会损坏这个集成电路。德州仪器 (TI) 建议通过适当的预防措施处理所有集成电路。如果不遵守正确的处理和安装程序，可能会损坏集成电路。

ESD 的损坏小至导致微小的性能降级，大至整个器件故障。精密的集成电路可能更容易受到损坏，这是因为非常细微的参数更改都可能会导致器件与其发布的规格不相符。

## 9.6 术语表

| | |
|---|---|
| TI 术语表 | 本术语表列出并解释了术语、首字母缩略词和定义。 |

# 10 Revision History

| Changes from Revision O (October 2023) to Revision P (February 2024) | Page |
|---|---|
| • Updated thermal values for DBV package from RθJA = 208.2 to 278, RθJC(top) = 76.1 to 180.5, RθJB = 52.5 to 184.4, ΨJT = 4 to 115.4, ΨJB = 51.8 to 183.4, RθJC(bot) = N/A, all values in °C/W | 5 |

| Changes from Revision N (March 2015) to Revision O (October 2023) | Page |
|---|---|
| • 向*封装信息* 表中添加了封装尺寸 | 1 |
| • Updated thermal values for DCK package from RθJA = 287.6 to 289.2, RθJC(top) = 97.7 to 205.8, RθJB = 65 to 176.2, ΨJT = 2 to 117.6, ΨJB = 64.2 to 175.1, RθJC(bot) = N/A, all values in °C/W | 5 |

## 11 Mechanical, Packaging, and Orderable Information

The following pages include mechanical, packaging, and orderable information. This information is the most current data available for the designated devices. This data is subject to change without notice and revision of this document. For browser-based versions of this data sheet, refer to the left-hand navigation.


Copyright © 2024 Texas Instruments Incorporated

## PACKAGING INFORMATION

| Orderable part number | Status (1) | Material type (2) | Package \| Pins | Package qty \| Carrier | RoHS (3) | Lead finish/ Ball material (4) | MSL rating/ Peak reflow (5) | Op temp (°C) | Part marking (6) |
|---|---|---|---|---|---|---|---|---|---|
| 74AHCT1G00DBVRG4 | Active | Production | SOT-23 (DBV) \| 5 | 3000 \| LARGE T&R | Yes | NIPDAU | Level-1-260C-UNLIM | -40 to 125 | B00G |
| 74AHCT1G00DBVRG4.A | Active | Production | SOT-23 (DBV) \| 5 | 3000 \| LARGE T&R | Yes | NIPDAU | Level-1-260C-UNLIM | -40 to 125 | B00G |
| 74AHCT1G00DBVTG4 | Obsolete | Production | SOT-23 (DBV) \| 5 | - | - | Call TI | Call TI | -40 to 125 | B00G |
| 74AHCT1G00DCKRE4 | Active | Production | SC70 (DCK) \| 5 | 3000 \| LARGE T&R | Yes | NIPDAU | Level-1-260C-UNLIM | -40 to 125 | BA3 |
| 74AHCT1G00DCKRG4 | Active | Production | SC70 (DCK) \| 5 | 3000 \| LARGE T&R | Yes | NIPDAU | Level-1-260C-UNLIM | -40 to 125 | BA3 |
| 74AHCT1G00DCKRG4.A | Active | Production | SC70 (DCK) \| 5 | 3000 \| LARGE T&R | Yes | NIPDAU | Level-1-260C-UNLIM | -40 to 125 | BA3 |
| 74AHCT1G00DCKTG4 | Obsolete | Production | SC70 (DCK) \| 5 | - | - | Call TI | Call TI | -40 to 125 | BA3 |
| SN74AHCT1G00DBVR | Active | Production | SOT-23 (DBV) \| 5 | 3000 \| LARGE T&R | Yes | SN | Level-1-260C-UNLIM | -40 to 125 | (37UH, 3C5F, B003, B00G, B00J, B 00S) |
| SN74AHCT1G00DBVR.A | Active | Production | SOT-23 (DBV) \| 5 | 3000 \| LARGE T&R | Yes | SN | Level-1-260C-UNLIM | -40 to 125 | (37UH, 3C5F, B003, B00G, B00J, B 00S) |
| SN74AHCT1G00DBVT | Obsolete | Production | SOT-23 (DBV) \| 5 | - | - | Call TI | Call TI | -40 to 125 | (B003, B00G, B00J, B00S) |
| SN74AHCT1G00DCK3 | Last Time Buy | Production | SC70 (DCK) \| 5 | 3000 \| LARGE T&R | Yes | SNBI | Level-1-260C-UNLIM | -40 to 85 | BAY |
| SN74AHCT1G00DCK3.A | Last Time Buy | Production | SC70 (DCK) \| 5 | 3000 \| LARGE T&R | Yes | SNBI | Level-1-260C-UNLIM | -40 to 85 | BAY |
| SN74AHCT1G00DCKR | Active | Production | SC70 (DCK) \| 5 | 3000 \| LARGE T&R | Yes | SN | Level-1-260C-UNLIM | -40 to 125 | (1QO, BA3, BAG, BA J, BAS) |
| SN74AHCT1G00DCKR.A | Active | Production | SC70 (DCK) \| 5 | 3000 \| LARGE T&R | Yes | SN | Level-1-260C-UNLIM | -40 to 125 | (1QO, BA3, BAG, BA J, BAS) |
| SN74AHCT1G00DCKT | Obsolete | Production | SC70 (DCK) \| 5 | - | - | Call TI | Call TI | -40 to 125 | (BA3, BAG, BAJ, BA S) |

(1) **Status:** For more details on status, see our product life cycle.

(2) **Material type:** When designated, preproduction parts are prototypes/experimental devices, and are not yet approved or released for full production. Testing and final process, including without limitation quality assurance, reliability performance testing, and/or process qualification, may not yet be complete, and this item is subject to further changes or possible discontinuation. If available for ordering, purchases will be subject to an additional waiver at checkout, and are intended for early internal evaluation purposes only. These items are sold without warranties of any kind.

(3) **RoHS values:** Yes, No, RoHS Exempt. See the TI RoHS Statement for additional information and value definition.

(4) **Lead finish/Ball material:** Parts may have multiple material finish options. Finish options are separated by a vertical ruled line. Lead finish/Ball material values may wrap to two lines if the finish value exceeds the maximum column width.

(5) **MSL rating/Peak reflow:** The moisture sensitivity level ratings and peak solder (reflow) temperatures. In the event that a part has multiple moisture sensitivity ratings, only the lowest level per JEDEC standards is shown. Refer to the shipping label for the actual reflow temperature that will be used to mount the part to the printed circuit board.

(6) **Part marking:** There may be an additional marking, which relates to the logo, the lot trace code information, or the environmental category of the part.

Multiple part markings will be inside parentheses. Only one part marking contained in parentheses and separated by a "~" will appear on a part. If a line is indented then it is a continuation of the previous line and the two combined represent the entire part marking for that device.

**Important Information and Disclaimer:**The information provided on this page represents TI's knowledge and belief as of the date that it is provided. TI bases its knowledge and belief on information provided by third parties, and makes no representation or warranty as to the accuracy of such information. Efforts are underway to better integrate information from third parties. TI has taken and continues to take reasonable steps to provide representative and accurate information but may not have conducted destructive testing or chemical analysis on incoming materials and chemicals. TI and TI suppliers consider certain information to be proprietary, and thus CAS numbers and other limited information may not be available for release.

In no event shall TI's liability arising out of such information exceed the total purchase price of the TI part(s) at issue in this document sold by TI to Customer on an annual basis.

**OTHER QUALIFIED VERSIONS OF SN74AHCT1G00 :**

- Automotive : SN74AHCT1G00-Q1

NOTE: Qualified Version Definitions:

- Automotive - Q100 devices qualified for high-reliability automotive applications targeting zero defects

## TAPE AND REEL INFORMATION

**REEL DIMENSIONS**

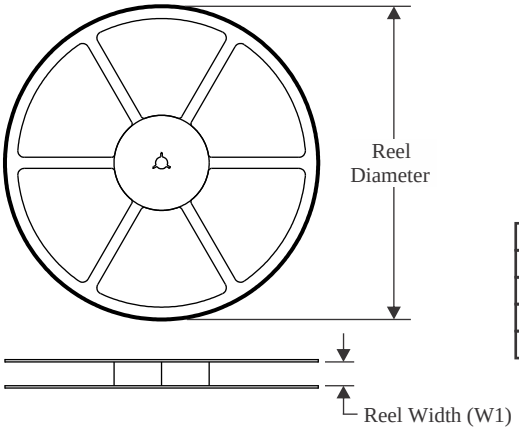


**TAPE DIMENSIONS**

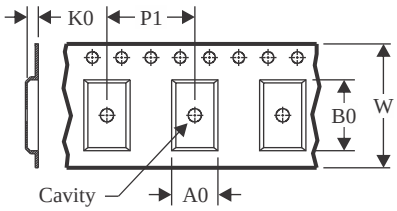


| | |
|---|---|
| A0 | Dimension designed to accommodate the component width |
| B0 | Dimension designed to accommodate the component length |
| K0 | Dimension designed to accommodate the component thickness |
| W | Overall width of the carrier tape |
| P1 | Pitch between successive cavity centers |

**QUADRANT ASSIGNMENTS FOR PIN 1 ORIENTATION IN TAPE**

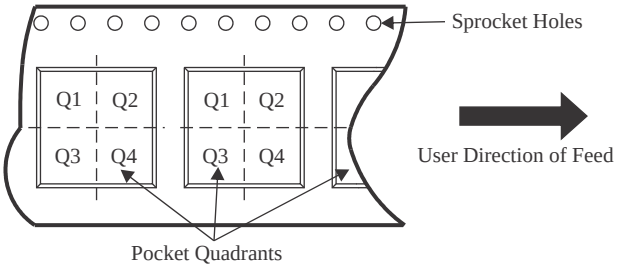


*All dimensions are nominal

| Device | Package Type | Package Drawing | Pins | SPQ | Reel Diameter (mm) | Reel Width W1 (mm) | A0 (mm) | B0 (mm) | K0 (mm) | P1 (mm) | W (mm) | Pin1 Quadrant |
|---|---|---|---|---|---|---|---|---|---|---|---|---|
| 74AHCT1G00DBVRG4 | SOT-23 | DBV | 5 | 3000 | 178.0 | 9.0 | 3.23 | 3.17 | 1.37 | 4.0 | 8.0 | Q3 |
| 74AHCT1G00DCKRG4 | SC70 | DCK | 5 | 3000 | 178.0 | 9.2 | 2.4 | 2.4 | 1.22 | 4.0 | 8.0 | Q3 |
| SN74AHCT1G00DBVR | SOT-23 | DBV | 5 | 3000 | 180.0 | 8.4 | 3.2 | 3.2 | 1.4 | 4.0 | 8.0 | Q3 |
| SN74AHCT1G00DBVR | SOT-23 | DBV | 5 | 3000 | 178.0 | 8.4 | 3.2 | 3.2 | 1.4 | 4.0 | 8.0 | Q3 |
| SN74AHCT1G00DBVR | SOT-23 | DBV | 5 | 3000 | 180.0 | 8.4 | 3.2 | 3.2 | 1.4 | 4.0 | 8.0 | Q3 |
| SN74AHCT1G00DCKR | SC70 | DCK | 5 | 3000 | 180.0 | 8.4 | 2.3 | 2.55 | 1.2 | 4.0 | 8.0 | Q3 |
| SN74AHCT1G00DCKR | SC70 | DCK | 5 | 3000 | 178.0 | 9.0 | 2.4 | 2.5 | 1.2 | 4.0 | 8.0 | Q3 |

TAPE AND REEL BOX DIMENSIONS

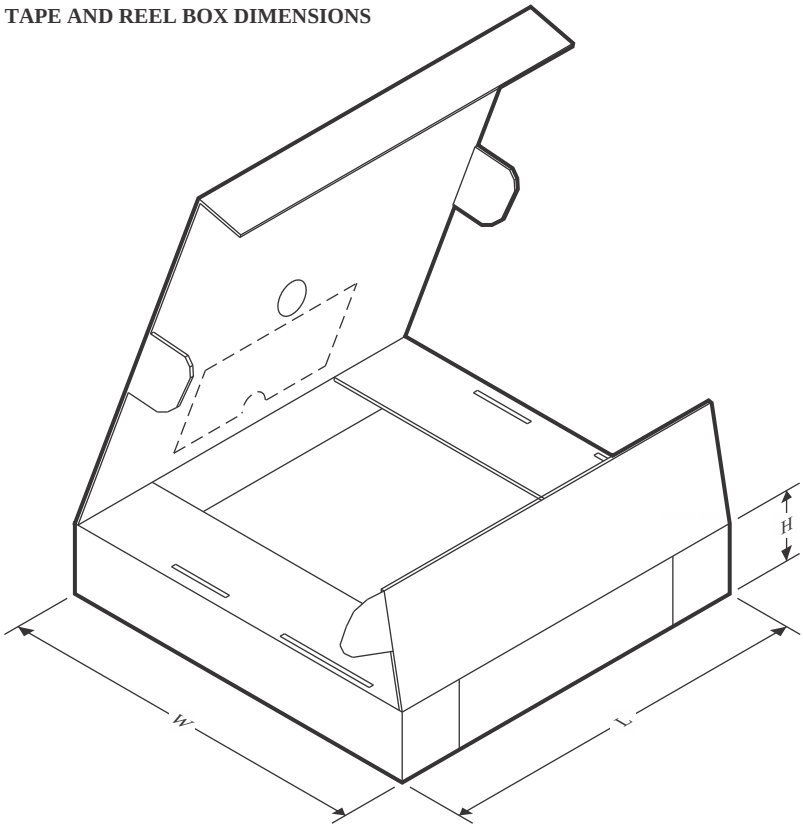


*All dimensions are nominal

| Device | Package Type | Package Drawing | Pins | SPQ | Length (mm) | Width (mm) | Height (mm) |
|---|---|---|---|---|---|---|---|
| 74AHCT1G00DBVRG4 | SOT-23 | DBV | 5 | 3000 | 180.0 | 180.0 | 18.0 |
| 74AHCT1G00DCKRG4 | SC70 | DCK | 5 | 3000 | 180.0 | 180.0 | 18.0 |
| SN74AHCT1G00DBVR | SOT-23 | DBV | 5 | 3000 | 210.0 | 185.0 | 35.0 |
| SN74AHCT1G00DBVR | SOT-23 | DBV | 5 | 3000 | 208.0 | 191.0 | 35.0 |
| SN74AHCT1G00DBVR | SOT-23 | DBV | 5 | 3000 | 210.0 | 185.0 | 35.0 |
| SN74AHCT1G00DCKR | SC70 | DCK | 5 | 3000 | 210.0 | 185.0 | 35.0 |
| SN74AHCT1G00DCKR | SC70 | DCK | 5 | 3000 | 180.0 | 180.0 | 18.0 |

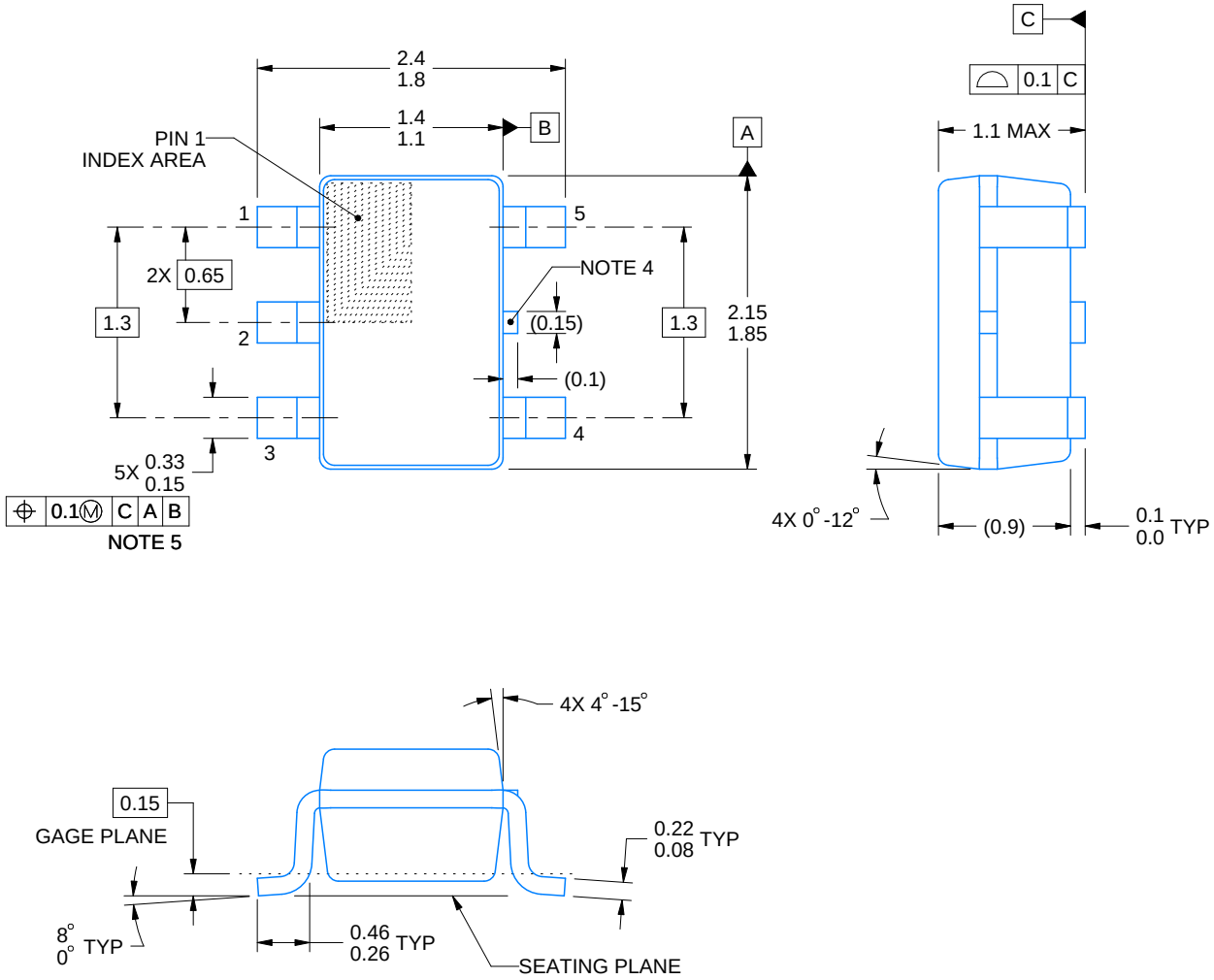


NOTES:

1. All linear dimensions are in millimeters. Any dimensions in parenthesis are for reference only. Dimensioning and tolerancing per ASME Y14.5M.
2. This drawing is subject to change without notice.
3. Refernce JEDEC MO-203.
4. Support pin may differ or may not be present.
5. Lead width does not comply with JEDEC.
6. Body dimensions do not include mold flash, protrusions, or gate burrs. Mold flash, protrusions, or gate burrs shall not exceed 0.25mm per side

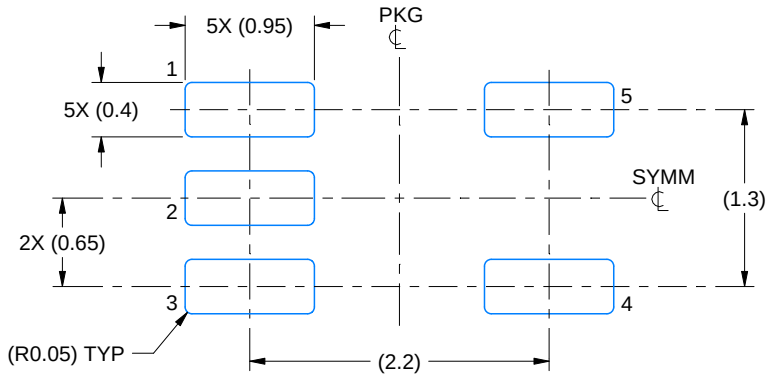


LAND PATTERN EXAMPLE
EXPOSED METAL SHOWN
SCALE:18X

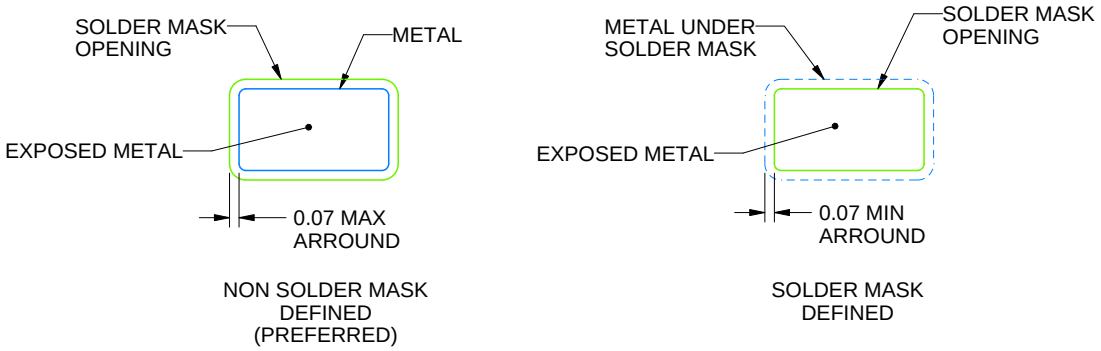


SOLDER MASK DETAILS

4214834/G 11/2024

NOTES: (continued)

7. Publication IPC-7351 may have alternate designs.
8. Solder mask tolerances between and around signal pads can vary based on board fabrication site.

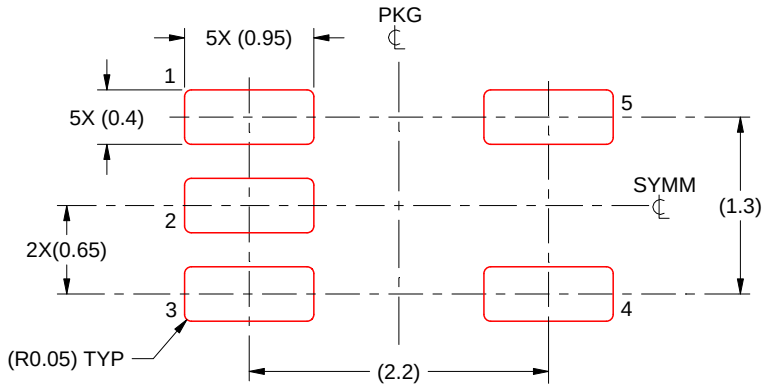


SOLDER PASTE EXAMPLE
BASED ON 0.125 THICK STENCIL
SCALE:18X

4214834/G 11/2024

NOTES: (continued)

9. Laser cutting apertures with trapezoidal walls and rounded corners may offer better paste release. IPC-7525 may have alternate design recommendations.
10. Board assembly site may have different recommendations for stencil design.

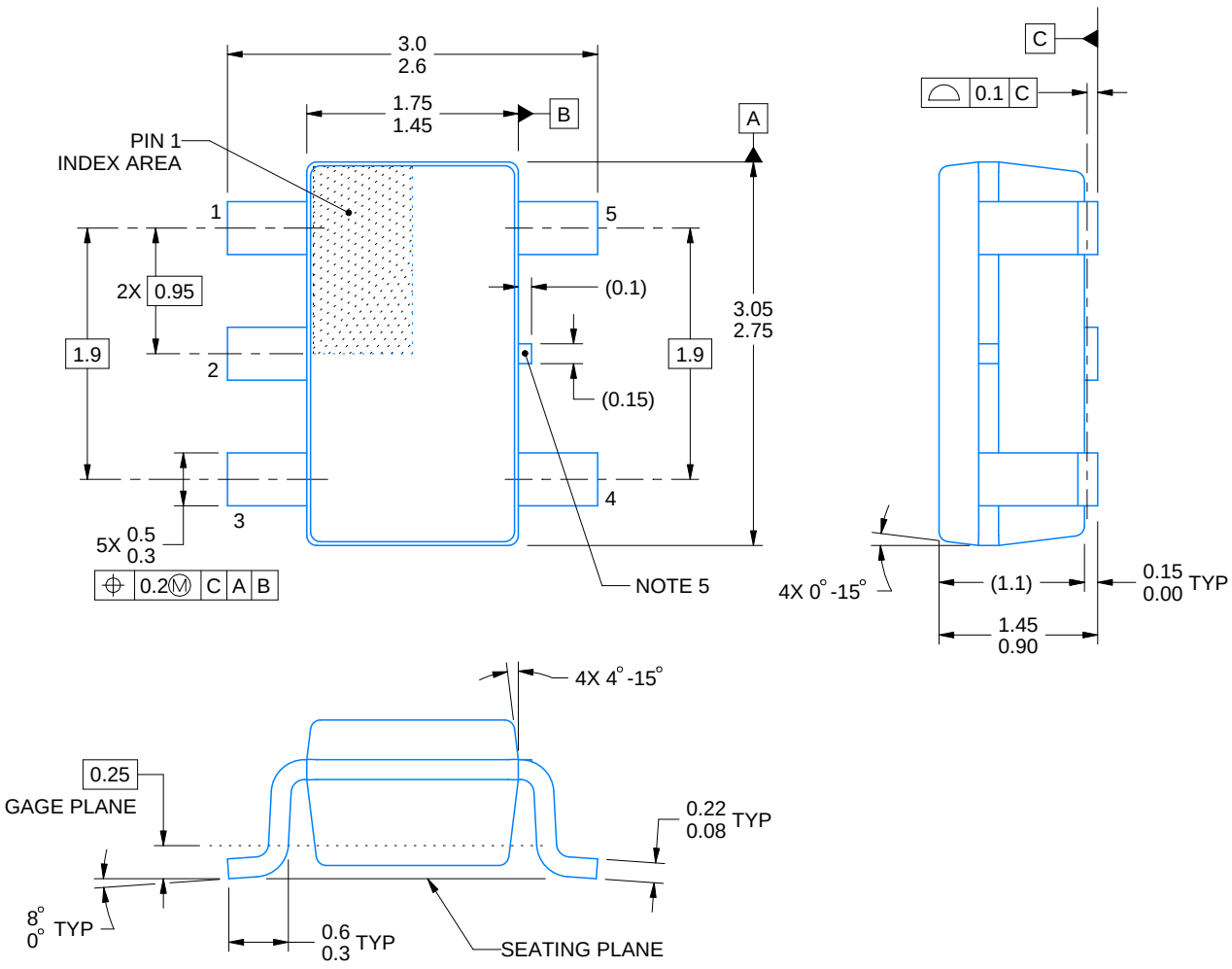


4214839/K 08/2024

NOTES:

1. All linear dimensions are in millimeters. Any dimensions in parenthesis are for reference only. Dimensioning and tolerancing per ASME Y14.5M.
2. This drawing is subject to change without notice.
3. Refernce JEDEC MO-178.
4. Body dimensions do not include mold flash, protrusions, or gate burrs. Mold flash, protrusions, or gate burrs shall not exceed 0.25 mm per side.
5. Support pin may differ or may not be present.

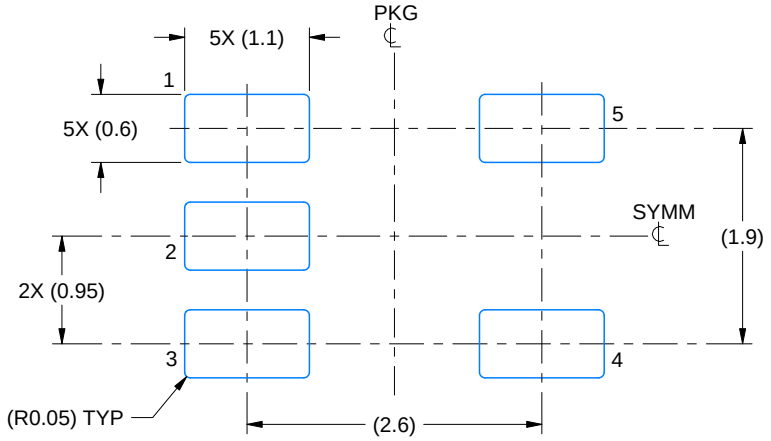


LAND PATTERN EXAMPLE
EXPOSED METAL SHOWN
SCALE:15X

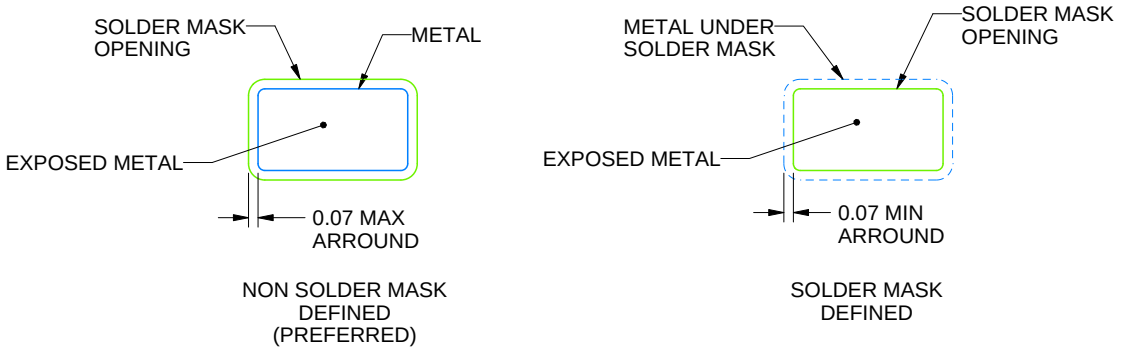


SOLDER MASK DETAILS

4214839/K 08/2024

NOTES: (continued)

6. Publication IPC-7351 may have alternate designs.
7. Solder mask tolerances between and around signal pads can vary based on board fabrication site.

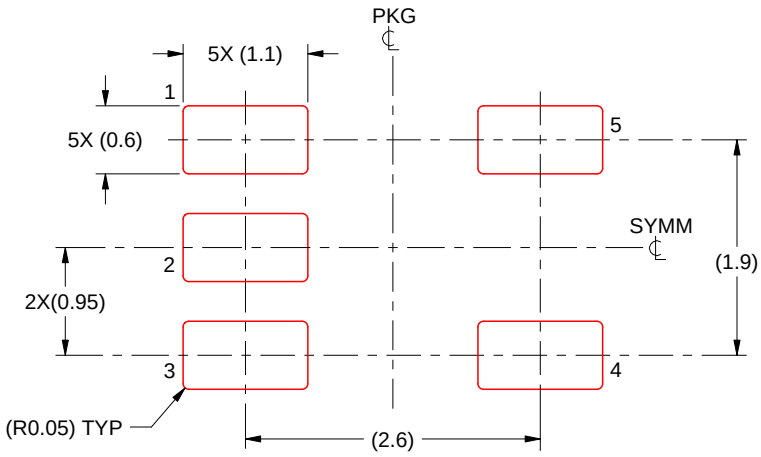


SOLDER PASTE EXAMPLE
BASED ON 0.125 mm THICK STENCIL
SCALE:15X

4214839/K 08/2024

NOTES: (continued)

8. Laser cutting apertures with trapezoidal walls and rounded corners may offer better paste release. IPC-7525 may have alternate design recommendations.
9. Board assembly site may have different recommendations for stencil design.

# 重要通知和免责声明

TI“按原样”提供技术和可靠性数据（包括数据表）、设计资源（包括参考设计）、应用或其他设计建议、网络工具、安全信息和其他资源，不保证没有瑕疵且不做出任何明示或暗示的担保，包括但不限于对适销性、与某特定用途的适用性或不侵犯任何第三方知识产权的暗示担保。

这些资源可供使用 TI 产品进行设计的熟练开发人员使用。您将自行承担以下全部责任：(1) 针对您的应用选择合适的 TI 产品，(2) 设计、验证并测试您的应用，(3) 确保您的应用满足相应标准以及任何其他安全、安保法规或其他要求。

这些资源如有变更，恕不另行通知。TI 授权您仅可将这些资源用于研发本资源所述的 TI 产品的相关应用。严禁以其他方式对这些资源进行复制或展示。您无权使用任何其他 TI 知识产权或任何第三方知识产权。对于因您对这些资源的使用而对 TI 及其代表造成的任何索赔、损害、成本、损失和债务，您将全额赔偿，TI 对此概不负责。

TI 提供的产品受 TI 销售条款)、TI 通用质量指南 或 ti.com 上其他适用条款或 TI 产品随附的其他适用条款的约束。TI 提供这些资源并不会扩展或以其他方式更改 TI 针对 TI 产品发布的适用的担保或担保免责声明。 除非德州仪器 (TI) 明确将某产品指定为定制产品或客户特定产品，否则其产品均为按确定价格收入目录的标准通用器件。

TI 反对并拒绝您可能提出的任何其他或不同的条款。

版权所有 © 2026，德州仪器 (TI) 公司

最后更新日期：2025 年 10 月