SINGLE-SUPPLY VOLTAGE-LEVEL TRANSLATOR WITH NINE CONFIGURABLE GATE LOGIC FUNCTIONS

Check for Samples: SN74AUP1T57

FEATURES

- **Available in the Texas Instruments NanoStar™ Packages**
- **Single-Supply Voltage Translator**
- **1.8 V to 3.3 V (at V_{CC} = 3.3 V)**
- **2.5 V to 3.3 V (at V_{CC} = 3.3 V)**
- **1.8 V to 2.5 V (at V_{CC} = 2.5 V)**
- **3.3 V to 2.5 V (at V_{CC} = 2.5 V)**
- **Nine Configurable Gate Logic Functions**
- **Schmitt-Trigger Inputs Reject Input Noise and Provide Better Output Signal Integrity**
- **I_{off} Supports Partial-Power-Down Mode With Low Leakage Current (0.5 μA)**
- **Very Low Static and Dynamic Power Consumption**
- **Pb-Free Packages Available: SON (DRY or DSF), SOT-23 (DBV), SC-70 (DCK), and NanoStar WCSP**
- **Latch-Up Performance Exceeds 100 mA Per JESD 78, Class II**
- **ESD Performance Tested Per JESD 22**
  - **2000-V Human-Body Model (A114-B, Class II)**
  - **1000-V Charged-Device Model (C101)**
- **Related Devices: SN74AUP1T58, SN74AUP1T97, and SN74AUP1T98**

DBV OR DCK PACKAGE
(TOP VIEW)

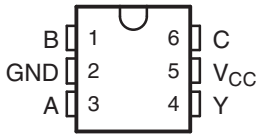

DRY OR DSF PACKAGE
(TOP VIEW)

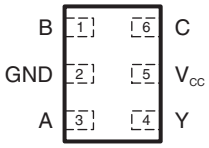

YFP OR YZP PACKAGE
(TOP VIEW)

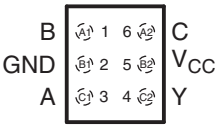

DESCRIPTION/ORDERING INFORMATION

AUP technology is the industry's lowest-power logic technology designed for use in battery-operated or battery backed-up equipment. The SN74AUP1T57 is designed for logic-level translation applications with input switching levels that accept 1.8-V LVCMOS signals, while operating from either a single 3.3-V or 2.5-V V_{CC} supply.

The wide V_{CC} range of 2.3 V to 3.6 V allows the possibility of battery voltage drop during system operation and ensures normal operation between this range.

Schmitt-trigger inputs (ΔV_T = 210 mV between positive and negative input transitions) offer improved noise immunity during switching transitions, which is especially useful on analog mixed-mode designs. Schmitt-trigger inputs reject input noise, ensure integrity of output signals, and allow for slow input signal transition.

The SN74AUP1T57 can be easily configured to perform a required gate function by connecting A, B, and C inputs to V_{CC} or ground (see Function Selection table). Up to nine commonly used logic gate functions can be performed.

Please be aware that an important notice concerning availability, standard warranty, and use in critical applications of Texas Instruments semiconductor products and disclaimers thereto appears at the end of this data sheet.

NanoStar is a trademark of Texas Instruments.

PRODUCTION DATA information is current as of publication date. Products conform to specifications per the terms of the Texas Instruments standard warranty. Production processing does not necessarily include testing of all parameters.

Copyright © 2004–2010, Texas Instruments Incorporated

I_{off} is a feature that allows for powered-down conditions (V_{CC} = 0 V) and is important in portable and mobile applications. When V_{CC} = 0 V, signals in the range from 0 V to 3.6 V can be applied to the inputs and outputs of the device. No damage occurs to the device under these conditions.

The SN74AUP1T57 is designed with optimized current-drive capability of 4 mA to reduce line reflections, overshoot, and undershoot caused by high-drive outputs.

NanoStar package technology is a major breakthrough in IC packaging concepts, using the die as the package.

ORDERING INFORMATION(1)

T_A	PACKAGE(2)		ORDERABLE PART NUMBER	TOP-SIDE MARKING(3)
–40°C to 85°C	NanoStar™ – WCSP (DSBGA) 0.23-mm Large Bump – YZP (Pb-free)	Reel of 3000	SN74AUP1T57YZPR	_ _ _TG_
	NanoStar™ – WCSP (DSBGA) 0.23-mm Large Bump – YFP	Reel of 3000	SN74AUP1T57YFPR	_ _ _TG_
	QFN – DRY	Reel of 5000	SN74AUP1T57DRYR	TG
	uQFN – DSF	Reel of 5000	SN74AUP1T57DSFR	TG
	SOT (SOT-23) – DBV	Reel of 3000	SN74AUP1T57DBVR	HT3_
	SOT (SC-70) – DCK	Reel of 3000	SN74AUP1T57DCKR	TG_

(1) For the most current package and ordering information, see the Package Option Addendum at the end of this document, or see the TI web site at www.ti.com.
(2) Package drawings, thermal data, and symbolization are available at www.ti.com/packaging.
(3) DBV/DCK: The actual top-side marking has one additional character that designates the wafer fab/assembly site.
YFP/YZP: The actual top-side marking has three preceding characters to denote year, month, and sequence code, and one following character to designate the wafer fab/assembly site. Pin 1 identifier indicates solder-bump composition (1 = SnPb, ● = Pb-free).

FUNCTION SELECTION TABLE

LOGIC FUNCTION	FIGURE NO.
2-input AND gate	5
2-input NOR gate with both inputs inverted	5
2-input NAND gate with inverted input	6, 7
2-input OR gate with inverted input	6, 7
2-input AND gate with both inputs inverted	8
2-input NOR gate	8
2-input XNOR gate	9
Inverter	10
Noninverted buffer	11

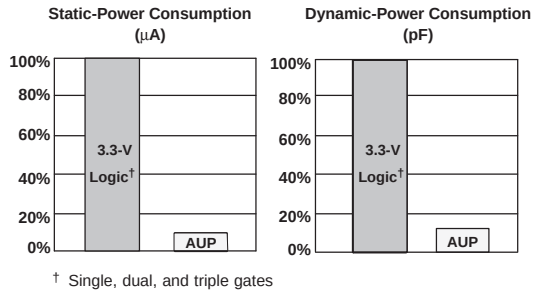

Figure 1. AUP – The Lowest-Power Family

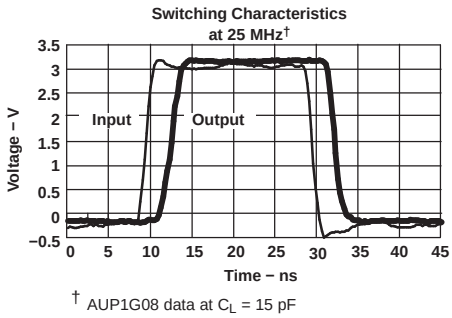

Figure 2. Excellent Signal Integrity

Copyright © 2004–2010, Texas Instruments Incorporated

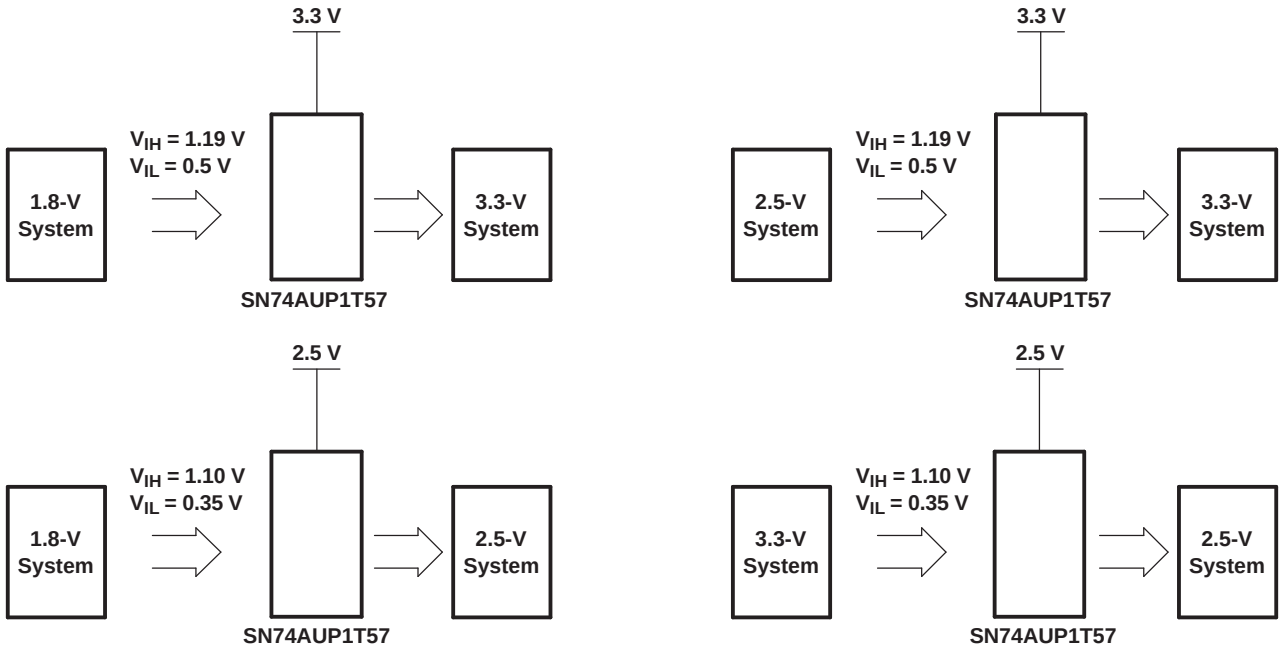

Figure 3. Possible Voltage-Translation Combinations

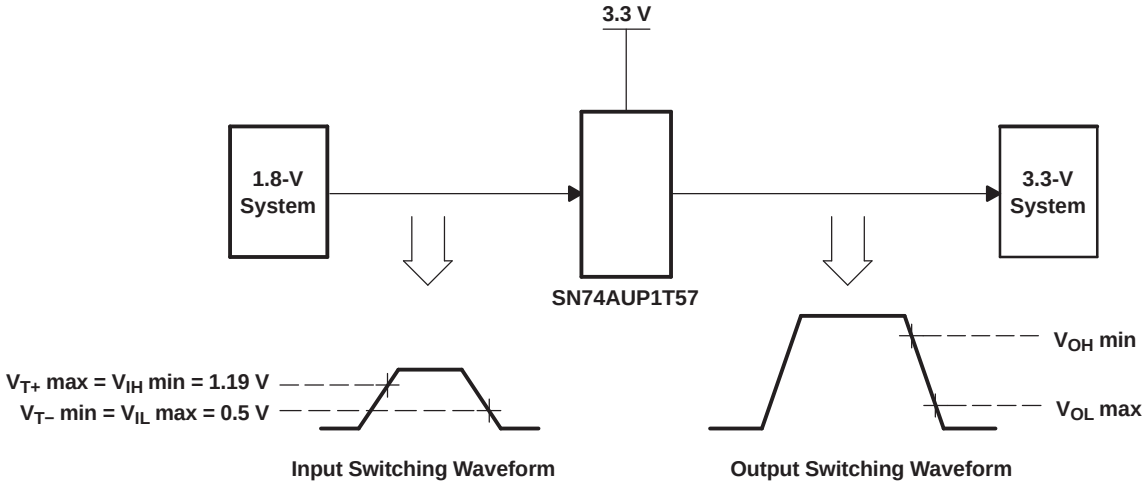

Figure 4. Switching Thresholds for 1.8-V to 3.3-V Translation

FUNCTION TABLE

INPUTS			OUTPUT
C	B	A	Y
L	L	L	H
L	L	H	L
L	H	L	H
L	H	H	L
H	L	L	L
H	L	H	L
H	H	L	H
H	H	H	H

LOGIC DIAGRAM (POSITIVE LOGIC)

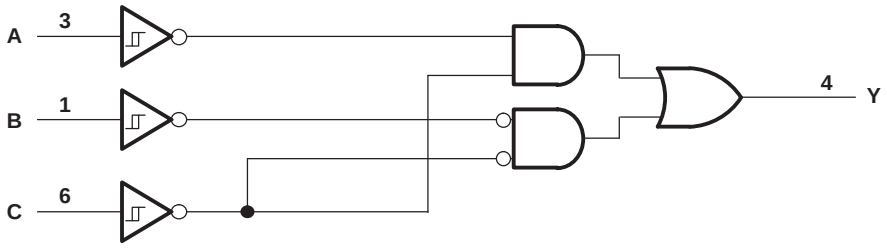

LOGIC CONFIGURATIONS

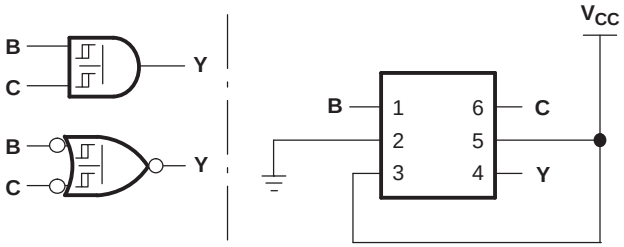

Figure 5. 08/14+2: 2-Input AND Gate
2-Input NOR Gate With Both Inputs Inverted

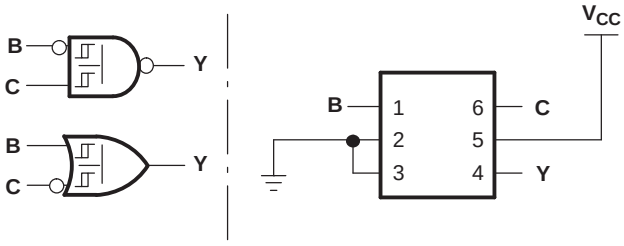

Figure 6. 14+00/14+32: 2-Input NAND Gate With Inverted B Input
2-Input OR Gate With Inverted Input

Copyright © 2004–2010, Texas Instruments Incorporated

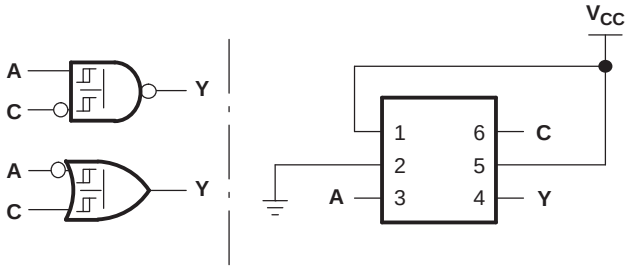

Figure 7. 14+00/14+32: 2-Input NAND Gate With Inverted C Input 2-Input OR Gate With Inverted Input

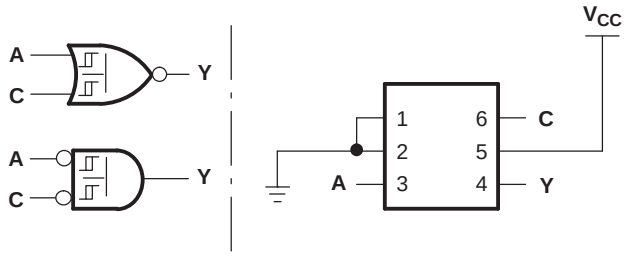

Figure 8. 02/14+08: 2-Input OR Gate 2-Input AND Gate With Both Inputs Inverted

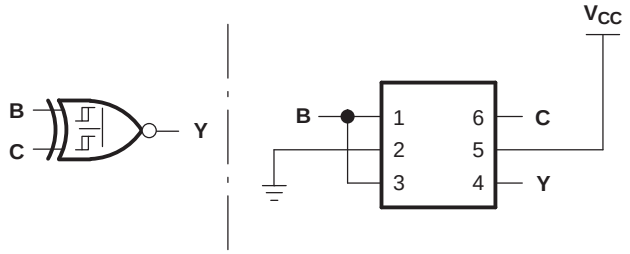

Figure 9. 86+04: 2-Input XNOR Gate

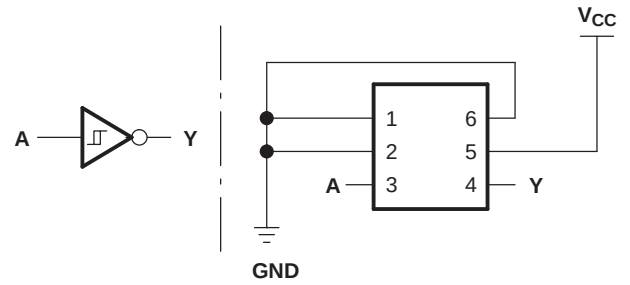

Figure 10. 04/14: Inverter

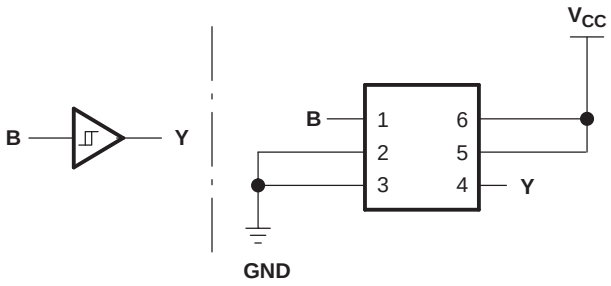

Figure 11. 17/34: Noninverted Buffer

Copyright © 2004–2010, Texas Instruments Incorporated

ABSOLUTE MAXIMUM RATINGS(1)

over operating free-air temperature range (unless otherwise noted)

			MIN	MAX	UNIT
V_{CC}	Supply voltage range		–0.5	4.6	V
V_I	Input voltage range(2)		–0.5	4.6	V
V_O	Voltage range applied to any output in the high-impedance or power-off state(2)		–0.5	4.6	V
V_O	Output voltage range in the high or low state(2)		–0.5	V_{CC} + 0.5	V
I_{IK}	Input clamp current	V_I < 0		–50	mA
I_{OK}	Output clamp current	V_O < 0		–50	mA
I_O	Continuous output current			±20	mA
	Continuous current through V_{CC} or GND			±50	mA
θ_{JA}	Package thermal impedance(3)	DBV package		165	°C/W
		DCK package		259	
		DRY package		340	
		DSF package		300	
		YFP package		123	
		YZP package		123	
T_{stg}	Storage temperature range		–65	150	°C

(1) Stresses beyond those listed under "absolute maximum ratings" may cause permanent damage to the device. These are stress ratings only, and functional operation of the device at these or any other conditions beyond those indicated under "recommended operating conditions" is not implied. Exposure to absolute-maximum-rated conditions for extended periods may affect device reliability.
(2) The input negative-voltage and output voltage ratings may be exceeded if the input and output current ratings are observed.
(3) The package thermal impedance is calculated in accordance with JESD 51-7.

RECOMMENDED OPERATING CONDITIONS(1)

			MIN	MAX	UNIT
V_{CC}	Supply voltage		2.3	3.6	V
V_I	Input voltage		0	3.6	V
V_O	Output voltage		0	V_{CC}	V
I_{OH}	High-level output current	V_{CC} = 2.3 V		–3.1	mA
		V_{CC} = 3 V		–4	
I_{OL}	Low-level output current	V_{CC} = 2.3 V		3.1	mA
		V_{CC} = 3 V		4	
T_A	Operating free-air temperature		–40	85	°C

(1) All unused inputs of the device must be held at V_{CC} or GND to ensure proper device operation. See the TI application report *Implications of Slow or Floating CMOS Inputs*, literature number SCBA004.

Copyright © 2004–2010, Texas Instruments Incorporated

ELECTRICAL CHARACTERISTICS

over recommended operating free-air temperature range (unless otherwise noted)

PARAMETER	TEST CONDITIONS	V_{CC}	T_A = 25°C			T_A = –40°C to 85°C		UNIT
			MIN	TYP	MAX	MIN	MAX	
V_{T+} Positive-going input threshold voltage		2.3 V to 2.7 V	0.6		1.1	0.6	1.1	V
		3 V to 3.6 V	0.75		1.16	0.75	1.19	
$V_{T–}$ Negative-going input threshold voltage		2.3 V to 2.7 V	0.35		0.6	0.35	0.6	V
		3 V to 3.6 V	0.5		0.85	0.5	0.85	
ΔV_T Hysteresis ($V_{T+} – V_{T–}$)		2.3 V to 2.7 V	0.23		0.6	0.1	0.6	V
		3 V to 3.6 V	0.25		0.56	0.15	0.56	
V_{OH}	I_{OH} = –20 μA	2.3 V to 3.6 V	V_{CC} – 0.1			V_{CC} – 0.1		V
	I_{OH} = –2.3 mA	2.3 V	2.05			1.97		
	I_{OH} = –3.1 mA		1.9			1.85		
	I_{OH} = –2.7 mA	3 V	2.72			2.67		
	I_{OH} = –4 mA		2.6			2.55		
V_{OL}	I_{OL} = 20 μA	2.3 V to 3.6 V			0.1		0.1	V
	I_{OL} = 2.3 mA	2.3 V			0.31		0.33	
	I_{OL} = 3.1 mA				0.44		0.45	
	I_{OL} = 2.7 mA	3 V			0.31		0.33	
	I_{OL} = 4 mA				0.44		0.45	
I_I All inputs	V_I = 3.6 V or GND	0 V to 3.6 V			0.1		0.5	μA
I_{off}	V_I or V_O = 0 V to 3.6 V	0 V			0.1		0.5	μA
ΔI_{off}	V_I or V_O = 3.6 V	0 V to 0.2 V			0.2		0.5	μA
I_{CC}	V_I = 3.6 V or GND, I_O = 0	2.3 V to 3.6 V			0.5		0.9	μA
ΔI_{CC}	One input at 0.3 V or 1.1 V, Other inputs at 0 or V_{CC}, I_O = 0	2.3 V to 2.7 V					4	μA
	One input at 0.45 V or 1.2 V, Other inputs at 0 or V_{CC}, I_O = 0	3 V to 3.6 V					12	
C_i	V_I = V_{CC} or GND	3.3 V		1.5				pF
C_o	V_O = V_{CC} or GND	3.3 V		3				pF

SWITCHING CHARACTERISTICS

over recommended operating free-air temperature range, V_{CC} = 2.5 V ± 0.2 V, V_I = 1.8 V ± 0.15 V (unless otherwise noted) (see Figure 12)

PARAMETER	FROM (INPUT)	TO (OUTPUT)	C_L	T_A = 25°C			T_A = –40°C to 85°C		UNIT
				MIN	TYP	MAX	MIN	MAX	
t_{pd}	A, B, or C	Y	5 pF	1.8	2.3	2.9	0.5	6.8	ns
			10 pF	2.3	2.8	3.4	1	7.9	
			15 pF	2.6	3.1	3.8	1	8.7	
			30 pF	3.8	4.4	5.1	1.5	10.8	

Copyright © 2004–2010, Texas Instruments Incorporated

SWITCHING CHARACTERISTICS

over recommended operating free-air temperature range, V_{CC} = 2.5 V ± 0.2 V, V_I = 2.5 V ± 0.2 V (unless otherwise noted) (see Figure 12)

PARAMETER	FROM (INPUT)	TO (OUTPUT)	C_L	T_A = 25°C			T_A = –40°C to 85°C		UNIT
				MIN	TYP	MAX	MIN	MAX	
t_{pd}	A, B, or C	Y	5 pF	1.8	2.3	3.1	0.5	6	ns
			10 pF	2.2	2.8	3.5	1	7.1	
			15 pF	2.6	3.2	5.2	1	7.9	
			30 pF	3.7	4.4	5.2	1.5	10	

SWITCHING CHARACTERISTICS

over recommended operating free-air temperature range, V_{CC} = 2.5 V ± 0.2 V, V_I = 3.3 V ± 0.3 V (unless otherwise noted) (see Figure 12)

PARAMETER	FROM (INPUT)	TO (OUTPUT)	C_L	T_A = 25°C			T_A = –40°C to 85°C		UNIT
				MIN	TYP	MAX	MIN	MAX	
t_{pd}	A, B, or C	Y	5 pF	2	2.7	3.5	0.5	5.5	ns
			10 pF	2.4	3.1	3.9	1	6.5	
			15 pF	2.8	3.5	4.3	1	7.4	
			30 pF	4	4.7	5.5	1.5	9.5	

SWITCHING CHARACTERISTICS

over recommended operating free-air temperature range, V_{CC} = 3.3 V ± 0.3 V, V_I = 1.8 V ± 0.15 V (unless otherwise noted) (see Figure 12)

PARAMETER	FROM (INPUT)	TO (OUTPUT)	C_L	T_A = 25°C			T_A = –40°C to 85°C		UNIT
				MIN	TYP	MAX	MIN	MAX	
t_{pd}	A, B, or C	Y	5 pF	1.6	2	2.5	0.5	8	ns
			10 pF	2	2.4	2.9	1	8.5	
			15 pF	2.3	2.8	3.3	1	9.1	
			30 pF	3.4	3.9	4.4	1.5	9.8	

SWITCHING CHARACTERISTICS

over recommended operating free-air temperature range, V_{CC} = 3.3 V ± 0.3 V, V_I = 2.5 V ± 0.2 V (unless otherwise noted) (see Figure 12)

PARAMETER	FROM (INPUT)	TO (OUTPUT)	C_L	T_A = 25°C			T_A = –40°C to 85°C		UNIT
				MIN	TYP	MAX	MIN	MAX	
t_{pd}	A, B, or C	Y	5 pF	1.6	1.9	2.4	0.5	5.3	ns
			10 pF	2	2.3	2.7	1	6.1	
			15 pF	2.3	2.7	3.1	1	6.8	
			30 pF	3.4	3.8	4.2	1.5	8.5	

Copyright © 2004–2010, Texas Instruments Incorporated

SWITCHING CHARACTERISTICS

over recommended operating free-air temperature range, V_{CC} = 3.3 V ± 0.3 V, V_I = 3.3 V ± 0.3 V (unless otherwise noted) (see Figure 12)

PARAMETER	FROM (INPUT)	TO (OUTPUT)	C_L	T_A = 25°C			T_A = –40°C to 85°C		UNIT
				MIN	TYP	MAX	MIN	MAX	
t_{pd}	A, B, or C	Y	5 pF	1.6	2.1	2.7	0.5	4.7	ns
			10 pF	2	2.4	3	1	5.7	
			15 pF	2.3	2.7	3.3	1	6.2	
			30 pF	3.4	3.8	4.4	1.5	7.8	

OPERATING CHARACTERISTICS

T_A = 25°C

PARAMETER		TEST CONDITIONS	V_{CC} = 2.5 V	V_{CC} = 3.3 V	UNIT
			TYP	TYP	
C_{pd}	Power dissipation capacitance	f = 10 MHz	4	5	pF

Copyright © 2004–2010, Texas Instruments Incorporated

PARAMETER MEASUREMENT INFORMATION

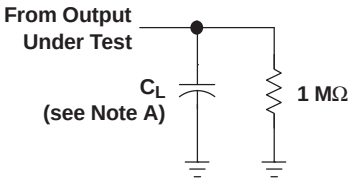

LOAD CIRCUIT

	V_{CC} = 2.5 V ± 0.2 V	V_{CC} = 3.3 V ± 0.3 V
C_L	5, 10, 15, 30 pF	5, 10, 15, 30 pF
V_{MI}	$V_I/2$	$V_I/2$
V_{MO}	$V_{CC}/2$	$V_{CC}/2$

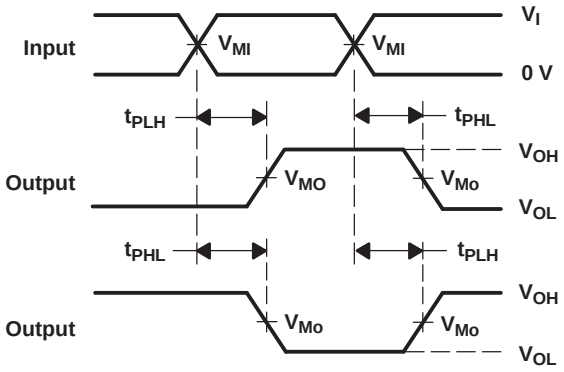

VOLTAGE WAVEFORMS
PROPAGATION DELAY TIMES
INVERTING AND NONINVERTING OUTPUTS

NOTES: A. C_L includes probe and jig capacitance.
B. All input pulses are supplied by generators having the following characteristics: PRR ≤ 10 MHz, Z_O = 50 Ω, slew rate ≥ 1 V/ns.
C. The outputs are measured one at a time, with one transition per measurement.
D. t_{PLH} and t_{PHL} are the same as t_{pd}.

Figure 12. Load Circuit and Voltage Waveforms

Copyright © 2004–2010, Texas Instruments Incorporated

PACKAGING INFORMATION

Orderable part number	Status (1)	Material type (2)	Package | Pins	Package qty | Carrier	RoHS (3)	Lead finish/ Ball material (4)	MSL rating/ Peak reflow (5)	Op temp (°C)	Part marking (6)
SN74AUP1T57DBVR	Active	Production	SOT-23 (DBV) | 6	3000 | LARGE T&R	Yes	NIPDAU	Level-1-260C-UNLIM	-40 to 85	(HT3F, HT3R)
SN74AUP1T57DBVR.B	Active	Production	SOT-23 (DBV) | 6	3000 | LARGE T&R	Yes	NIPDAU	Level-1-260C-UNLIM	-40 to 85	(HT3F, HT3R)
SN74AUP1T57DBVRG4	Active	Production	SOT-23 (DBV) | 6	3000 | LARGE T&R	Yes	NIPDAU	Level-1-260C-UNLIM	-40 to 85	HT3R
SN74AUP1T57DBVRG4.B	Active	Production	SOT-23 (DBV) | 6	3000 | LARGE T&R	Yes	NIPDAU	Level-1-260C-UNLIM	-40 to 85	HT3R
SN74AUP1T57DBVT	Active	Production	SOT-23 (DBV) | 6	250 | SMALL T&R	Yes	NIPDAU	Level-1-260C-UNLIM	-40 to 85	(HT3F, HT3R)
SN74AUP1T57DBVT.B	Active	Production	SOT-23 (DBV) | 6	250 | SMALL T&R	Yes	NIPDAU	Level-1-260C-UNLIM	-40 to 85	(HT3F, HT3R)
SN74AUP1T57DCKR	Active	Production	SC70 (DCK) | 6	3000 | LARGE T&R	Yes	NIPDAU | SN	Level-1-260C-UNLIM	-40 to 85	(TGF, TGR)
SN74AUP1T57DCKR.B	Active	Production	SC70 (DCK) | 6	3000 | LARGE T&R	Yes	SN	Level-1-260C-UNLIM	-40 to 85	(TGF, TGR)
SN74AUP1T57DCKRG4	Active	Production	SC70 (DCK) | 6	3000 | LARGE T&R	Yes	NIPDAU	Level-1-260C-UNLIM	-40 to 85	TGR
SN74AUP1T57DCKRG4.B	Active	Production	SC70 (DCK) | 6	3000 | LARGE T&R	Yes	NIPDAU	Level-1-260C-UNLIM	-40 to 85	TGR
SN74AUP1T57DRYR	Active	Production	SON (DRY) | 6	5000 | LARGE T&R	Yes	NIPDAUAG	Level-1-260C-UNLIM	-40 to 85	TG
SN74AUP1T57DRYR.B	Active	Production	SON (DRY) | 6	5000 | LARGE T&R	Yes	NIPDAUAG	Level-1-260C-UNLIM	-40 to 85	TG
SN74AUP1T57DSFR	Active	Production	SON (DSF) | 6	5000 | LARGE T&R	Yes	NIPDAU | NIPDAUAG	Level-1-260C-UNLIM	-40 to 85	TG
SN74AUP1T57DSFR.B	Active	Production	SON (DSF) | 6	5000 | LARGE T&R	Yes	NIPDAU	Level-1-260C-UNLIM	-40 to 85	TG
SN74AUP1T57DSFRG4	Active	Production	SON (DSF) | 6	5000 | LARGE T&R	Yes	NIPDAU	Level-1-260C-UNLIM	-40 to 85	TG
SN74AUP1T57DSFRG4.B	Active	Production	SON (DSF) | 6	5000 | LARGE T&R	Yes	NIPDAU	Level-1-260C-UNLIM	-40 to 85	TG

(1) **Status:** For more details on status, see our product life cycle.

(2) **Material type:** When designated, preproduction parts are prototypes/experimental devices, and are not yet approved or released for full production. Testing and final process, including without limitation quality assurance, reliability performance testing, and/or process qualification, may not yet be complete, and this item is subject to further changes or possible discontinuation. If available for ordering, purchases will be subject to an additional waiver at checkout, and are intended for early internal evaluation purposes only. These items are sold without warranties of any kind.

(3) **RoHS values:** Yes, No, RoHS Exempt. See the TI RoHS Statement for additional information and value definition.

(4) **Lead finish/Ball material:** Parts may have multiple material finish options. Finish options are separated by a vertical ruled line. Lead finish/Ball material values may wrap to two lines if the finish value exceeds the maximum column width.

(5) **MSL rating/Peak reflow:** The moisture sensitivity level ratings and peak solder (reflow) temperatures. In the event that a part has multiple moisture sensitivity ratings, only the lowest level per JEDEC standards is shown. Refer to the shipping label for the actual reflow temperature that will be used to mount the part to the printed circuit board.

(6) **Part marking:** There may be an additional marking, which relates to the logo, the lot trace code information, or the environmental category of the part.

Multiple part markings will be inside parentheses. Only one part marking contained in parentheses and separated by a "~" will appear on a part. If a line is indented then it is a continuation of the previous line and the two combined represent the entire part marking for that device.

Important Information and Disclaimer: The information provided on this page represents TI's knowledge and belief as of the date that it is provided. TI bases its knowledge and belief on information provided by third parties, and makes no representation or warranty as to the accuracy of such information. Efforts are underway to better integrate information from third parties. TI has taken and continues to take reasonable steps to provide representative and accurate information but may not have conducted destructive testing or chemical analysis on incoming materials and chemicals. TI and TI suppliers consider certain information to be proprietary, and thus CAS numbers and other limited information may not be available for release.

In no event shall TI's liability arising out of such information exceed the total purchase price of the TI part(s) at issue in this document sold by TI to Customer on an annual basis.

TAPE AND REEL INFORMATION

REEL DIMENSIONS

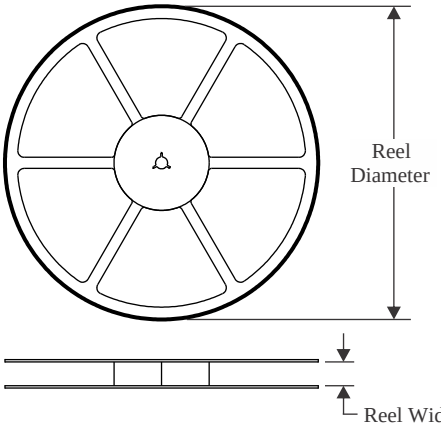

TAPE DIMENSIONS

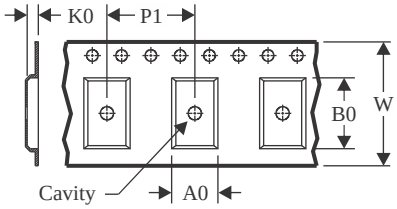

A0	Dimension designed to accommodate the component width
B0	Dimension designed to accommodate the component length
K0	Dimension designed to accommodate the component thickness
W	Overall width of the carrier tape
P1	Pitch between successive cavity centers

QUADRANT ASSIGNMENTS FOR PIN 1 ORIENTATION IN TAPE

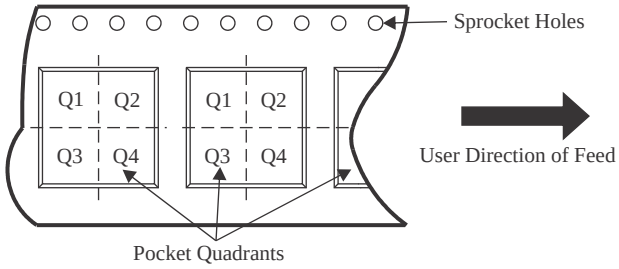

*All dimensions are nominal

Device	Package Type	Package Drawing	Pins	SPQ	Reel Diameter (mm)	Reel Width W1 (mm)	A0 (mm)	B0 (mm)	K0 (mm)	P1 (mm)	W (mm)	Pin1 Quadrant
SN74AUP1T57DBVR	SOT-23	DBV	6	3000	180.0	8.4	3.23	3.17	1.37	4.0	8.0	Q3
SN74AUP1T57DBVRG4	SOT-23	DBV	6	3000	180.0	8.4	3.23	3.17	1.37	4.0	8.0	Q3
SN74AUP1T57DBVT	SOT-23	DBV	6	250	180.0	8.4	3.23	3.17	1.37	4.0	8.0	Q3
SN74AUP1T57DCKR	SC70	DCK	6	3000	180.0	8.4	2.41	2.41	1.2	4.0	8.0	Q3
SN74AUP1T57DCKR	SC70	DCK	6	3000	178.0	8.4	2.25	2.45	1.2	4.0	8.0	Q3
SN74AUP1T57DCKR	SC70	DCK	6	3000	180.0	8.4	2.3	2.55	1.2	4.0	8.0	Q3
SN74AUP1T57DCKRG4	SC70	DCK	6	3000	180.0	8.4	2.41	2.41	1.2	4.0	8.0	Q3
SN74AUP1T57DRYR	SON	DRY	6	5000	180.0	8.4	1.25	1.6	0.7	4.0	8.0	Q1
SN74AUP1T57DSFR	SON	DSF	6	5000	180.0	8.4	1.16	1.16	0.5	4.0	8.0	Q2
SN74AUP1T57DSFR	SON	DSF	6	5000	180.0	8.4	1.16	1.16	0.63	4.0	8.0	Q2
SN74AUP1T57DSFRG4	SON	DSF	6	5000	180.0	8.4	1.16	1.16	0.5	4.0	8.0	Q2

TAPE AND REEL BOX DIMENSIONS

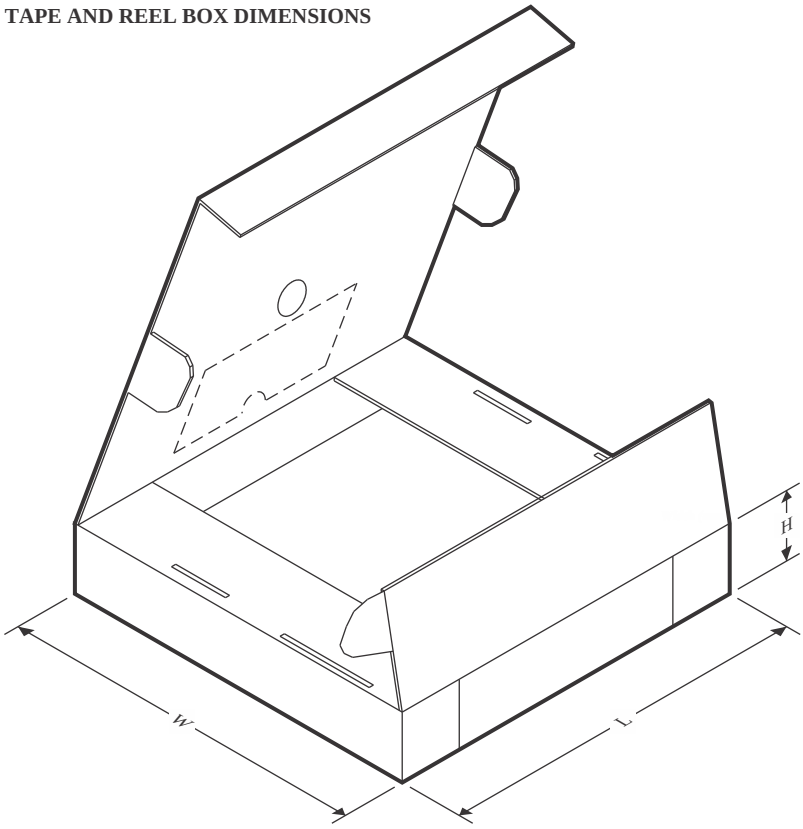

*All dimensions are nominal

Device	Package Type	Package Drawing	Pins	SPQ	Length (mm)	Width (mm)	Height (mm)
SN74AUP1T57DBVR	SOT-23	DBV	6	3000	202.0	201.0	28.0
SN74AUP1T57DBVRG4	SOT-23	DBV	6	3000	202.0	201.0	28.0
SN74AUP1T57DBVT	SOT-23	DBV	6	250	202.0	201.0	28.0
SN74AUP1T57DCKR	SC70	DCK	6	3000	202.0	201.0	28.0
SN74AUP1T57DCKR	SC70	DCK	6	3000	208.0	191.0	35.0
SN74AUP1T57DCKR	SC70	DCK	6	3000	210.0	185.0	35.0
SN74AUP1T57DCKRG4	SC70	DCK	6	3000	202.0	201.0	28.0
SN74AUP1T57DRYR	SON	DRY	6	5000	202.0	201.0	28.0
SN74AUP1T57DSFR	SON	DSF	6	5000	210.0	185.0	35.0
SN74AUP1T57DSFR	SON	DSF	6	5000	202.0	201.0	28.0
SN74AUP1T57DSFRG4	SON	DSF	6	5000	210.0	185.0	35.0

PACKAGE OUTLINE

DBV0006A

SOT-23 - 1.45 mm max height

SMALL OUTLINE TRANSISTOR

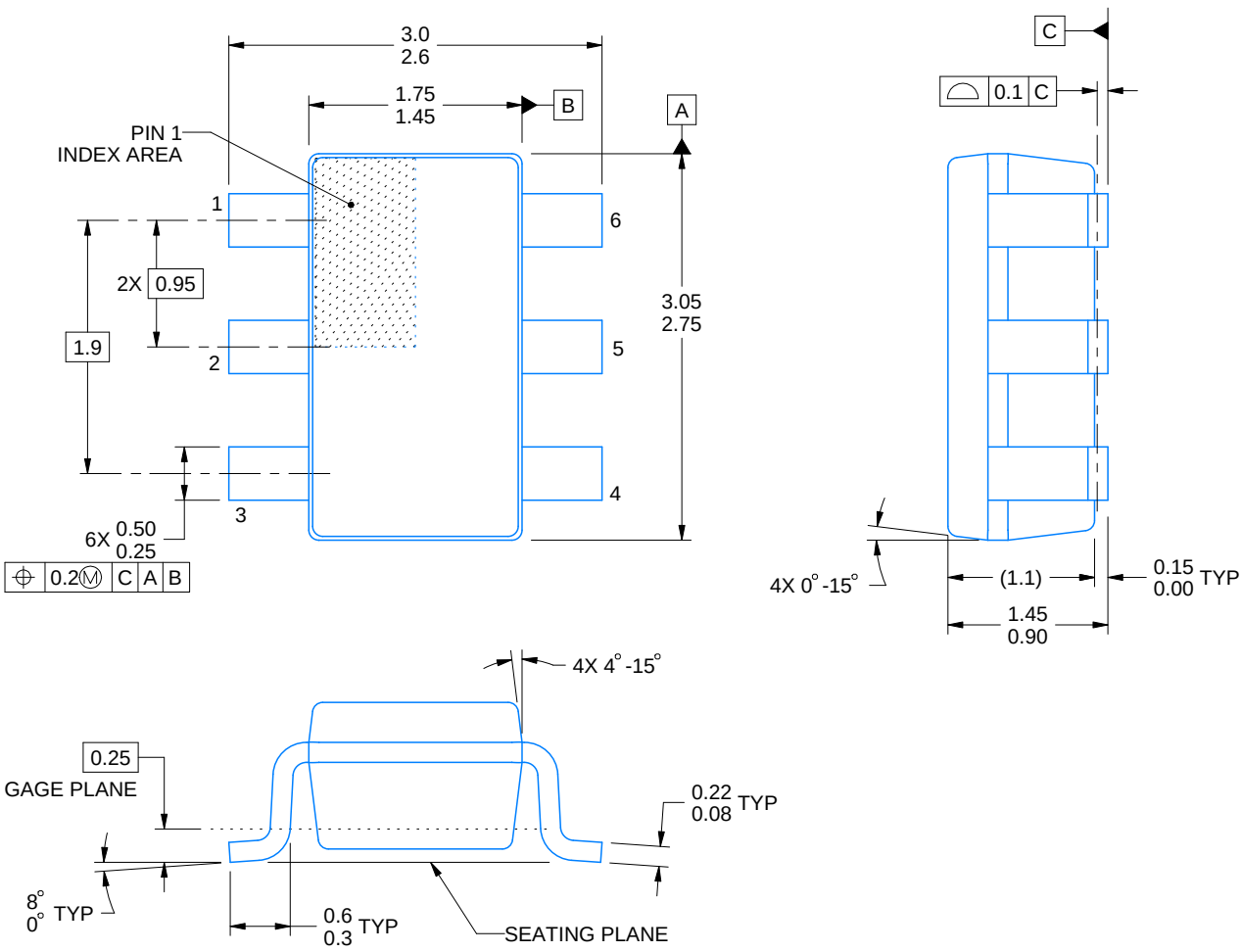

4214840/G 08/2024

NOTES:

1. All linear dimensions are in millimeters. Any dimensions in parenthesis are for reference only. Dimensioning and tolerancing per ASME Y14.5M.
2. This drawing is subject to change without notice.
3. Body dimensions do not include mold flash or protrusion. Mold flash and protrusion shall not exceed 0.25 per side.
4. Leads 1,2,3 may be wider than leads 4,5,6 for package orientation.
5. Refernce JEDEC MO-178.

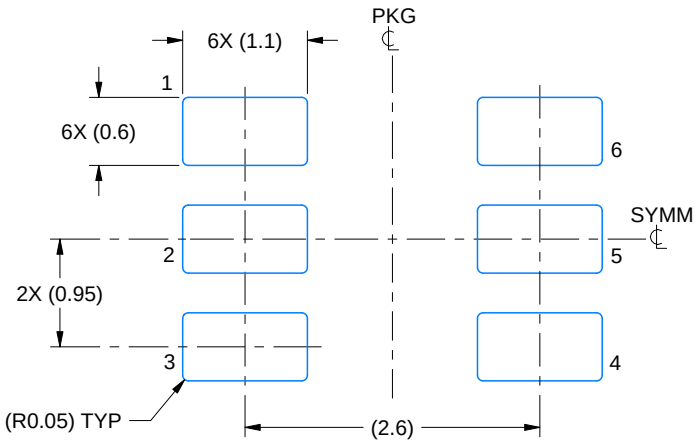

LAND PATTERN EXAMPLE
EXPOSED METAL SHOWN
SCALE:15X

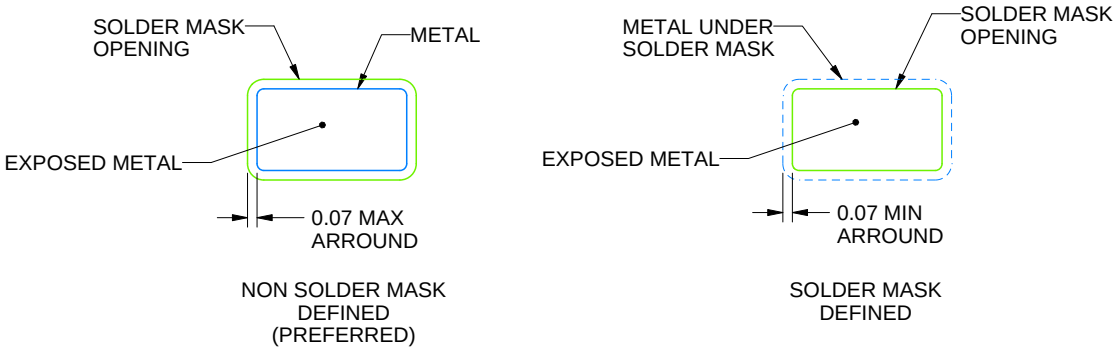

SOLDER MASK DETAILS

4214840/G 08/2024

NOTES: (continued)

6. Publication IPC-7351 may have alternate designs.
7. Solder mask tolerances between and around signal pads can vary based on board fabrication site.

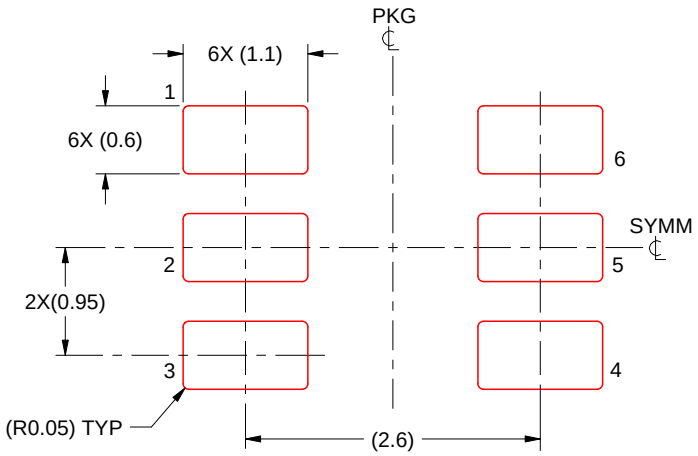

SOLDER PASTE EXAMPLE
BASED ON 0.125 mm THICK STENCIL
SCALE:15X

4214840/G 08/2024

NOTES: (continued)

8. Laser cutting apertures with trapezoidal walls and rounded corners may offer better paste release. IPC-7525 may have alternate design recommendations.
9. Board assembly site may have different recommendations for stencil design.

PACKAGE OUTLINE

DCK0006A

SOT - 1.1 max height

SMALL OUTLINE TRANSISTOR

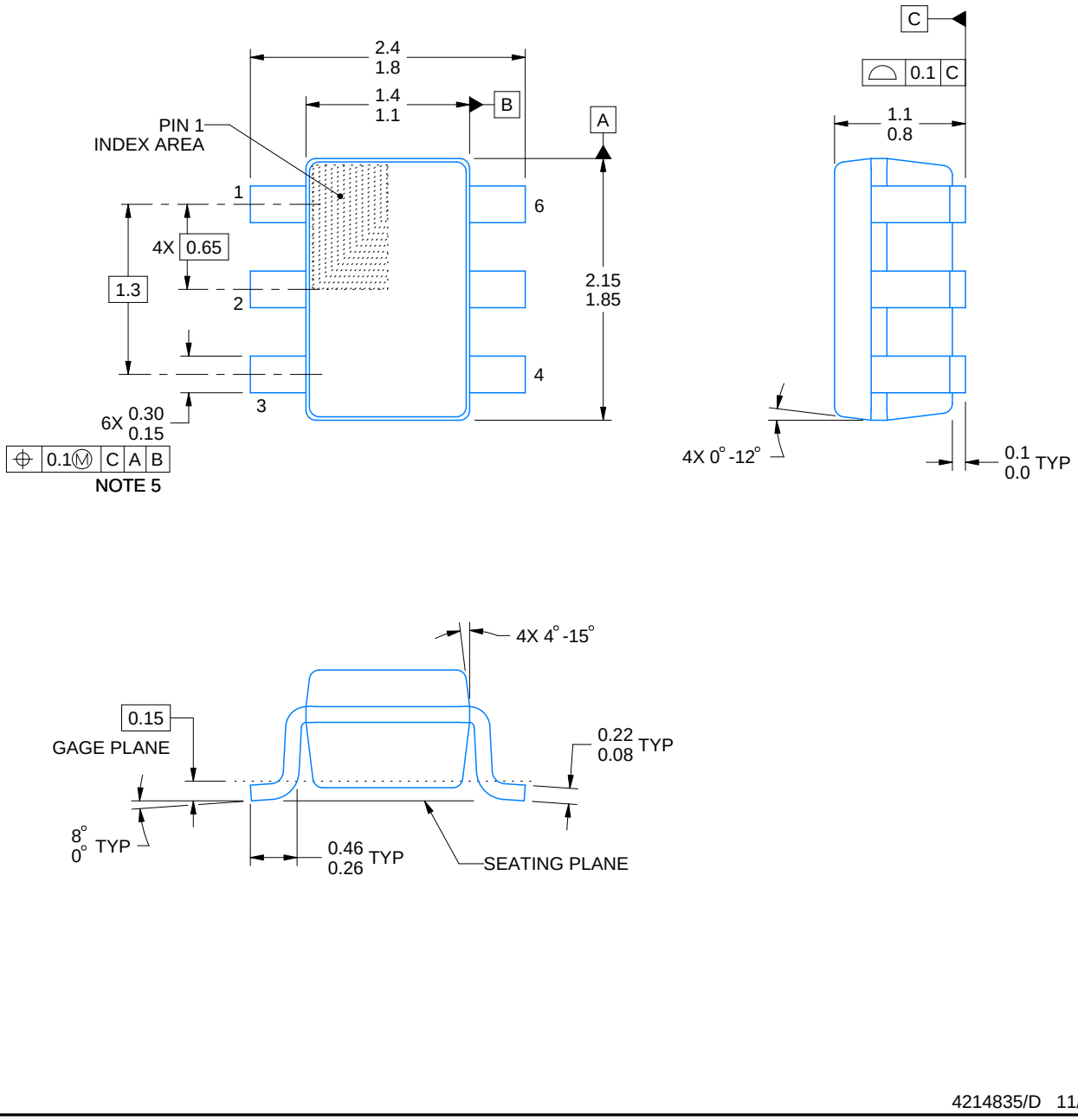

4214835/D 11/2024

NOTES:

1. All linear dimensions are in millimeters. Any dimensions in parenthesis are for reference only. Dimensioning and tolerancing per ASME Y14.5M.
2. This drawing is subject to change without notice.
3. Body dimensions do not include mold flash or protrusion. Mold flash and protrusion shall not exceed 0.15 per side.
4. Falls within JEDEC MO-203 variation AB.

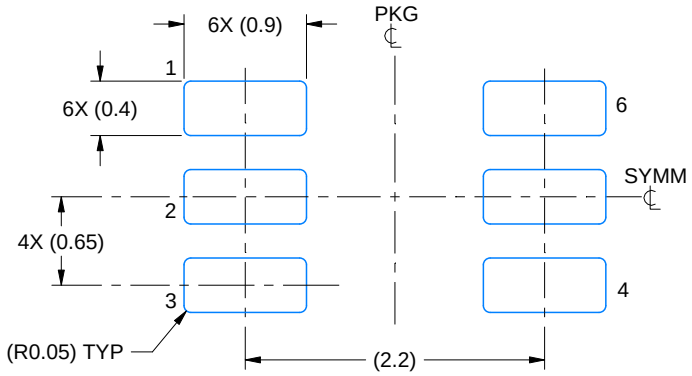

LAND PATTERN EXAMPLE
EXPOSED METAL SHOWN
SCALE:18X

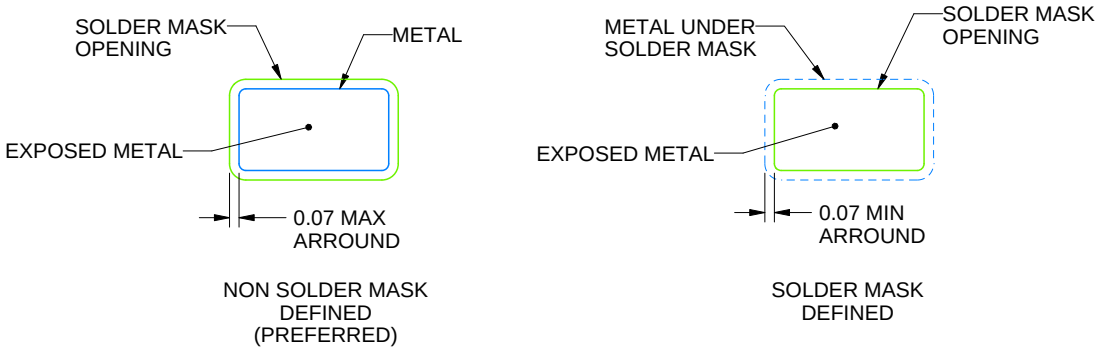

SOLDER MASK DETAILS

4214835/D 11/2024

NOTES: (continued)

5. Publication IPC-7351 may have alternate designs.
6. Solder mask tolerances between and around signal pads can vary based on board fabrication site.

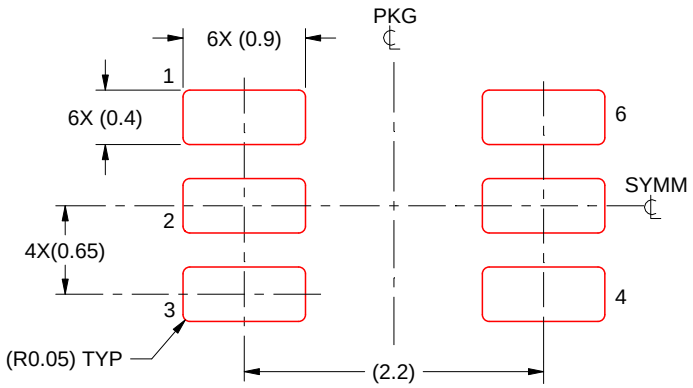

SOLDER PASTE EXAMPLE
BASED ON 0.125 THICK STENCIL
SCALE:18X

4214835/D 11/2024

NOTES: (continued)

7. Laser cutting apertures with trapezoidal walls and rounded corners may offer better paste release. IPC-7525 may have alternate design recommendations.
8. Board assembly site may have different recommendations for stencil design.

DRY 6 USON - 0.6 mm max height

PLASTIC SMALL OUTLINE - NO LEAD



Images above are just a representation of the package family, actual package may vary.
Refer to the product data sheet for package details.

DRY0006A

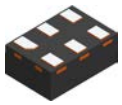

PACKAGE OUTLINE

USON - 0.6 mm max height

PLASTIC SMALL OUTLINE - NO LEAD

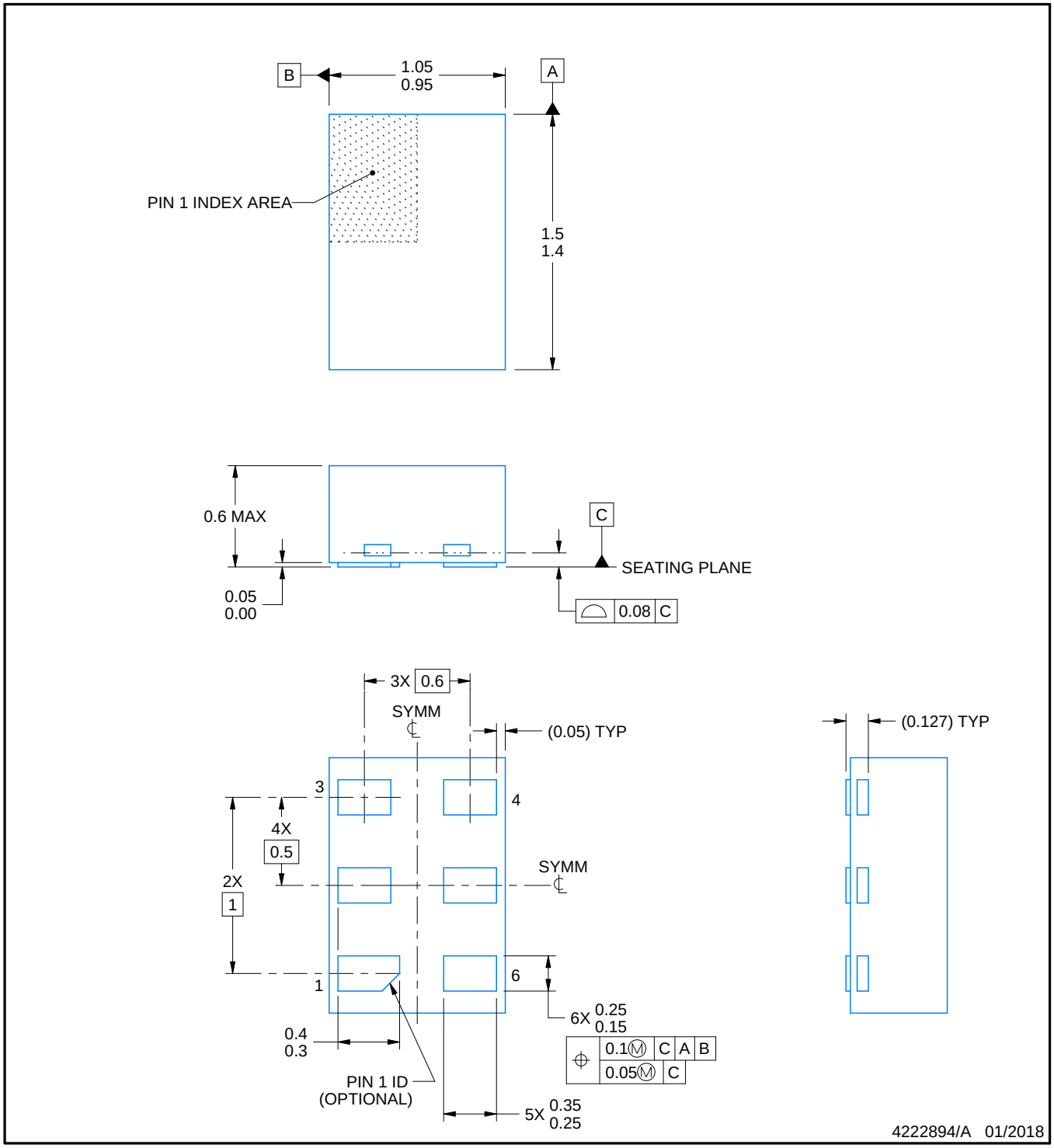

NOTES:

1. All linear dimensions are in millimeters. Any dimensions in parenthesis are for reference only. Dimensioning and tolerancing per ASME Y14.5M.
2. This drawing is subject to change without notice.

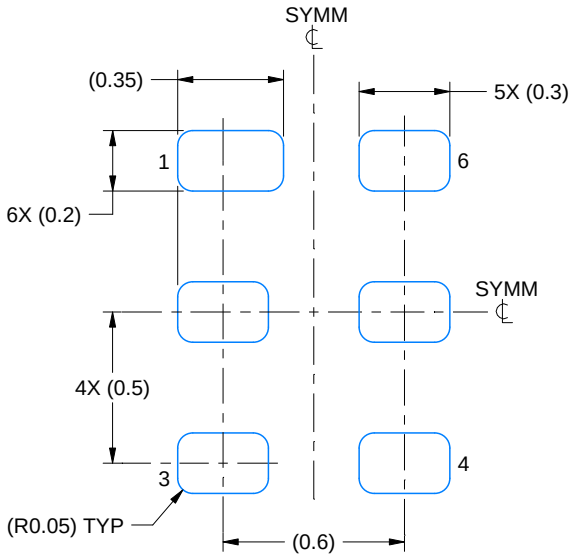

LAND PATTERN EXAMPLE
1:1 RATIO WITH PKG SOLDER PADS
EXPOSED METAL SHOWN
SCALE:40X

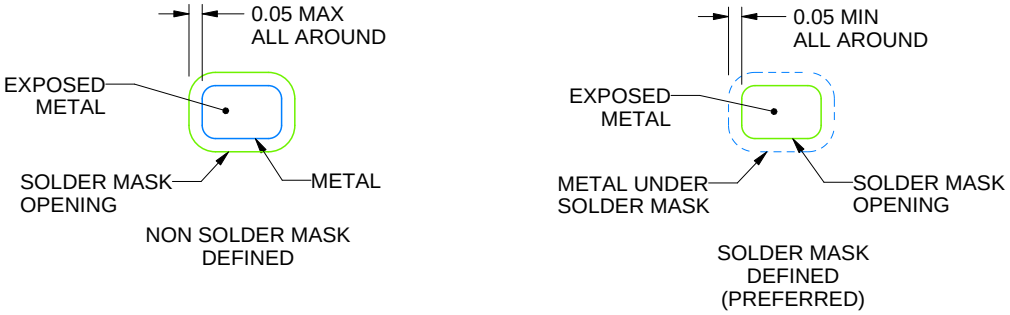

SOLDER MASK DETAILS

4222894/A 01/2018

NOTES: (continued)

3. For more information, see QFN/SON PCB application report in literature No. SLUA271 (www.ti.com/lit/slua271).

EXAMPLE STENCIL DESIGN

DRY0006A

USON - 0.6 mm max height

PLASTIC SMALL OUTLINE - NO LEAD

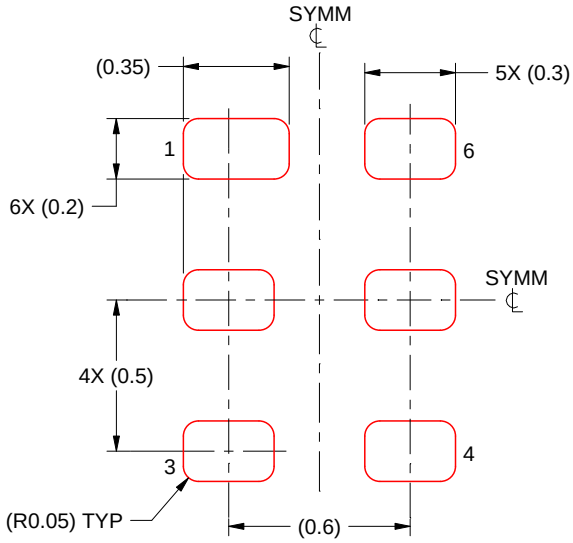

SOLDER PASTE EXAMPLE
BASED ON 0.075 - 0.1 mm THICK STENCIL
SCALE:40X

4222894/A 01/2018

NOTES: (continued)

4. Laser cutting apertures with trapezoidal walls and rounded corners may offer better paste release. IPC-7525 may have alternate design recommendations.

PACKAGE OUTLINE

DSF0006A

X2SON - 0.4 mm max height

PLASTIC SMALL OUTLINE - NO LEAD

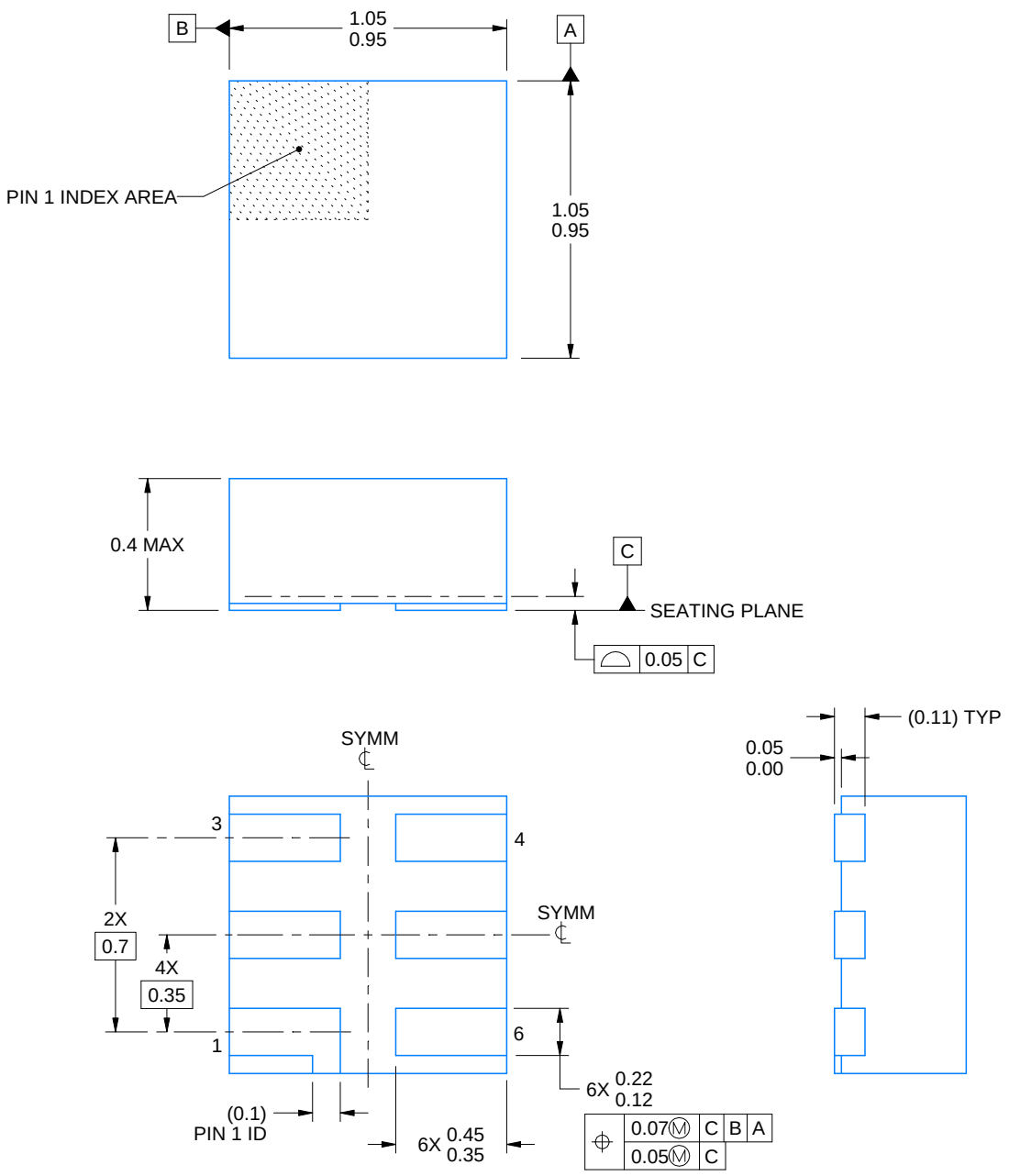

4220597/B 06/2022

NOTES:

1. All linear dimensions are in millimeters. Any dimensions in parenthesis are for reference only. Dimensioning and tolerancing per ASME Y14.5M.
2. This drawing is subject to change without notice.
3. Reference JEDEC registration MO-287, variation X2AAF.

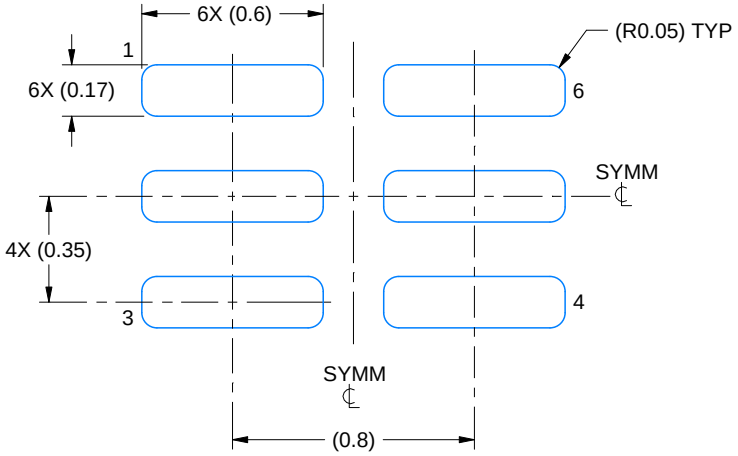

LAND PATTERN EXAMPLE
EXPOSED METAL SHOWN
SCALE:40X

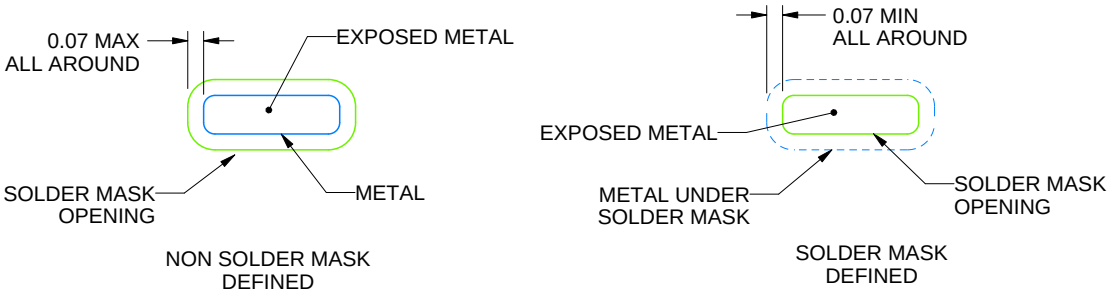

SOLDER MASK DETAILS

4220597/B 06/2022

NOTES: (continued)

4. For more information, see Texas Instruments literature number SLUA271 (www.ti.com/lit/slua271).

EXAMPLE STENCIL DESIGN

DSF0006A

X2SON - 0.4 mm max height

PLASTIC SMALL OUTLINE - NO LEAD

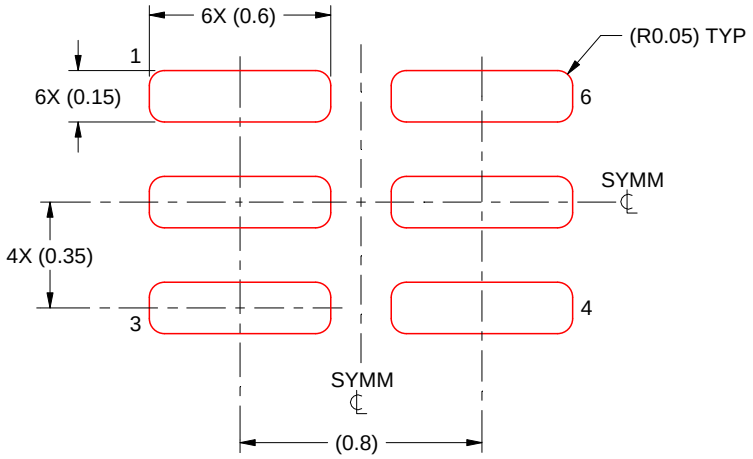

SOLDER PASTE EXAMPLE
BASED ON 0.09 mm THICK STENCIL

PRINTED SOLDER COVERAGE BY AREA UNDER PACKAGE
SCALE:40X

4220597/B 06/2022

4. Laser cutting apertures with trapezoidal walls and rounded corners may offer better paste release. IPC-7525 may have alternate design recommendations.

IMPORTANT NOTICE AND DISCLAIMER

TI PROVIDES TECHNICAL AND RELIABILITY DATA (INCLUDING DATASHEETS), DESIGN RESOURCES (INCLUDING REFERENCE DESIGNS), APPLICATION OR OTHER DESIGN ADVICE, WEB TOOLS, SAFETY INFORMATION, AND OTHER RESOURCES “AS IS” AND WITH ALL FAULTS, AND DISCLAIMS ALL WARRANTIES, EXPRESS AND IMPLIED, INCLUDING WITHOUT LIMITATION ANY IMPLIED WARRANTIES OF MERCHANTABILITY, FITNESS FOR A PARTICULAR PURPOSE OR NON-INFRINGEMENT OF THIRD PARTY INTELLECTUAL PROPERTY RIGHTS.

These resources are intended for skilled developers designing with TI products. You are solely responsible for (1) selecting the appropriate TI products for your application, (2) designing, validating and testing your application, and (3) ensuring your application meets applicable standards, and any other safety, security, regulatory or other requirements.

These resources are subject to change without notice. TI grants you permission to use these resources only for development of an application that uses the TI products described in the resource. Other reproduction and display of these resources is prohibited. No license is granted to any other TI intellectual property right or to any third party intellectual property right. TI disclaims responsibility for, and you fully indemnify TI and its representatives against any claims, damages, costs, losses, and liabilities arising out of your use of these resources.

TI’s products are provided subject to TI’s Terms of Sale, TI’s General Quality Guidelines, or other applicable terms available either on ti.com or provided in conjunction with such TI products. TI’s provision of these resources does not expand or otherwise alter TI’s applicable warranties or warranty disclaimers for TI products. Unless TI explicitly designates a product as custom or customer-specified, TI products are standard, catalog, general purpose devices.

TI objects to and rejects any additional or different terms you may propose.

Copyright © 2026, Texas Instruments Incorporated

Last updated 10/2025