SNx4HC251 具有三态输出的数据选择器/多路复用器

1 特性

- ’HC151 三态版本
- 2V 至 6V 的宽工作电压范围
- 高电流三态输出直接连接系统总线或驱动多达 15 个 LSTTL 负载
- 低功耗，I_{CC} 最大值为 80 μA
- t_{pd} 典型值 = 9ns
- 电压为 5V 时，输出驱动为 ±6mA
- 低输出电流，最大值 1μA
- 执行并行转串行转换
- 互补输出提供真反向数据

2 说明

SNx4HC251 是一款具有完整二进制解码功能的数据选择器/多路复用器，可从八个数据源中选择其中一个，并提供选通控制型互补三态输出。

器件信息

器件型号	封装(1)	封装尺寸（标称值）
SN74HC251D	SOIC (16)	9.90mm × 3.90mm
SN74HC251DB	SSOP (16)	6.20mm × 5.30mm
SN74HC251N	PDIP (16)	19.31mm × 6.35mm
SN74HC251NS	SO (16)	6.20mm × 5.30mm
SN74HC251PW	TSSOP (16)	5.00mm × 4.40mm
SN54HC251J	CDIP (16)	24.38mm × 6.92mm
SNJ54HC251FK	LCCC (20)	8.89mm × 8.45mm

(1) 如需了解所有可用封装，请参阅数据表末尾的可订购产品附录。

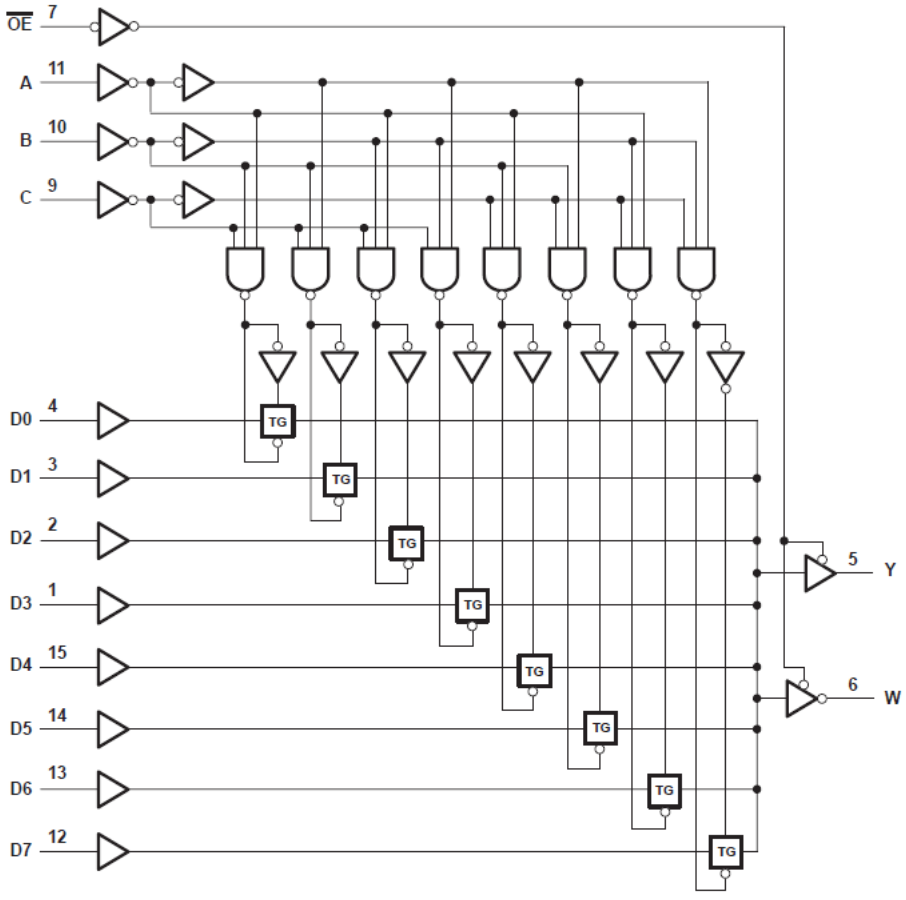

所示引脚编号用于 D、DB、J、N、NS、PW 和 W 封装。

功能方框图

本文档旨在为方便起见，提供有关 TI 产品中文版本的信息，以确认产品的概要。有关适用的官方英文版本的最新信息，请访问 www.ti.com，其内容始终优先。TI 不保证翻译的准确性和有效性。在实际设计之前，请务必参考最新版本的英文版本。

Table of Contents

1 特性 1
2 说明 1
3 Revision History 2
4 Pin Configuration and Functions 3
5 Specifications 4
5.1 Absolute Maximum Ratings 4
5.2 Recommended Operating Conditions(1) 4
5.3 Thermal Information 4
5.4 Electrical Characteristics 5
5.5 Switching Characteristics 5
5.6 Switching Characteristics 6
5.7 Operating Characteristics 6
6 Parameter Measurement Information 7
7 Detailed Description 8
7.1 Overview 8
7.2 Functional Block Diagram 8
7.3 Device Functional Modes 9
8 Power Supply Recommendations 10
9 Layout 10
9.1 Layout Guidelines 10
10 Device and Documentation Support 11
10.1 接收文档更新通知 11
10.2 支持资源 11
10.3 Trademarks 11
10.4 Electrostatic Discharge Caution 11
10.5 术语表 11
11 Mechanical, Packaging, and Orderable Information 11

3 Revision History

注：以前版本的页码可能与当前版本的页码不同

Changes from Revision E (September 2003) to Revision F (February 2022)	Page
• 更新了整个文档中的编号、格式、表格、图和交叉参考，以反映现代数据表标准	1

Copyright © 2022 Texas Instruments Incorporated

4 Pin Configuration and Functions

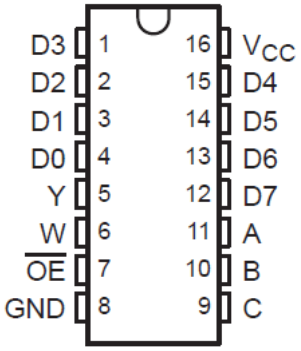

J, D, DB, N, NS, or PW Package
16-Pin CDIP, SOIC, SSOP, PDIP, SO, or TSSOP
Top View

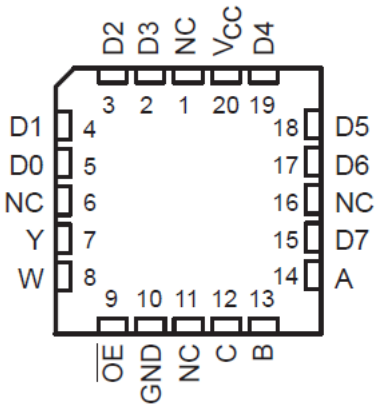

NC - No internal connection

FK Package
20-Pin LCCC
Top View

5 Specifications

5.1 Absolute Maximum Ratings

over operating free-air temperature range (unless otherwise noted)(1)

			MIN	MAX	UNIT
V_{CC}	Supply voltage range		–0.5	7	V
I_{IK}	Input clamp current(2)	$V_I < 0$ or $V_I > V_{CC}$		±20	mA
I_{OK}	Output clamp current(2)	$V_O < 0$ or $V_O > V_{CC}$		±20	mA
I_O	Continuous output current	$V_O = 0$ to V_{CC}		±35	mA
	Continuous current through V_{CC} or GND			±70	mA
T_J	Junction temperature			150	°C
T_{stg}	Storage temperature		–65	150	°C

(1) Stresses beyond those listed under *absolute maximum ratings* may cause permanent damage to the device. These are stress ratings only and functional operation of the device at these or any other conditions beyond those indicated under *recommended operating conditions* is not implied. Exposure to absolute-maximum-rated conditions for extended periods may affect device reliability.
(2) The input and output voltage ratings may be exceeded if the input and output current ratings are observed.

5.2 Recommended Operating Conditions(1)

			SN54HC251			SN74HC251			UNIT
			MIN	NOM	MAX	MIN	NOM	MAX	
V_{CC}	Supply voltage		2	5	6	2	5	6	V
V_{IH}	High-level input voltage	V_{CC} = 2 V	1.5			1.5			V
		V_{CC} = 4.5 V	3.15			3.15			
		V_{CC} = 6 V	4.2			4.2			
V_{IL}	Low-level input voltage	V_{CC} = 2 V			0.5			0.5	V
		V_{CC} = 4.5 V			1.35			1.35	
		V_{CC} = 6 V			1.8			1.8	
V_I	Input voltage		0		V_{CC}	0		V_{CC}	V
V_O	Output voltage		0		V_{CC}	0		V_{CC}	V
$\Delta t/\Delta v$	Input transition rise/fall time	V_{CC} = 2 V			1000			1000	ns
		V_{CC} = 4.5 V			500			500	
		V_{CC} = 6 V			400			400	
T_A	Operating free-air temperature		–55		125	–40		85	°C

(1) All unused inputs of the device must be held at V_{CC} or GND to ensure proper device operation. Refer to the TI application report, *Implications of Slow or Floating CMOS Inputs*, literature number SCBA004.

5.3 Thermal Information

THERMAL METRIC(1)		D (SOIC) 16 PINS	DB (SSOP) 16 PINS	N (PDIP) 16 PINS	NS (SO) 16 PINS	PW (TSSOP) 16 PINS	UNIT
$R_{\theta JA}$	Junction-to-ambient thermal resistance	73	82	67	64	108	°C/W

(1) For more information about traditional and new thermal metrics, see the *Semiconductor and IC package thermal metrics* application report.

Copyright © 2022 Texas Instruments Incorporated

5.4 Electrical Characteristics

over recommended operating free-air temperature range (unless otherwise noted)

PARAMETER	TEST CONDITIONS[1]	V_{CC} (V)	T_A = 25°C			SN54HC251		SN74HC251		UNIT
			MIN	TYP	MAX	MIN	MAX	MIN	MAX	
V_{OH}	I_{OH} = −20 μA	2	1.9	1.998		1.9		1.9		V
		4.5	4.4	4.499		4.4		4.4		
		6	5.9	5.999		5.9		5.9		
	I_{OH} = −6 mA	4.5	3.98	4.3		3.7		3.84		
	I_{OH} = −7.8 mA	6	5.48	5.8		5.2		5.34		
V_{OL}	I_{OL} = 20 μA	2		0.002	0.1		0.1		0.1	V
		4.5		0.001	0.1		0.1		0.1	
		6		0.001	0.1		0.1		0.1	
	I_{OL} = 6 mA	4.5		0.17	0.26		0.4		0.33	
	I_{OL} = 7.8 mA	6		0.15	0.26		0.4		0.33	
I_I	V_I = V_{CC} or 0	6		±0.1	±100		±1000		±1000	nA
I_{OZ}	V_o = V_{CC} or 0	6		±0.01	±0.5		±10		±5	μA
I_{CC}	V_I = V_{CC} or 0, I_O = 0	6			8		160		80	μA
C_i		2 to 6		3	10		10		10	pF

(1) V_I = V_{IH} or V_{IL}, unless otherwise noted.

5.5 Switching Characteristics

over recommended operating free-air temperature range, C_L = 50 pF (unless otherwise noted) (see 图 6-1)

PARAMETER	FROM (INPUT)	TO (OUTPUT)	V_{CC} (V)	T_A = 25°C			SN54HC251		SN74HC251		UNIT
				MIN	TYP	MAX	MIN	MAX	MIN	MAX	
t_{pd}	A, B, or C	W or Y	2		58	205		300		256	ns
			4.5		21	41		60		51	
			6		19	35		51		44	
	Any D	W or Y	2		44	195		283		244	
			4.5		17	39		57		49	
			6		15	33		48		41	
t_{en}	$\overline{OE}$	W or Y	2		30	145		210		181	ns
			4.5		10	29		42		36	
			6		9	25		36		31	
t_{dis}	$\overline{OE}$	W or Y	2		25	195		283		244	ns
			4.5		15	39		57		49	
			6		14	33		48		41	
t_t		W or Y	2		20	75		110		95	ns
			4.5		8	15		22		19	
			6		6	13		19		16	

Copyright © 2022 Texas Instruments Incorporated

5.6 Switching Characteristics

over recommended operating free-air temperature range, C_L = 150 pF (unless otherwise noted) (see 图 6-1)

PARAMETER	FROM (INPUT)	TO (OUTPUT)	V_{CC} (V)	T_A = 25°C			SN54HC251		SN74HC251		UNIT
				MIN	TYP	MAX	MIN	MAX	MIN	MAX	
t_{pd}	A, B, or C	W or Y	2		72	300		450		375	ns
			4.5		25	60		90		75	
			6		22	52		77		65	
	Any D	W or Y	2		59	300		450		375	
			4.5		21	60		90		75	
			6		18	52		77		65	
t_{en}	$\overline{OE}$	W or Y	2		50	230		340		285	ns
			4.5		17	46		68		57	
			6		15	40		58		50	
t_t		W or Y	2		45	210		315		265	ns
			4.5		17	42		63		53	
			6		13	36		53		45	

5.7 Operating Characteristics

T_A = 25℃

PARAMETER		TEST CONDITIONS	TYP	UNIT
C_{pd}	Power dissipation capacitance	No load	70	pF

Copyright © 2022 Texas Instruments Incorporated

6 Parameter Measurement Information

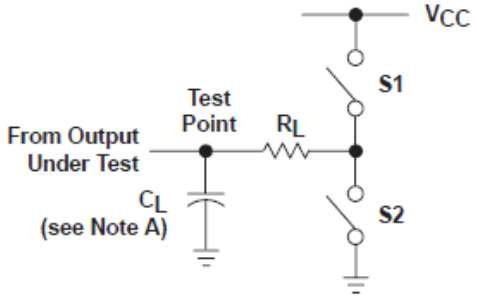

LOAD CIRCUIT

PARAMETER		R_L	C_L	S1	S2
t_{en}	t_{PZH}	1 kΩ	50 pF or 150 pF	Open	Closed
	t_{PZL}			Closed	Open
t_{dis}	t_{PHZ}	1 kΩ	50 pF	Open	Closed
	t_{PLZ}			Closed	Open
t_{pd} or t_t		—	50 pF or 150 pF	Open	Open

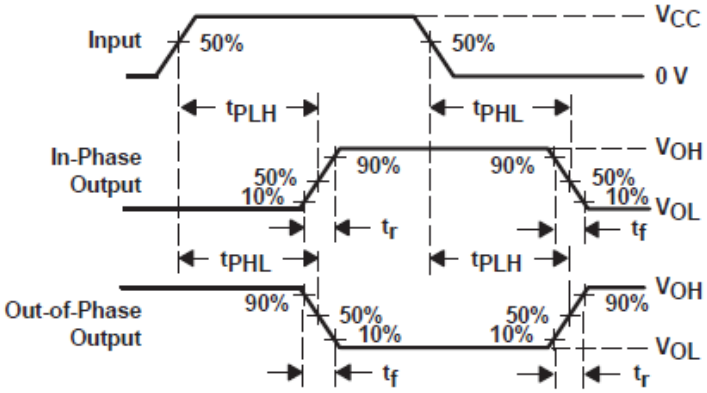

VOLTAGE WAVEFORMS
PROPAGATION DELAY AND OUTPUT TRANSITION TIMES

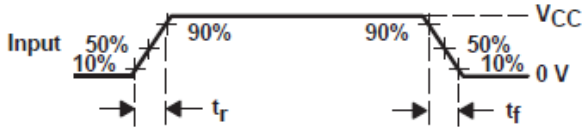

VOLTAGE WAVEFORM
INPUT RISE AND FALL TIMES

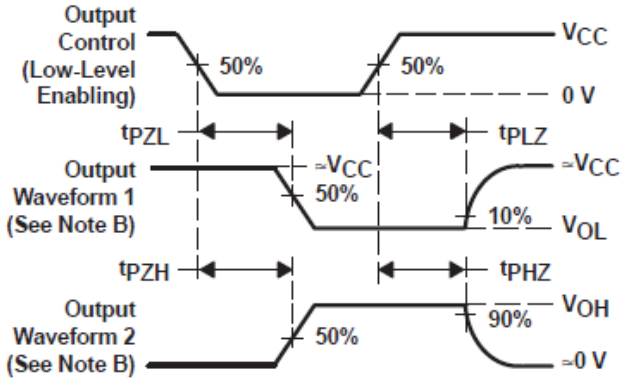

VOLTAGE WAVEFORMS
ENABLE AND DISABLE TIMES FOR 3-STATE OUTPUTS

NOTES: A. C_L includes probe and test-fixture capacitance.
B. Waveform 1 is for an output with internal conditions such that the output is low except when disabled by the output control. Waveform 2 is for an output with internal conditions such that the output is high except when disabled by the output control.
C. Phase relationships between waveforms were chosen arbitrarily. All input pulses are supplied by generators having the following characteristics: PRR ≤ 1 MHz, Z_O = 50 Ω, t_r = 6 ns, t_f = 6 ns.
D. The outputs are measured one at a time with one input transition per measurement.
E. t_{PLZ} and t_{PHZ} are the same as t_{dis}.
F. t_{PZL} and t_{PZH} are the same as t_{en}.
G. t_{PLH} and t_{PHL} are the same as t_{pd}.

图 6-1. Load Circuit and Voltage Waveforms

Copyright © 2022 Texas Instruments Incorporated

7 Detailed Description

7.1 Overview

These data selectors/multiplexers contain full binary decoding to select 1-of-8 data sources and feature strobe-controlled complementary 3-state outputs.

The 3-state outputs can interface with and drive data lines of bus-organized systems. With all but one of the common outputs disabled (in the high-impedance state), the low impedance of the single enabled output drives the bus line to a high or low logic level. Both outputs are controlled by the output-enable ($\overline{OE}$) input. The outputs are disabled when $\overline{OE}$ is high.

7.2 Functional Block Diagram

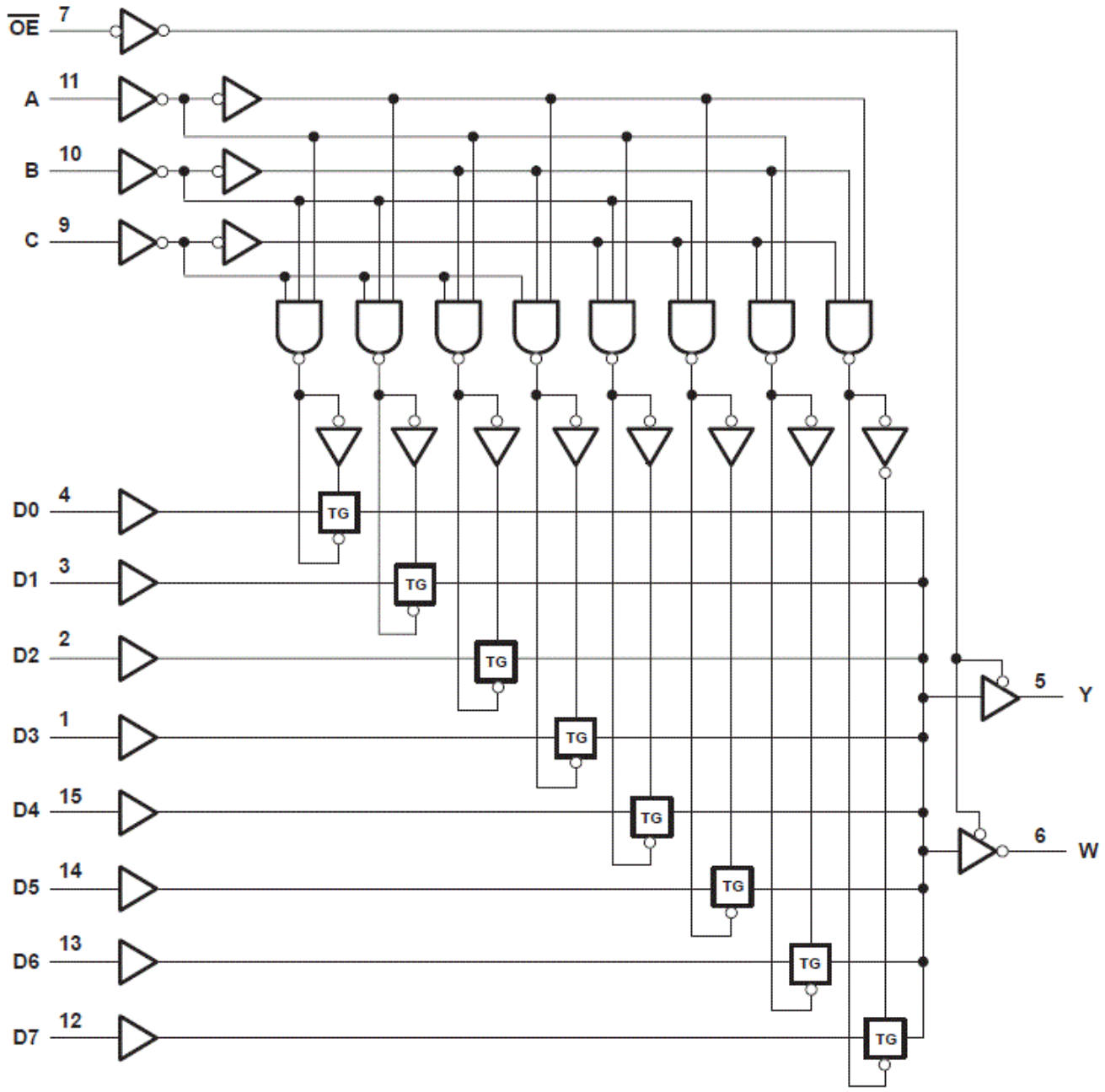

Pin numbers shown are for the D, DB, J, N, NS, PW, and W packages.

Copyright © 2022 Texas Instruments Incorporated

7.3 Device Functional Modes

表 7-1. Function Table(1)

INPUTS				OUTPUTS	
SELECT			$\overline{OE}$	Y	W
C	B	A			
X	X	X	H	Z	Z
L	L	L	L	D0	$\overline{D0}$
L	L	H	L	D1	$\overline{D1}$
L	H	L	L	D2	$\overline{D2}$
L	H	H	L	D3	$\overline{D3}$
H	L	L	L	D4	$\overline{D4}$
H	L	H	L	D5	$\overline{D5}$
H	H	L	L	D6	$\overline{D6}$
H	H	H	L	D7	$\overline{D7}$

(1) D0, D1 . . . D7 = the level of the respective D input.

Copyright © 2022 Texas Instruments Incorporated

8 Power Supply Recommendations

The power supply can be any voltage between the minimum and maximum supply voltage rating located in the *Recommended Operating Conditions*. Each V_{CC} terminal should have a good bypass capacitor to prevent power disturbance. A 0.1-μF capacitor is recommended for this device. It is acceptable to parallel multiple bypass caps to reject different frequencies of noise. The 0.1-μF and 1-μF capacitors are commonly used in parallel. The bypass capacitor should be installed as close to the power terminal as possible for best results.

9 Layout

9.1 Layout Guidelines

When using multiple-input and multiple-channel logic devices inputs must not ever be left floating. In many cases, functions or parts of functions of digital logic devices are unused; for example, when only two inputs of a triple-input AND gate are used or only 3 of the 4 buffer gates are used. Such unused input pins must not be left unconnected because the undefined voltages at the outside connections result in undefined operational states. All unused inputs of digital logic devices must be connected to a logic high or logic low voltage, as defined by the input voltage specifications, to prevent them from floating. The logic level that must be applied to any particular unused input depends on the function of the device. Generally, the inputs are tied to GND or V_{CC}, whichever makes more sense for the logic function or is more convenient.

Copyright © 2022 Texas Instruments Incorporated

10 Device and Documentation Support

TI offers an extensive line of development tools. Tools and software to evaluate the performance of the device, generate code, and develop solutions are listed below.

10.1 接收文档更新通知

要接收文档更新通知，请导航至 ti.com 上的器件产品文件夹。点击 *订阅更新* 进行注册，即可每周接收产品信息更改摘要。有关更改的详细信息，请查看任何已修订文档中包含的修订历史记录。

10.2 支持资源

TI E2E™ 支持论坛是工程师的重要参考资料，可直接从专家获得快速、经过验证的解答和设计帮助。搜索现有解答或提出自己的问题可获得所需的快速设计帮助。

链接的内容由各个贡献者“按原样”提供。这些内容并不构成 TI 技术规范，并且不一定反映 TI 的观点；请参阅 TI 的《使用条款》。

10.3 Trademarks

TI E2E™ is a trademark of Texas Instruments.
所有商标均为其各自所有者的财产。

10.4 Electrostatic Discharge Caution



This integrated circuit can be damaged by ESD. Texas Instruments recommends that all integrated circuits be handled with appropriate precautions. Failure to observe proper handling and installation procedures can cause damage.

ESD damage can range from subtle performance degradation to complete device failure. Precision integrated circuits may be more susceptible to damage because very small parametric changes could cause the device not to meet its published specifications.

10.5 术语表

TI 术语表　　本术语表列出并解释了术语、首字母缩略词和定义。

11 Mechanical, Packaging, and Orderable Information

The following pages include mechanical, packaging, and orderable information. This information is the most current data available for the designated devices. This data is subject to change without notice and revision of this document. For browser-based versions of this data sheet, refer to the left-hand navigation.

Copyright © 2022 Texas Instruments Incorporated

重要声明和免责声明

TI 提供技术和可靠性数据（包括数据表）、设计资源（包括参考设计）、应用或其他设计建议、网络工具、安全信息和其他资源，不保证没有瑕疵且不做出任何明示或暗示的担保，包括但不限于对适销性、某特定用途方面的适用性或不侵犯任何第三方知识产权的暗示担保。

这些资源可供使用 TI 产品进行设计的熟练开发人员使用。您将自行承担以下全部责任：(1) 针对您的应用选择合适的 TI 产品，(2) 设计、验证并测试您的应用，(3) 确保您的应用满足相应标准以及任何其他安全、安保或其他要求。这些资源如有变更，恕不另行通知。TI 授权您仅可将这些资源用于研发本资源所述的 TI 产品的应用。严禁对这些资源进行其他复制或展示。您无权使用任何其他 TI 知识产权或任何第三方知识产权。您应全额赔偿因在这些资源的使用中对 TI 及其代表造成的任何索赔、损害、成本、损失和债务，TI 对此概不负责。

TI 提供的产品受 TI 的销售条款 (https:www.ti.com/legal/termsofsale.html) 或 ti.com 上其他适用条款/TI 产品随附的其他适用条款的约束。TI 提供这些资源并不会扩展或以其他方式更改 TI 针对 TI 产品发布的适用的担保或担保免责声明。

邮寄地址：Texas Instruments, Post Office Box 655303, Dallas, Texas 75265
Copyright © 2021，德州仪器 (TI) 公司

PACKAGING INFORMATION

Orderable part number	Status (1)	Material type (2)	Package | Pins	Package qty | Carrier	RoHS (3)	Lead finish/ Ball material (4)	MSL rating/ Peak reflow (5)	Op temp (°C)	Part marking (6)
85125012A	Active	Production	LCCC (FK) | 20	55 | TUBE	No	SNPB	N/A for Pkg Type	-55 to 125	85125012A SNJ54HC 251FK
8512501EA	Active	Production	CDIP (J) | 16	25 | TUBE	No	SNPB	N/A for Pkg Type	-55 to 125	8512501EA SNJ54HC251J
SN54HC251J	Active	Production	CDIP (J) | 16	25 | TUBE	No	SNPB	N/A for Pkg Type	-55 to 125	SN54HC251J
SN54HC251J.A	Active	Production	CDIP (J) | 16	25 | TUBE	No	SNPB	N/A for Pkg Type	-55 to 125	SN54HC251J
SN74HC251D	Obsolete	Production	SOIC (D) | 16	-	-	Call TI	Call TI	-40 to 85	HC251
SN74HC251DBR	Active	Production	SSOP (DB) | 16	2000 | LARGE T&R	Yes	NIPDAU	Level-1-260C-UNLIM	-40 to 85	HC251
SN74HC251DBR.A	Active	Production	SSOP (DB) | 16	2000 | LARGE T&R	Yes	NIPDAU	Level-1-260C-UNLIM	-40 to 85	HC251
SN74HC251DR	Active	Production	SOIC (D) | 16	2500 | LARGE T&R	Yes	NIPDAU | SN	Level-1-260C-UNLIM	-40 to 85	HC251
SN74HC251DR.A	Active	Production	SOIC (D) | 16	2500 | LARGE T&R	Yes	NIPDAU	Level-1-260C-UNLIM	-40 to 85	HC251
SN74HC251DRG4	Active	Production	SOIC (D) | 16	2500 | LARGE T&R	Yes	NIPDAU	Level-1-260C-UNLIM	-40 to 85	HC251
SN74HC251DRG4.A	Active	Production	SOIC (D) | 16	2500 | LARGE T&R	Yes	NIPDAU	Level-1-260C-UNLIM	-40 to 85	HC251
SN74HC251DT	Obsolete	Production	SOIC (D) | 16	-	-	Call TI	Call TI	-40 to 85	HC251
SN74HC251N	Active	Production	PDIP (N) | 16	25 | TUBE	Yes	NIPDAU	N/A for Pkg Type	-40 to 85	SN74HC251N
SN74HC251N.A	Active	Production	PDIP (N) | 16	25 | TUBE	Yes	NIPDAU	N/A for Pkg Type	-40 to 85	SN74HC251N
SN74HC251NSR	Active	Production	SOP (NS) | 16	2000 | LARGE T&R	Yes	NIPDAU	Level-1-260C-UNLIM	-40 to 85	HC251
SN74HC251NSR.A	Active	Production	SOP (NS) | 16	2000 | LARGE T&R	Yes	NIPDAU	Level-1-260C-UNLIM	-40 to 85	HC251
SN74HC251PW	Obsolete	Production	TSSOP (PW) | 16	-	-	Call TI	Call TI	-40 to 85	HC251
SN74HC251PWR	Active	Production	TSSOP (PW) | 16	2000 | LARGE T&R	Yes	NIPDAU | SN	Level-1-260C-UNLIM	-40 to 85	HC251
SN74HC251PWR.A	Active	Production	TSSOP (PW) | 16	2000 | LARGE T&R	Yes	NIPDAU	Level-1-260C-UNLIM	-40 to 85	HC251
SN74HC251PWR1G4	Active	Production	TSSOP (PW) | 16	2000 | LARGE T&R	Yes	NIPDAU	Level-1-260C-UNLIM	-40 to 85	HC251
SN74HC251PWT	Obsolete	Production	TSSOP (PW) | 16	-	-	Call TI	Call TI	-40 to 85	HC251
SNJ54HC251FK	Active	Production	LCCC (FK) | 20	55 | TUBE	No	SNPB	N/A for Pkg Type	-55 to 125	85125012A SNJ54HC 251FK
SNJ54HC251FK.A	Active	Production	LCCC (FK) | 20	55 | TUBE	No	SNPB	N/A for Pkg Type	-55 to 125	85125012A SNJ54HC 251FK

Orderable part number	Status (1)	Material type (2)	Package | Pins	Package qty | Carrier	RoHS (3)	Lead finish/ Ball material (4)	MSL rating/ Peak reflow (5)	Op temp (°C)	Part marking (6)
SNJ54HC251J	Active	Production	CDIP (J) | 16	25 | TUBE	No	SNPB	N/A for Pkg Type	-55 to 125	8512501EA SNJ54HC251J
SNJ54HC251J.A	Active	Production	CDIP (J) | 16	25 | TUBE	No	SNPB	N/A for Pkg Type	-55 to 125	8512501EA SNJ54HC251J

(1) **Status:** For more details on status, see our product life cycle.

(2) **Material type:** When designated, preproduction parts are prototypes/experimental devices, and are not yet approved or released for full production. Testing and final process, including without limitation quality assurance, reliability performance testing, and/or process qualification, may not yet be complete, and this item is subject to further changes or possible discontinuation. If available for ordering, purchases will be subject to an additional waiver at checkout, and are intended for early internal evaluation purposes only. These items are sold without warranties of any kind.

(3) **RoHS values:** Yes, No, RoHS Exempt. See the TI RoHS Statement for additional information and value definition.

(4) **Lead finish/Ball material:** Parts may have multiple material finish options. Finish options are separated by a vertical ruled line. Lead finish/Ball material values may wrap to two lines if the finish value exceeds the maximum column width.

(5) **MSL rating/Peak reflow:** The moisture sensitivity level ratings and peak solder (reflow) temperatures. In the event that a part has multiple moisture sensitivity ratings, only the lowest level per JEDEC standards is shown. Refer to the shipping label for the actual reflow temperature that will be used to mount the part to the printed circuit board.

(6) **Part marking:** There may be an additional marking, which relates to the logo, the lot trace code information, or the environmental category of the part.

Multiple part markings will be inside parentheses. Only one part marking contained in parentheses and separated by a "~" will appear on a part. If a line is indented then it is a continuation of the previous line and the two combined represent the entire part marking for that device.

Important Information and Disclaimer: The information provided on this page represents TI's knowledge and belief as of the date that it is provided. TI bases its knowledge and belief on information provided by third parties, and makes no representation or warranty as to the accuracy of such information. Efforts are underway to better integrate information from third parties. TI has taken and continues to take reasonable steps to provide representative and accurate information but may not have conducted destructive testing or chemical analysis on incoming materials and chemicals. TI and TI suppliers consider certain information to be proprietary, and thus CAS numbers and other limited information may not be available for release.

In no event shall TI's liability arising out of such information exceed the total purchase price of the TI part(s) at issue in this document sold by TI to Customer on an annual basis.

OTHER QUALIFIED VERSIONS OF SN54HC251, SN74HC251 :

- Catalog : SN74HC251

- Military : SN54HC251

NOTE: Qualified Version Definitions:

- Catalog - TI's standard catalog product
- Military - QML certified for Military and Defense Applications

TAPE AND REEL INFORMATION

REEL DIMENSIONS

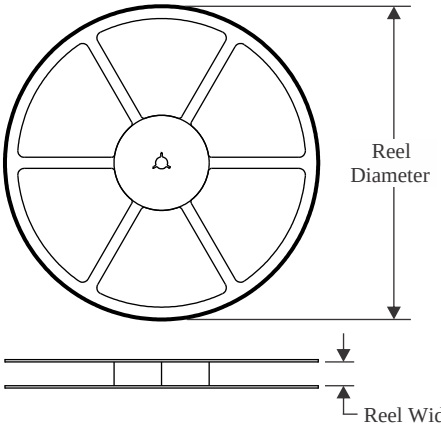

TAPE DIMENSIONS

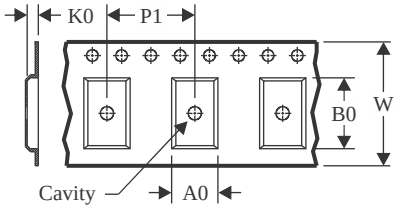

A0	Dimension designed to accommodate the component width
B0	Dimension designed to accommodate the component length
K0	Dimension designed to accommodate the component thickness
W	Overall width of the carrier tape
P1	Pitch between successive cavity centers

QUADRANT ASSIGNMENTS FOR PIN 1 ORIENTATION IN TAPE

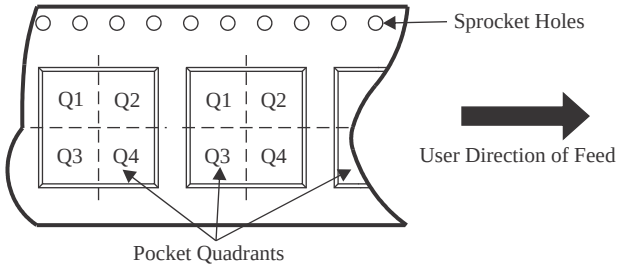

*All dimensions are nominal

Device	Package Type	Package Drawing	Pins	SPQ	Reel Diameter (mm)	Reel Width W1 (mm)	A0 (mm)	B0 (mm)	K0 (mm)	P1 (mm)	W (mm)	Pin1 Quadrant
SN74HC251DBR	SSOP	DB	16	2000	330.0	16.4	8.35	6.6	2.4	12.0	16.0	Q1
SN74HC251DR	SOIC	D	16	2500	330.0	16.4	6.5	10.3	2.1	8.0	16.0	Q1
SN74HC251DRG4	SOIC	D	16	2500	330.0	16.4	6.5	10.3	2.1	8.0	16.0	Q1
SN74HC251NSR	SOP	NS	16	2000	330.0	16.4	8.1	10.4	2.5	12.0	16.0	Q1
SN74HC251NSR	SOP	NS	16	2000	330.0	16.4	8.45	10.55	2.5	12.0	16.2	Q1
SN74HC251PWR	TSSOP	PW	16	2000	330.0	12.4	6.9	5.6	1.6	8.0	12.0	Q1
SN74HC251PWR	TSSOP	PW	16	2000	330.0	12.4	6.9	5.6	1.6	8.0	12.0	Q1
SN74HC251PWR1G4	TSSOP	PW	16	2000	330.0	12.4	6.9	5.6	1.6	8.0	12.0	Q1

TAPE AND REEL BOX DIMENSIONS

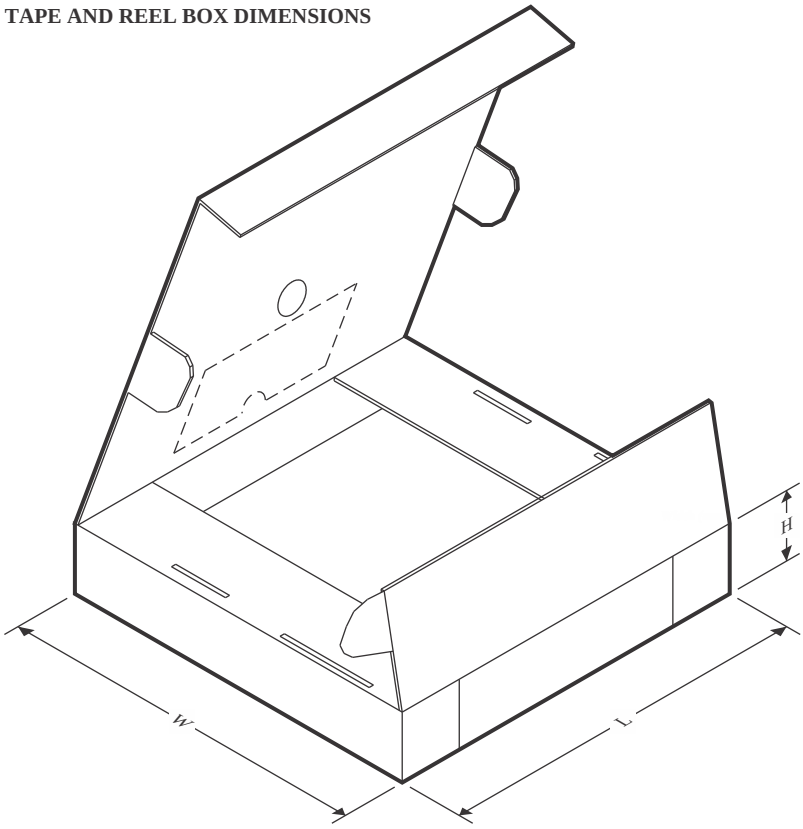

*All dimensions are nominal

Device	Package Type	Package Drawing	Pins	SPQ	Length (mm)	Width (mm)	Height (mm)
SN74HC251DBR	SSOP	DB	16	2000	353.0	353.0	32.0
SN74HC251DR	SOIC	D	16	2500	353.0	353.0	32.0
SN74HC251DRG4	SOIC	D	16	2500	353.0	353.0	32.0
SN74HC251NSR	SOP	NS	16	2000	353.0	353.0	32.0
SN74HC251NSR	SOP	NS	16	2000	353.0	353.0	32.0
SN74HC251PWR	TSSOP	PW	16	2000	353.0	353.0	32.0
SN74HC251PWR	TSSOP	PW	16	2000	356.0	356.0	35.0
SN74HC251PWR1G4	TSSOP	PW	16	2000	356.0	356.0	35.0

TUBE

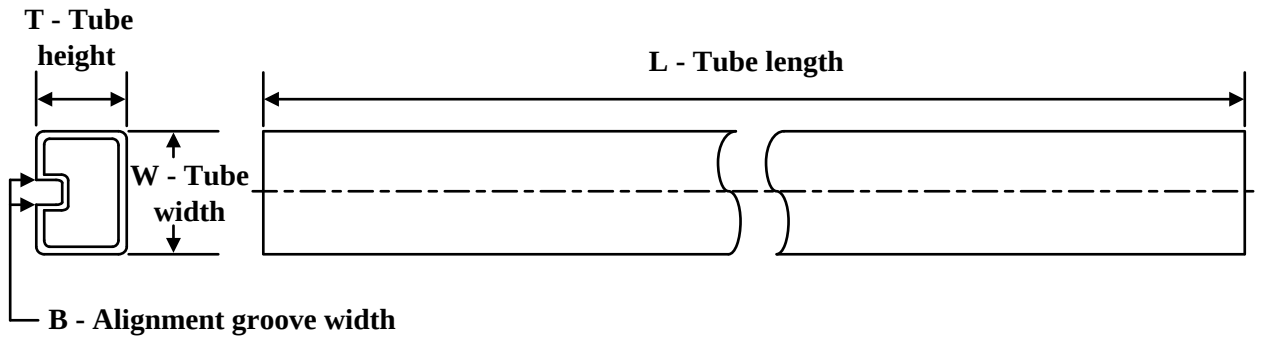

*All dimensions are nominal

Device	Package Name	Package Type	Pins	SPQ	L (mm)	W (mm)	T (µm)	B (mm)
85125012A	FK	LCCC	20	55	506.98	12.06	2030	NA
SN74HC251N	N	PDIP	16	25	506	13.97	11230	4.32
SN74HC251N	N	PDIP	16	25	506	13.97	11230	4.32
SN74HC251N.A	N	PDIP	16	25	506	13.97	11230	4.32
SN74HC251N.A	N	PDIP	16	25	506	13.97	11230	4.32
SNJ54HC251FK	FK	LCCC	20	55	506.98	12.06	2030	NA
SNJ54HC251FK.A	FK	LCCC	20	55	506.98	12.06	2030	NA

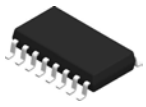

PACKAGE OUTLINE

NS0016A

SOP - 2.00 mm max height

SOP

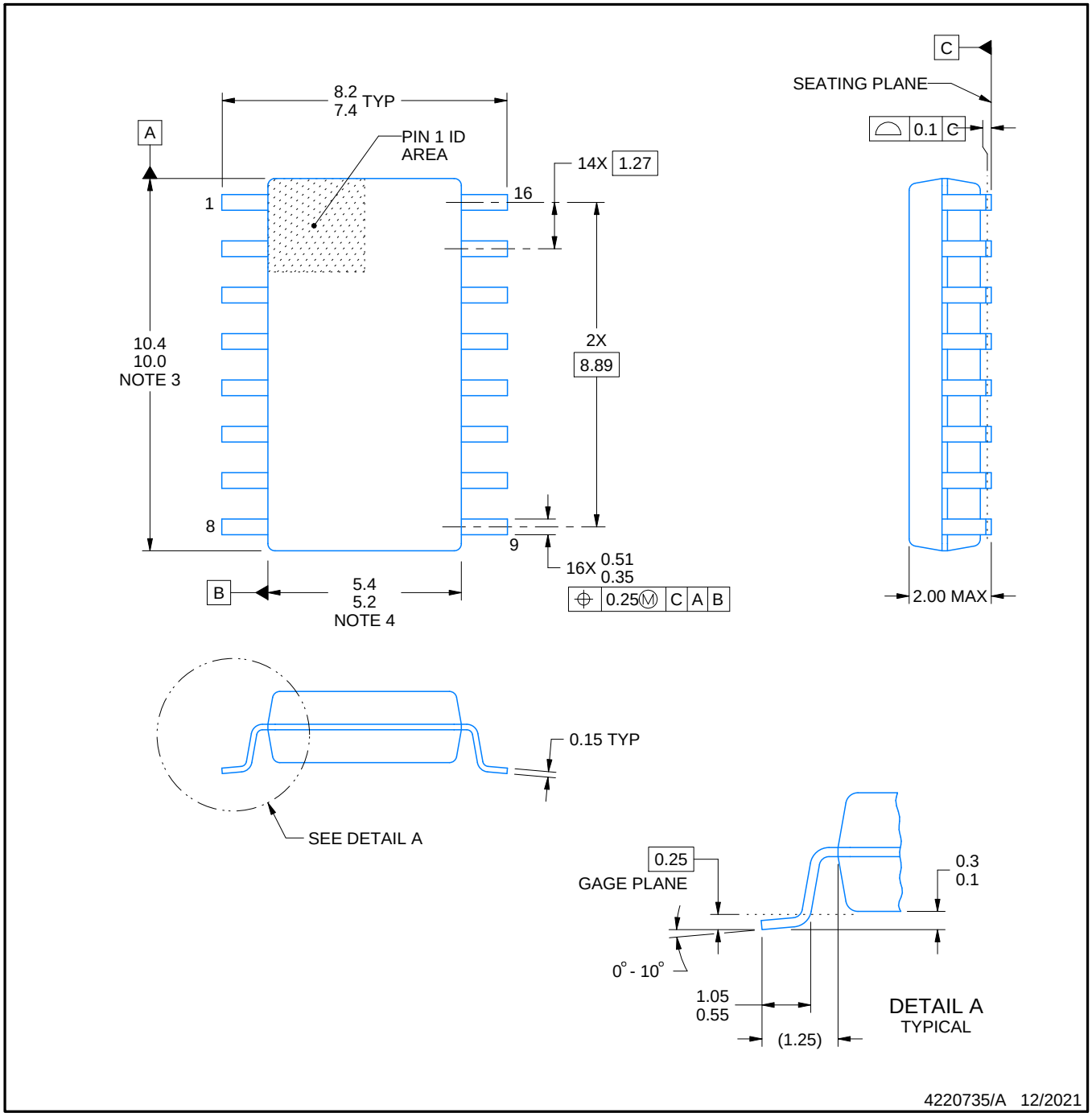

NOTES:

1. All linear dimensions are in millimeters. Dimensions in parenthesis are for reference only. Dimensioning and tolerancing per ASME Y14.5M.
2. This drawing is subject to change without notice.
3. This dimension does not include mold flash, protrusions, or gate burrs. Mold flash, protrusions, or gate burrs shall not exceed 0.15 mm, per side.
4. This dimension does not include interlead flash. Interlead flash shall not exceed 0.25 mm, per side.

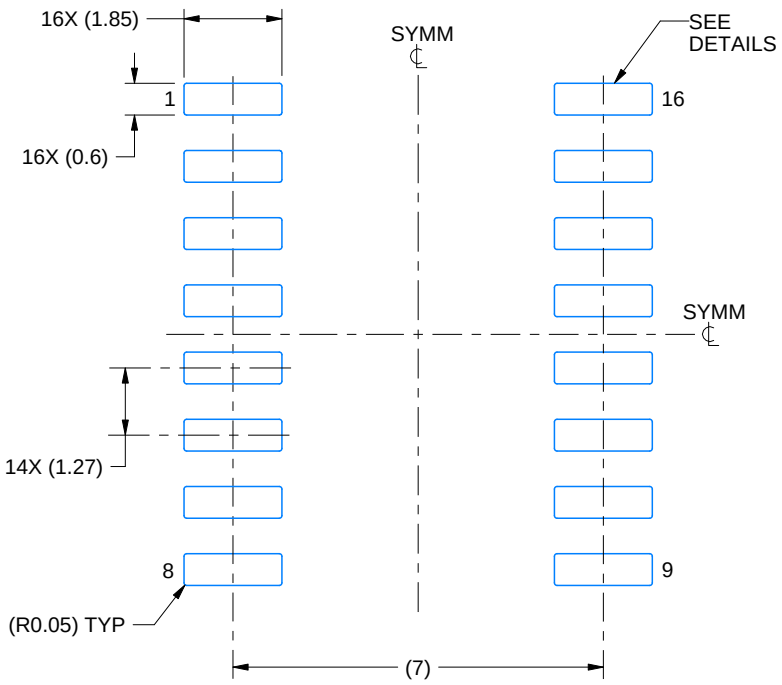

LAND PATTERN EXAMPLE
SCALE:7X

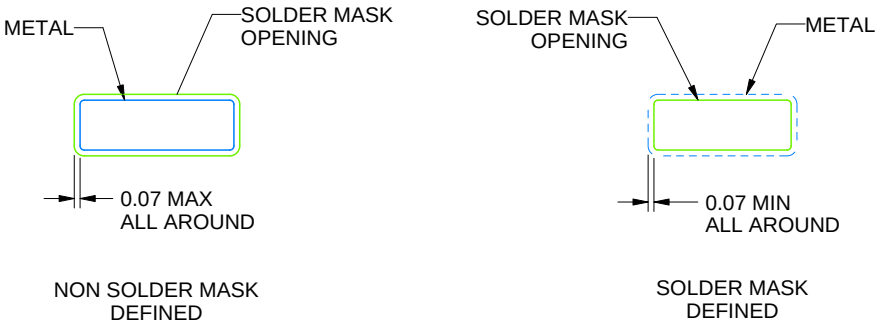

NON SOLDER MASK
DEFINED

SOLDER MASK
DEFINED

SOLDER MASK DETAILS

4220735/A 12/2021

NOTES: (continued)

5. Publication IPC-7351 may have alternate designs.
6. Solder mask tolerances between and around signal pads can vary based on board fabrication site.

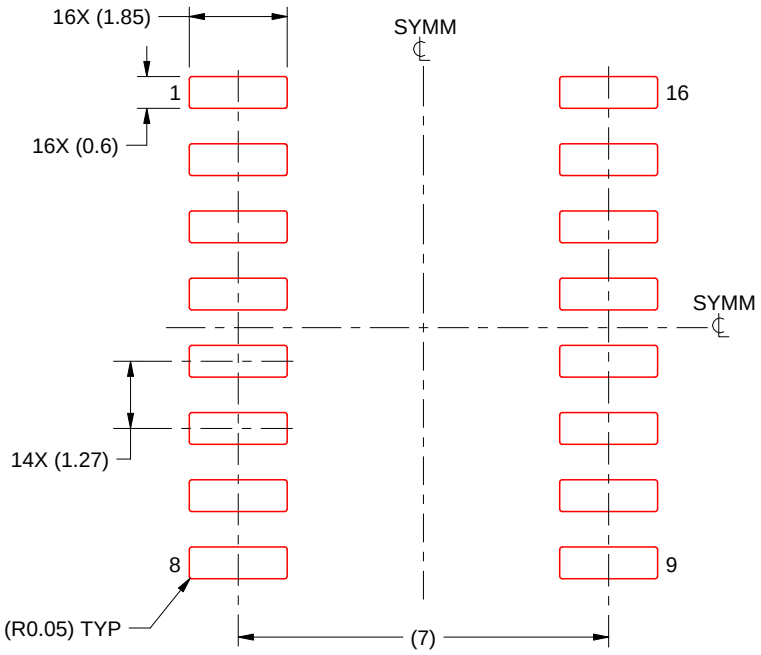

SOLDER PASTE EXAMPLE
BASED ON 0.125 mm THICK STENCIL
SCALE:7X

4220735/A 12/2021

NOTES: (continued)

7. Laser cutting apertures with trapezoidal walls and rounded corners may offer better paste release. IPC-7525 may have alternate design recommendations.
8. Board assembly site may have different recommendations for stencil design.

D (R–PDSO–G16) PLASTIC SMALL OUTLINE

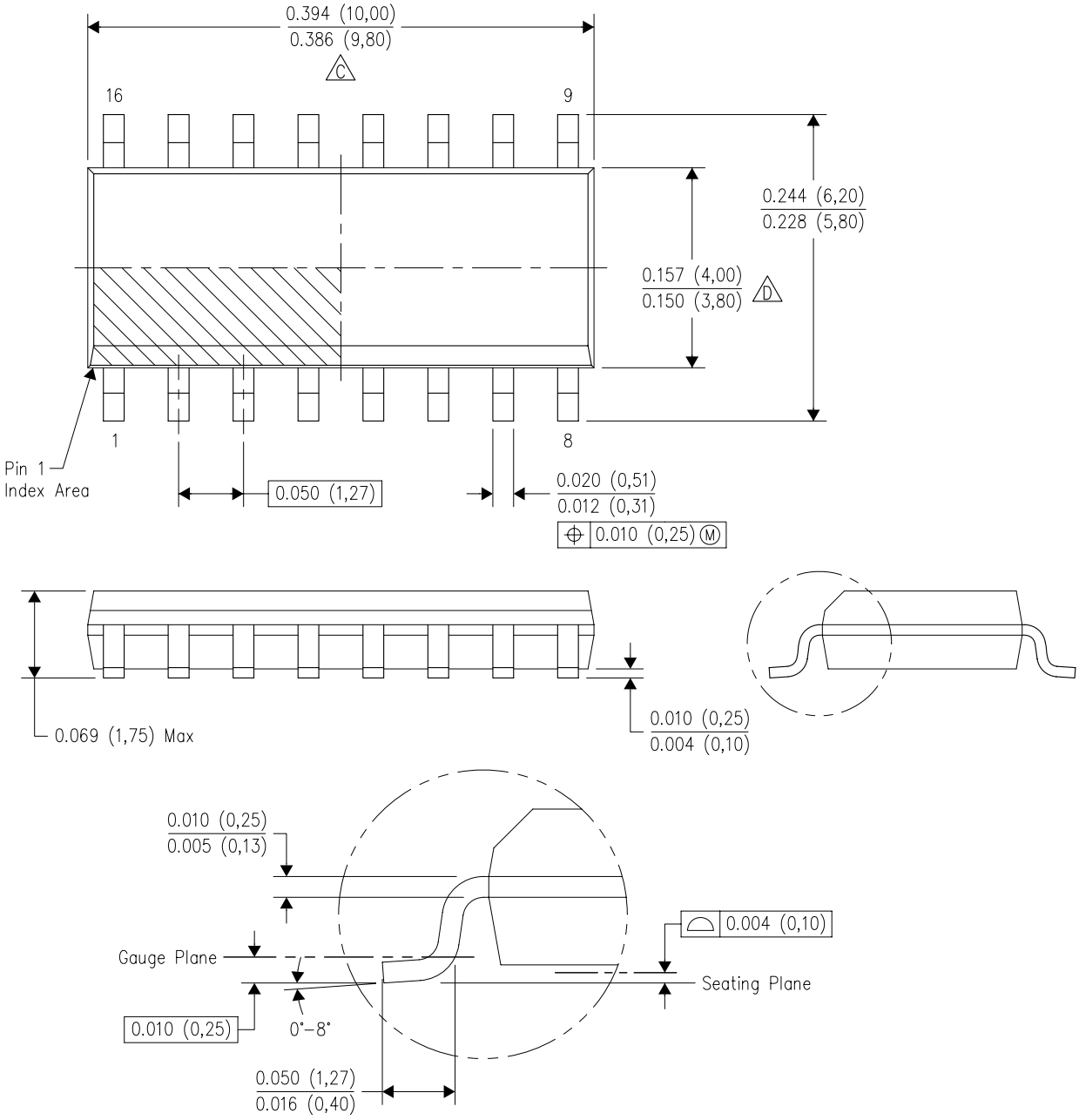

NOTES:
A. All linear dimensions are in inches (millimeters).
B. This drawing is subject to change without notice.
C. Body length does not include mold flash, protrusions, or gate burrs. Mold flash, protrusions, or gate burrs shall not exceed 0.006 (0,15) each side.
D. Body width does not include interlead flash. Interlead flash shall not exceed 0.017 (0,43) each side.
E. Reference JEDEC MS–012 variation AC.

PACKAGE OUTLINE

DB0016A

SSOP - 2 mm max height

SMALL OUTLINE PACKAGE

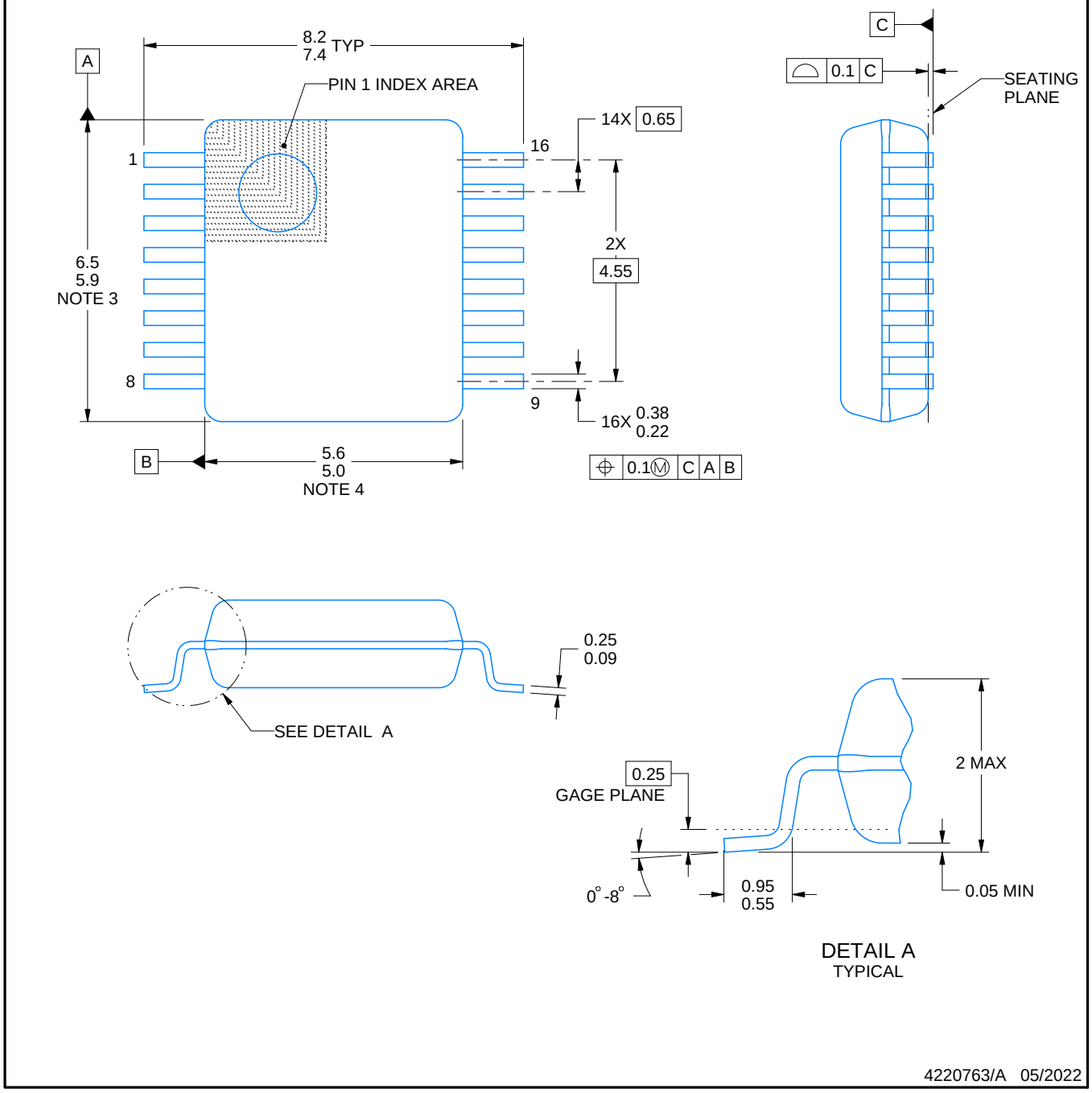

NOTES:

1. All linear dimensions are in millimeters. Any dimensions in parenthesis are for reference only. Dimensioning and tolerancing per ASME Y14.5M.
2. This drawing is subject to change without notice.
3. This dimension does not include mold flash, protrusions, or gate burrs. Mold flash, protrusions, or gate burrs shall not exceed 0.15 mm per side.
4. Reference JEDEC registration MO-150.

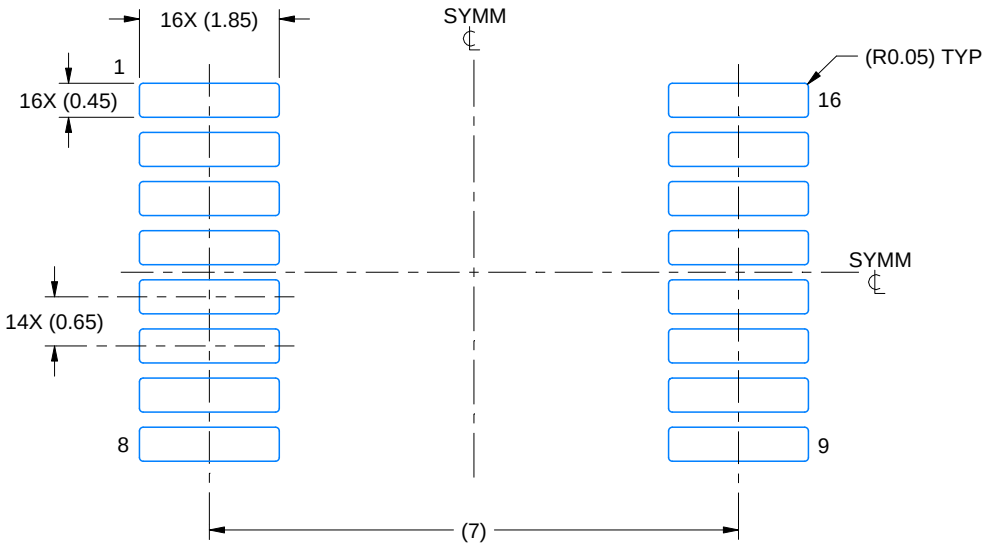

LAND PATTERN EXAMPLE
EXPOSED METAL SHOWN
SCALE: 10X

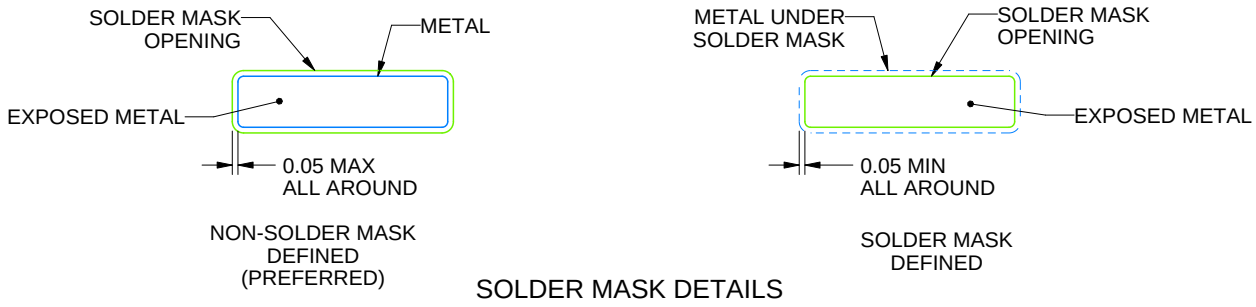

SOLDER MASK DETAILS

4220763/A 05/2022

NOTES: (continued)

5. Publication IPC-7351 may have alternate designs.
6. Solder mask tolerances between and around signal pads can vary based on board fabrication site.

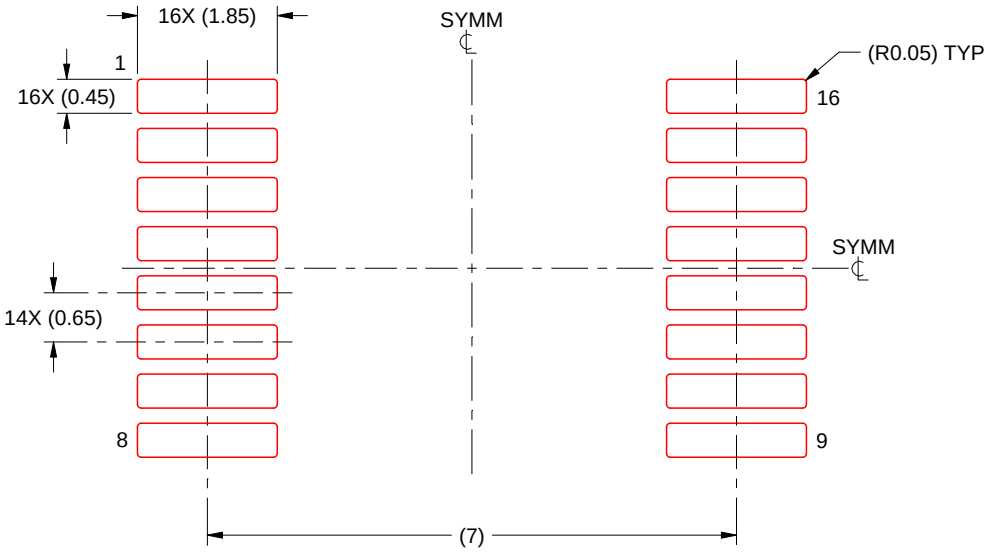

SOLDER PASTE EXAMPLE
BASED ON 0.125 mm THICK STENCIL
SCALE: 10X

4220763/A 05/2022

NOTES: (continued)

7. Laser cutting apertures with trapezoidal walls and rounded corners may offer better paste release. IPC-7525 may have alternate design recommendations.
8. Board assembly site may have different recommendations for stencil design.

GENERIC PACKAGE VIEW

FK 20

LCCC - 2.03 mm max height

8.89 x 8.89, 1.27 mm pitch

LEADLESS CERAMIC CHIP CARRIER

This image is a representation of the package family, actual package may vary.
Refer to the product data sheet for package details.

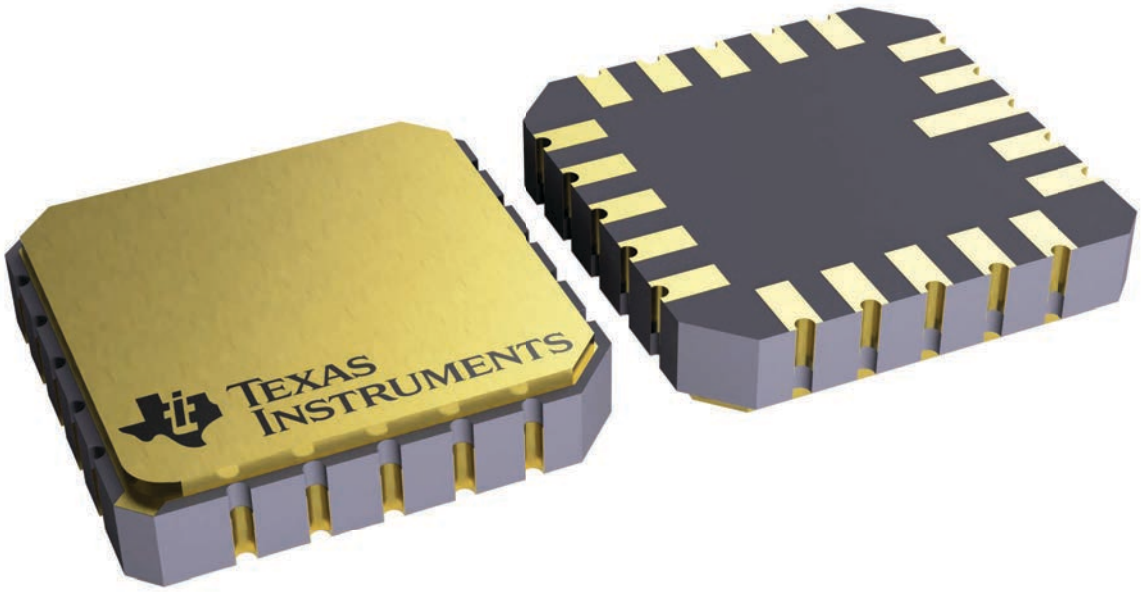

4229370VA\

J (R–GDIP–T**)

14 LEADS SHOWN

CERAMIC DUAL IN–LINE PACKAGE

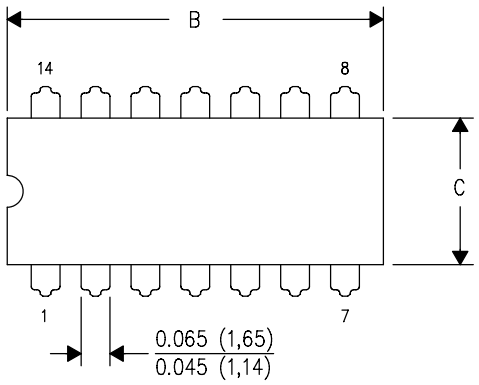

DIM \ PINS **	14	16	18	20
A	0.300 (7,62) BSC	0.300 (7,62) BSC	0.300 (7,62) BSC	0.300 (7,62) BSC
B MAX	0.785 (19,94)	.840 (21,34)	0.960 (24,38)	1.060 (26,92)
B MIN	—	—	—	—
C MAX	0.300 (7,62)	0.300 (7,62)	0.310 (7,87)	0.300 (7,62)
C MIN	0.245 (6,22)	0.245 (6,22)	0.220 (5,59)	0.245 (6,22)

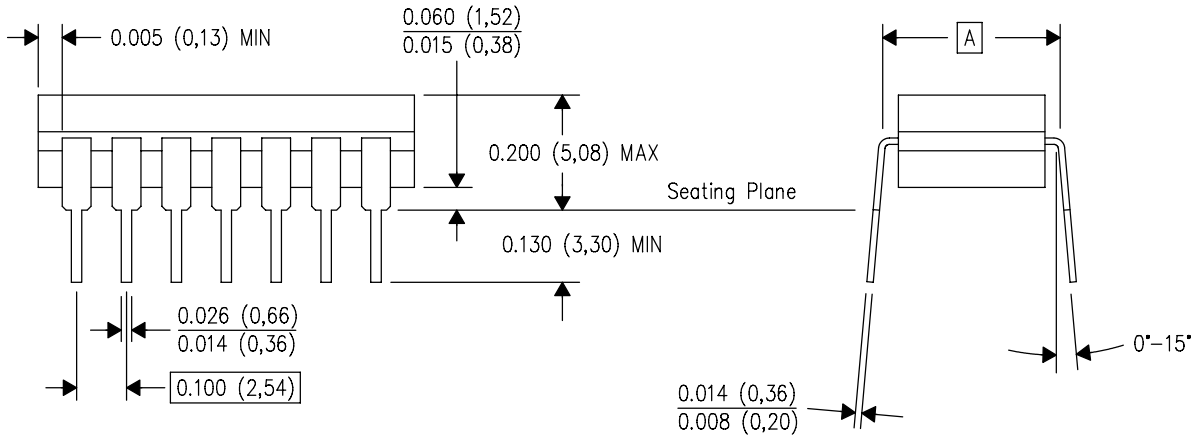

4040083/F 03/03

NOTES:
A. All linear dimensions are in inches (millimeters).
B. This drawing is subject to change without notice.
C. This package is hermetically sealed with a ceramic lid using glass frit.
D. Index point is provided on cap for terminal identification only on press ceramic glass frit seal only.
E. Falls within MIL STD 1835 GDIP1–T14, GDIP1–T16, GDIP1–T18 and GDIP1–T20.

PACKAGE OUTLINE

PW0016A

TSSOP - 1.2 mm max height

SMALL OUTLINE PACKAGE

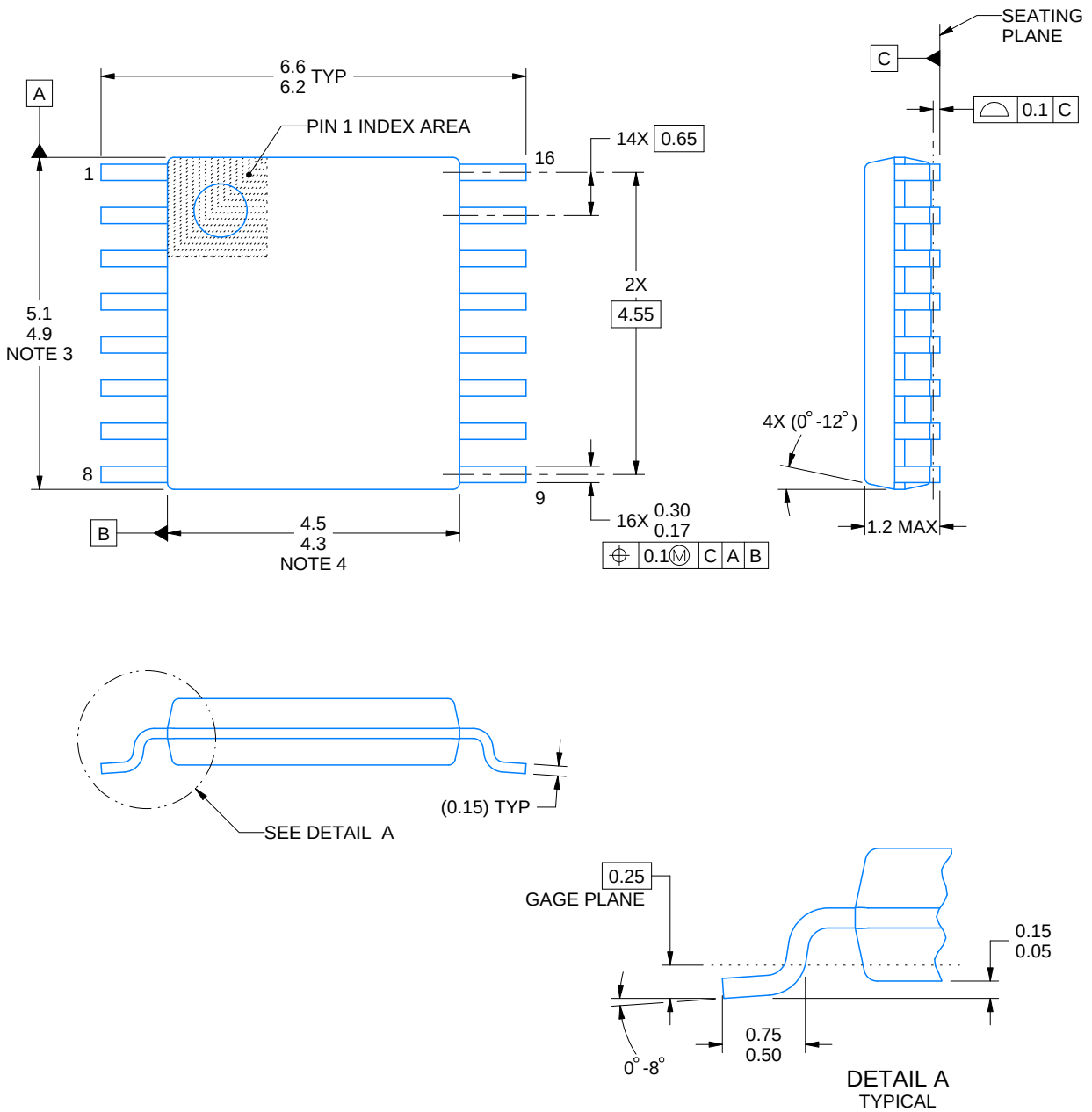

NOTES:

1. All linear dimensions are in millimeters. Any dimensions in parenthesis are for reference only. Dimensioning and tolerancing per ASME Y14.5M.
2. This drawing is subject to change without notice.
3. This dimension does not include mold flash, protrusions, or gate burrs. Mold flash, protrusions, or gate burrs shall not exceed 0.15 mm per side.
4. This dimension does not include interlead flash. Interlead flash shall not exceed 0.25 mm per side.
5. Reference JEDEC registration MO-153.

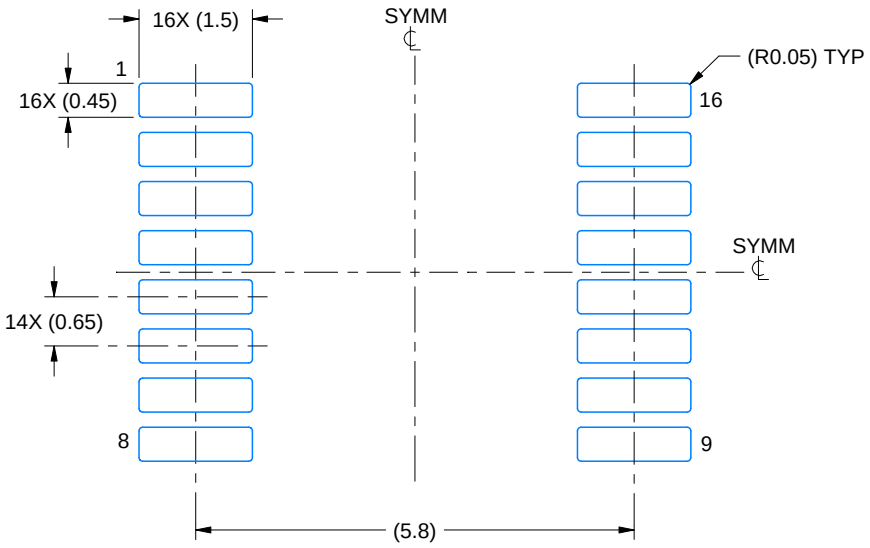

LAND PATTERN EXAMPLE
EXPOSED METAL SHOWN
SCALE: 10X



SOLDER MASK DETAILS

4220204/B 12/2023

NOTES: (continued)

6. Publication IPC-7351 may have alternate designs.
7. Solder mask tolerances between and around signal pads can vary based on board fabrication site.

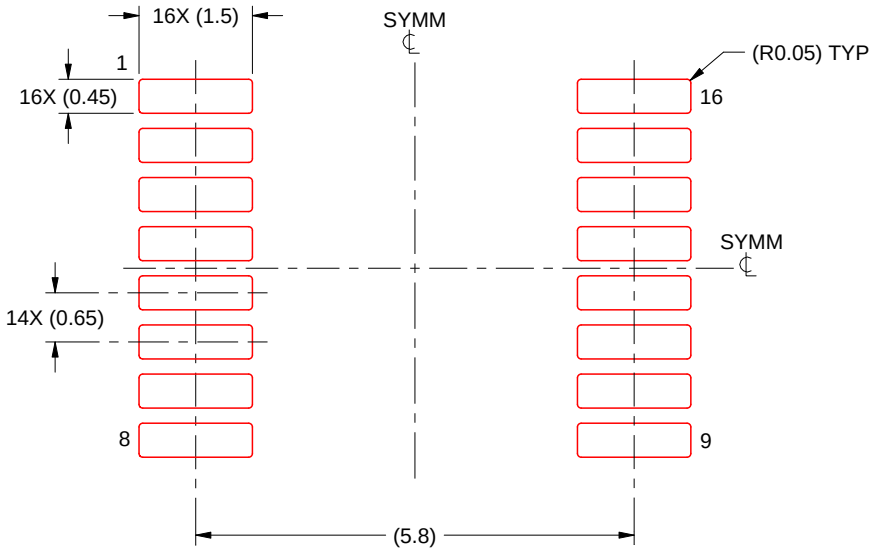

SOLDER PASTE EXAMPLE
BASED ON 0.125 mm THICK STENCIL
SCALE: 10X

4220204/B 12/2023

NOTES: (continued)

8. Laser cutting apertures with trapezoidal walls and rounded corners may offer better paste release. IPC-7525 may have alternate design recommendations.
9. Board assembly site may have different recommendations for stencil design.

N (R–PDIP–T**)

PLASTIC DUAL–IN–LINE PACKAGE

16 PINS SHOWN

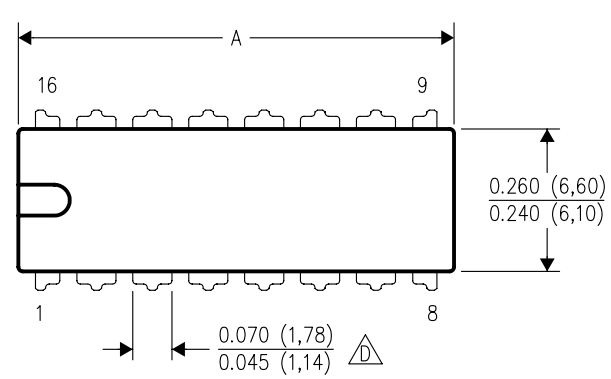

DIM \ PINS **	14	16	18	20
A MAX	0.775 (19,69)	0.775 (19,69)	0.920 (23,37)	1.060 (26,92)
A MIN	0.745 (18,92)	0.745 (18,92)	0.850 (21,59)	0.940 (23,88)
MS–001 VARIATION (C)	AA	BB	AC	AD

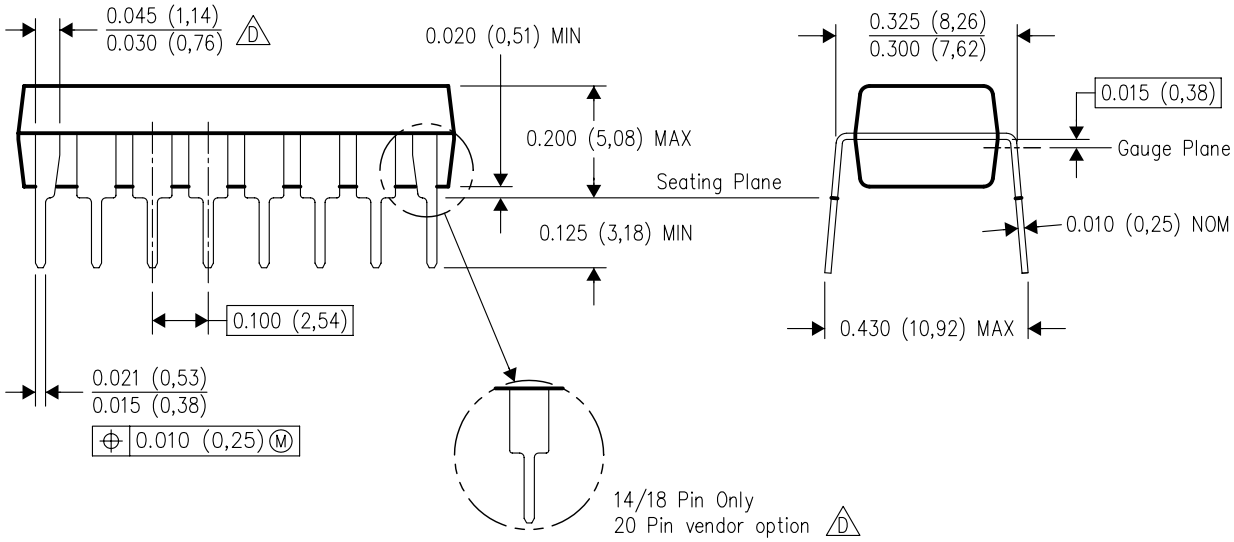

4040049/E 12/2002

NOTES:
A. All linear dimensions are in inches (millimeters).
B. This drawing is subject to change without notice.
C. Falls within JEDEC MS–001, except 18 and 20 pin minimum body length (Dim A).
D. The 20 pin end lead shoulder width is a vendor option, either half or full width.

重要通知和免责声明

TI“按原样”提供技术和可靠性数据（包括数据表）、设计资源（包括参考设计）、应用或其他设计建议、网络工具、安全信息和其他资源，不保证没有瑕疵且不做出任何明示或暗示的担保，包括但不限于对适销性、与某特定用途的适用性或不侵犯任何第三方知识产权的暗示担保。

这些资源可供使用 TI 产品进行设计的熟练开发人员使用。您将自行承担以下全部责任：(1) 针对您的应用选择合适的 TI 产品，(2) 设计、验证并测试您的应用，(3) 确保您的应用满足相应标准以及任何其他安全、安保法规或其他要求。

这些资源如有变更，恕不另行通知。TI 授权您仅可将这些资源用于研发本资源所述的 TI 产品的相关应用。严禁以其他方式对这些资源进行复制或展示。您无权使用任何其他 TI 知识产权或任何第三方知识产权。对于因您对这些资源的使用而对 TI 及其代表造成的任何索赔、损害、成本、损失和债务，您将全额赔偿，TI 对此概不负责。

TI 提供的产品受 TI 销售条款)、TI 通用质量指南 或 ti.com 上其他适用条款或 TI 产品随附的其他适用条款的约束。TI 提供这些资源并不会扩展或以其他方式更改 TI 针对 TI 产品发布的适用的担保或担保免责声明。 除非德州仪器 (TI) 明确将某产品指定为定制产品或客户特定产品，否则其产品均为按确定价格收入目录的标准通用器件。

TI 反对并拒绝您可能提出的任何其他或不同的条款。

版权所有 © 2026，德州仪器 (TI) 公司

最后更新日期：2025 年 10 月