SNx4HC393 双路 4 位二进制计数器

1 特性

- 2V 至 6V 的宽工作电压范围
- 输出可驱动多达 10 个 LSTTL 负载
- 低功耗：80 µA 最大 I_{CC}
- t_{pd} 典型值 = 13ns
- 5V 时，输出驱动为 ±4mA
- 低输入电流，最大值 1 µA
- 具有独立时钟的双路 4 位二进制计数器
- 针对每个 4 位计数器的直接清零
- 可将计数器封装数量减少 50%，从而显著提高系统密度

2 说明

'HC393 器件包含八个触发器和额外的门控，可在单个封装中实现两个独立的 4 位计数器。

器件信息

器件型号	封装(1)	封装尺寸(2)	本体尺寸(3)
SNx4HC393	D（SOIC，14）	8.65mm x 6mm	8.65mm x 3.9mm
	N（PDIP，14））	19.3mm x 9.4mm	19.3mm x 6.35mm
	NS（SOP，14）	10.3mm x 7.8mm	10.3mm x 5.3mm
	DB（SSOP，14）	6.2mm x 7.8mm	6.2mm x 5.3mm
	PW（TSSOP，14）	5mm x 6.4mm	5mm x 4.4mm
	DYY（SOT-23，14）	4.2mm x 3.26mm	4.2mm x 2mm
	J（CDIP，14）	19.55mm x 7.9mm	19.55mm x 6.7mm
	W（CFP，14）	9.21mm x 9mm	9.21mm x 6.28mm
	FK（LCCC，14）	8.9mm x 8.9mm	8.9mm x 8.9mm

(1) 如需了解更多信息，请参阅机械、封装和可订购信息。
(2) 封装尺寸（长 × 宽）为标称值，并包括引脚（如适用）。
(3) 本体尺寸（长 × 宽）为标称值，不包括引脚。

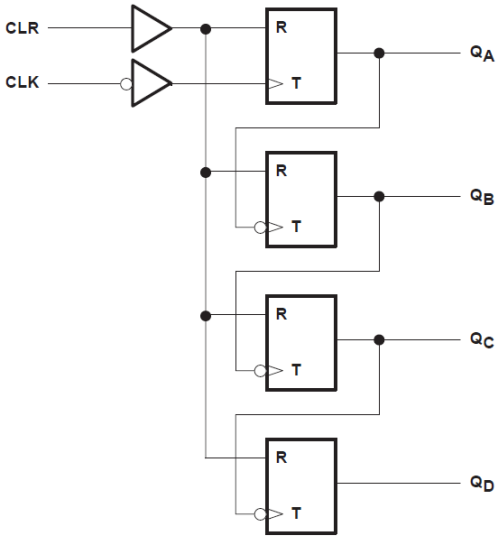

逻辑图，每个计数器（正逻辑）

本资源的原文使用英文撰写。 为方便起见，TI 提供了译文；由于翻译过程中可能使用了自动化工具，TI 不保证译文的准确性。 为确认准确性，请务必访问 ti.com 参考最新的英文版本（控制文档）。

内容

1 特性.....1
2 说明.....1
3 引脚配置和功能.....3
4 规格.....4
4.1 绝对最大额定值.....4
4.2 建议运行条件.....4
4.3 热性能信息.....4
4.4 电气特性.....5
4.5 时序要求.....5
4.6 开关特性.....6
4.7 工作特性.....6
5 参数测量信息.....7
6 详细说明.....8
6.1 概述.....8
6.2 功能方框图.....8
6.3 器件功能模式.....9
7 应用和实施.....10
7.1 电源相关建议.....10
7.2 布局.....10
8 器件和文档支持.....12
8.1 文档支持.....12
8.2 接收文档更新通知.....12
8.3 支持资源.....12
8.4 商标.....12
8.5 静电放电警告.....12
8.6 术语表.....12
9 修订历史记录.....12
10 机械、封装和可订购信息.....12

Copyright © 2025 Texas Instruments Incorporated

3 引脚配置和功能

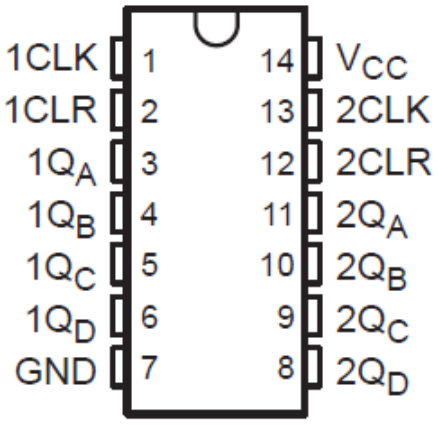

SN54HC393 J 或 W 封装，14 引脚 CDIP 或 CFP；SN74HC393 D、DB、DYY、N、NS 或 PW 封装；14 引脚 SOIC、SSOP、SOT-23、TVSOP、SOP 或 TSSOP
（顶视图）

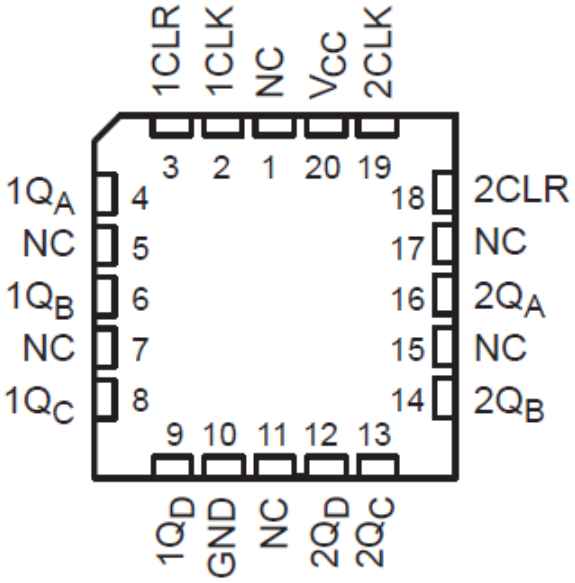

A. NC - 无内部连接

SN54HC393 FK 封装，20 引脚 LCCC
（顶视图）

表 3-1. 引脚功能

引脚		类型 [1]	说明
名称	编号		
1CLK	1	I	计数器 1 时钟输入
1CLR	2	I	计数器 1 清零输入
$1Q_A$	3	O	计数器 1 A 输出
$1Q_B$	4	O	计数器 1 B 输出
$1Q_C$	5	O	计数器 1 B 输出
$1Q_D$	6	O	计数器 1 B 输出
GND	7	G	接地
$2Q_D$	8	O	计数器 2 D 输出
$2Q_C$	9	O	计数器 2 C 输出
$2Q_B$	10	O	计数器 2 B 输出
$2Q_A$	11	O	计数器 2 A 输出
2CLR	12	I	计数器 2 清零输入
2CLK	13	I	计数器 2 时钟输入
V_{CC}	14	P	V_{CC}

1. I = 输入，O = 输出，I/O = 输入或输出，G = 接地，P = 电源。

Copyright © 2025 Texas Instruments Incorporated

4 规格

4.1 绝对最大额定值

在自然通风条件下的工作温度范围内测得（除非另有说明）(1)

			最小值	最大值	单位
V_{CC}	电源电压范围		-0.5	7	V
I_{IK}	输入钳位电流(2)	$V_I < 0V$ 或 $V_I > V_{CC}$		±20	mA
I_{OK}	输出钳位电流(2)	$V_O < 0V$ 或 $V_O > V_{CC}$		±20	mA
I_O	持续输出电流	$V_O = 0$ 至 V_{CC}		±25	mA
	通过 V_{CC} 或 GND 的持续电流			±50	mA
T_{stg}	贮存温度范围		-65	150	℃

(1) 超出*绝对最大额定值*下列出的应力可能会对器件造成永久损坏。这些仅为在应力额定值下的工作情况，对于额定值下的器件的功能性操作以及在超出*推荐的运行条件*下标明的任何其它条件下的操作，在此并未说明。长时间处于绝对最大额定条件下可能会影响器件的可靠性。

(2) 如果遵守输入和输出电流额定值，输入和输出电压可超过额定值。

4.2 建议运行条件

在自然通风条件下的工作温度范围内测得（除非另有说明）(1)

			SN54HC393			SN74HC393			单位
			最小值	标称值	最大值	最小值	标称值	最大值	
V_{CC}	电源电压		2	5	6	2	5	6	V
V_{IH}	高电平输入电压	V_{CC} = 2V	1.5			1.5			V
		V_{CC} = 4.5V	3.15			3.15			
		V_{CC} = 6V	4.2			4.2			
V_{IL}	低电平输入电压	V_{CC} = 2V			0.5			0.5	V
		V_{CC} = 4.5V			1.35			1.35	
		V_{CC} = 6V			1.8			1.8	
V_I	输入电压		0		V_{CC}	0		V_{CC}	V
V_O	输出电压		0		V_{CC}	0		V_{CC}	V
$\Delta t/\Delta v$(2)	输入转换上升/下降时间	V_{CC} = 2V			1000			1000	ns
		V_{CC} = 4.5V			500			500	
		V_{CC} = 6V			400			400	
T_A	自然通风条件下的工作温度范围		-55		125	-40		85	℃

(1) 器件所有的未使用输入必须保持在 V_{CC} 或 GND 以确保器件正常运行。请参阅 TI 应用报告 *CMOS 输入缓慢变化或悬空的影响*，文献编号 SCBA004。

(2) 如果此器件在阈值区间（从 V_{ILmax} = 0.5V 至 V_{IHmin} = 1.5V）内使用，感应接地有可能进入错误状态，从而产生双时钟。在 t_t = 1000ns 且 V_{CC} = 2V 的输入范围内工作不会损坏器件；但在功能上，在移位、计数或切换操作模式下不能确保 CLK 输入。

4.3 热性能信息

热指标(1)		SN74HC393						单位
		D (SOIC)	DB (SSOP)	DYY (SOT-23)	N (PDIP)	NS (SO)	PW (TSSOP)	
		14 引脚	14 引脚	14 引脚	14 引脚	14 引脚	14 引脚	
$R_{\theta JA}$	结至环境热阻	86	96	124.1	80	76	113	°C/W

(1) 有关新旧热指标的更多信息，请参阅半导体和 IC 封装热指标应用报告。

Copyright © 2025 Texas Instruments Incorporated

4.4 电气特性

在自然通风条件下的建议运行温度范围内测得（除非另有说明）

参数	测试条件		V_{CC}	T_A = 25°C			SN54HC393		SN74HC393		单位
				最小值	典型值	最大值	最小值	最大值	最小值	最大值	
V_{OH}	V_I = V_{IH} 或 V_{IL}	I_{OH}=-20 μA	2V	1.9	1.998		1.9		1.9		V
			4.5V	4.4	4.499		4.4		4.4		
			6V	5.9	5.999		5.9		5.9		
		I_{OH} = -4mA	4.5V	3.98	4.3		3.7		3.84		
		I_{OH} = -5.2mA	6V	5.48	5.8		5.2		5.34		
V_{OL}	V_I = V_{IH} 或 V_{IL}	I_{OL} = 20 μA	2V		0.002	0.1		0.1		0.1	V
			4.5V		0.001	0.1		0.1		0.1	
			6		0.001	0.1		0.1		0.1	
		I_{OL} = 4mA	4.5V		0.17	0.26		0.4		0.33	
		I_{OL} = 5.2mA	6V		0.15	0.26		0.4		0.33	
I_I	V_I = V_{CC} 或 0		6V			±0.1	±100		±1000		±1000	nA
I_{CC}	V_I = V_{CC} 或 0	I_O = 0	6V			8		160		80	μA
C_i			2V 至 6V		3	10		10		10	pF

4.5 时序要求

在自然通风条件下的建议运行温度范围内测得（除非另有说明）

参数			V_{CC}	T_A = 25°C		SN54HC393		SN74HC393		单位
				最小值	最大值	最小值	最大值	最小值	最大值	
f_{clock}	时钟频率		2V		6		4.2		5	MHz
			4.5V		31		21		25	
			6V		36		25		28	
t_w	脉冲持续时间	CLK 高电平或低电平	2V	80		120		100		ns
			4.5V	16		24		20		
			6V	14		20		18		
		CLR 高电平	2V	80		120		100		
			4.5V	16		24		20		
			6V	14		20		18		
t_{su}	安装时间，清零功能失效		2V	25		25		25		ns
			4.5V	5		5		5		
			6V	5		5		5		

Copyright © 2025 Texas Instruments Incorporated

4.6 开关特性

在建议的自然通风条件下的工作温度范围内，C_L = 50 pF（除非另有说明）(图 5-1)

参数	从（输入）	至（输出）	V_{CC}	T_A = 25°C			SN54HC393		SN74HC393		单位
				最小值	典型值	最大值	最小值	最大值	最小值	最大值	
f_{max}	CLK	Q_A	2V	6	10		4.2		5		MHz
			4.5V	31	50		21		25		
			6V	36	60		25		28		
t_{pd}	CLK	Q_A	2V		50	120		180		150	ns
			4.5V		15	24		36		30	
			6V		13	20		31		26	
		Q_B	2V		72	190		285		240	
			4.5V		22	38		57		47	
			6V		18	32		48		40	
		Q_C	2V		91	240		360		300	
			4.5V		28	48		72		60	
			6V		22	41		61		51	
		Q_D	2V		100	290		430		360	
			4.5V		32	58		87		72	
			6V		24	50		74		62	
t_{PHL}	CLR	不限	2V		45	165		250		205	
			4.5V		17	33		49		41	
			6V		14	28		42		35	
t_t		不限	2V		28	75		110		95	ns
			4.5V		8	15		22		19	
			6V		6	13		19		16	

4.7 工作特性

T_A = 25°C

参数		测试条件	典型值	单位
C_{PD}	功率耗散电容	无负载	40	pF

Copyright © 2025 Texas Instruments Incorporated

5 参数测量信息

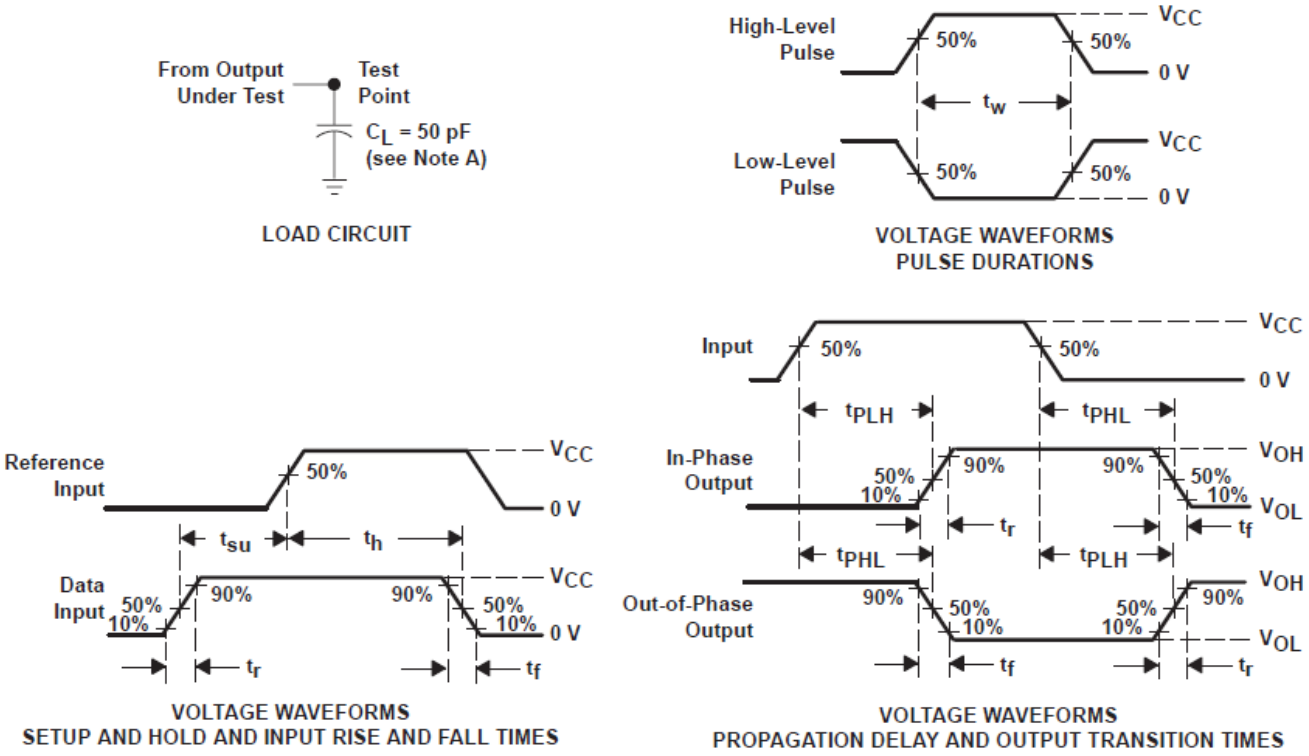

A. C_L 包括探头和测试夹具电容。

B. 任意选择波形之间的相位关系。所有输入脉冲均由具有以下特性的发生器提供：PRR ≤ 1MHz，Z_O = 50 Ω，t_r = 6ns，t_f = 6ns。

C. 对于时钟输入，f_{max} 是在输入占空比为 50% 时测量的。

D. 一次测量一个输出，每次测量一个输入转换。

E. t_{PLH} 和 t_{PHL} 与 t_{pd} 一样。

图 5-1. 负载电路和电压波形

6 详细说明

6.1 概述

'HC393 器件包含八个触发器和额外的门控，可在单个封装中实现两个独立的 4 位计数器。这些器件包含两个独立的 4 位二进制计数器，每个计数器都具有清零(CLR)输入和时钟(CLK)输入。每个封装都可以实现 N 位二进制计数器，可实现 256 位异步二进制计数器。'HC393 器件的每个计数器级都有并行输出，因此输入计数频率的任何因数都可用于系统计时信号。

6.2 功能方框图

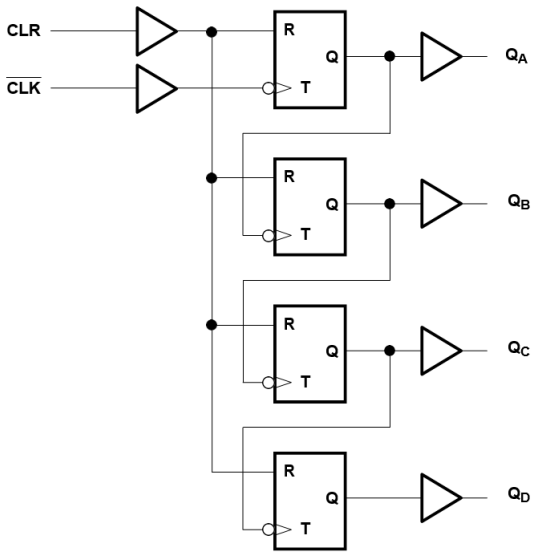

图 6-1. 逻辑图，每个计数器（正逻辑）

Copyright © 2025 Texas Instruments Incorporated

6.3 器件功能模式

表 6-1. 功能表计数序列
(每个缓冲器)

数量	输出			
	Q_D	Q_C	Q_B	Q_A
0	L	L	L	L
1	L	L	L	H
2	L	L	H	L
3	L	L	H	H
4	L	H	L	L
5	L	H	L	H
6	L	H	H	L
7	L	H	H	H
8	H	L	L	L
9	H	L	L	H
10	H	L	H	L
11	H	L	H	H
12	H	H	L	L
13	H	H	L	H
14	H	H	H	L
15	H	H	H	H

Copyright © 2025 Texas Instruments Incorporated

7 应用和实施

备注

以下应用部分中的信息不属于 TI 器件规格的范围，TI 不担保其准确性和完整性。TI 的客 户应负责确定器件是否适用于其应用。客户应验证并测试其设计，以确保系统功能。

7.1 电源相关建议

电源可以是*建议运行条件* 中最小和最大电源电压额定值之间的任何电压。每个 V_{CC} 端子均应具有一个良好的旁路电容器，以防止功率干扰。建议为该器件使用 0.1 µF 电容器。可以并联多个旁路电容器以抑制不同的噪声频率。0.1 µF 和 1 µF 电容器通常并联使用。为了获得最佳效果，旁路电容器必须尽可能靠近电源端子安装。

7.2 布局

7.2.1 布局指南

- 旁路电容器的放置
  - 靠近器件的正电源端子放置
  - 提供电气短接地返回路径
  - 使用宽布线以最大限度减小阻抗
  - 尽可能将器件、电容器和布线保持在电路板的同一面
- 信号布线几何形状
  - 8mil 至 12mil 布线宽度
  - 布线长度小于 12cm 可最大限度减轻传输线路影响
  - 避免信号布线出现 90° 角
  - 在信号布线下方使用不间断的接地平面
  - 通过接地对信号布线周围的区域进行泛洪填充
  - 对于长度超过 12cm 的布线
    - 使用阻抗受控的布线
    - 在输出端附近使用串联阻尼电阻进行源端接
    - 避免分支；对必须单独分支的信号进行缓冲

7.2.2 布局示例

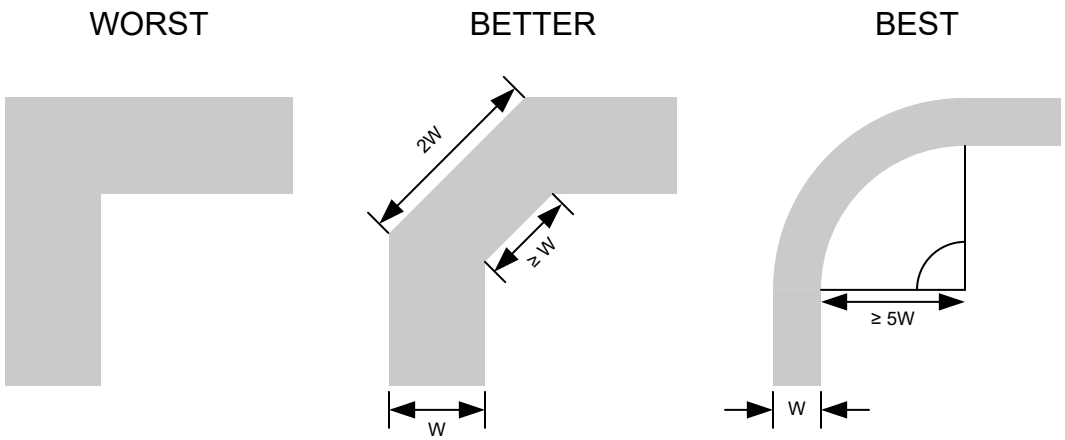

图 7-1. 可改善信号完整性的布线转角示例

Copyright © 2025 Texas Instruments Incorporated

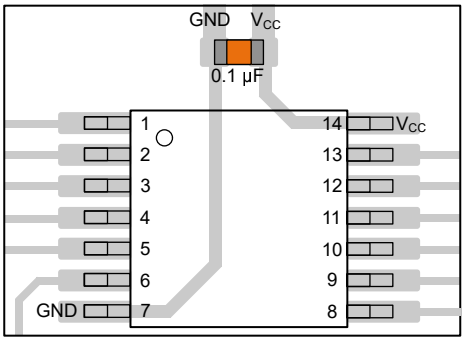

图 7-2. TSSOP 和类似封装的旁路电容器放置示例

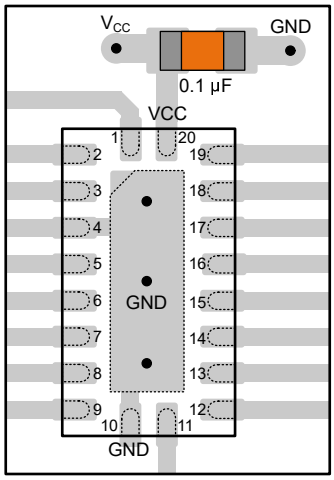

图 7-3. WQFN 和类似封装的旁路电容器放置示例

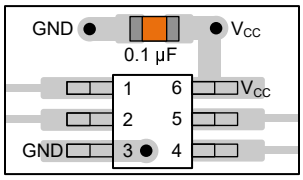

图 7-4. SOT、SC70 和类似封装的旁路电容器放置示例

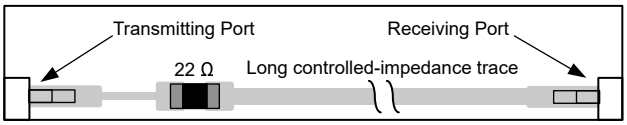

图 7-5. 可改善信号完整性的阻尼电阻放置示例

8 器件和文档支持

TI 提供广泛的开发工具。下面列出了用于评估器件性能、生成代码和开发解决方案的工具和软件。

8.1 文档支持

8.1.1 相关文档

8.2 接收文档更新通知

要接收文档更新通知，请导航至 ti.com 上的器件产品文件夹。点击*通知* 进行注册，即可每周接收产品信息更改摘要。有关更改的详细信息，请查看任何已修订文档中包含的修订历史记录。

8.3 支持资源

TI E2E™ 中文支持论坛是工程师的重要参考资料，可直接从专家处获得快速、经过验证的解答和设计帮助。搜索现有解答或提出自己的问题，获得所需的快速设计帮助。

链接的内容由各个贡献者“按原样”提供。这些内容并不构成 TI 技术规范，并且不一定反映 TI 的观点；请参阅 TI 的使用条款。

8.4 商标

TI E2E™ is a trademark of Texas Instruments.
所有商标均为其各自所有者的财产。

8.5 静电放电警告

静电放电 (ESD) 会损坏这个集成电路。德州仪器 (TI) 建议通过适当的预防措施处理所有集成电路。如果不遵守正确的处理和安装程序，可能会损坏集成电路。

ESD 的损坏小至导致微小的性能降级，大至整个器件故障。精密的集成电路可能更容易受到损坏，这是因为非常细微的参数更改都可能会导致器件与其发布的规格不相符。

8.6 术语表

TI 术语表	本术语表列出并解释了术语、首字母缩略词和定义。

9 修订历史记录

注：以前版本的页码可能与当前版本的页码不同

Changes from Revision D (July 2003) to Revision E (December 2024)	Page
• 添加了*器件信息* 表、*引脚功能* 表、*热性能信息* 表、*器件功能模式*、”应用和实施“部分、*器件和文档支持* 部分以及*机械、封装和订购信息* 部分	1
• 向 *器件信息*表，*引脚功能和配置*部分以及*热性能信息*表中添加 DDY 封装	1

10 机械、封装和可订购信息

以下页面包含机械、封装和可订购信息。这些信息是指定器件可用的最新数据。数据如有变更，恕不另行通知，且不会对此文档进行修订。有关此数据表的浏览器版本，请查阅左侧的导航栏。

Copyright © 2025 Texas Instruments Incorporated

PACKAGING INFORMATION

Orderable part number	Status (1)	Material type (2)	Package | Pins	Package qty | Carrier	RoHS (3)	Lead finish/ Ball material (4)	MSL rating/ Peak reflow (5)	Op temp (°C)	Part marking (6)
84100012A	Active	Production	LCCC (FK) | 20	55 | TUBE	No	SNPB	N/A for Pkg Type	-55 to 125	84100012A SNJ54HC 393FK
8410001CA	Active	Production	CDIP (J) | 14	25 | TUBE	No	SNPB	N/A for Pkg Type	-55 to 125	8410001CA SNJ54HC393J
8410001DA	Active	Production	CFP (W) | 14	25 | TUBE	No	SNPB	N/A for Pkg Type	-55 to 125	8410001DA SNJ54HC393W
JM38510/66309BCA	Active	Production	CDIP (J) | 14	25 | TUBE	No	SNPB	N/A for Pkg Type	-55 to 125	JM38510/ 66309BCA
JM38510/66309BCA.A	Active	Production	CDIP (J) | 14	25 | TUBE	No	SNPB	N/A for Pkg Type	-55 to 125	JM38510/ 66309BCA
M38510/66309BCA	Active	Production	CDIP (J) | 14	25 | TUBE	No	SNPB	N/A for Pkg Type	-55 to 125	JM38510/ 66309BCA
SN54HC393J	Active	Production	CDIP (J) | 14	25 | TUBE	No	SNPB	N/A for Pkg Type	-55 to 125	SN54HC393J
SN54HC393J.A	Active	Production	CDIP (J) | 14	25 | TUBE	No	SNPB	N/A for Pkg Type	-55 to 125	SN54HC393J
SN74HC393D	Obsolete	Production	SOIC (D) | 14	-	-	Call TI	Call TI	-40 to 85	HC393
SN74HC393DBR	Active	Production	SSOP (DB) | 14	2000 | LARGE T&R	Yes	NIPDAU	Level-1-260C-UNLIM	-40 to 85	HC393
SN74HC393DBR.A	Active	Production	SSOP (DB) | 14	2000 | LARGE T&R	Yes	NIPDAU	Level-1-260C-UNLIM	-40 to 85	HC393
SN74HC393DR	Active	Production	SOIC (D) | 14	2500 | LARGE T&R	Yes	NIPDAU | SN	Level-1-260C-UNLIM	-40 to 85	HC393
SN74HC393DR.A	Active	Production	SOIC (D) | 14	2500 | LARGE T&R	Yes	NIPDAU	Level-1-260C-UNLIM	-40 to 85	HC393
SN74HC393DT	Obsolete	Production	SOIC (D) | 14	-	-	Call TI	Call TI	-40 to 85	HC393
SN74HC393N	Active	Production	PDIP (N) | 14	25 | TUBE	Yes	NIPDAU	N/A for Pkg Type	-40 to 85	SN74HC393N
SN74HC393N.A	Active	Production	PDIP (N) | 14	25 | TUBE	Yes	NIPDAU	N/A for Pkg Type	-40 to 85	SN74HC393N
SN74HC393NSR	Active	Production	SOP (NS) | 14	2000 | LARGE T&R	Yes	NIPDAU	Level-1-260C-UNLIM	-40 to 85	HC393
SN74HC393NSR.A	Active	Production	SOP (NS) | 14	2000 | LARGE T&R	Yes	NIPDAU	Level-1-260C-UNLIM	-40 to 85	HC393
SN74HC393PW	Obsolete	Production	TSSOP (PW) | 14	-	-	Call TI	Call TI	-40 to 85	HC393
SN74HC393PWR	Active	Production	TSSOP (PW) | 14	2000 | LARGE T&R	Yes	NIPDAU | SN	Level-1-260C-UNLIM	-40 to 85	HC393
SN74HC393PWR.A	Active	Production	TSSOP (PW) | 14	2000 | LARGE T&R	Yes	NIPDAU	Level-1-260C-UNLIM	-40 to 85	HC393
SN74HC393PWR1G4	Active	Production	TSSOP (PW) | 14	2000 | LARGE T&R	Yes	NIPDAU	Level-1-260C-UNLIM	-40 to 85	HC393
SN74HC393PWT	Obsolete	Production	TSSOP (PW) | 14	-	-	Call TI	Call TI	-40 to 85	HC393

Orderable part number	Status (1)	Material type (2)	Package | Pins	Package qty | Carrier	RoHS (3)	Lead finish/ Ball material (4)	MSL rating/ Peak reflow (5)	Op temp (°C)	Part marking (6)
SN74HCS393DYYR	Active	Production	SOT-23-THIN (DYY) | 14	3000 | LARGE T&R	Yes	NIPDAU	Level-1-260C-UNLIM	-40 to 125	HCS393
SN74HCS393DYYR.A	Active	Production	SOT-23-THIN (DYY) | 14	3000 | LARGE T&R	Yes	NIPDAU	Level-1-260C-UNLIM	-40 to 125	HCS393
SNJ54HC393FK	Active	Production	LCCC (FK) | 20	55 | TUBE	No	SNPB	N/A for Pkg Type	-55 to 125	84100012A SNJ54HC 393FK
SNJ54HC393FK.A	Active	Production	LCCC (FK) | 20	55 | TUBE	No	SNPB	N/A for Pkg Type	-55 to 125	84100012A SNJ54HC 393FK
SNJ54HC393J	Active	Production	CDIP (J) | 14	25 | TUBE	No	SNPB	N/A for Pkg Type	-55 to 125	8410001CA SNJ54HC393J
SNJ54HC393J.A	Active	Production	CDIP (J) | 14	25 | TUBE	No	SNPB	N/A for Pkg Type	-55 to 125	8410001CA SNJ54HC393J
SNJ54HC393W	Active	Production	CFP (W) | 14	25 | TUBE	No	SNPB	N/A for Pkg Type	-55 to 125	8410001DA SNJ54HC393W
SNJ54HC393W.A	Active	Production	CFP (W) | 14	25 | TUBE	No	SNPB	N/A for Pkg Type	-55 to 125	8410001DA SNJ54HC393W

(1) **Status:** For more details on status, see our product life cycle.

(2) **Material type:** When designated, preproduction parts are prototypes/experimental devices, and are not yet approved or released for full production. Testing and final process, including without limitation quality assurance, reliability performance testing, and/or process qualification, may not yet be complete, and this item is subject to further changes or possible discontinuation. If available for ordering, purchases will be subject to an additional waiver at checkout, and are intended for early internal evaluation purposes only. These items are sold without warranties of any kind.

(3) **RoHS values:** Yes, No, RoHS Exempt. See the TI RoHS Statement for additional information and value definition.

(4) **Lead finish/Ball material:** Parts may have multiple material finish options. Finish options are separated by a vertical ruled line. Lead finish/Ball material values may wrap to two lines if the finish value exceeds the maximum column width.

(5) **MSL rating/Peak reflow:** The moisture sensitivity level ratings and peak solder (reflow) temperatures. In the event that a part has multiple moisture sensitivity ratings, only the lowest level per JEDEC standards is shown. Refer to the shipping label for the actual reflow temperature that will be used to mount the part to the printed circuit board.

(6) **Part marking:** There may be an additional marking, which relates to the logo, the lot trace code information, or the environmental category of the part.

Multiple part markings will be inside parentheses. Only one part marking contained in parentheses and separated by a "~" will appear on a part. If a line is indented then it is a continuation of the previous line and the two combined represent the entire part marking for that device.

Important Information and Disclaimer: The information provided on this page represents TI's knowledge and belief as of the date that it is provided. TI bases its knowledge and belief on information provided by third parties, and makes no representation or warranty as to the accuracy of such information. Efforts are underway to better integrate information from third parties. TI has taken and continues to take reasonable steps to provide representative and accurate information but may not have conducted destructive testing or chemical analysis on incoming materials and chemicals. TI and TI suppliers consider certain information to be proprietary, and thus CAS numbers and other limited information may not be available for release.

In no event shall TI's liability arising out of such information exceed the total purchase price of the TI part(s) at issue in this document sold by TI to Customer on an annual basis.

OTHER QUALIFIED VERSIONS OF SN54HC393, SN74HC393 :

- Catalog : SN74HC393
- Military : SN54HC393

NOTE: Qualified Version Definitions:

- Catalog - TI's standard catalog product
- Military - QML certified for Military and Defense Applications

TAPE AND REEL INFORMATION

REEL DIMENSIONS

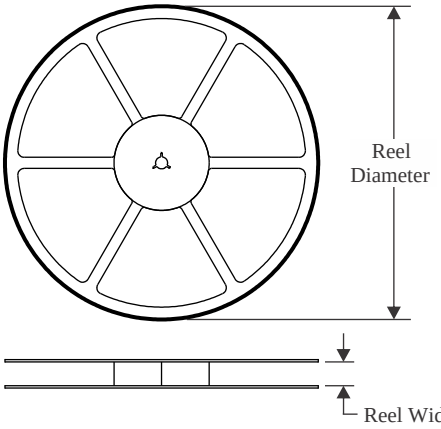

TAPE DIMENSIONS

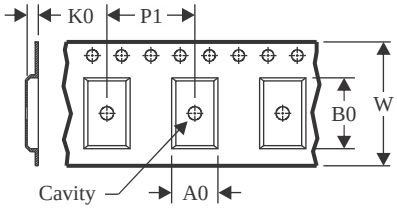

A0	Dimension designed to accommodate the component width
B0	Dimension designed to accommodate the component length
K0	Dimension designed to accommodate the component thickness
W	Overall width of the carrier tape
P1	Pitch between successive cavity centers

QUADRANT ASSIGNMENTS FOR PIN 1 ORIENTATION IN TAPE

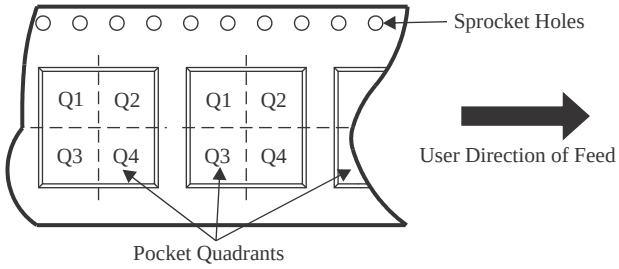

*All dimensions are nominal

Device	Package Type	Package Drawing	Pins	SPQ	Reel Diameter (mm)	Reel Width W1 (mm)	A0 (mm)	B0 (mm)	K0 (mm)	P1 (mm)	W (mm)	Pin1 Quadrant
SN74HC393DBR	SSOP	DB	14	2000	330.0	16.4	8.35	6.6	2.4	12.0	16.0	Q1
SN74HC393DR	SOIC	D	14	2500	330.0	16.4	6.5	9.0	2.1	8.0	16.0	Q1
SN74HC393NSR	SOP	NS	14	2000	330.0	16.4	8.1	10.4	2.5	12.0	16.0	Q1
SN74HC393NSR	SOP	NS	14	2000	330.0	16.4	8.45	10.55	2.5	12.0	16.2	Q1
SN74HC393PWR	TSSOP	PW	14	2000	330.0	12.4	6.9	5.3	1.6	8.0	12.0	Q1
SN74HC393PWR	TSSOP	PW	14	2000	330.0	12.4	6.9	5.6	1.6	8.0	12.0	Q1
SN74HC393PWR	TSSOP	PW	14	2000	330.0	12.4	6.9	5.6	1.6	8.0	12.0	Q1
SN74HC393PWR1G4	TSSOP	PW	14	2000	330.0	12.4	6.9	5.6	1.6	8.0	12.0	Q1
SN74HCS393DYYR	SOT-23-THIN	DYY	14	3000	330.0	12.4	4.8	3.6	1.6	8.0	12.0	Q3

TAPE AND REEL BOX DIMENSIONS

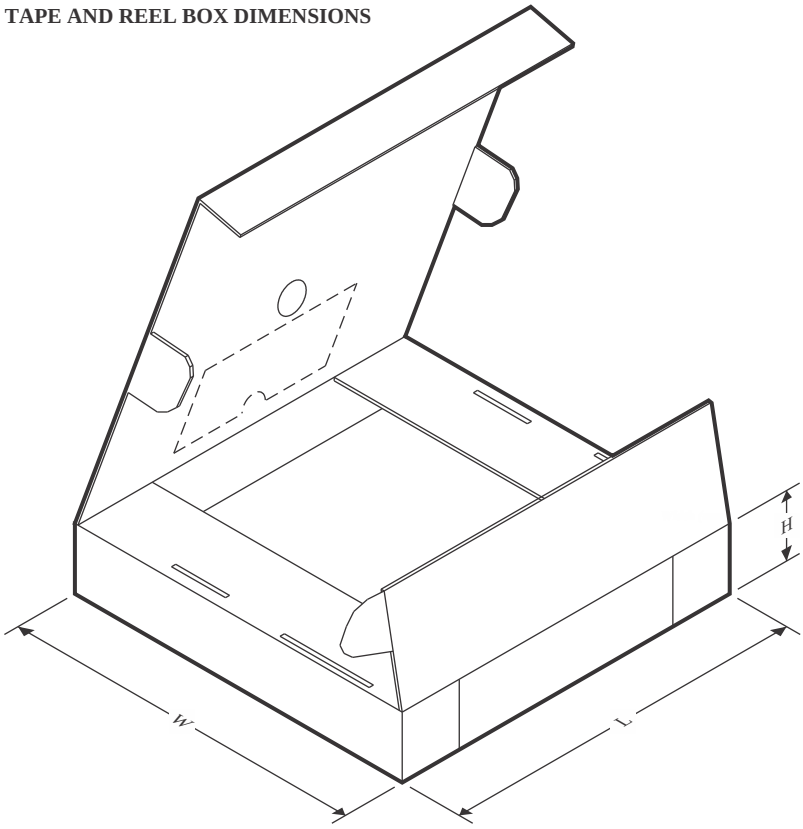

*All dimensions are nominal

Device	Package Type	Package Drawing	Pins	SPQ	Length (mm)	Width (mm)	Height (mm)
SN74HC393DBR	SSOP	DB	14	2000	353.0	353.0	32.0
SN74HC393DR	SOIC	D	14	2500	353.0	353.0	32.0
SN74HC393NSR	SOP	NS	14	2000	353.0	353.0	32.0
SN74HC393NSR	SOP	NS	14	2000	353.0	353.0	32.0
SN74HC393PWR	TSSOP	PW	14	2000	367.0	367.0	35.0
SN74HC393PWR	TSSOP	PW	14	2000	356.0	356.0	35.0
SN74HC393PWR	TSSOP	PW	14	2000	353.0	353.0	32.0
SN74HC393PWR1G4	TSSOP	PW	14	2000	356.0	356.0	35.0
SN74HCS393DYYR	SOT-23-THIN	DYY	14	3000	336.6	336.6	31.8

TUBE

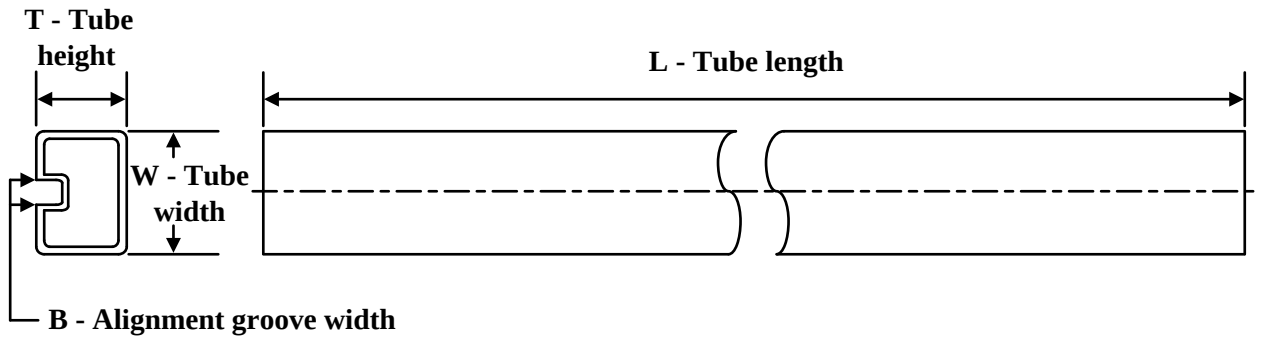

*All dimensions are nominal

Device	Package Name	Package Type	Pins	SPQ	L (mm)	W (mm)	T (µm)	B (mm)
84100012A	FK	LCCC	20	55	506.98	12.06	2030	NA
8410001DA	W	CFP	14	25	506.98	26.16	6220	NA
SN74HC393N	N	PDIP	14	25	506	13.97	11230	4.32
SN74HC393N	N	PDIP	14	25	506	13.97	11230	4.32
SN74HC393N.A	N	PDIP	14	25	506	13.97	11230	4.32
SN74HC393N.A	N	PDIP	14	25	506	13.97	11230	4.32
SNJ54HC393FK	FK	LCCC	20	55	506.98	12.06	2030	NA
SNJ54HC393FK.A	FK	LCCC	20	55	506.98	12.06	2030	NA
SNJ54HC393W	W	CFP	14	25	506.98	26.16	6220	NA
SNJ54HC393W.A	W	CFP	14	25	506.98	26.16	6220	NA

PACKAGE OUTLINE

DYY0014A

SOT-23-THIN - 1.1 mm max height

PLASTIC SMALL OUTLINE

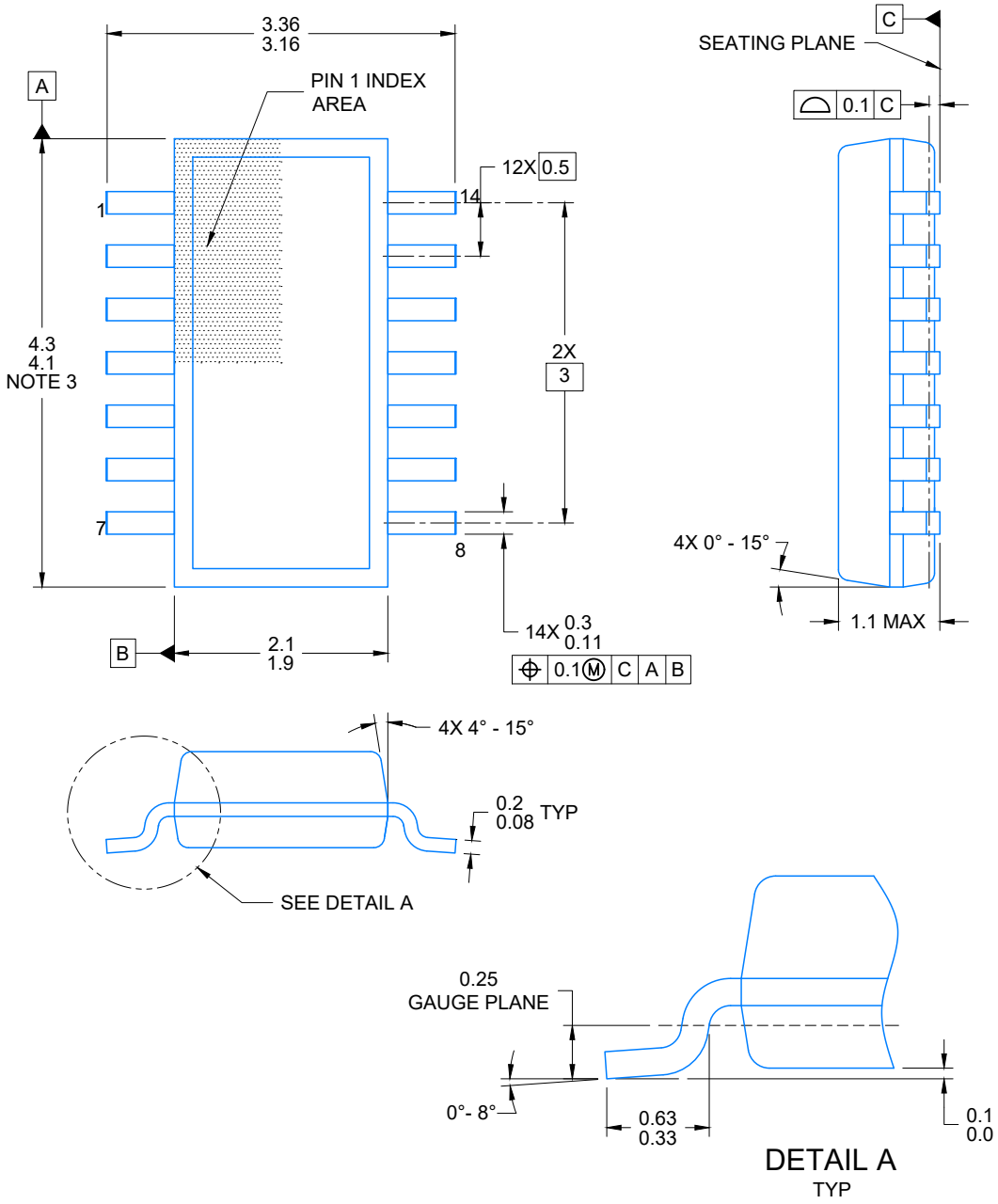

NOTES:

1. All linear dimensions are in millimeters. Any dimensions in parenthesis are for reference only. Dimensioning and tolerancing per ASME Y14.5M.
2. This drawing is subject to change without notice.
3. This dimension does not include mold flash, protrusions, or gate burrs. Mold flash, protrusions, or gate burrs shall not exceed 0.15 per side.
4. This dimension does not include interlead flash. Interlead flash shall not exceed 0.50 per side.
5. Reference JEDEC Registration MO-345, Variation AB

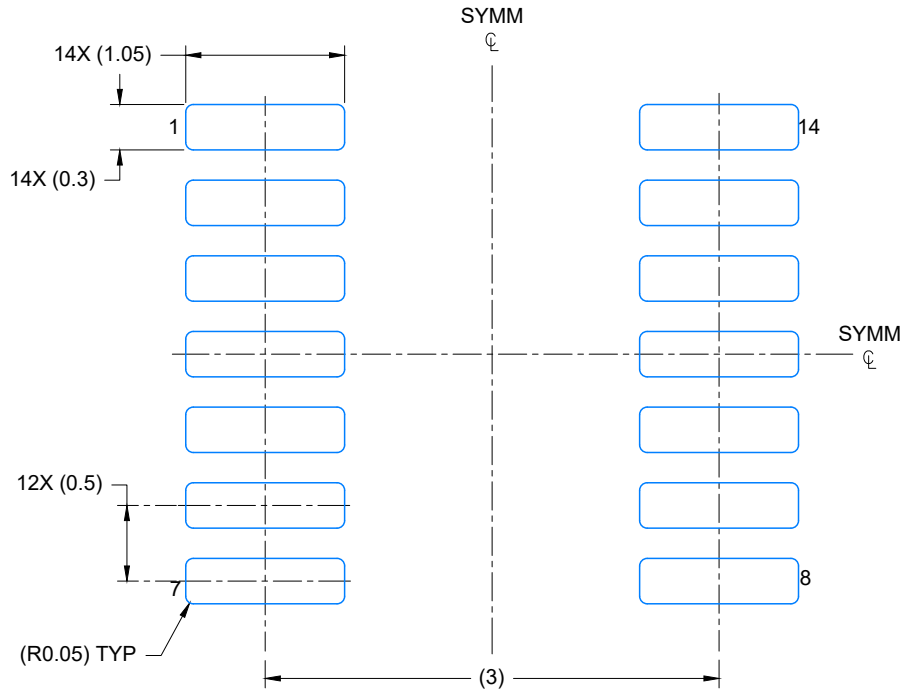

LAND PATTERN EXAMPLE
EXPOSED METAL SHOWN
SCALE: 20X

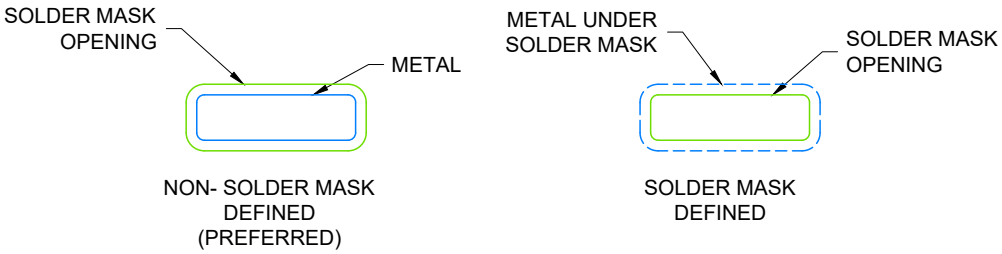

SOLDER MASK DETAILS

4224643/D 07/2024

NOTES: (continued)

6. Publication IPC-7351 may have alternate designs.
7. Solder mask tolerances between and around signal pads can vary based on board fabrication site.

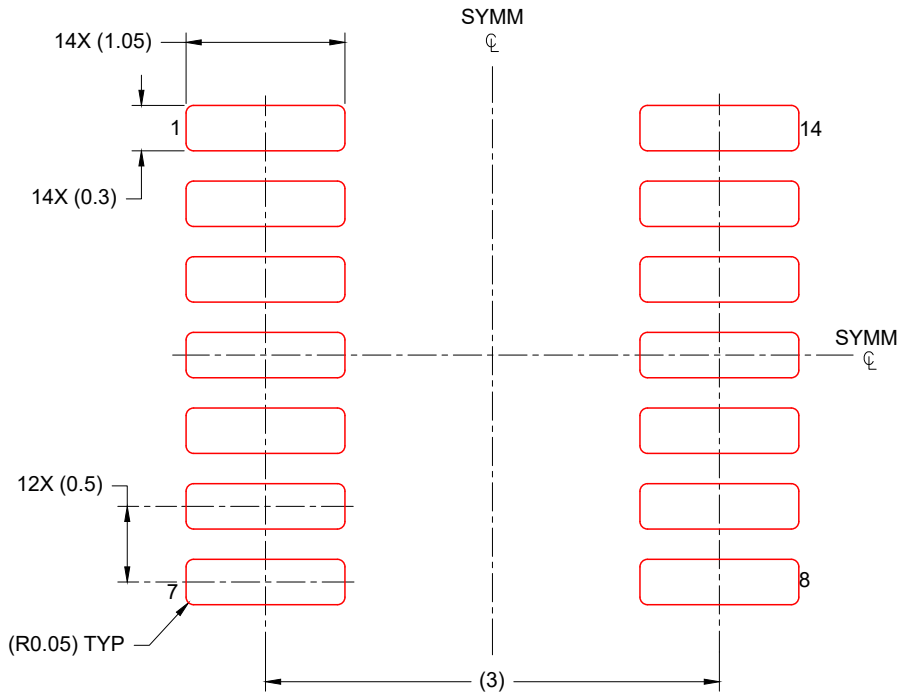

SOLDER PASTE EXAMPLE
BASED ON 0.125 mm THICK STENCIL
SCALE: 20X

4224643/D 07/2024

NOTES: (continued)

8. Laser cutting apertures with trapezoidal walls and rounded corners may offer better paste release. IPC-7525 may have alternate design recommendations.
9. Board assembly site may have different recommendations for stencil design.

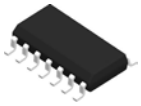

PACKAGE OUTLINE

D0014A

SOIC - 1.75 mm max height

SMALL OUTLINE INTEGRATED CIRCUIT

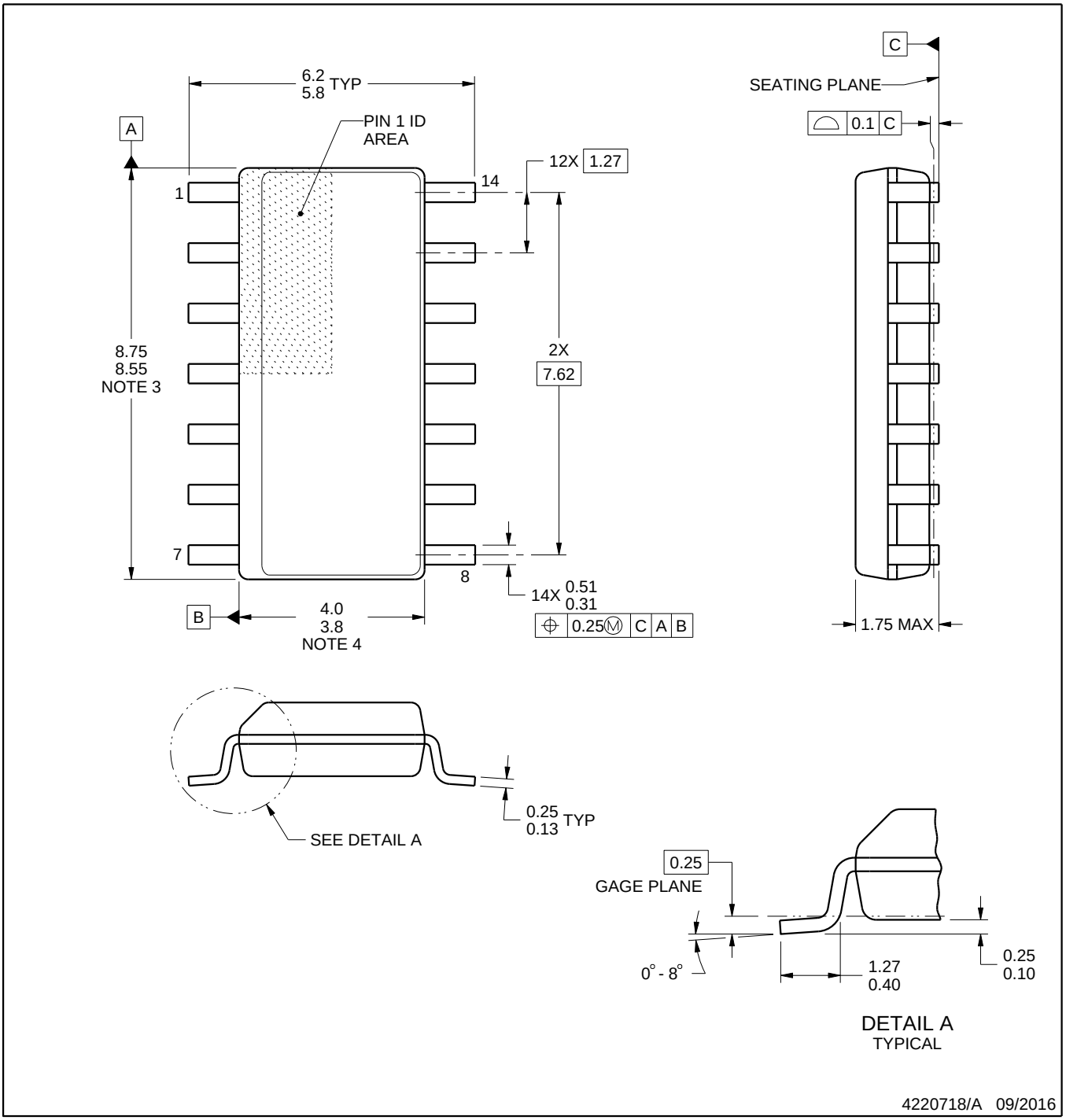

NOTES:

1. All linear dimensions are in millimeters. Dimensions in parenthesis are for reference only. Dimensioning and tolerancing per ASME Y14.5M.
2. This drawing is subject to change without notice.
3. This dimension does not include mold flash, protrusions, or gate burrs. Mold flash, protrusions, or gate burrs shall not exceed 0.15 mm, per side.
4. This dimension does not include interlead flash. Interlead flash shall not exceed 0.43 mm, per side.
5. Reference JEDEC registration MS-012, variation AB.

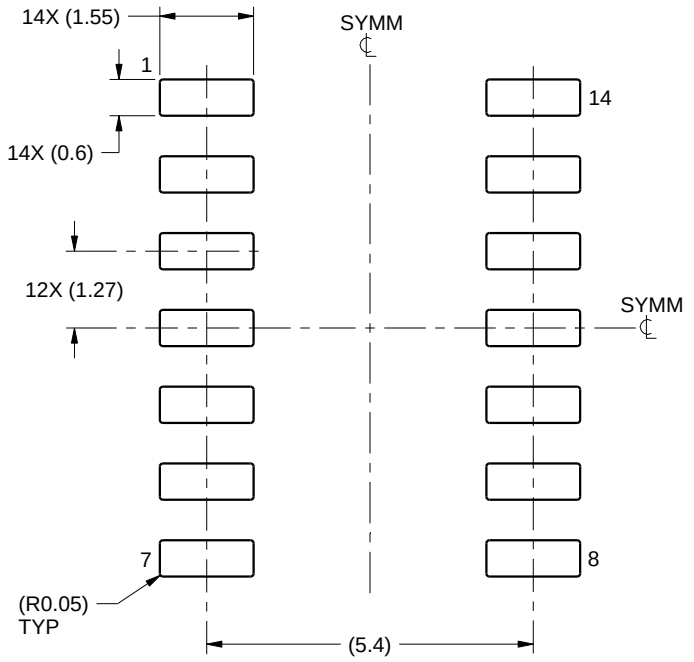

LAND PATTERN EXAMPLE
SCALE:8X

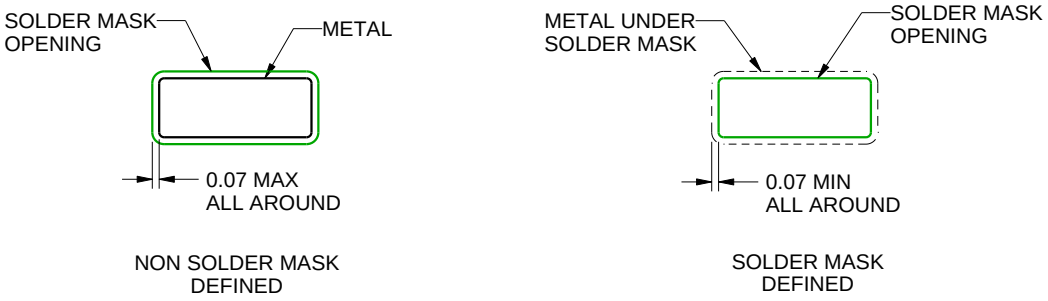

SOLDER MASK DETAILS

4220718/A 09/2016

NOTES: (continued)

6. Publication IPC-7351 may have alternate designs.
7. Solder mask tolerances between and around signal pads can vary based on board fabrication site.

EXAMPLE STENCIL DESIGN

D0014A

SOIC - 1.75 mm max height

SMALL OUTLINE INTEGRATED CIRCUIT

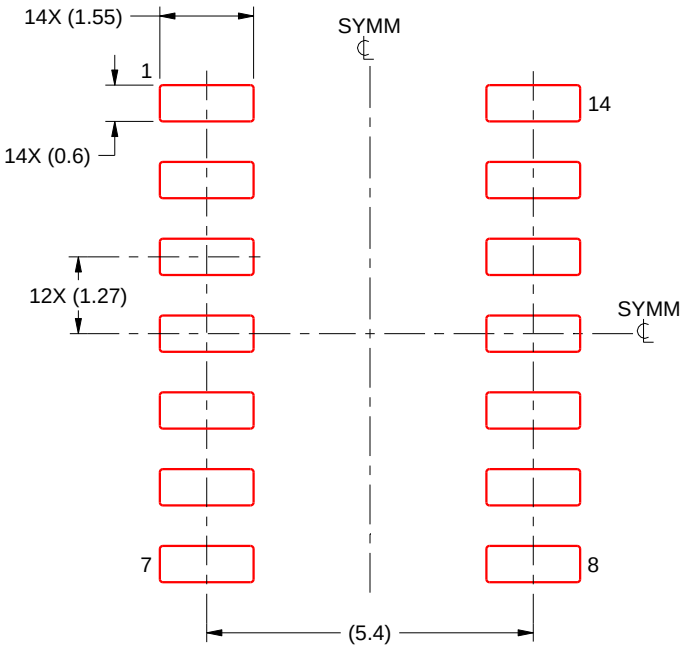

SOLDER PASTE EXAMPLE
BASED ON 0.125 mm THICK STENCIL
SCALE:8X

4220718/A 09/2016

NOTES: (continued)

8. Laser cutting apertures with trapezoidal walls and rounded corners may offer better paste release. IPC-7525 may have alternate design recommendations.
9. Board assembly site may have different recommendations for stencil design.

MECHANICAL DATA

NS (R-PDSO-G)** **PLASTIC SMALL-OUTLINE PACKAGE**

14-PINS SHOWN

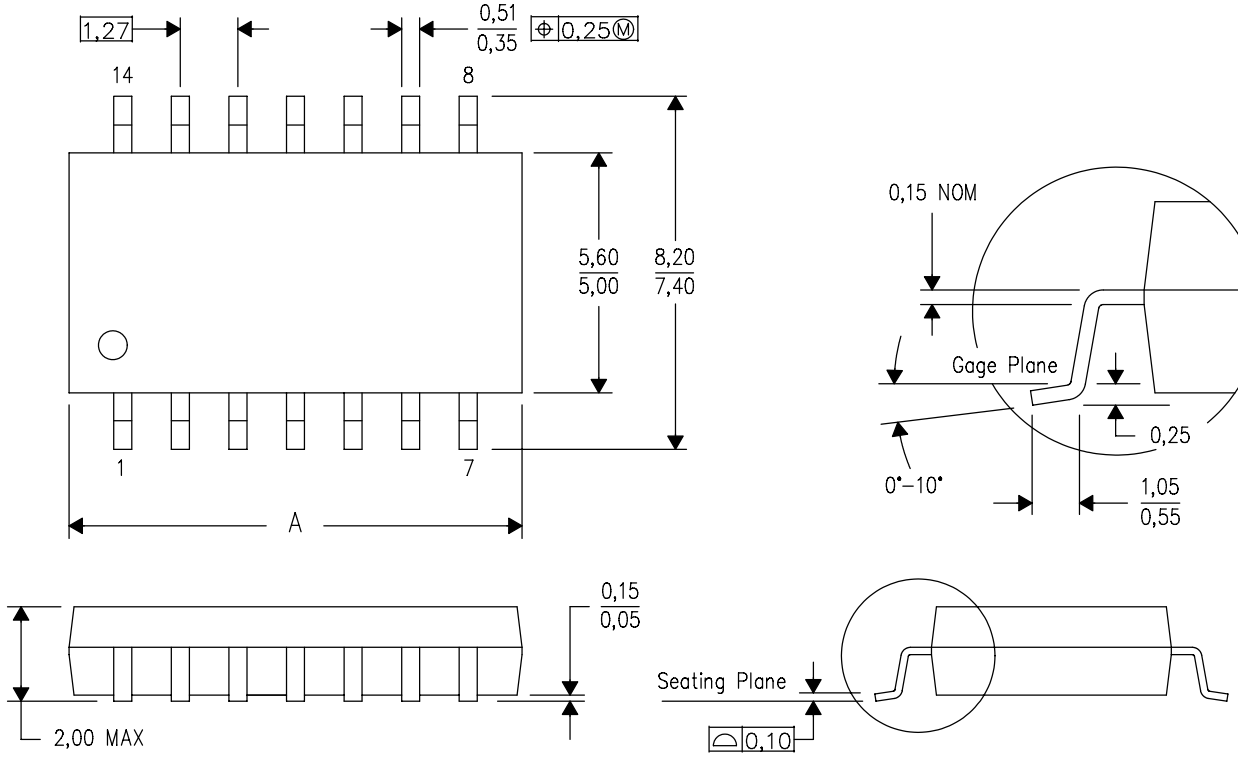

DIM \ PINS **	14	16	20	24
A MAX	10,50	10,50	12,90	15,30
A MIN	9,90	9,90	12,30	14,70

4040062/C 03/03

NOTES:
A. All linear dimensions are in millimeters.
B. This drawing is subject to change without notice.
C. Body dimensions do not include mold flash or protrusion, not to exceed 0,15.

W (R–GDFP–F14) CERAMIC DUAL FLATPACK

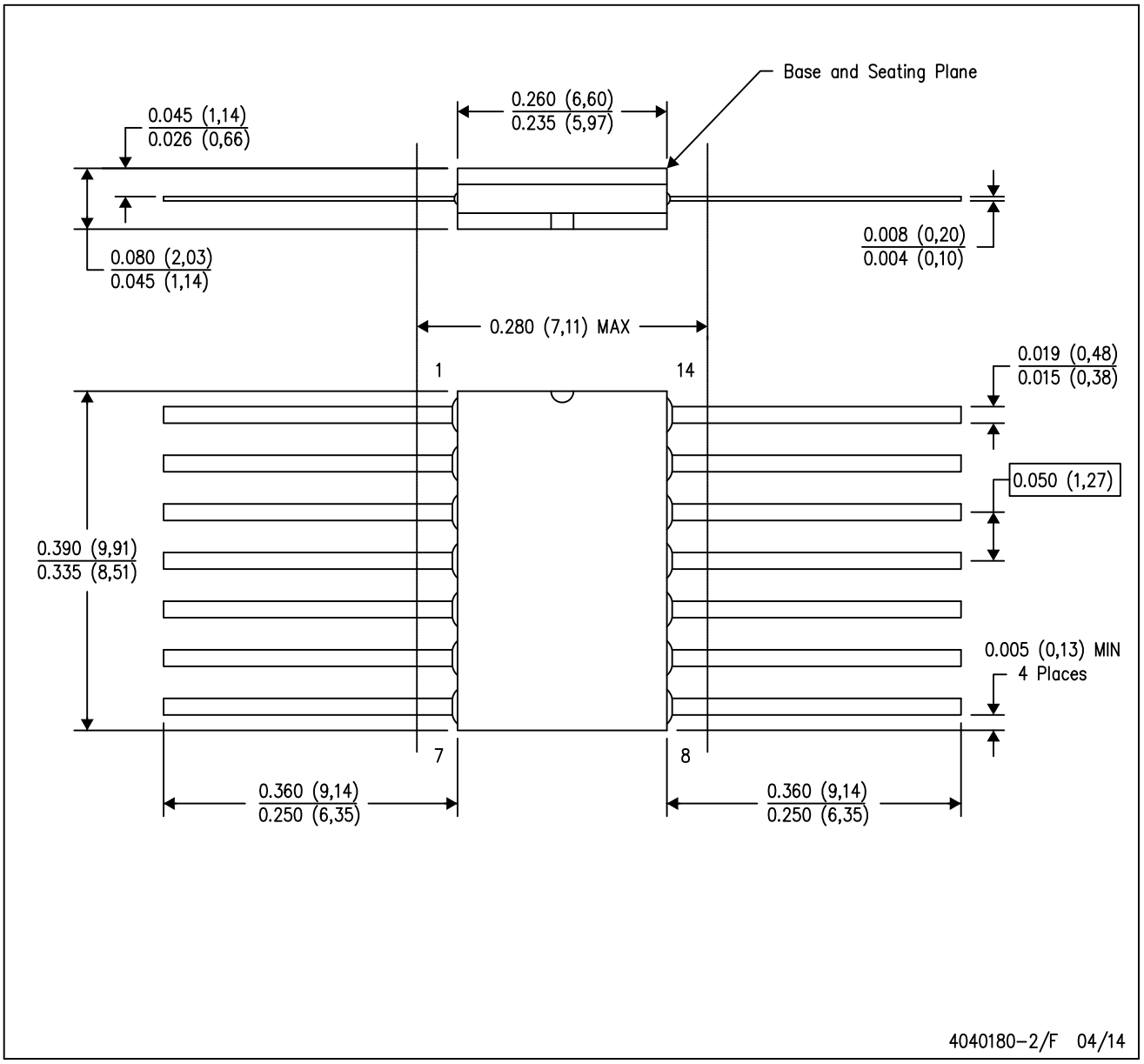

NOTES:
A. All linear dimensions are in inches (millimeters).
B. This drawing is subject to change without notice.
C. This package can be hermetically sealed with a ceramic lid using glass frit.
D. Index point is provided on cap for terminal identification only.
E. Falls within MIL STD 1835 GDFP1–F14

PACKAGE OUTLINE

DB0014A

SSOP - 2 mm max height

SMALL OUTLINE PACKAGE

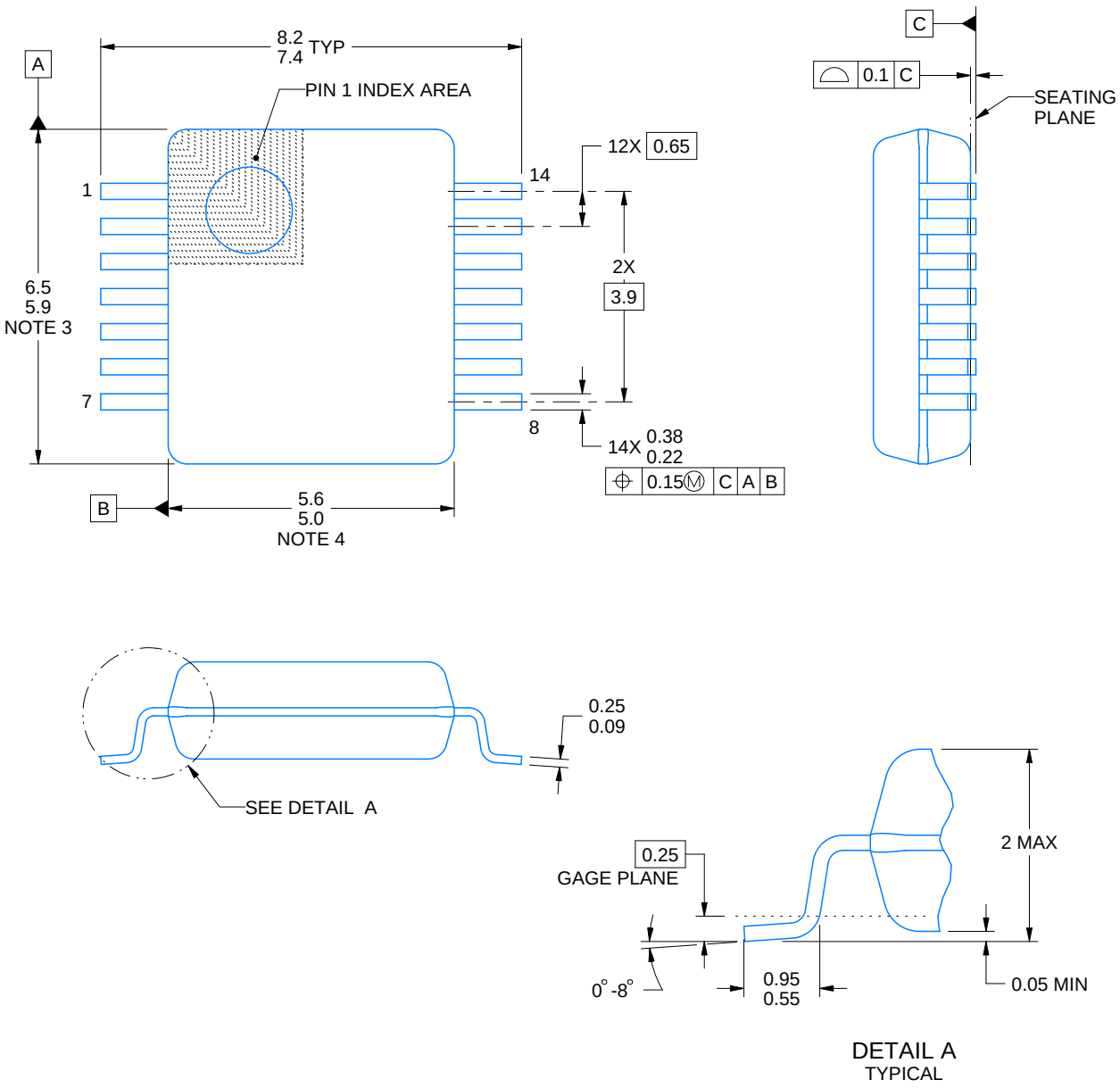

4220762/A 05/2024

NOTES:

1. All linear dimensions are in millimeters. Any dimensions in parenthesis are for reference only. Dimensioning and tolerancing per ASME Y14.5M.
2. This drawing is subject to change without notice.
3. This dimension does not include mold flash, protrusions, or gate burrs. Mold flash, protrusions, or gate burrs shall not exceed 0.15 mm per side.
4. Reference JEDEC registration MO-150.

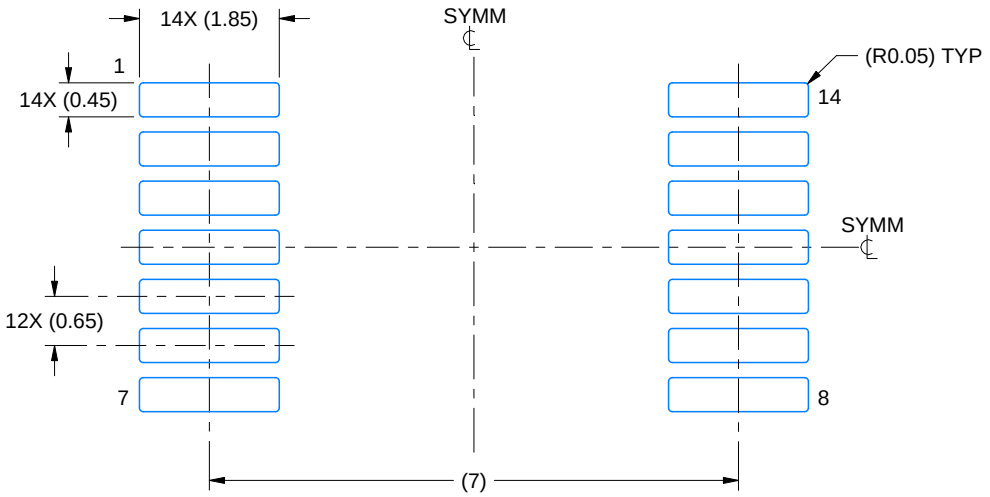

LAND PATTERN EXAMPLE
EXPOSED METAL SHOWN
SCALE: 10X

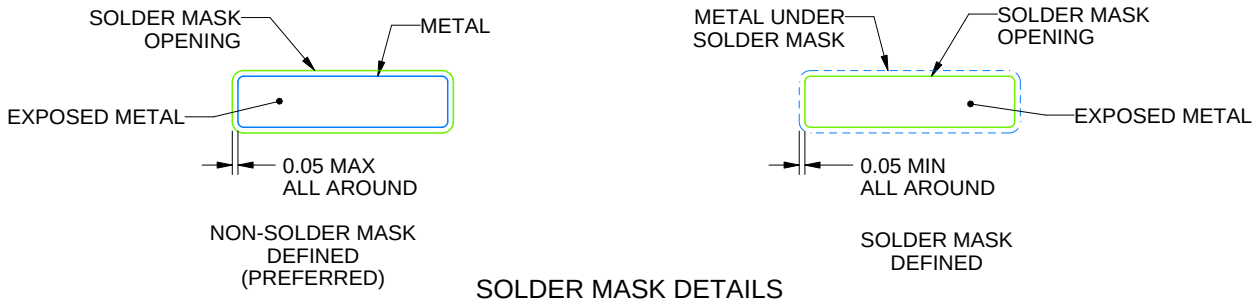

SOLDER MASK DETAILS

4220762/A 05/2024

NOTES: (continued)

5. Publication IPC-7351 may have alternate designs.
6. Solder mask tolerances between and around signal pads can vary based on board fabrication site.

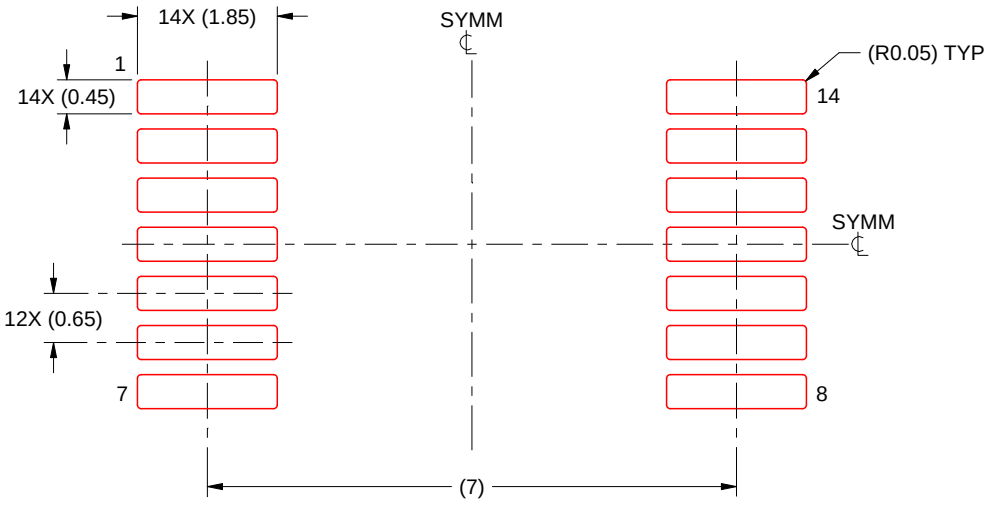

SOLDER PASTE EXAMPLE
BASED ON 0.125 mm THICK STENCIL
SCALE: 10X

4220762/A 05/2024

NOTES: (continued)

7. Laser cutting apertures with trapezoidal walls and rounded corners may offer better paste release. IPC-7525 may have alternate design recommendations.
8. Board assembly site may have different recommendations for stencil design.

GENERIC PACKAGE VIEW

FK 20

LCCC - 2.03 mm max height

8.89 x 8.89, 1.27 mm pitch

LEADLESS CERAMIC CHIP CARRIER

This image is a representation of the package family, actual package may vary.
Refer to the product data sheet for package details.

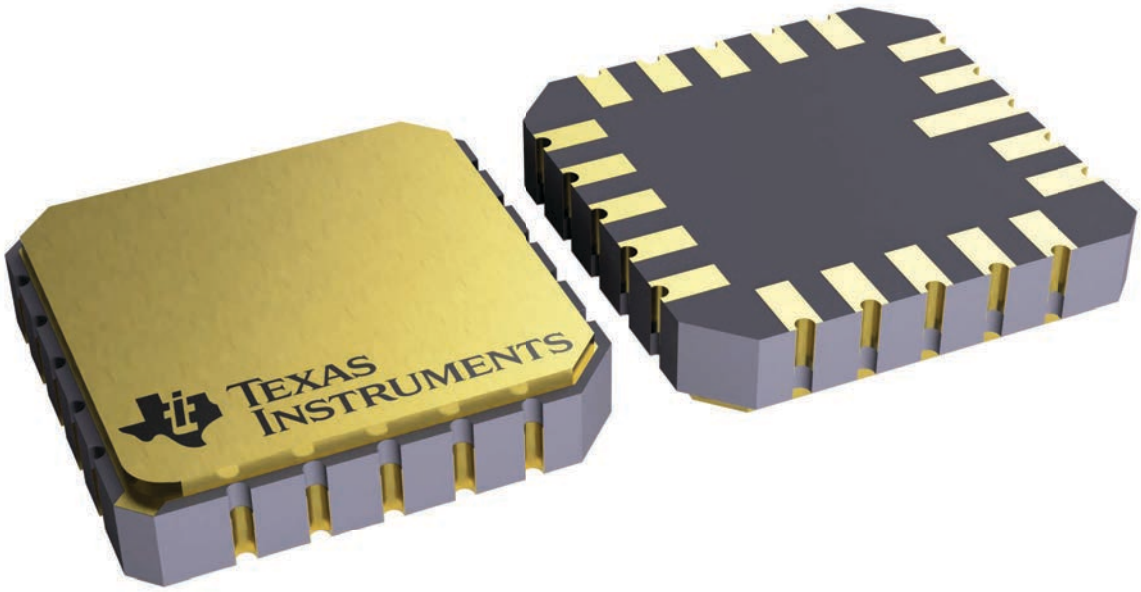

4229370VA\

GENERIC PACKAGE VIEW

J 14 CDIP - 5.08 mm max height

CERAMIC DUAL IN LINE PACKAGE

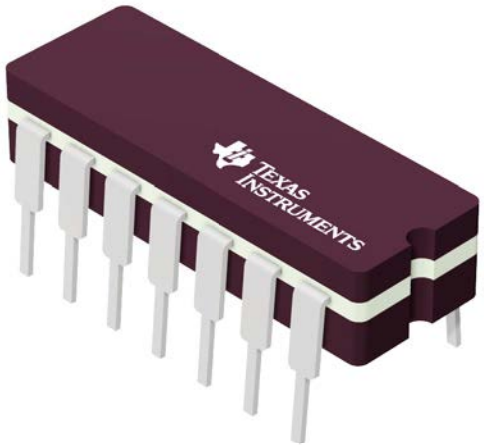

Images above are just a representation of the package family, actual package may vary.
Refer to the product data sheet for package details.

4040083-5/G



PACKAGE OUTLINE

J0014A

CDIP - 5.08 mm max height

CERAMIC DUAL IN LINE PACKAGE

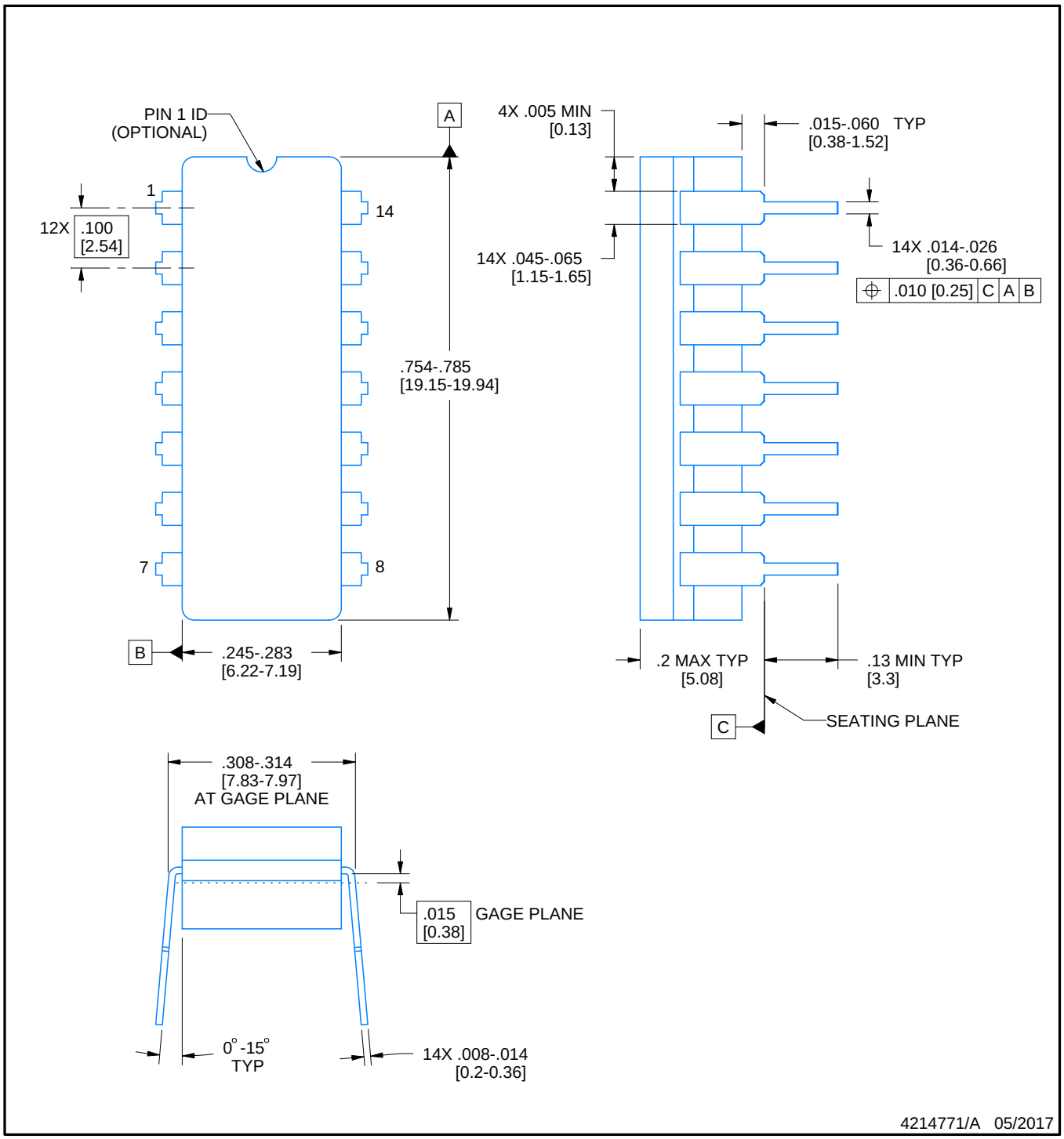

NOTES:

1. All controlling linear dimensions are in inches. Dimensions in brackets are in millimeters. Any dimension in brackets or parenthesis are for reference only. Dimensioning and tolerancing per ASME Y14.5M.
2. This drawing is subject to change without notice.
3. This package is hermitically sealed with a ceramic lid using glass frit.
4. Index point is provided on cap for terminal identification only and on press ceramic glass frit seal only.
5. Falls within MIL-STD-1835 and GDIP1-T14.

EXAMPLE BOARD LAYOUT

J0014A

CDIP - 5.08 mm max height

CERAMIC DUAL IN LINE PACKAGE

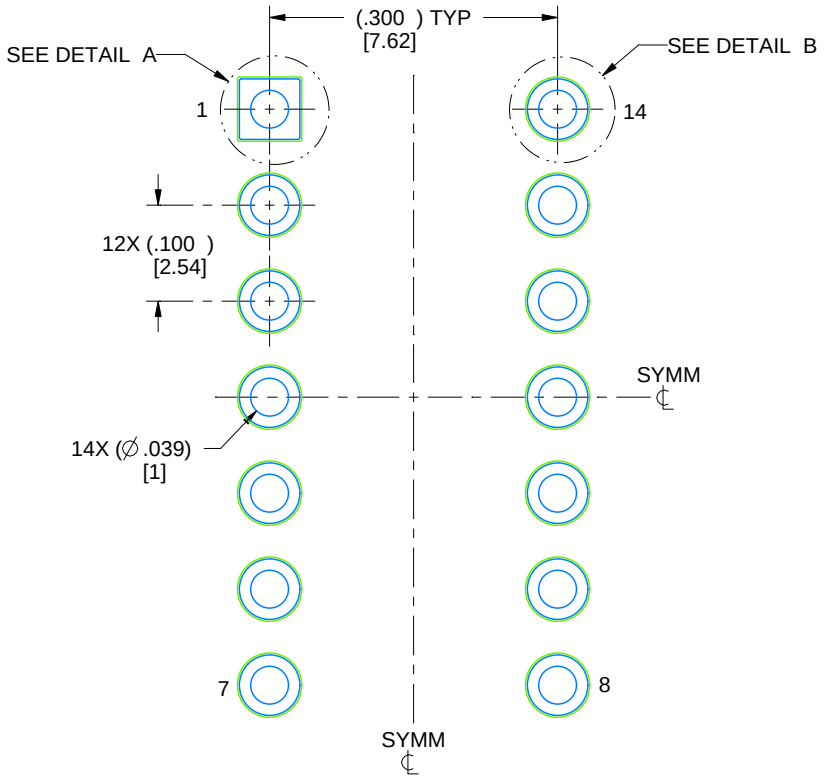

LAND PATTERN EXAMPLE
NON-SOLDER MASK DEFINED
SCALE: 5X

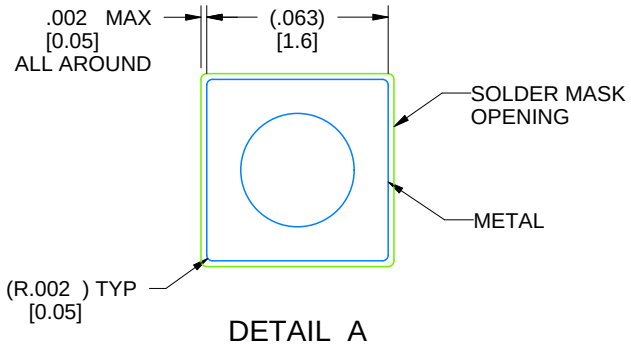

DETAIL A
SCALE: 15X

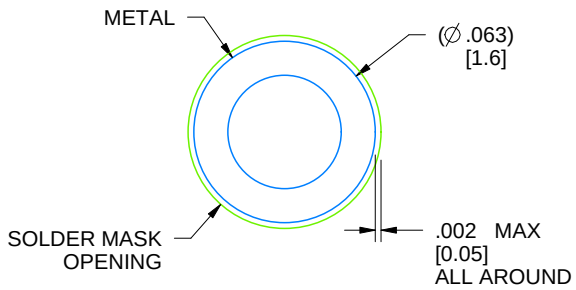

DETAIL B
13X, SCALE: 15X

4214771/A 05/2017

N (R–PDIP–T**)

PLASTIC DUAL–IN–LINE PACKAGE

16 PINS SHOWN

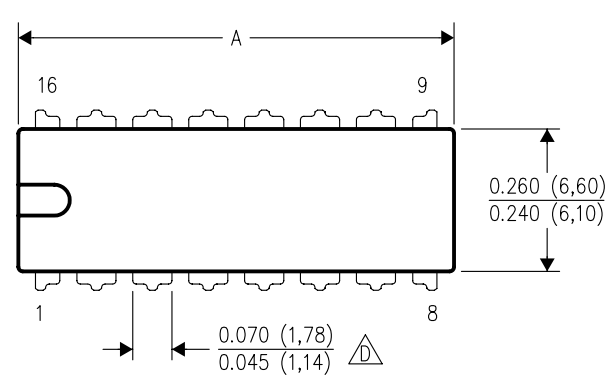

DIM \ PINS **	14	16	18	20
A MAX	0.775 (19,69)	0.775 (19,69)	0.920 (23,37)	1.060 (26,92)
A MIN	0.745 (18,92)	0.745 (18,92)	0.850 (21,59)	0.940 (23,88)
MS–001 VARIATION (C)	AA	BB	AC	AD

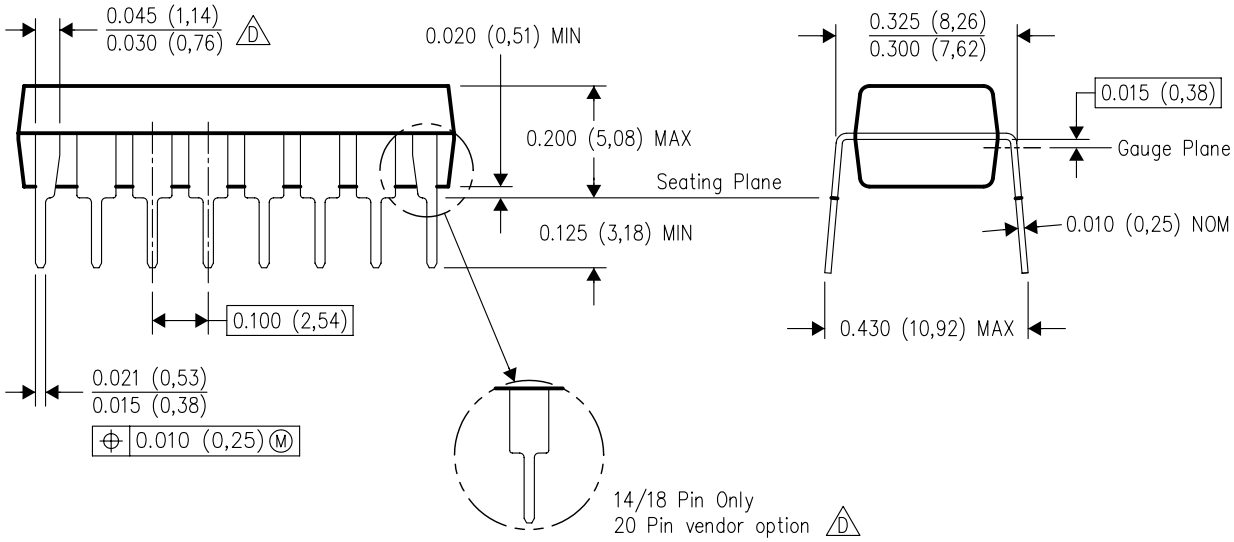

4040049/E 12/2002

NOTES:
A. All linear dimensions are in inches (millimeters).
B. This drawing is subject to change without notice.
C. Falls within JEDEC MS–001, except 18 and 20 pin minimum body length (Dim A).
D. The 20 pin end lead shoulder width is a vendor option, either half or full width.

PACKAGE OUTLINE

PW0014A

TSSOP - 1.2 mm max height

SMALL OUTLINE PACKAGE

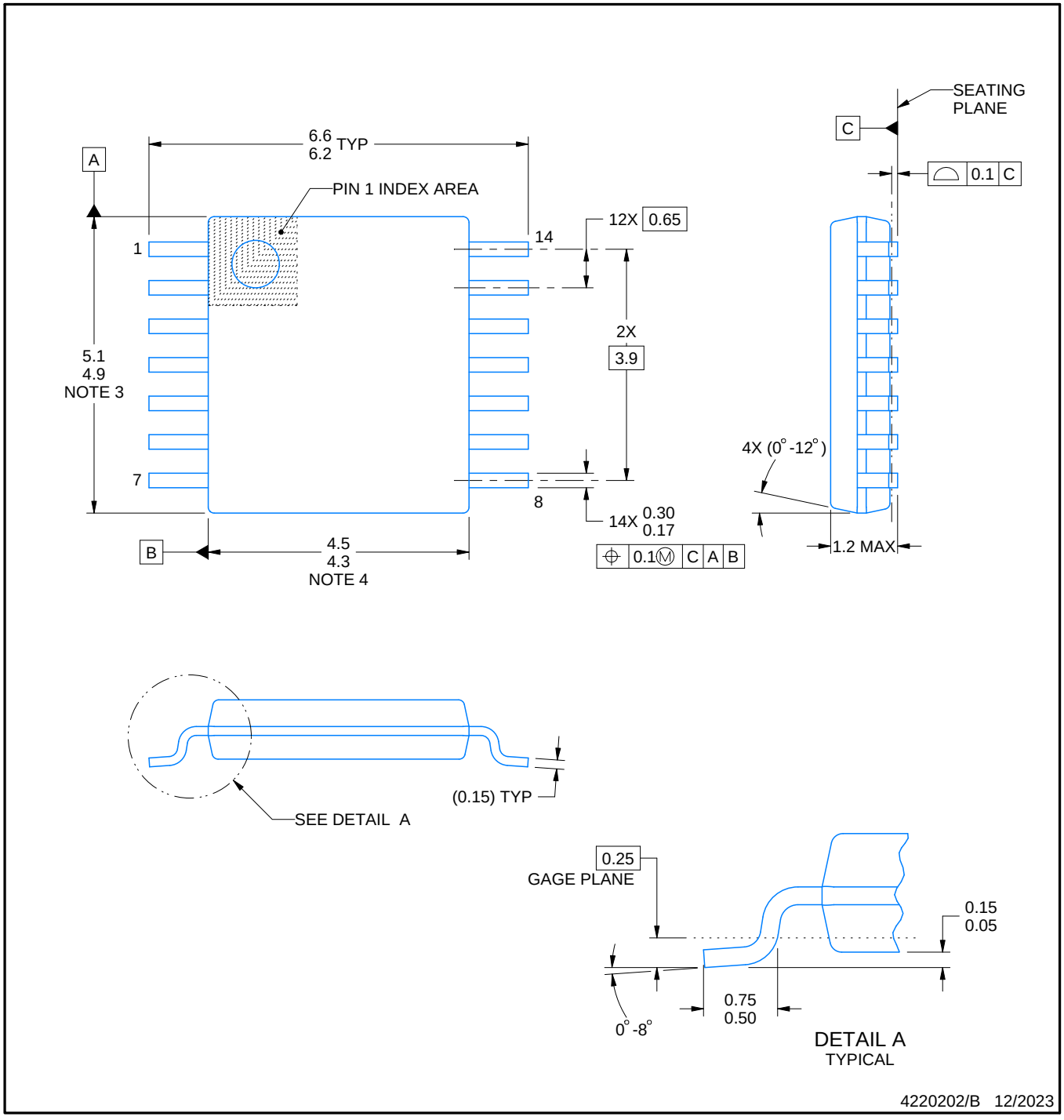

NOTES:

1. All linear dimensions are in millimeters. Any dimensions in parenthesis are for reference only. Dimensioning and tolerancing per ASME Y14.5M.
2. This drawing is subject to change without notice.
3. This dimension does not include mold flash, protrusions, or gate burrs. Mold flash, protrusions, or gate burrs shall not exceed 0.15 mm per side.
4. This dimension does not include interlead flash. Interlead flash shall not exceed 0.25 mm per side.
5. Reference JEDEC registration MO-153.

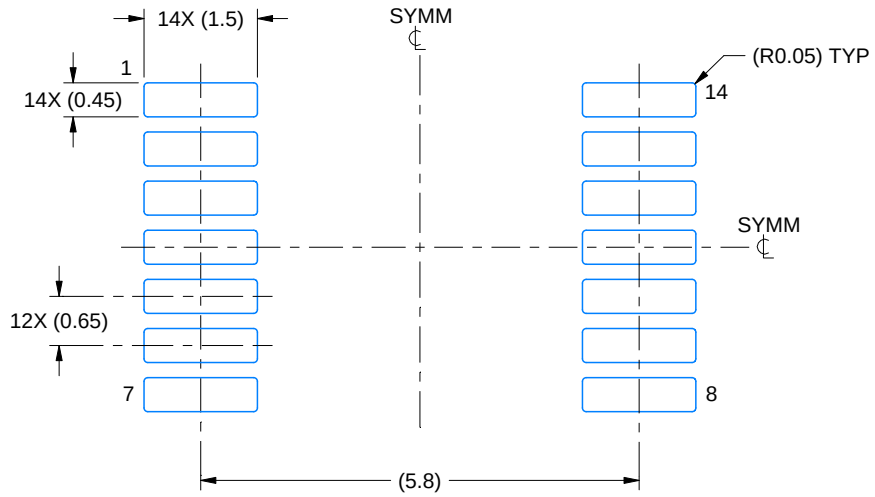

LAND PATTERN EXAMPLE
EXPOSED METAL SHOWN
SCALE: 10X

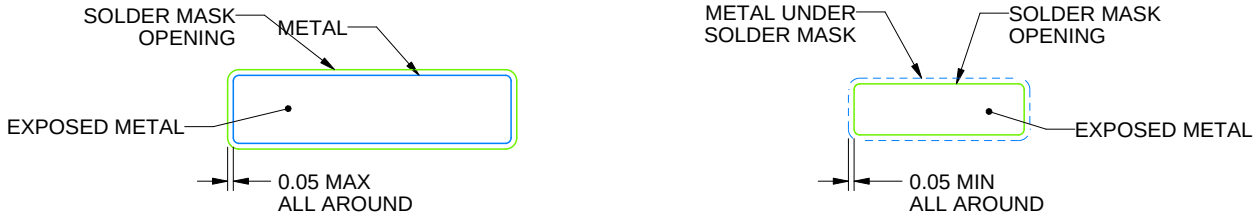

SOLDER MASK DETAILS

4220202/B 12/2023

NOTES: (continued)

6. Publication IPC-7351 may have alternate designs.
7. Solder mask tolerances between and around signal pads can vary based on board fabrication site.

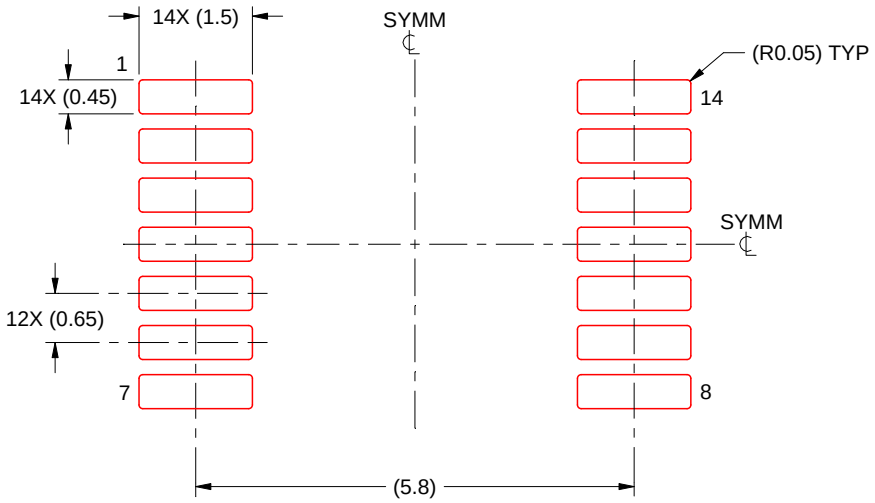

SOLDER PASTE EXAMPLE
BASED ON 0.125 mm THICK STENCIL
SCALE: 10X

4220202/B 12/2023

NOTES: (continued)

8. Laser cutting apertures with trapezoidal walls and rounded corners may offer better paste release. IPC-7525 may have alternate design recommendations.
9. Board assembly site may have different recommendations for stencil design.

重要通知和免责声明

TI“按原样”提供技术和可靠性数据（包括数据表）、设计资源（包括参考设计）、应用或其他设计建议、网络工具、安全信息和其他资源，不保证没有瑕疵且不做出任何明示或暗示的担保，包括但不限于对适销性、与某特定用途的适用性或不侵犯任何第三方知识产权的暗示担保。

这些资源可供使用 TI 产品进行设计的熟练开发人员使用。您将自行承担以下全部责任：(1) 针对您的应用选择合适的 TI 产品，(2) 设计、验证并测试您的应用，(3) 确保您的应用满足相应标准以及任何其他安全、安保法规或其他要求。

这些资源如有变更，恕不另行通知。TI 授权您仅可将这些资源用于研发本资源所述的 TI 产品的相关应用。严禁以其他方式对这些资源进行复制或展示。您无权使用任何其他 TI 知识产权或任何第三方知识产权。对于因您对这些资源的使用而对 TI 及其代表造成的任何索赔、损害、成本、损失和债务，您将全额赔偿，TI 对此概不负责。

TI 提供的产品受 TI 销售条款)、TI 通用质量指南 或 ti.com 上其他适用条款或 TI 产品随附的其他适用条款的约束。TI 提供这些资源并不会扩展或以其他方式更改 TI 针对 TI 产品发布的适用的担保或担保免责声明。 除非德州仪器 (TI) 明确将某产品指定为定制产品或客户特定产品，否则其产品均为按确定价格收入目录的标准通用器件。

TI 反对并拒绝您可能提出的任何其他或不同的条款。

版权所有 © 2026，德州仪器 (TI) 公司

最后更新日期：2025 年 10 月