SN74LV540A 具有三态输出的八路缓冲器/驱动器

1 特性

- V_{CC} 工作范围为 2V 至 5.5V
- 5V 时 t_{pd} 最大值为 8.5ns
- V_{CC} = 3.3V、T_A = 25°C 时，V_{OLP}（输出接地反弹）典型值小于 0.8V
- V_{CC} = 3.3V、T_A = 25°C 时，V_{OHV}（输出 V_{OH} 下冲）典型值大于 2.3 V
- 所有端口上均支持以混合模式电压运行
- I_{off} 支持局部断电模式运行
- 闩锁性能超过 250mA，符合 JESD 17 规范

2 应用

- 测试和测量
- 工业运输
- 患者监护
- 无线基础设施
- 网络交换机
- 汽车信息娱乐系统

3 说明

SN74LV540A 器件是一款八路缓冲器/驱动器，可在 2V 至 5.5V V_{CC} 电压下运行。

此器件非常适合用于驱动总线或缓冲存储器地址寄存器。它在封装的相对两侧具有输入端和输出端，有助于印刷电路板布局布线。

封装信息

器件型号	封装(1)	封装尺寸（标称值）
SN74LV540A	RGY（VQFN，20）	4.50mm x 3.50mm
	DB（SSOP，20）	7.50 mm x 5.30 mm
	PW（TSSOP，20）	6.50mm x 4.40mm
	DGV（TVSOP，20）	5.00mm x 4.40mm
	DW（SOIC，20）	12.80 x 7.50mm
	NS（SOP，20）	12.6 mm x 5.3 mm

(1) 有关所有的可用封装，请参阅数据表末尾的可订购产品附录。

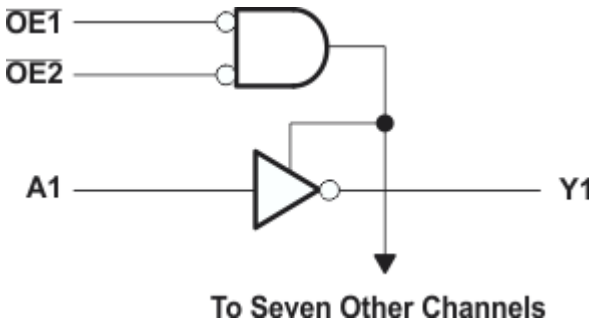

图 3-1. 简化原理图

本文档旨在为方便起见，提供有关 TI 产品中文版本的信息，以确认产品的概要。有关适用的官方英文版本的最新信息，请访问 www.ti.com，其内容始终优先。TI 不保证翻译的准确性和有效性。在实际设计之前，请务必参考最新版本的英文版本。

Table of Contents

1 特性 1
2 应用 1
3 说明 1
4 Revision History 2
5 Pin Configuration and Functions 3
6 Specifications 4
6.1 Absolute Maximum Ratings 4
6.2 ESD Ratings 4
6.3 Recommended Operating Conditions 5
6.4 Thermal Information 5
6.5 Electrical Characteristics 6
6.6 Switching Characteristics, V_{CC} = 2.5 V ± 0.2 V 6
6.7 Switching Characteristics, V_{CC} = 3.3 V ± 0.3 V 6
6.8 Switching Characteristics, V_{CC} = 5 V ± 0.5 V 7
6.9 Noise Characteristics 7
6.10 Operating Characteristics 7
6.11 Typical Characteristics 7
7 Parameter Measurement Information 8
8 Detailed Description 9
8.1 Overview 9
8.2 Functional Block Diagram 9
8.3 Feature Description 9
8.4 Device Functional Modes 9
9 Application and Implementation 10
9.1 Application Information 10
9.2 Typical Application 10
9.3 Power Supply Recommendations 11
9.4 Layout 11
10 Device and Documentation Support 12
10.1 Documentation Support 12
10.2 接收文档更新通知 12
10.3 支持资源 12
10.4 Trademarks 12
10.5 静电放电警告 12
10.6 术语表 12
11 Mechanical, Packaging, and Orderable Information 12

4 Revision History

Changes from Revision I (December 2014) to Revision J (March 2023) **Page**

- 根据当前标准更新了文档的结构布局，更新了*特性* 部分并向*封装信息* 表中添加了 NS 封装 1
- Added ± to values in *ESD Ratings* section 4
- Updated thermal values for PW package from R θ JA = 102.8 to 128.2, R θ JC(top) = 36.8 to 70.5, R θ JB = 53.8 to 79.3, Ψ JT =2.5 to 23.4, Ψ JB = 53.3 to 78.9, all values in °C/W 5

Changes from Revision H (April 2005) to Revision I (December 2014) **Page**

- 添加了*应用*、*器件信息* 表、*引脚功能* 表、*ESD 等级* 表、*热性能信息* 表、*典型特性*、*特性说明* 部分、*器件功能模式*、*应用和实施* 部分、*电源相关建议* 部分、*布局* 部分、*器件和文档支持* 部分以及*机械*、*封装和可订购信息* 部分 1
- 删除了*订购信息* 表 1
- Changed MAX operating temperature to 125°C in *Recommended Operating Conditions* table. 5

Copyright © 2023 Texas Instruments Incorporated

5 Pin Configuration and Functions

SN74LV540A . . . DB, DGV, DW, NS, OR PW PACKAGE
(TOP VIEW)

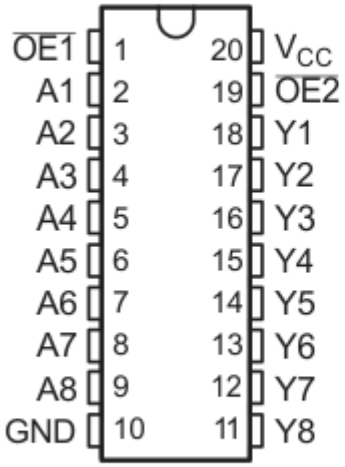

SN74LV540A . . . RGY PACKAGE
(TOP VIEW)

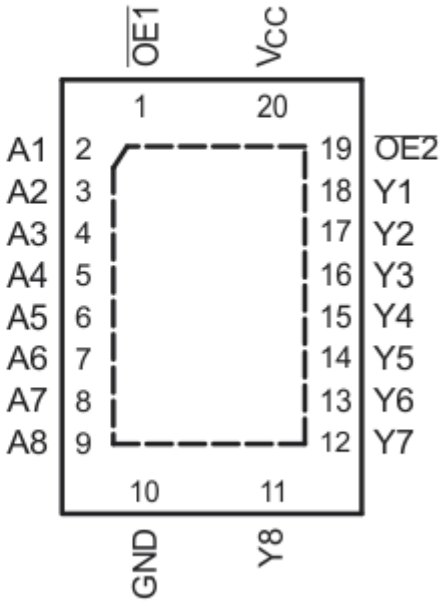

表 5-1. Pin Functions

PIN		TYPE	DESCRIPTION
NO.	NAME		
1	$\overline{OE1}$	I	Output Enable 1
2	A1	I	A1 Input
3	A2	I	A2 Input
4	A3	I	A3 Input
5	A4	I	A4 Input
6	A5	I	A5 Input
7	A6	I	A6 Input
8	A7	I	A7 Input
9	A8	I	A8 Input
10	GND	—	Ground Pin
11	Y8	O	Y8 Output
12	Y7	O	Y7 Output
13	Y6	O	Y6 Output
14	Y5	O	Y5 Output
15	Y4	O	Y4 Output
16	Y3	O	Y3 Output
17	Y2	O	Y2 Output
18	Y1	O	Y1 Output
19	$\overline{OE2}$	I	Output Enable 2
20	V_{CC}	—	Power Pin

Copyright © 2023 Texas Instruments Incorporated

6 Specifications

6.1 Absolute Maximum Ratings

over operating free-air temperature range (unless otherwise noted)(1)

			MIN	MAX	UNIT
V_{CC}	Supply voltage range		– 0.5	7	V
V_I	Input voltage range(2)		– 0.5	7	V
V_O	Voltage range applied to any output in the high-impedance or power-off state(2)		– 0.5	7	V
V_O	Output voltage range applied in the high or low state(2) (3)		– 0.5	V_{CC} + 0.5	V
I_{IK}	Input clamp current	V_I < 0		– 20	mA
I_{OK}	Output clamp current	V_O < 0		– 50	mA
I_O	Continuous output current	V_O = 0 to V_{CC}		±35	mA
	Continuous current through V_{CC} or GND			±70	mA
T_{stg}	Storage temperature range		– 65	150	°C

(1) Stresses beyond those listed under *Absolute Maximum Ratings* may cause permanent damage to the device. These are stress ratings only, and functional operation of the device at these or any other conditions beyond those indicated under *Recommended Operating Conditions* is not implied. Exposure to absolute-maximum-rated conditions for extended periods may affect device reliability.
(2) The input and output negative-voltage ratings may be exceeded if the input and output current ratings are observed.
(3) This value is limited to 5.5-V maximum.

6.2 ESD Ratings

			VALUE	UNIT
$V_{(ESD)}$	Electrostatic discharge	Human body model (HBM), per ANSI/ESDA/JEDEC JS-001, all pins(1)	±2000	V
		Charged device model (CDM), per JEDEC specification JESD22-C101, all pins(2)	±2000	
		Machine Model (MM)	±200	

(1) JEDEC document JEP155 states that 500-V HBM allows safe manufacturing with a standard ESD control process.
(2) JEDEC document JEP157 states that 250-V CDM allows safe manufacturing with a standard ESD control process.

Copyright © 2023 Texas Instruments Incorporated

6.3 Recommended Operating Conditions

over operating free-air temperature range (unless otherwise noted)(1)

			SN74LV540A		UNIT
			MIN	MAX	
V_{CC}	Supply voltage		2	5.5	V
V_{IH}	High-level input voltage	V_{CC} = 2 V	1.5		V
		V_{CC} = 2.3 V to 2.7 V	V_{CC} × 0.7		
		V_{CC} = 3 V to 3.6 V	V_{CC} × 0.7		
		V_{CC} = 4.5 V to 5.5 V	V_{CC} × 0.7		
V_{IL}	Low-level input voltage	V_{CC} = 2 V		0.5	V
		V_{CC} = 2.3 V to 2.7 V		V_{CC} × 0.3	
		V_{CC} = 3 V to 3.6 V		V_{CC} × 0.3	
		V_{CC} = 4.5 V to 5.5 V		V_{CC} × 0.3	
V_I	Input voltage		0	5.5	V
V_O	Output voltage	High or low state	0	V_{CC}	V
		3-state	0	5.5	
I_{OH}	High-level output current	V_{CC} = 2 V		– 50	μA
		V_{CC} = 2.3 V to 2.7 V		– 2	mA
		V_{CC} = 3 V to 3.6 V		– 8	
		V_{CC} = 4.5 V to 5.5 V		– 16	
I_{OL}	Low-level output current	V_{CC} = 2 V		50	μA
		V_{CC} = 2.3 V to 2.7 V		2	mA
		V_{CC} = 3 V to 3.6 V		8	
		V_{CC} = 4.5 V to 5.5 V		16	
$\Delta t/\Delta v$	Input transition rise or fall rate	V_{CC} = 2.3 V to 2.7 V		200	ns/V
		V_{CC} = 3 V to 3.6 V		100	
		V_{CC} = 4.5 V to 5.5 V		20	
T_A	Operating free-air temperature		– 40	125	°C

(1) All unused inputs of the device must be held at V_{CC} or GND to ensure proper device operation. Refer to the TI application report, *Implications of Slow or Floating CMOS Inputs* (SCBA004).

6.4 Thermal Information

THERMAL METRIC(1)		SN74LV540A						UNIT
		DB	DGV	DW	NS	PW	RGY	
		20 PINS						
$R_{\theta JA}$	Junction-to-ambient thermal resistance	96.0	116.1	79.8	77.1	128.2	35.1	°C/W
$R_{\theta JC(top)}$	Junction-to-case (top) thermal resistance	57.7	31.3	45.8	43.6	70.5	43.3	
$R_{\theta JB}$	Junction-to-board thermal resistance	51.2	57.6	47.4	44.6	79.3	12.9	
ψ_{JT}	Junction-to-top characterization parameter	19.4	1.0	18.5	17.2	23.4	0.9	
ψ_{JB}	Junction-to-board characterization parameter	50.8	56.9	47.0	44.2	78.9	12.9	
$R_{\theta JC(bot)}$	Junction-to-case (bottom) thermal resistance	N/A	N/A	N/A	N/A	N/A	7.9	

(1) For more information about traditional and new thermal metrics, see the *IC Package Thermal Metrics* application report (SPRA953).

Copyright © 2023 Texas Instruments Incorporated

6.5 Electrical Characteristics

over recommended operating free-air temperature range (unless otherwise noted)

PARAMETER	TEST CONDITIONS	V_{CC}	T_A = 25°C			−40°C to 85°C		−40°C to 125°C		UNIT
			MIN	TYP	MAX	MIN	MAX	MIN	MAX	
V_{OH}	I_{OH} = −50 µA	2 V to 5.5 V	V_{CC} − 0.1			V_{CC} − 0.1		V_{CC} − 0.1		V
	I_{OH} = −2 mA	2.3 V	2			2		2		
	I_{OH} = −8 mA	3 V	2.48			2.48		2.48		
	I_{OH} = −16 mA	4.5 V	3.8			3.8		3.8		
V_{OL}	I_{OL} = 50 µA	2 V to 5.5 V			0.1		0.1		0.1	V
	I_{OL} = 2 mA	2.3 V			0.4		0.4		0.4	
	I_{OL} = 8 mA	3 V			0.44		0.44		0.44	
	I_{OL} = 16 mA	4.5 V			0.55		0.55		0.55	
I_I	V_I = 5.5 V or GND	0 to 5.5 V			±1		±1		±1	µA
I_{OZ}	V_O = V_{CC} or GND	5.5 V			±5		±5		±5	µA
I_{CC}	V_I = V_{CC} or GND, I_O = 0	5.5 V			20		20		20	µA
I_{off}	V_I or V_O = 0 to 5.5 V	0			5		5		5	µA
C_i	V_I = V_{CC} or GND	3.3 V		2.5						pF
		5 V		2.5						

6.6 Switching Characteristics, V_{CC} = 2.5 V ± 0.2 V

over recommended operating free-air temperature range (unless otherwise noted) (see Load Circuit and Voltage Waveforms)

PARAMETER	FROM (INPUT)	TO (OUTPUT)	LOAD CAPACITANCE	T_A = 25°C			−40°C to 85°C		−40°C to 125°C		UNIT
				MIN	TYP	MAX	MIN	MAX	MIN	MAX	
t_{pd}	A	Y	C_L = 15 pF		5.6(1)	12(1)	1	14.5	1	16	ns
t_{en}	$\overline{OE}$	Y			7.8(1)	17.4(1)	1	21	1	22.5	
t_{dis}	$\overline{OE}$	Y			5.7(1)	16(1)	1	19	1	20	
t_{pd}	A	Y	C_L = 50 pF		7.9	16.8	1	18.5	1	20	ns
t_{en}	$\overline{OE}$	Y			10.1	22.2	1	25.5	1	27	
t_{dis}	$\overline{OE}$	Y			8.1	22.3	1	25.5	1	26.5	
$t_{sk(o)}$						2		2		3	

(1) On products compliant to MIL-PRF-38535, this parameter is not production tested.

6.7 Switching Characteristics, V_{CC} = 3.3 V ± 0.3 V

over recommended operating free-air temperature range (unless otherwise noted) (see Load Circuit and Voltage Waveforms)

PARAMETER	FROM (INPUT)	TO (OUTPUT)	LOAD CAPACITANCE	T_A = 25°C			−40°C to 85°C		−40°C to 125°C		UNIT
				MIN	TYP	MAX	MIN	MAX	MIN	MAX	
t_{pd}	A	Y	C_L = 15 pF		4.1(1)	7(1)	1	8.5	1	9.5	ns
t_{en}	$\overline{OE}$	Y			5.6(1)	10.5(1)	1	12.5	1	14	
t_{dis}	$\overline{OE}$	Y			4.2(1)	10.5(1)	1	12.5	1	13.5	
t_{pd}	A	Y	C_L = 50 pF		5.8	10.5	1	12	1	13	ns
t_{en}	$\overline{OE}$	Y			7.3	14	1	16	1	17.5	
t_{dis}	$\overline{OE}$	Y			5.8	15.4	1	17.5	1	18.5	
$t_{sk(o)}$						1.5		1.5		2	

(1) On products compliant to MIL-PRF-38535, this parameter is not production tested.

Copyright © 2023 Texas Instruments Incorporated

6.8 Switching Characteristics, V_{CC} = 5 V ± 0.5 V

over recommended operating free-air temperature range (unless otherwise noted) (see Load Circuit and Voltage Waveforms)

PARAMETER	FROM (INPUT)	TO (OUTPUT)	LOAD CAPACITANCE	T_A = 25°C			−40°C to 85°C		−40°C to 125°C		UNIT
				MIN	TYP	MAX	MIN	MAX	MIN	MAX	
t_{pd}	A	Y	C_L = 15 pF		3[1]	5[1]	1	6	1	7	ns
t_{en}	$\overline{OE}$	Y			4.1[1]	7.2[1]	1	8.5	1		
t_{dis}	$\overline{OE}$	Y			2.9[1]	7[1]	1	8	1	9	
t_{pd}	A	Y	C_L = 50 pF		4.2	7	1	8	1	9	ns
t_{en}	$\overline{OE}$	Y			5.3	9.2	1	10.5	1	11.5	
t_{dis}	$\overline{OE}$	Y			3.5	8.8	1	10	1	11	
$t_{sk(o)}$						1		1		1.5	

(1) On products compliant to MIL-PRF-38535, this parameter is not production tested.

6.9 Noise Characteristics

V_{CC} = 3.3 V, C_L = 50 pF, T_A = 25°C

PARAMETER[1]		SN74LV540A			UNIT
		MIN	TYP	MAX	
$V_{OL(P)}$	Quiet output, maximum dynamic V_{OL}		0.5	0.8	V
$V_{OL(V)}$	Quiet output, minimum dynamic V_{OL}		−0.3	−0.8	V
$V_{OH(V)}$	Quiet output, minimum dynamic V_{OH}		3		V
$V_{IH(D)}$	High-level dynamic input voltage	2.3			V
$V_{IL(D)}$	Low-level dynamic input voltage			0.97	V

(1) Characteristics are for surface-mount packages only.

6.10 Operating Characteristics

T_A = 25°C

PARAMETER			TEST CONDITIONS		V_{CC}	TYP	UNIT
C_{pd}	Power dissipation capacitance	Outputs enabled	C_L = 50 pF,	f = 10 MHz	3.3 V	10	pF
		Outputs enabled			5 V	11	

6.11 Typical Characteristics

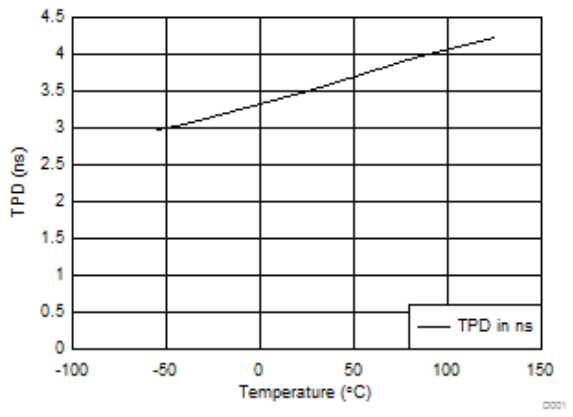

图 6-1. TPD vs Temperature

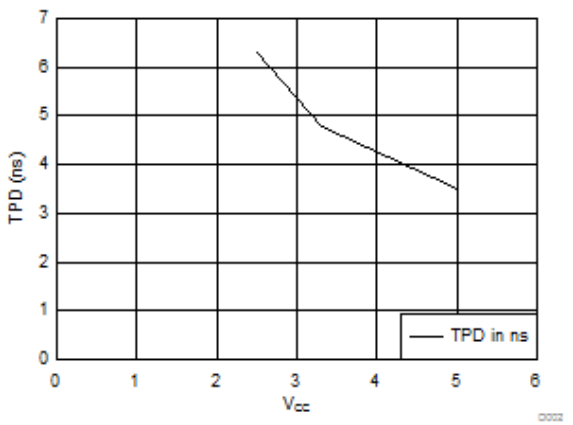

图 6-2. TPD vs V_{CC} at 25°C

Copyright © 2023 Texas Instruments Incorporated

7 Parameter Measurement Information

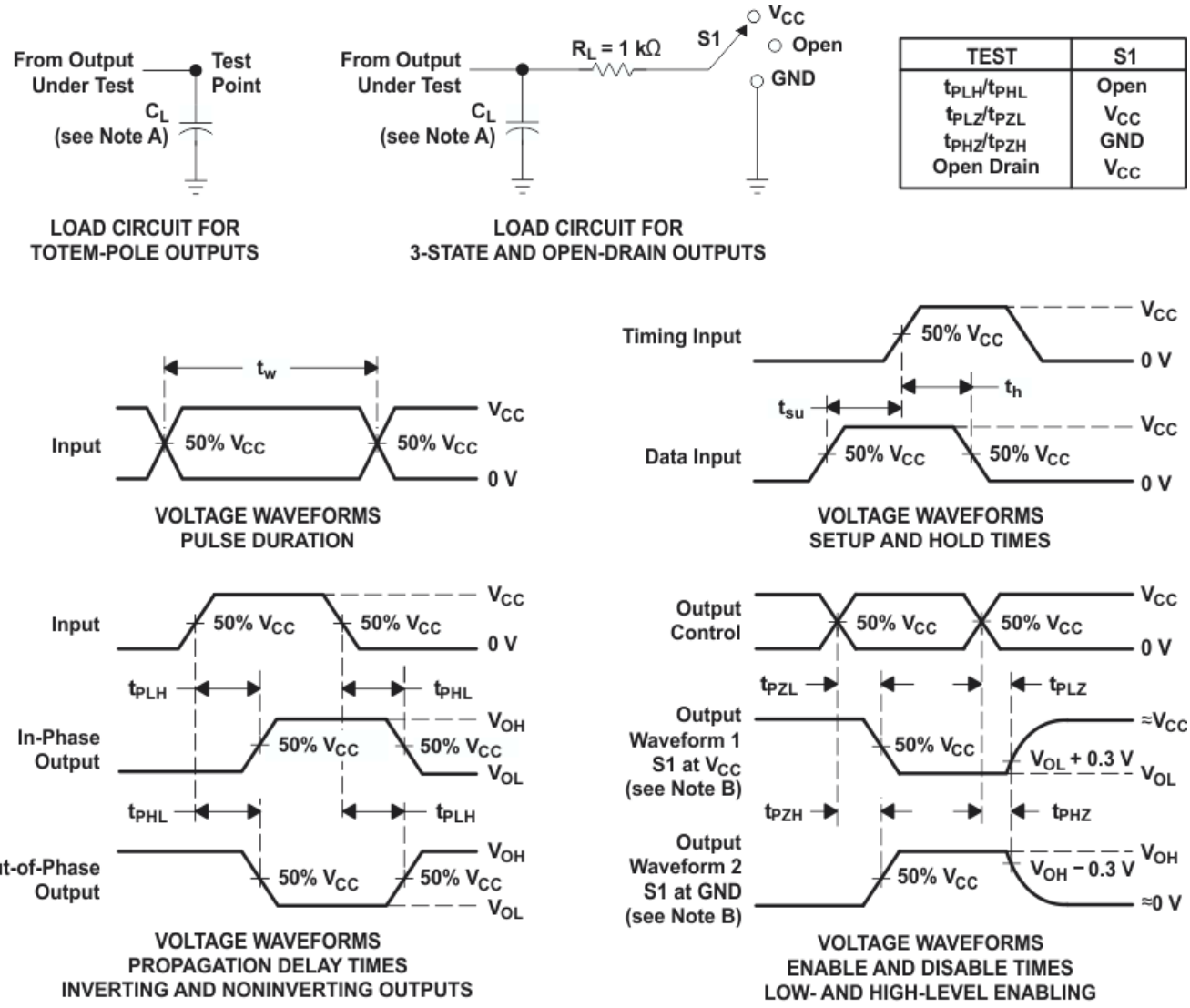

NOTES:
A. C_L includes probe and jig capacitance.
B. Waveform 1 is for an output with internal conditions such that the output is low, except when disabled by the output control. Waveform 2 is for an output with internal conditions such that the output is high, except when disabled by the output control.
C. All input pulses are supplied by generators having the following characteristics: PRR ≤ 1 MHz, Z_O = 50 Ω, t_r ≤ 3 ns, t_f ≤ 3 ns.
D. The outputs are measured one at a time, with one input transition per measurement.
E. t_{PLZ} and t_{PHZ} are the same as t_{dis}.
F. t_{PZL} and t_{PZH} are the same as t_{en}.
G. t_{PHL} and t_{PLH} are the same as t_{pd}.
H. All parameters and waveforms are not applicable to all devices.

图 7-1. Load Circuit and Voltage Waveforms

Copyright © 2023 Texas Instruments Incorporated

8 Detailed Description

8.1 Overview

The SN74LV540A device is an octal buffer/driver designed for 2 V to 5.5 V V_{CC} operation.

This device is ideal for driving bus lines or buffer memory address registers. It features inputs and outputs on opposite sides of the package to facilitate printed circuit board layout.

The 3-state control gate is a two-input AND gate with active-low inputs so that, if either output enable ($\overline{OE1}$ or $\overline{OE2}$) input is high, all corresponding outputs are in the high-impedance state. The outputs provide inverted data when they are not in the high-impedance state.

To ensure the high-impedance state during power up or power down, $\overline{OE}$ should be tied to V_{CC} through a pull-up resistor; the minimum value of the resistor is determined by the current-sinking capability of the driver.

8.2 Functional Block Diagram

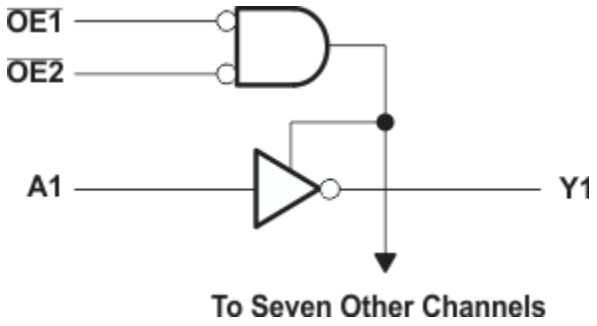

8.3 Feature Description

- Wide operating voltage range
  - Operates from 2 V to 5.5 V
- Allows down-voltage translation
  - Inputs accept voltages to 5.5 V
- Slow edges reduce output ringing
- I_{off} feature
  - Allows voltages on the inputs and outputs when V_{CC} is 0 V

8.4 Device Functional Modes

表 8-1. Function Table (Each Buffer/Driver)

INPUTS			OUTPUT
$\overline{OE1}$	$\overline{OE2}$	A	Y
L	L	L	H
L	L	H	L
H	X	X	Z
X	H	X	Z

9 Application and Implementation

备注

以下应用部分中的信息不属于 TI 器件规格的范围，TI 不担保其准确性和完整性。TI 的客 户应负责确定器件是否适用于其应用。客户应验证并测试其设计，以确保系统功能。

9.1 Application Information

The SN74LV540A is a low-drive CMOS device that can be used for a multitude of bus interface type applications where output ringing is a concern. The low drive and slow edge rates will minimize overshoot and undershoot on the outputs. The inputs are tolerant to 5.5 V at any valid V_{CC}. This feature makes it Ideal for translating down to the V_{CC} level. 图 9-2 shows the reduction in ringing compared to higher drive parts such as AC.

9.2 Typical Application

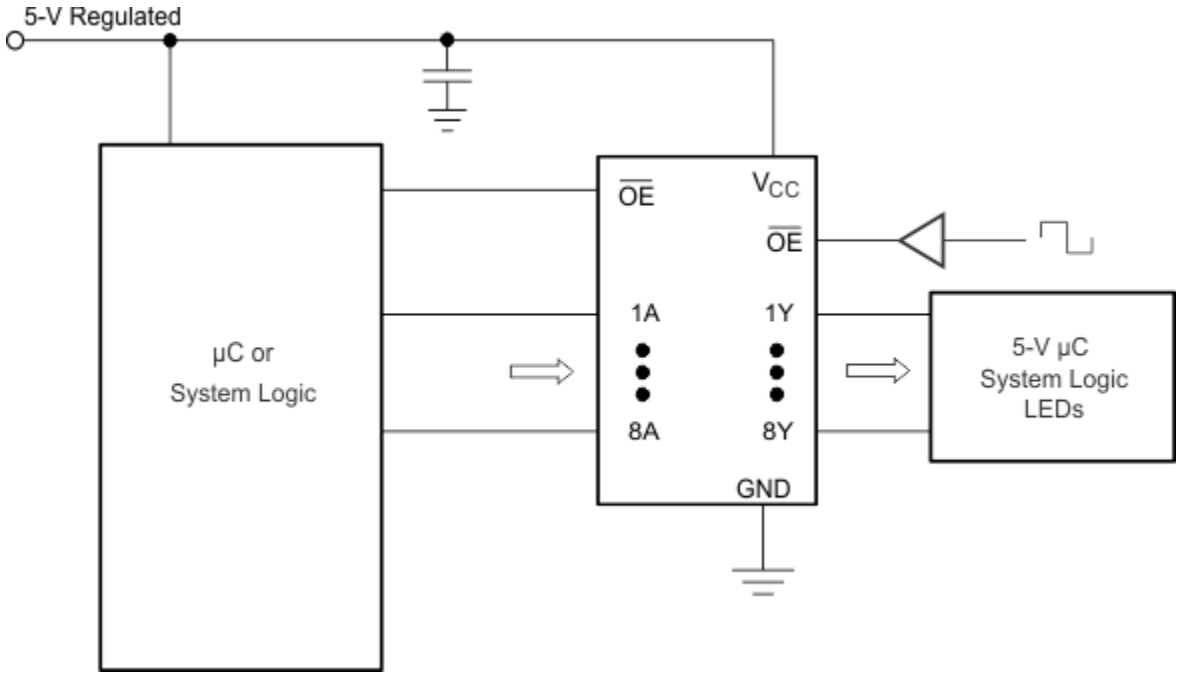

图 9-1. Typical Application Schematic

9.2.1 Design Requirements

This device uses CMOS technology and has balanced output drive. Care should be taken to avoid bus contention because it can drive currents that would exceed maximum limits. The high drive will also create fast edges into light loads, so routing and load conditions should be considered to prevent ringing.

9.2.2 Detailed Design Procedure

1. Recommended Input Conditions
   - For rise time and fall time specifications, see $\Delta t/\Delta V$ in the *Recommended Operating Conditions* table.
   - For specified High and low levels, see V_{IH} and V_{IL} in the *Recommended Operating Conditions* table.
   - Inputs are overvoltage tolerant allowing them to go as high as 5.5 V at any valid V_{CC}.
2. Recommend Output Conditions
   - Load currents should not exceed 35 mA per output and 70 mA total for the part.
   - Outputs should not be pulled above V_{CC}.

Copyright © 2023 Texas Instruments Incorporated

9.2.3 Application Curves

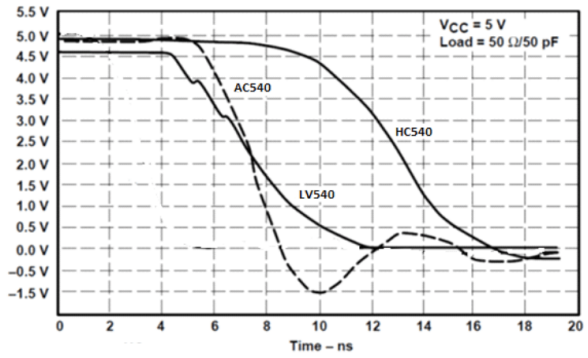

图 9-2. Switching Characteristics Comparison

9.3 Power Supply Recommendations

The power supply can be any voltage between the MIN and MAX supply voltage rating located in the *Recommended Operating Conditions* table.

Each V_{CC} pin should have a good bypass capacitor to prevent power disturbance. For devices with a single supply, 0.1 μF is recommended. If there are multiple V_{CC} pins, 0.01 μF or 0.022 μF is recommended for each power pin. It is acceptable to parallel multiple bypass caps to reject different frequencies of noise. A 0.1 μF and 1 μF are commonly used in parallel. The bypass capacitor should be installed as close to the power pin as possible for best results.

9.4 Layout

9.4.1 Layout Guidelines

When using multiple bit logic devices, inputs should not float. In many cases, functions or parts of functions of digital logic devices are unused. Some examples are when only two inputs of a triple-input AND gate are used, or when only 3 of the 4-buffer gates are used. Such input pins should not be left unconnected because the undefined voltages at the outside connections result in undefined operational states.

Specified in 图 9-3 are rules that must be observed under all circumstances. All unused inputs of digital logic devices must be connected to a high or low bias to prevent them from floating. The logic level that should be applied to any particular unused input depends on the function of the device. Generally they will be tied to GND or V_{CC}, whichever makes more sense or is more convenient. It is acceptable to float outputs unless the part is a transceiver. If the transceiver has an output enable pin, it will disable the outputs section of the part when asserted. This will not disable the input section of the I/Os so they also cannot float when disabled.

9.4.2 Layout Example

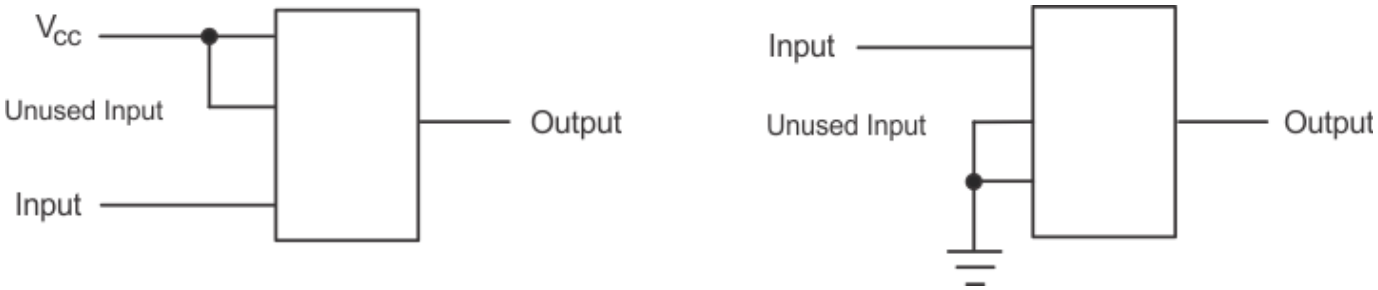

图 9-3. Layout Diagram

Copyright © 2023 Texas Instruments Incorporated

10 Device and Documentation Support

10.1 Documentation Support

10.1.1 Related Links

The table below lists quick access links. Categories include technical documents, support and community resources, tools and software, and quick access to sample or buy.

表 10-1. Related Links

PARTS	PRODUCT FOLDER	SAMPLE & BUY	TECHNICAL DOCUMENTS	TOOLS & SOFTWARE	SUPPORT & COMMUNITY
SN74LV540A	Click here	Click here	Click here	Click here	Click here

10.2 接收文档更新通知

要接收文档更新通知，请导航至 ti.com 上的器件产品文件夹。点击 *订阅更新* 进行注册，即可每周接收产品信息更改摘要。有关更改的详细信息，请查看任何已修订文档中包含的修订历史记录。

10.3 支持资源

TI E2E™ 支持论坛是工程师的重要参考资料，可直接从专家获得快速、经过验证的解答和设计帮助。搜索现有解答或提出自己的问题可获得所需的快速设计帮助。

链接的内容由各个贡献者“按原样”提供。这些内容并不构成 TI 技术规范，并且不一定反映 TI 的观点；请参阅 TI 的《使用条款》。

10.4 Trademarks

TI E2E™ is a trademark of Texas Instruments.
所有商标均为其各自所有者的财产。

10.5 静电放电警告

静电放电 (ESD) 会损坏这个集成电路。德州仪器 (TI) 建议通过适当的预防措施处理所有集成电路。如果不遵守正确的处理和安装程序，可能会损坏集成电路。

ESD 的损坏小至导致微小的性能降级，大至整个器件故障。精密的集成电路可能更容易受到损坏，这是因为非常细微的参数更改都可能会导致器件与其发布的规格不相符。

10.6 术语表

TI 术语表　　本术语表列出并解释了术语、首字母缩略词和定义。

11 Mechanical, Packaging, and Orderable Information

The following pages include mechanical, packaging, and orderable information. This information is the most current data available for the designated devices. This data is subject to change without notice and revision of this document. For browser-based versions of this data sheet, refer to the left-hand navigation.

Copyright © 2023 Texas Instruments Incorporated

PACKAGING INFORMATION

Orderable part number	Status (1)	Material type (2)	Package | Pins	Package qty | Carrier	RoHS (3)	Lead finish/ Ball material (4)	MSL rating/ Peak reflow (5)	Op temp (°C)	Part marking (6)
SN74LV540ADBR	NRND	Production	SSOP (DB) | 20	2000 | LARGE T&R	Yes	NIPDAU	Level-1-260C-UNLIM	-40 to 125	LV540A
SN74LV540ADBR.A	NRND	Production	SSOP (DB) | 20	2000 | LARGE T&R	Yes	NIPDAU	Level-1-260C-UNLIM	-40 to 125	LV540A
SN74LV540ADGVR	Active	Production	TVSOP (DGV) | 20	2000 | LARGE T&R	Yes	NIPDAU	Level-1-260C-UNLIM	-40 to 125	LV540A
SN74LV540ADGVR.A	Active	Production	TVSOP (DGV) | 20	2000 | LARGE T&R	Yes	NIPDAU	Level-1-260C-UNLIM	-40 to 125	LV540A
SN74LV540ADW	Obsolete	Production	SOIC (DW) | 20	-	-	Call TI	Call TI	-40 to 125	LV540A
SN74LV540ADWR	Active	Production	SOIC (DW) | 20	2000 | LARGE T&R	Yes	NIPDAU	Level-1-260C-UNLIM	-40 to 125	LV540A
SN74LV540ADWR.A	Active	Production	SOIC (DW) | 20	2000 | LARGE T&R	Yes	NIPDAU	Level-1-260C-UNLIM	-40 to 125	LV540A
SN74LV540ANSR	Last Time Buy	Production	SOP (NS) | 20	2000 | LARGE T&R	Yes	NIPDAU	Level-1-260C-UNLIM	-40 to 125	74LV540A
SN74LV540ANSR.A	Last Time Buy	Production	SOP (NS) | 20	2000 | LARGE T&R	Yes	NIPDAU	Level-1-260C-UNLIM	-40 to 125	74LV540A
SN74LV540APW	Obsolete	Production	TSSOP (PW) | 20	-	-	Call TI	Call TI	-40 to 125	LV540A
SN74LV540APWR	Active	Production	TSSOP (PW) | 20	2000 | LARGE T&R	Yes	NIPDAU	Level-1-260C-UNLIM	-40 to 125	LV540A
SN74LV540APWR.A	Active	Production	TSSOP (PW) | 20	2000 | LARGE T&R	Yes	NIPDAU	Level-1-260C-UNLIM	-40 to 125	LV540A
SN74LV540ARGYR	Last Time Buy	Production	VQFN (RGY) | 20	3000 | LARGE T&R	Yes	NIPDAU	Level-2-260C-1 YEAR	-40 to 125	LV540A
SN74LV540ARGYR.A	Last Time Buy	Production	VQFN (RGY) | 20	3000 | LARGE T&R	Yes	NIPDAU	Level-2-260C-1 YEAR	-40 to 125	LV540A

(1) **Status:** For more details on status, see our product life cycle.

(2) **Material type:** When designated, preproduction parts are prototypes/experimental devices, and are not yet approved or released for full production. Testing and final process, including without limitation quality assurance, reliability performance testing, and/or process qualification, may not yet be complete, and this item is subject to further changes or possible discontinuation. If available for ordering, purchases will be subject to an additional waiver at checkout, and are intended for early internal evaluation purposes only. These items are sold without warranties of any kind.

(3) **RoHS values:** Yes, No, RoHS Exempt. See the TI RoHS Statement for additional information and value definition.

(4) **Lead finish/Ball material:** Parts may have multiple material finish options. Finish options are separated by a vertical ruled line. Lead finish/Ball material values may wrap to two lines if the finish value exceeds the maximum column width.

(5) **MSL rating/Peak reflow:** The moisture sensitivity level ratings and peak solder (reflow) temperatures. In the event that a part has multiple moisture sensitivity ratings, only the lowest level per JEDEC standards is shown. Refer to the shipping label for the actual reflow temperature that will be used to mount the part to the printed circuit board.

(6) **Part marking:** There may be an additional marking, which relates to the logo, the lot trace code information, or the environmental category of the part.

Multiple part markings will be inside parentheses. Only one part marking contained in parentheses and separated by a "~" will appear on a part. If a line is indented then it is a continuation of the previous line and the two combined represent the entire part marking for that device.

Important Information and Disclaimer: The information provided on this page represents TI's knowledge and belief as of the date that it is provided. TI bases its knowledge and belief on information provided by third parties, and makes no representation or warranty as to the accuracy of such information. Efforts are underway to better integrate information from third parties. TI has taken and continues to take reasonable steps to provide representative and accurate information but may not have conducted destructive testing or chemical analysis on incoming materials and chemicals. TI and TI suppliers consider certain information to be proprietary, and thus CAS numbers and other limited information may not be available for release.

In no event shall TI's liability arising out of such information exceed the total purchase price of the TI part(s) at issue in this document sold by TI to Customer on an annual basis.

TAPE AND REEL INFORMATION

REEL DIMENSIONS

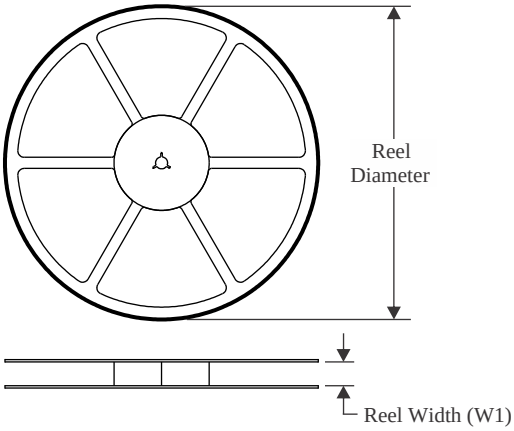

TAPE DIMENSIONS

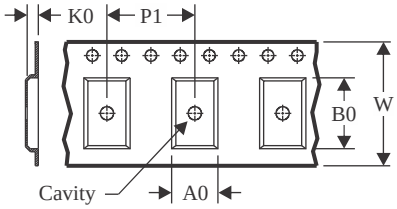

A0	Dimension designed to accommodate the component width
B0	Dimension designed to accommodate the component length
K0	Dimension designed to accommodate the component thickness
W	Overall width of the carrier tape
P1	Pitch between successive cavity centers

QUADRANT ASSIGNMENTS FOR PIN 1 ORIENTATION IN TAPE

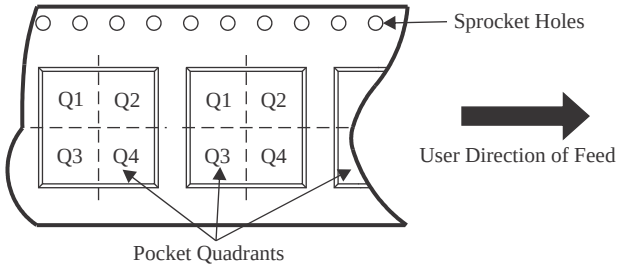

*All dimensions are nominal

Device	Package Type	Package Drawing	Pins	SPQ	Reel Diameter (mm)	Reel Width W1 (mm)	A0 (mm)	B0 (mm)	K0 (mm)	P1 (mm)	W (mm)	Pin1 Quadrant
SN74LV540ADBR	SSOP	DB	20	2000	330.0	16.4	8.2	7.5	2.5	12.0	16.0	Q1
SN74LV540ADGVR	TVSOP	DGV	20	2000	330.0	12.4	6.9	5.6	1.6	8.0	12.0	Q1
SN74LV540ADWR	SOIC	DW	20	2000	330.0	24.4	10.8	13.3	2.7	12.0	24.0	Q1
SN74LV540ANSR	SOP	NS	20	2000	330.0	24.4	8.4	13.0	2.5	12.0	24.0	Q1
SN74LV540APWR	TSSOP	PW	20	2000	330.0	16.4	6.95	7.0	1.4	8.0	16.0	Q1
SN74LV540ARGYR	VQFN	RGY	20	3000	330.0	12.4	3.71	4.71	1.1	8.0	12.0	Q1

TAPE AND REEL BOX DIMENSIONS

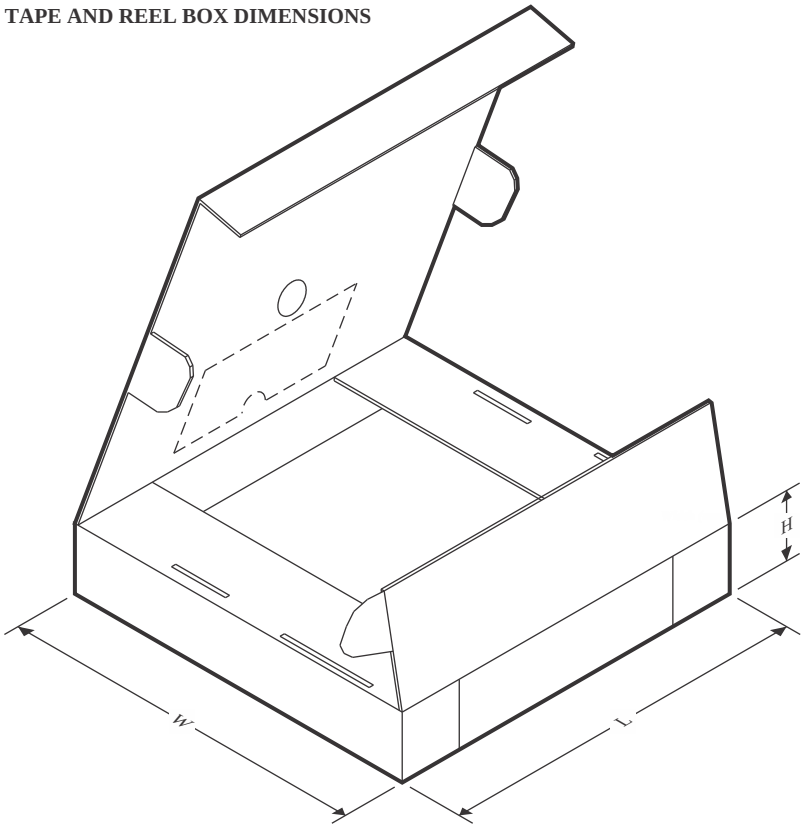

*All dimensions are nominal

Device	Package Type	Package Drawing	Pins	SPQ	Length (mm)	Width (mm)	Height (mm)
SN74LV540ADBR	SSOP	DB	20	2000	353.0	353.0	32.0
SN74LV540ADGVR	TVSOP	DGV	20	2000	353.0	353.0	32.0
SN74LV540ADWR	SOIC	DW	20	2000	356.0	356.0	45.0
SN74LV540ANSR	SOP	NS	20	2000	356.0	356.0	45.0
SN74LV540APWR	TSSOP	PW	20	2000	353.0	353.0	32.0
SN74LV540ARGYR	VQFN	RGY	20	3000	353.0	353.0	32.0

DGV (R-PDSO-G)** **PLASTIC SMALL-OUTLINE**

24 PINS SHOWN

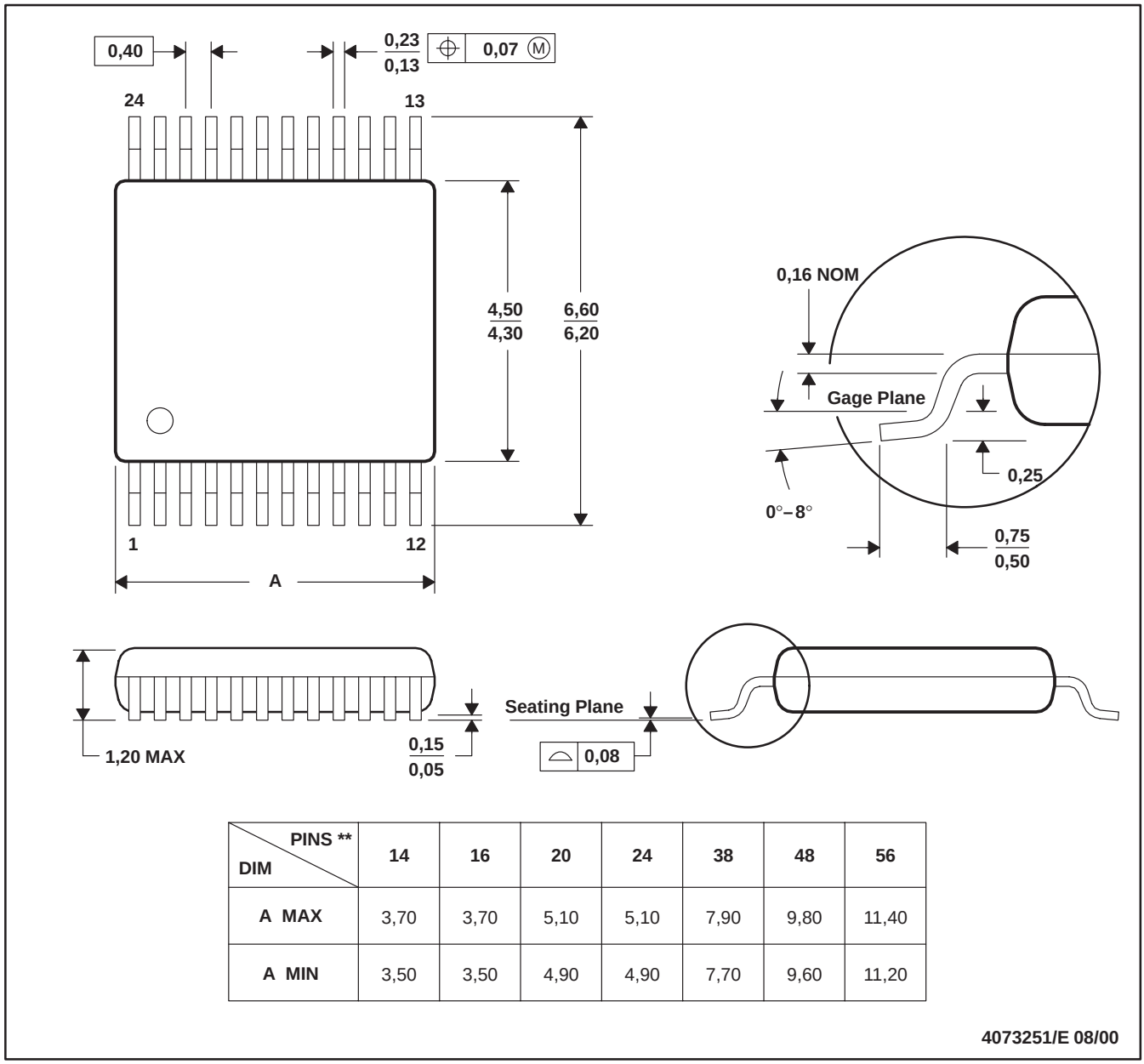

DIM \ PINS **	14	16	20	24	38	48	56
A MAX	3,70	3,70	5,10	5,10	7,90	9,80	11,40
A MIN	3,50	3,50	4,90	4,90	7,70	9,60	11,20

4073251/E 08/00

NOTES: A. All linear dimensions are in millimeters.
B. This drawing is subject to change without notice.
C. Body dimensions do not include mold flash or protrusion, not to exceed 0,15 per side.
D. Falls within JEDEC: 24/48 Pins – MO-153
14/16/20/56 Pins – MO-194

GENERIC PACKAGE VIEW

RGY 20

VQFN - 1 mm max height

3.5 x 4.5, 0.5 mm pitch

PLASTIC QUAD FGLATPACK - NO LEAD

This image is a representation of the package family, actual package may vary.
Refer to the product data sheet for package details.

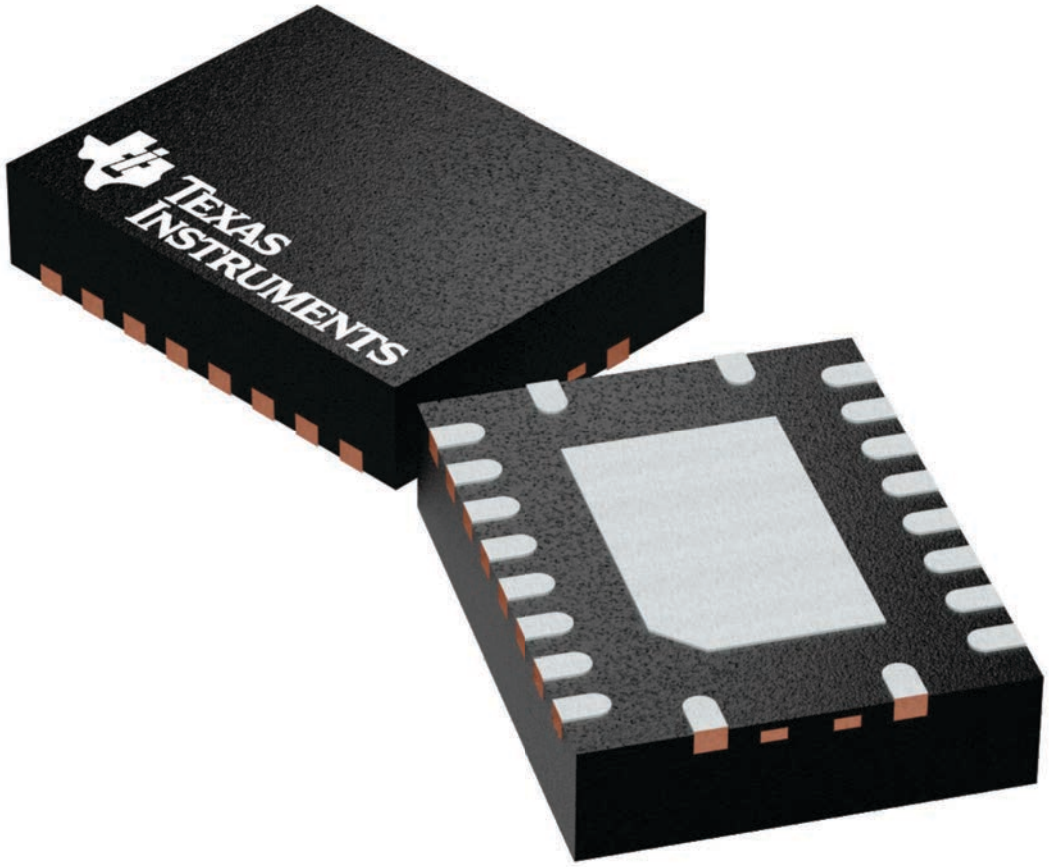

4225264/A

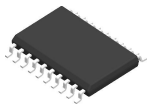

PACKAGE OUTLINE

DW0020A

SOIC - 2.65 mm max height

SOIC

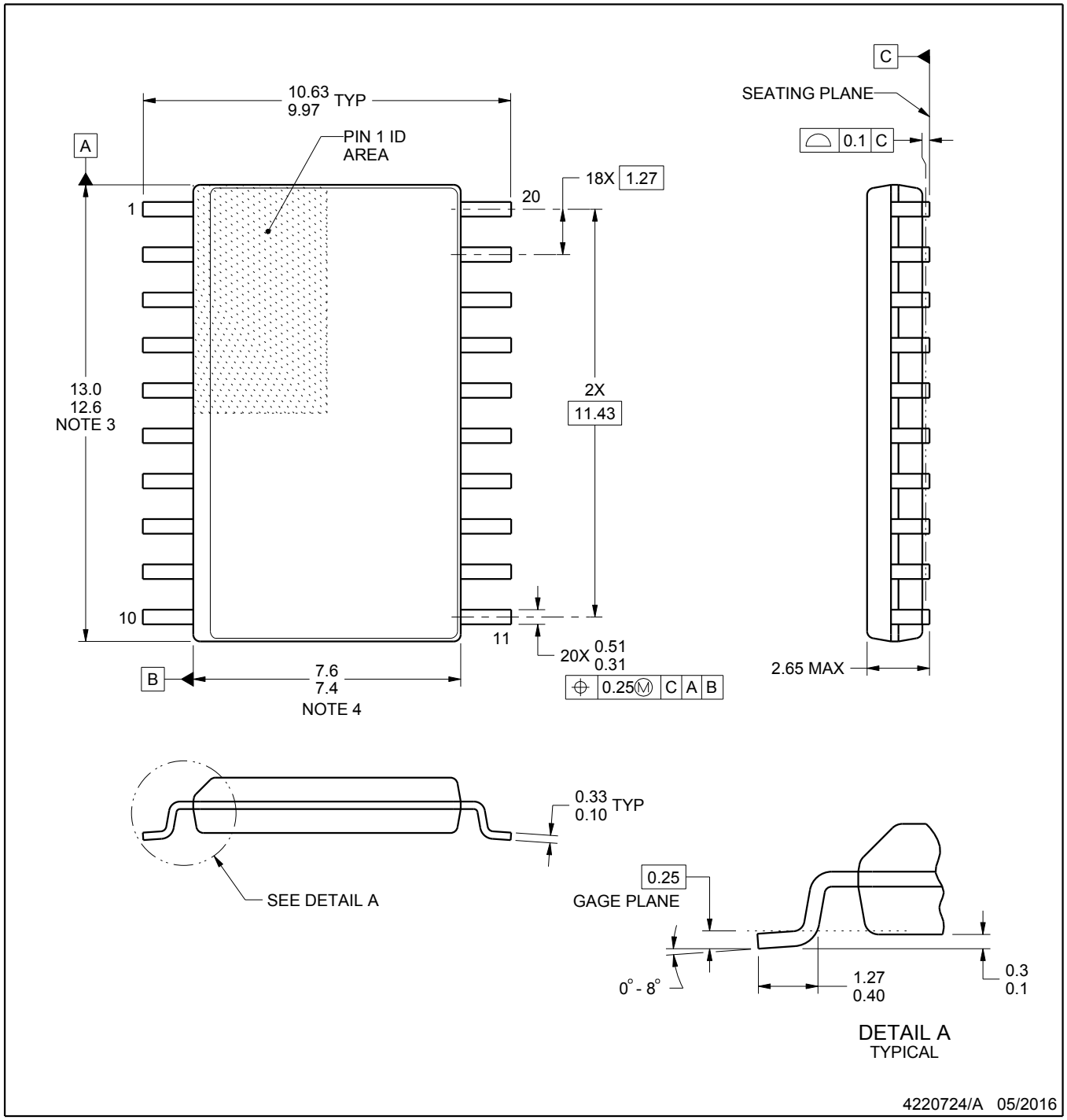

NOTES:

1. All linear dimensions are in millimeters. Dimensions in parenthesis are for reference only. Dimensioning and tolerancing per ASME Y14.5M.
2. This drawing is subject to change without notice.
3. This dimension does not include mold flash, protrusions, or gate burrs. Mold flash, protrusions, or gate burrs shall not exceed 0.15 mm per side.
4. This dimension does not include interlead flash. Interlead flash shall not exceed 0.43 mm per side.
5. Reference JEDEC registration MS-013.

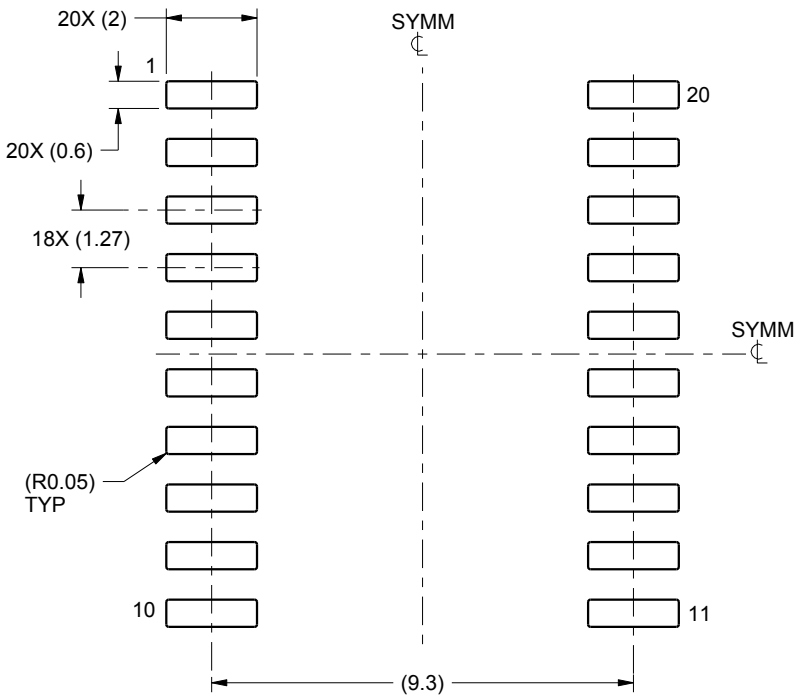

LAND PATTERN EXAMPLE
SCALE:6X

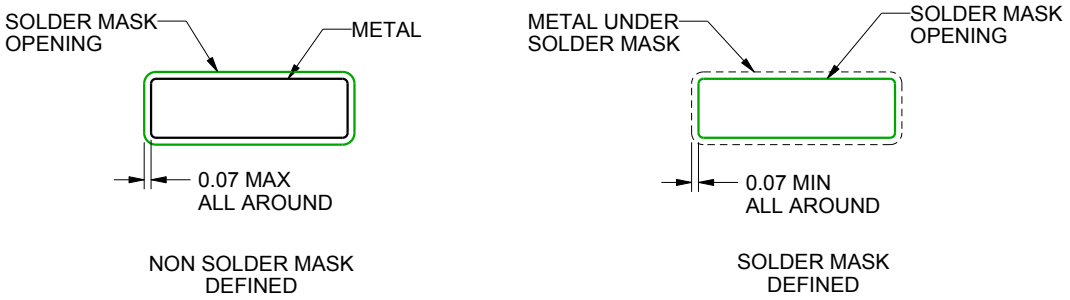

SOLDER MASK DETAILS

4220724/A 05/2016

NOTES: (continued)

6. Publication IPC-7351 may have alternate designs.
7. Solder mask tolerances between and around signal pads can vary based on board fabrication site.

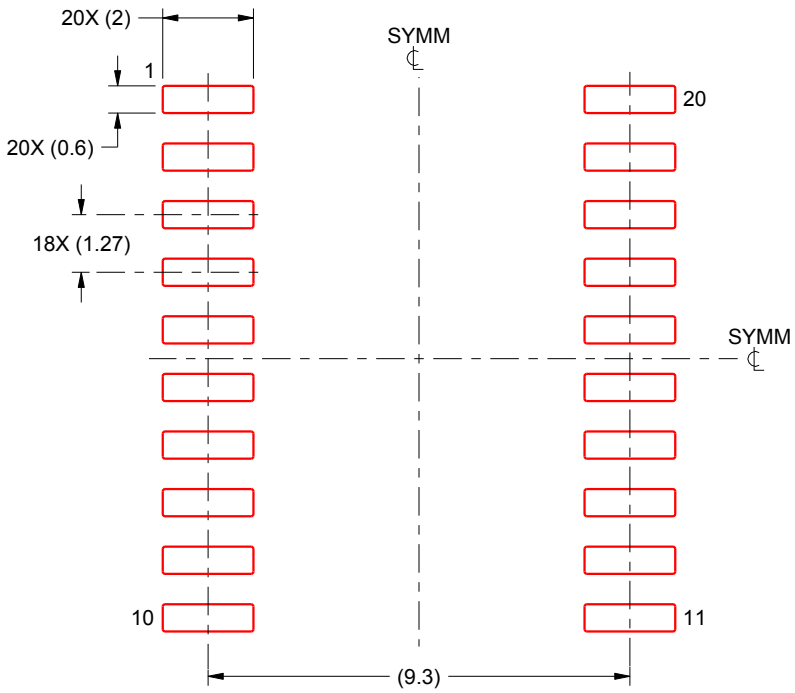

SOLDER PASTE EXAMPLE
BASED ON 0.125 mm THICK STENCIL
SCALE:6X

4220724/A 05/2016

NOTES: (continued)

8. Laser cutting apertures with trapezoidal walls and rounded corners may offer better paste release. IPC-7525 may have alternate design recommendations.
9. Board assembly site may have different recommendations for stencil design.

PACKAGE OUTLINE

PW0020A

TSSOP - 1.2 mm max height

SMALL OUTLINE PACKAGE

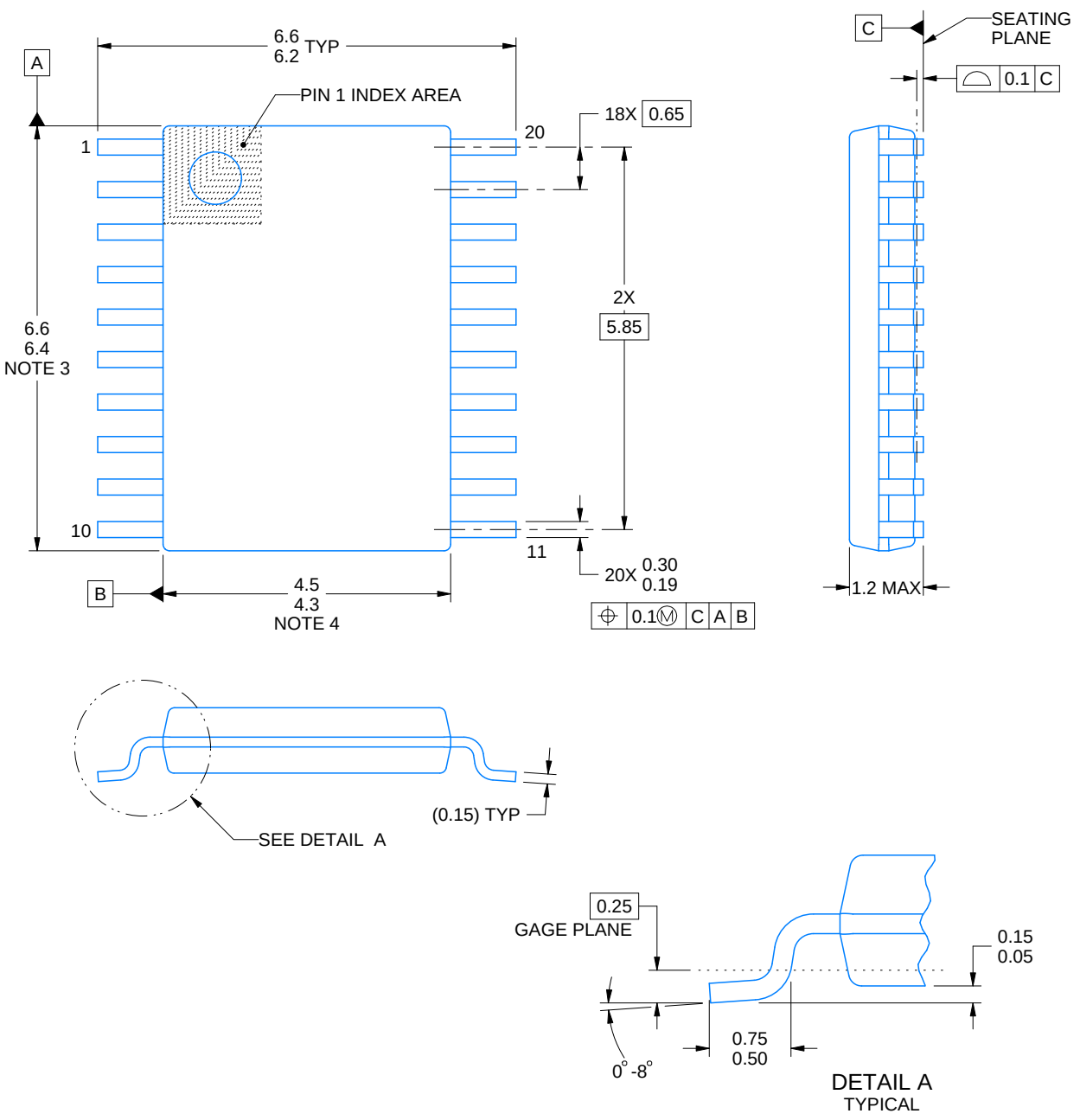

NOTES:

1. All linear dimensions are in millimeters. Any dimensions in parenthesis are for reference only. Dimensioning and tolerancing per ASME Y14.5M.
2. This drawing is subject to change without notice.
3. This dimension does not include mold flash, protrusions, or gate burrs. Mold flash, protrusions, or gate burrs shall not exceed 0.15 mm per side.
4. This dimension does not include interlead flash. Interlead flash shall not exceed 0.25 mm per side.
5. Reference JEDEC registration MO-153.

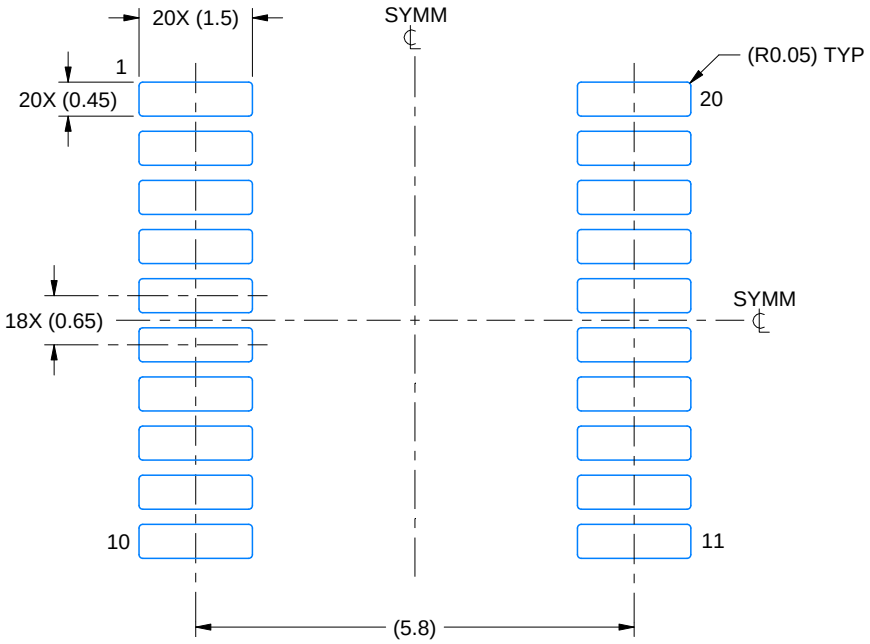

LAND PATTERN EXAMPLE
EXPOSED METAL SHOWN
SCALE: 10X



SOLDER MASK DETAILS

4220206/A 02/2017

NOTES: (continued)

6. Publication IPC-7351 may have alternate designs.
7. Solder mask tolerances between and around signal pads can vary based on board fabrication site.

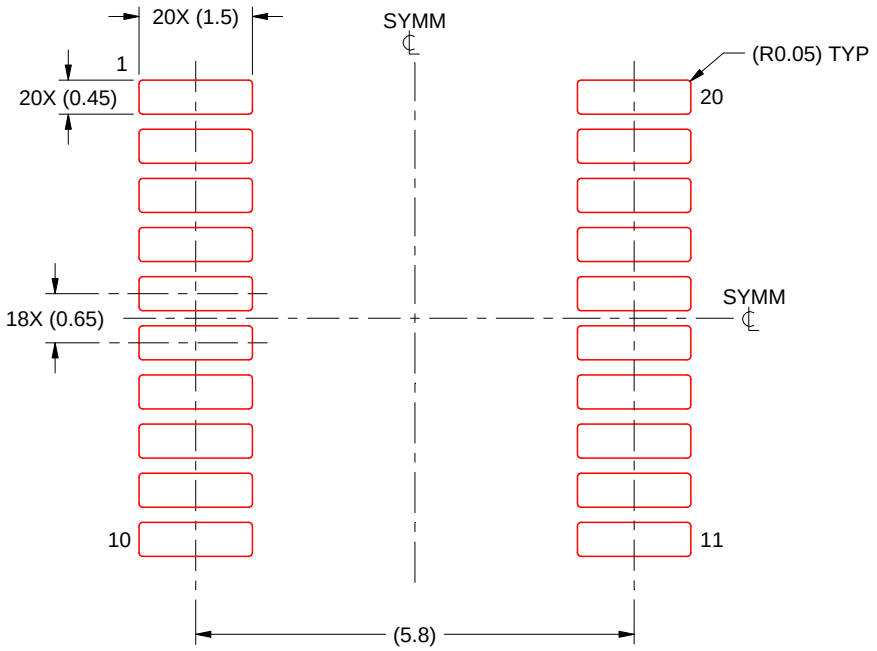

SOLDER PASTE EXAMPLE
BASED ON 0.125 mm THICK STENCIL
SCALE: 10X

4220206/A 02/2017

NOTES: (continued)

8. Laser cutting apertures with trapezoidal walls and rounded corners may offer better paste release. IPC-7525 may have alternate design recommendations.
9. Board assembly site may have different recommendations for stencil design.

PACKAGE OUTLINE

DB0020A

SSOP - 2 mm max height

SMALL OUTLINE PACKAGE

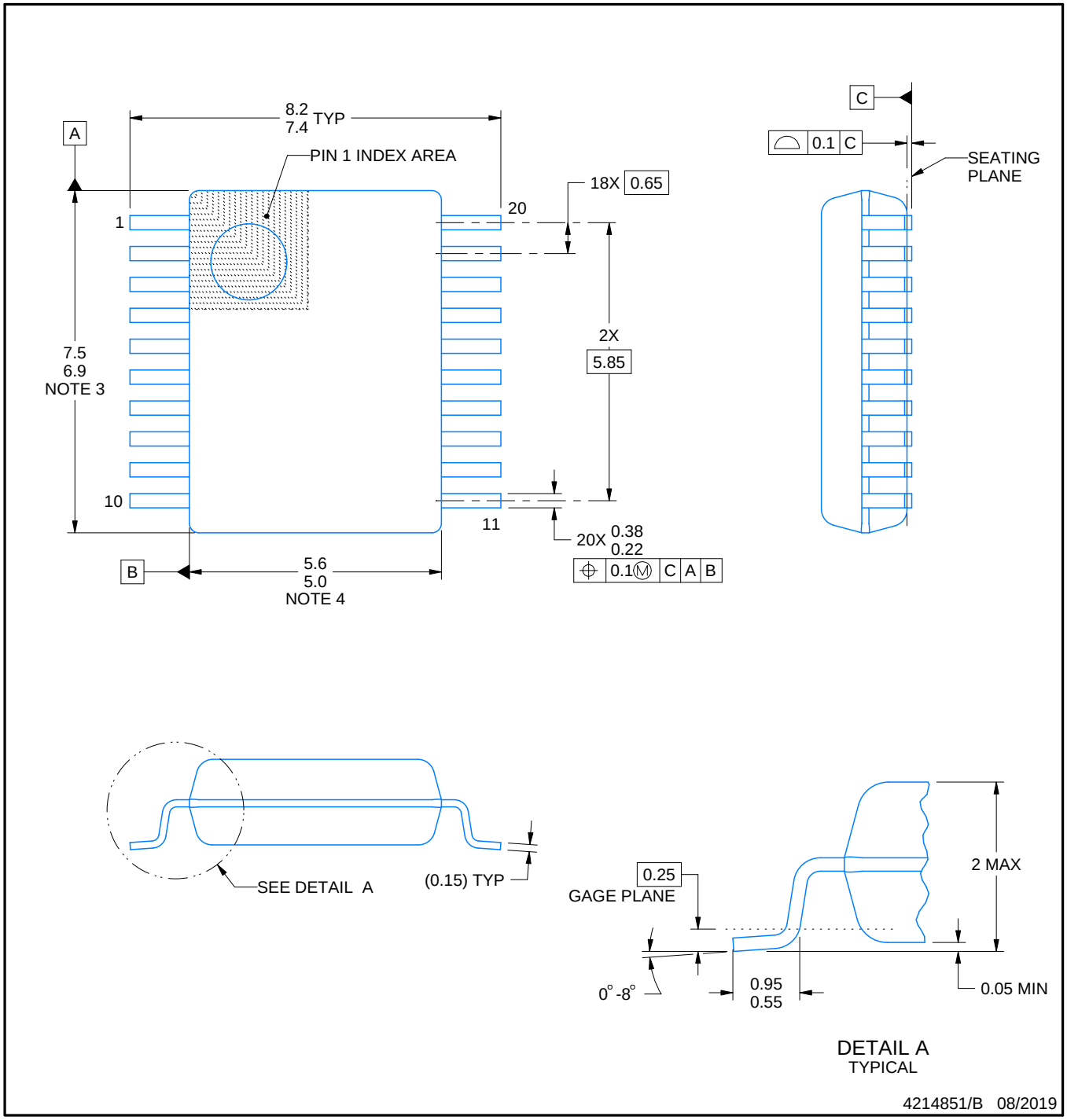

NOTES:

1. All linear dimensions are in millimeters. Any dimensions in parenthesis are for reference only. Dimensioning and tolerancing per ASME Y14.5M.
2. This drawing is subject to change without notice.
3. This dimension does not include mold flash, protrusions, or gate burrs. Mold flash, protrusions, or gate burrs shall not exceed 0.15 mm per side.
4. This dimension does not include interlead flash. Interlead flash shall not exceed 0.25 mm per side.
5. Reference JEDEC registration MO-150.

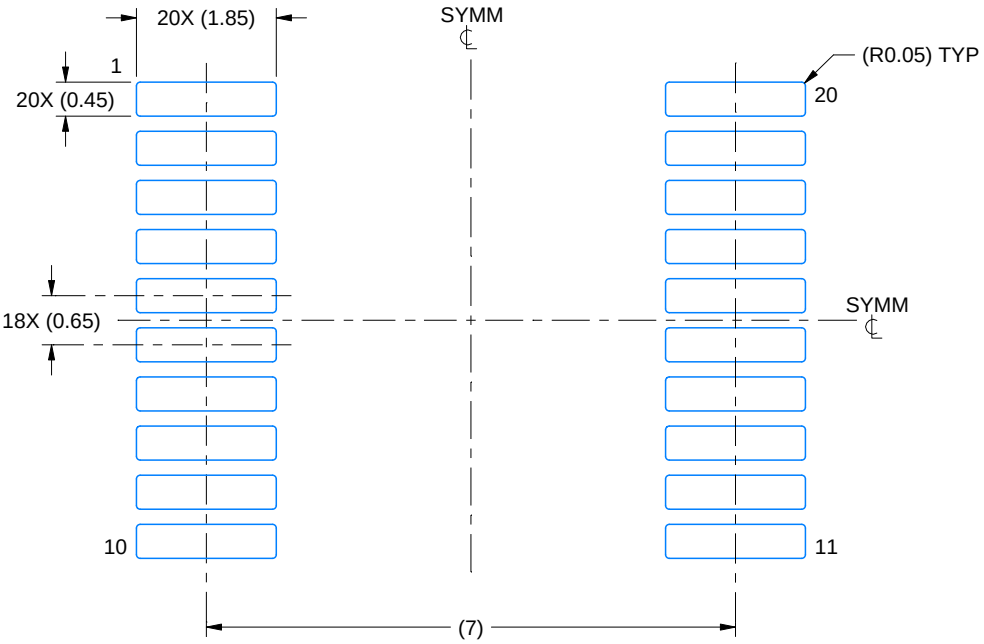

LAND PATTERN EXAMPLE
EXPOSED METAL SHOWN
SCALE: 10X

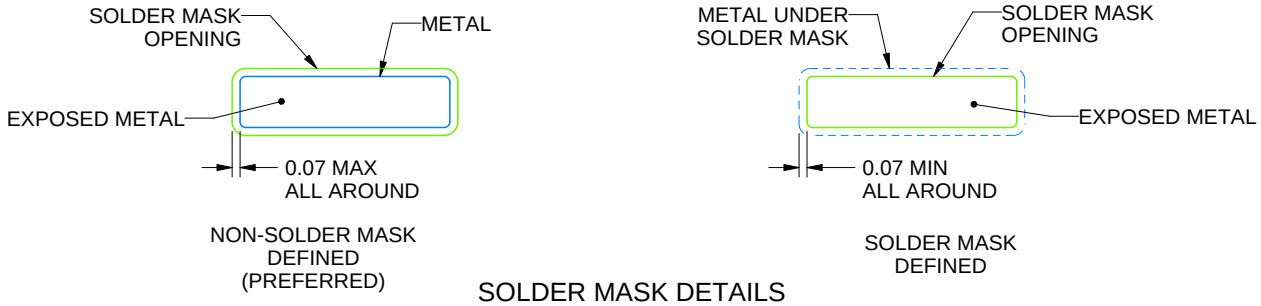

SOLDER MASK DETAILS

4214851/B 08/2019

NOTES: (continued)

6. Publication IPC-7351 may have alternate designs.
7. Solder mask tolerances between and around signal pads can vary based on board fabrication site.

EXAMPLE STENCIL DESIGN

DB0020A

SSOP - 2 mm max height

SMALL OUTLINE PACKAGE

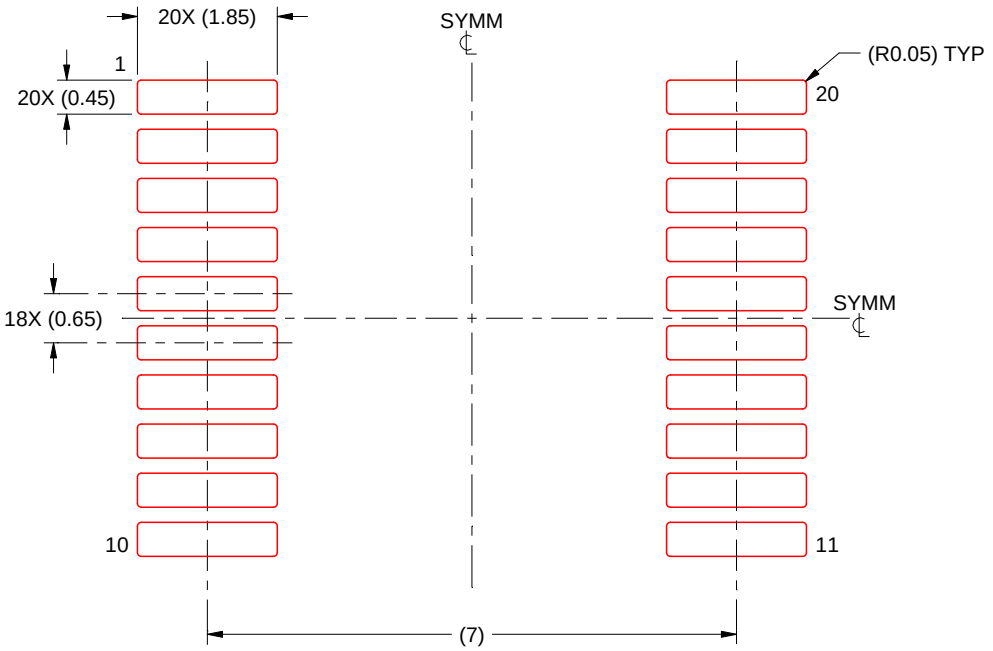

SOLDER PASTE EXAMPLE
BASED ON 0.125 mm THICK STENCIL
SCALE: 10X

4214851/B 08/2019

NOTES: (continued)

8. Laser cutting apertures with trapezoidal walls and rounded corners may offer better paste release. IPC-7525 may have alternate design recommendations.
9. Board assembly site may have different recommendations for stencil design.

MECHANICAL DATA

NS (R-PDSO-G)** **PLASTIC SMALL-OUTLINE PACKAGE**

14-PINS SHOWN

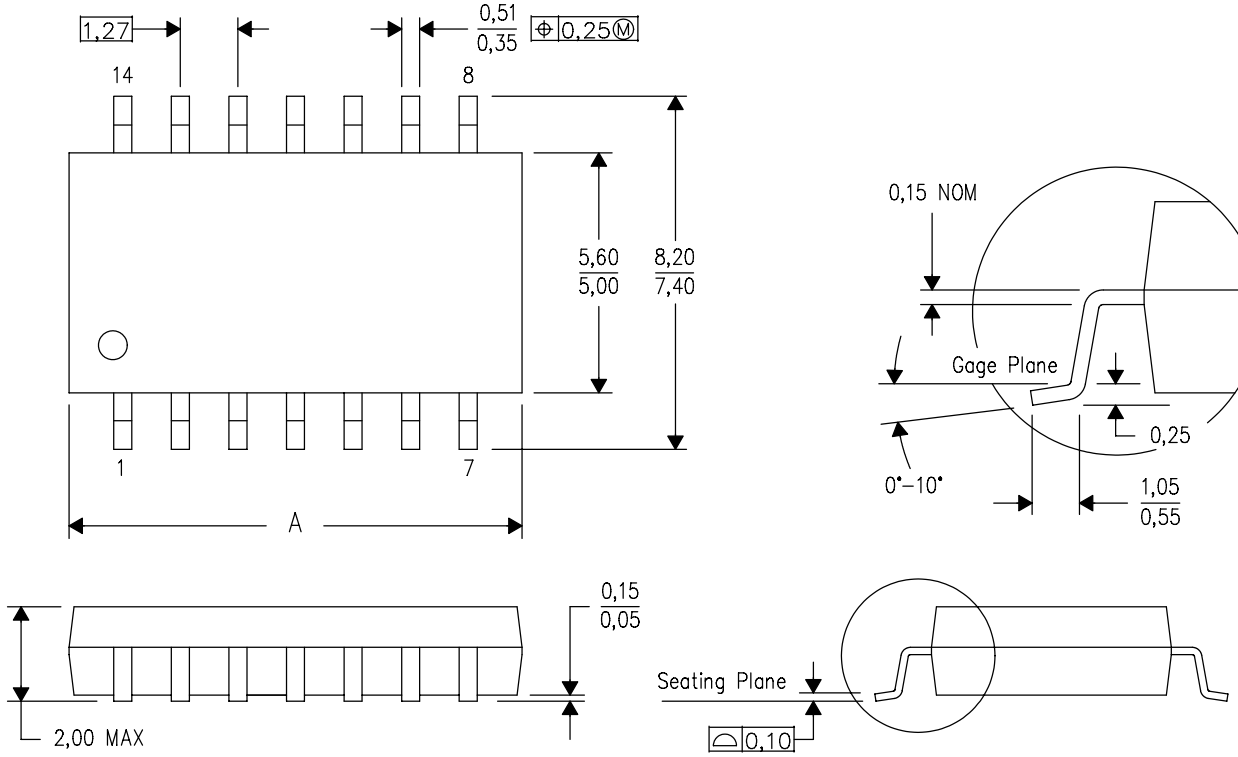

DIM \ PINS **	14	16	20	24
A MAX	10,50	10,50	12,90	15,30
A MIN	9,90	9,90	12,30	14,70

4040062/C 03/03

NOTES:
A. All linear dimensions are in millimeters.
B. This drawing is subject to change without notice.
C. Body dimensions do not include mold flash or protrusion, not to exceed 0,15.

重要通知和免责声明

TI“按原样”提供技术和可靠性数据（包括数据表）、设计资源（包括参考设计）、应用或其他设计建议、网络工具、安全信息和其他资源，不保证没有瑕疵且不做出任何明示或暗示的担保，包括但不限于对适销性、与某特定用途的适用性或不侵犯任何第三方知识产权的暗示担保。

这些资源可供使用 TI 产品进行设计的熟练开发人员使用。您将自行承担以下全部责任：(1) 针对您的应用选择合适的 TI 产品，(2) 设计、验证并测试您的应用，(3) 确保您的应用满足相应标准以及任何其他安全、安保法规或其他要求。

这些资源如有变更，恕不另行通知。TI 授权您仅可将这些资源用于研发本资源所述的 TI 产品的相关应用。严禁以其他方式对这些资源进行复制或展示。您无权使用任何其他 TI 知识产权或任何第三方知识产权。对于因您对这些资源的使用而对 TI 及其代表造成的任何索赔、损害、成本、损失和债务，您将全额赔偿，TI 对此概不负责。

TI 提供的产品受 TI 销售条款)、TI 通用质量指南 或 ti.com 上其他适用条款或 TI 产品随附的其他适用条款的约束。TI 提供这些资源并不会扩展或以其他方式更改 TI 针对 TI 产品发布的适用的担保或担保免责声明。 除非德州仪器 (TI) 明确将某产品指定为定制产品或客户特定产品，否则其产品均为按确定价格收入目录的标准通用器件。

TI 反对并拒绝您可能提出的任何其他或不同的条款。

版权所有 © 2026，德州仪器 (TI) 公司

最后更新日期：2025 年 10 月