- **8-Bit Resolution**
- **±0.2% Linearity**
- **Maximum Conversion Rate**
  - **30 MHz Typ**
  - **20 MHz Min**
- **Analog Output Voltage Range V_{DD} to V_{DD} −1 V**
- **TTL Digital Input Voltage**
- **5-V Single Power-Supply Operation**
- **Low Power Consumption . . . 80 mW Typ**
- **Interchangeable With Fujitsu MB40778**

description

The TLC5602x devices are low-power, ultra-high-speed video, digital-to-analog converters that use the LinEPIC™ 1-µm CMOS process. The TLC5602x converts digital signals to analog signals at a sampling rate of dc to 20 MHz. Because of high-speed operation, the TLC5602x devices are suitable for digital video applications such as digital television, video processing with a computer, and radar-signal processing.

The TLC5602C is characterized for operation from 0°C to 70°C. The TLC5602M is characterized over the full military temperature range of –55°C to 125°C.

N PACKAGE
(TOP VIEW)

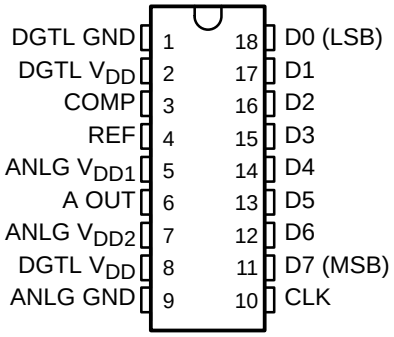

DW PACKAGE
(TOP VIEW)

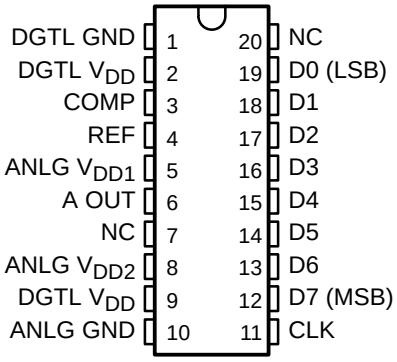

J PACKAGE
(TOP VIEW)

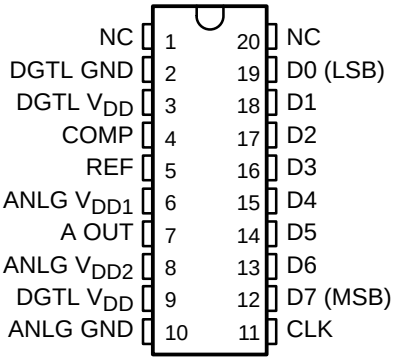

FK PACKAGE
(TOP VIEW)

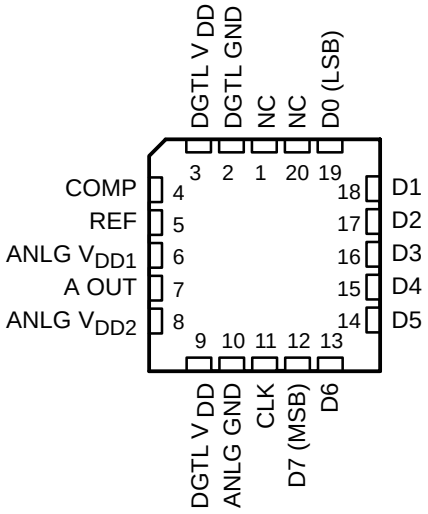

NC—No internal connection

LinEPIC is a trademark of Texas Instruments Incorporated.

PRODUCTION DATA information is current as of publication date. Products conform to specifications per the terms of Texas Instruments standard warranty. Production processing does not necessarily include testing of all parameters.

Copyright © 2002, Texas Instruments Incorporated

AVAILABLE OPTIONS

PACKAGE				
T_A	WIDE-BODY SMALL OUTLINE (DW)	CERAMIC CHIP CARRIER (FK)	CERAMIC DIP (J)	PLASTIC DIP (N)
0°C to 70°C	TLC5602CDW			TLC5602CN
–55°C to 125°C		TLC5602MFK	TLC5602MJ	

functional block diagram

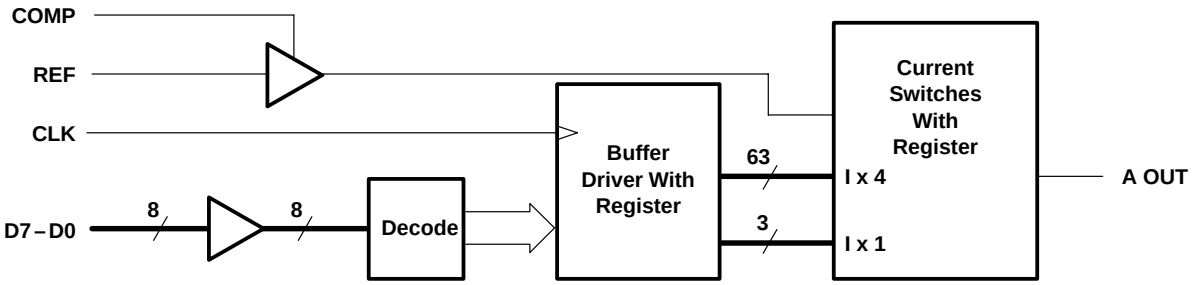

FUNCTION TABLE

STEP	DIGITAL INPUTS								OUTPUT VOLTAGE†
	D7	D6	D5	D4	D3	D2	D1	D0	
0	L	L	L	L	L	L	L	L	3.980 V
1	L	L	L	L	L	L	L	H	3.984 V
⋮					⋮				⋮
127	L	H	H	H	H	H	H	H	4.488 V
128	H	L	L	L	L	L	L	L	4.492 V
129	H	L	L	L	L	L	L	H	4.496 V
⋮					⋮				⋮
254	H	H	H	H	H	H	H	L	4.996 V
255	H	H	H	H	H	H	H	H	5.000 V

† V_{DD} = 5 V and V_{ref} = 4.02 V

schematics of equivalent input and output

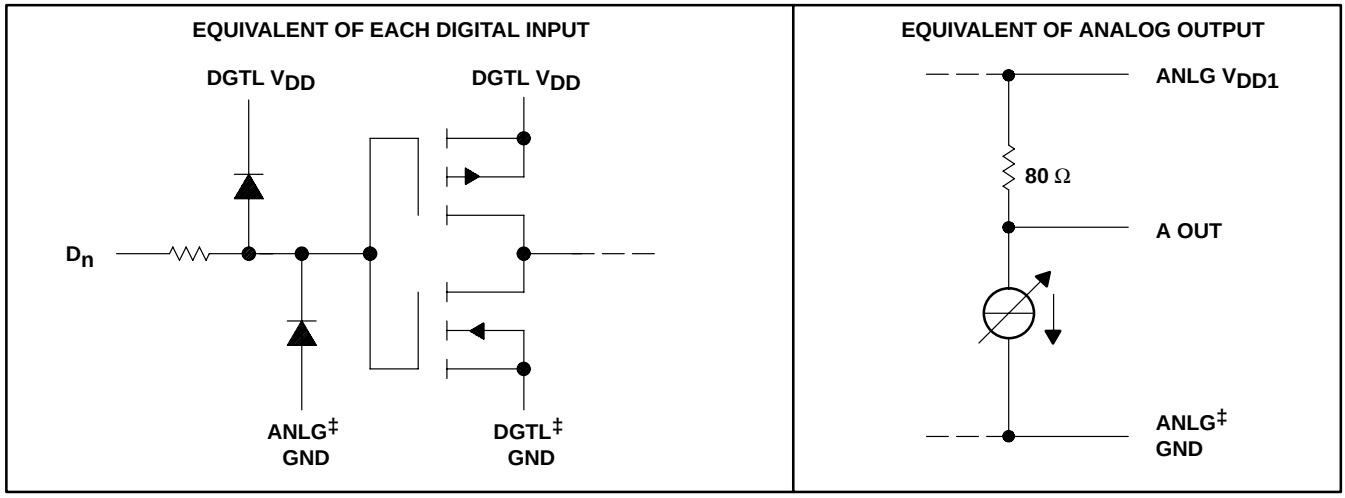

‡ ANLG GND and DGTL GND do not connect internally and should be tied together as close to the device terminals as possible.

absolute maximum ratings over operating free-air temperature range (unless otherwise noted)†

Supply voltage range, ANLG V_{DD}, DGTL V_{DD} . . . . . –0.5 V to 7 V
Digital input voltage range, V_I . . . . . –0.5 V to 7 V
Analog reference voltage range, V_{ref} . . . . . V_{DD} – 1.7 V to V_{DD} + 0.5 V
Operating free-air temperature range, T_A: TLC5602C . . . . . 0°C to 70°C
TLC5602M . . . . . –55°C to 125°C
Storage temperature range, T_{stg} . . . . . –65°C to 150°C
Lead temperature 1,6 mm (1/16 inch) from case for 10 seconds . . . . . 260°C

† Stresses beyond those listed under “absolute maximum ratings” may cause permanent damage to the device. These are stress ratings only, and functional operation of the device at these or any other conditions beyond those indicated under “recommended operating conditions” is not implied. Exposure to absolute-maximum-rated conditions for extended periods may affect device reliability.

recommended operating conditions

		MIN	NOM	MAX	UNIT
Supply voltage, V_{DD}		4.75	5	5.25	V
Analog reference voltage, V_{ref}		3.8	4	4.2	V
High-level input voltage, V_{IH}		2			V
Low-level input voltage, V_{IL}				0.8	V
Pulse duration, CLK high or low, t_w		25			ns
Setup time, data before CLK↑, t_{su}		16.5			ns
Hold time, data after CLK↑, t_h		12.5			ns
Phase compensation capacitance, C_{comp} (see Note 1)		1			μF
Load resistance, R_L		75			Ω
Operating free-air temperature, T_A	TLC5602C	0		70	°C
	TLC5602M	–55		125	

NOTE 1: The phase compensation capacitor should be connected between COMP and ANLG GND.

electrical characteristics over recommended ranges of supply voltage and operating free-air temperature (unless otherwise noted)

PARAMETER			TEST CONDITIONS			MIN	TYP‡	MAX	UNIT
I_{IH}	High-level input current	Digital inputs	V_I = 5 V					±1	µA
I_{IL}	Low-level input current		V_I = 0 V					±1	µA
I_{ref}	Input reference current		V_{ref} = 4 V					10	µA
V_{FS}	Full-scale analog output voltage		V_{DD} = 5 V,	V_{ref} = 4.02 V		V_{DD}−15	V_{DD}	V_{DD}+15	mV
V_{ZS}	Zero-scale analog output voltage		V_{DD} = 5 V, T_A = full range§	V_{ref} = 4.02 V,	TLC5602C	3.919	3.98	4.042	V
					TLC5602M	3.919	3.98	4.042	
					TLC5602M	3.919	3.98	4.062	
r_o	Output resistance		T_A = 25°C		TLC5602C	60	80	120	Ω
			T_A = full range§		TLC5602M				
C_i	Input capacitance		f_{clock} = 1 MHz,	T_A = 25°C			15		pF
I_{DD}	Supply current		f_{clock} = 20 MHz,	V_{ref} = V_{DD} − 0.95 V			16	25	mA

‡ All typical values are at V_{DD} = 5 V and T_A = 25°C.
§ Full range for the TLC5602C is 0°C to 70°C, and full range for the TLC5602M is –55°C to 125°C.

operating characteristics over recommended ranges of supply voltage and operating free-air temperature (unless otherwise noted)

PARAMETER		TEST CONDITIONS		MIN	TYP†	MAX	UNIT
$E_{L(adj)}$	Linearity error, best-straight-line	T_A = full range‡	TLC5602C			±0.2%	
		T_A = 25°C	TLC5602M			±0.2%	
		T_A = full range‡				±0.4%	
E_L	Linearity error, end point				±0.15%		
E_D	Linearity error, differential					±0.2%	
G_{diff}	Differential gain	NTSC 40-IRE modulated ramp, f_{clock} = 14.3 MHz, Z_L ≥ 75 kΩ			0.7%		
f_{diff}	Differential phase				0.4°		
t_{pd}	Propagation delay time, CLK to analog output	C_L = 10 pF			25		ns
t_s	Settling time to within 1/2 LSB	C_L = 10 pF			30		ns

† All typical values are at V_{DD} = 5 V and T_A = 25°C.
‡ Full range for the TLC5602C is 0°C to 70°C, and full range for the TLC5602M is –55°C to 125°C.

PARAMETER MEASUREMENT INFORMATION

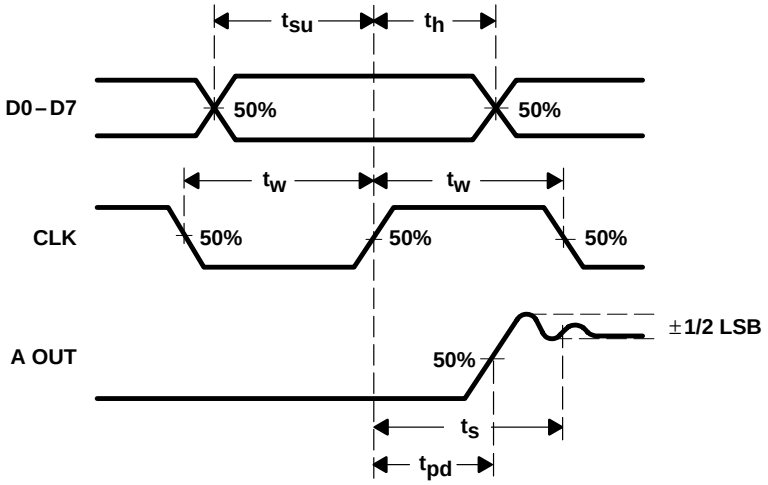

Figure 1. Voltage Waveforms

TYPICAL CHARACTERISTICS

IDEAL CONVERSION CHARACTERISTICS

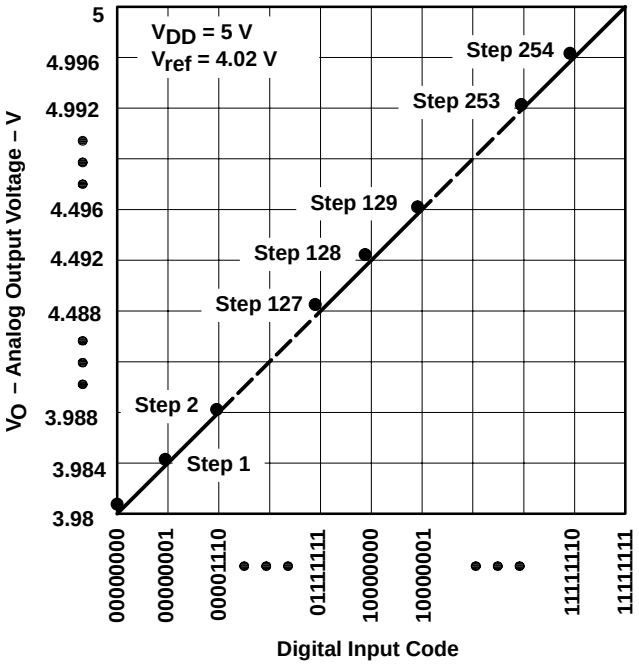

Figure 2

BEST-STRAIGHT-LINE LINEARITY ERROR

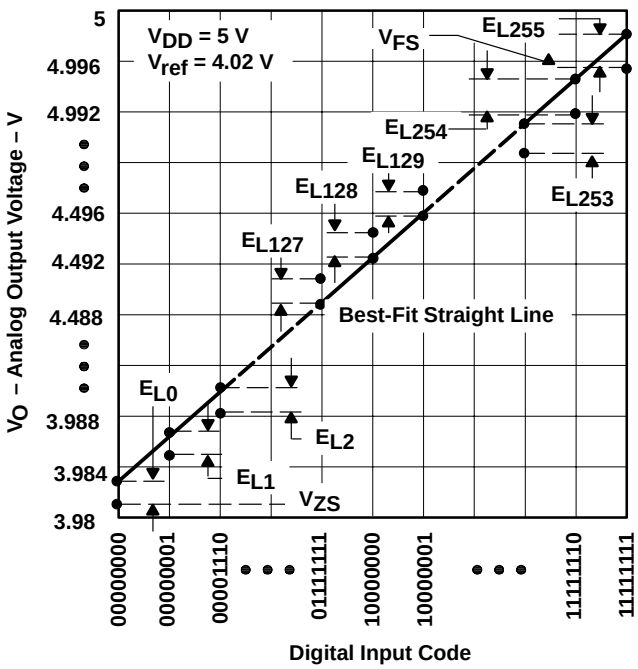

Figure 3

ZERO-SCALE OUTPUT VOLTAGE vs FREE-AIR TEMPERATURE

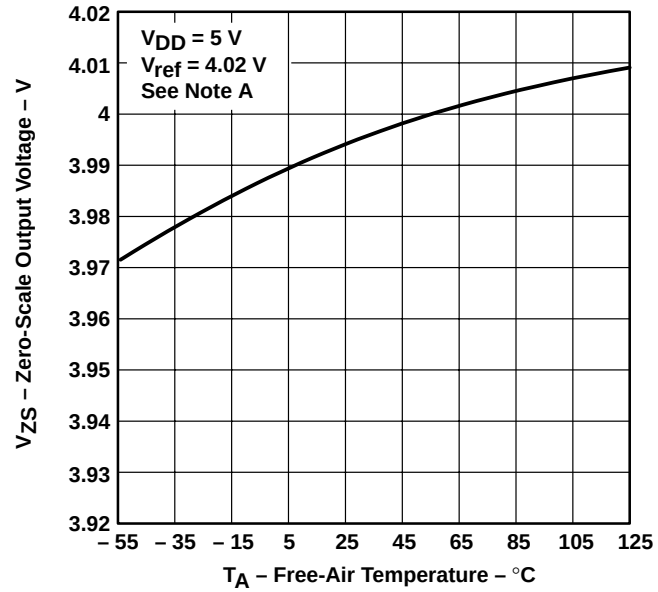

NOTE A: V_{ref} is relative to ANLG GND. V_{DD} is the voltage between ANLG V_{DD} and DGTL V_{DD} tied together and ANLG GND and DGTL GND tied together.

Figure 4

OUTPUT RESISTANCE vs FREE-AIR TEMPERATURE

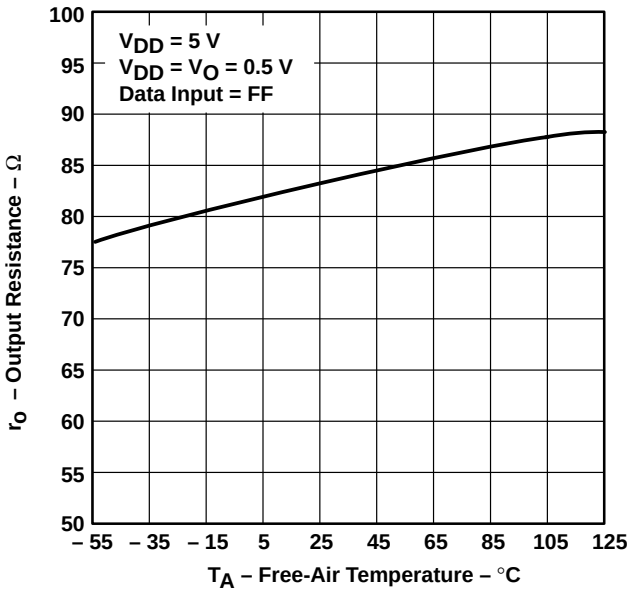

Figure 5

TYPICAL CHARACTERISTICS

SUPPLY CURRENT vs FREE-AIR TEMPERATURE

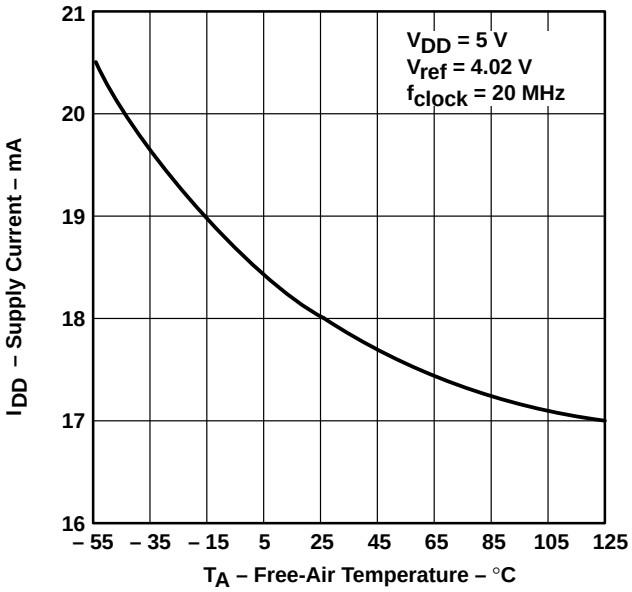

Figure 6

ZERO-SCALE OUTPUT VOLTAGE vs REFERENCE VOLTAGE

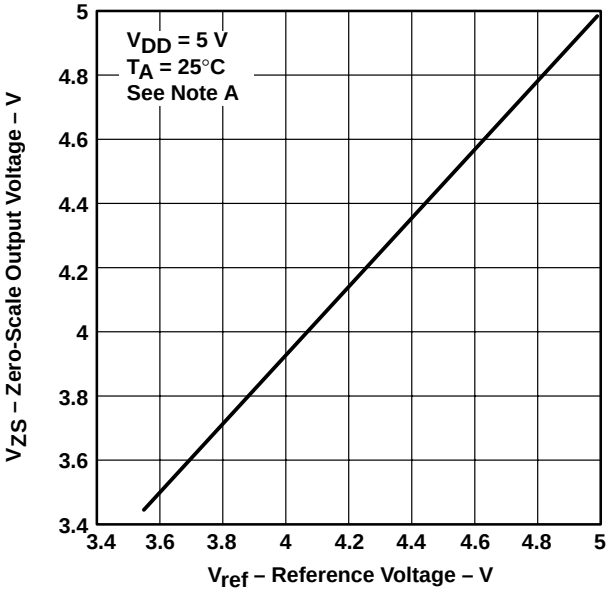

NOTE A: V_{ref} is relative to ANLG GND. V_{DD} is the voltage between ANLG V_{DD} and DGTL V_{DD} tied together and ANLG GND and DGTL GND tied together.

Figure 7

APPLICATION INFORMATION

The following design recommendations benefit the TLC5602 user:

- Physically separate and shield external analog and digital circuitry as much as possible to reduce system noise.
- Use RF breadboarding or RF printed-circuit-board (PCB) techniques throughout the evaluation and production process.
- Since ANLG GND and DGTL GND are not connected internally, these terminals need to be connected externally. With breadboards, these ground lines should connect to the power-supply ground through separate leads with proper supply bypassing. A good method is to use a separate twisted pair for the analog and digital supply lines to minimize noise pickup.

  Use wide ground leads or a ground plane on the PCB layouts to minimize parasitic inductance and resistance. The ground plane is the better choice for noise reduction.
- ANLG V_{DD} and DGTL V_{DD} are also separated internally, so they must connect externally. These external PCB leads should also be made as wide as possible. Place a ferrite bead or equivalent inductance in series with ANLG V_{DD} and the decoupling capacitor as close to the device terminals as possible before the ANLG V_{DD} and DGTL V_{DD} leads are connected together on the board.
- Decouple ANLG V_{DD} to ANLG GND and DGTL V_{DD} to DGTL GND with a 1-μF and 0.01-μF capacitor, respectively, as close as possible to the appropriate device terminals. A ceramic chip capacitor is recommended for the 0.01-μF capacitor.
- Connect the phase compensation capacitor between COMP and ANLG GND with as short a lead-in as possible.
- The no-connection (NC) terminals on the small-outline package should be connected to ANLG GND.
- Shield ANLG V_{DD}, ANLG GND, and A OUT from the high-frequency terminals CLK and D7–D0. Place ANLG GND traces on both sides of the A OUT trace on the PCB.

PACKAGING INFORMATION

Orderable part number	Status (1)	Material type (2)	Package | Pins	Package qty | Carrier	RoHS (3)	Lead finish/ Ball material (4)	MSL rating/ Peak reflow (5)	Op temp (°C)	Part marking (6)
TLC5602CDW	Active	Production	SOIC (DW) | 20	25 | TUBE	Yes	NIPDAU	Level-1-260C-UNLIM	0 to 70	TLC5602C
TLC5602CDW.A	Active	Production	SOIC (DW) | 20	25 | TUBE	Yes	NIPDAU	Level-1-260C-UNLIM	0 to 70	TLC5602C
TLC5602CDWR	Active	Production	SOIC (DW) | 20	2000 | LARGE T&R	Yes	NIPDAU	Level-1-260C-UNLIM	0 to 70	TLC5602C
TLC5602CDWR.A	Active	Production	SOIC (DW) | 20	2000 | LARGE T&R	Yes	NIPDAU	Level-1-260C-UNLIM	0 to 70	TLC5602C

(1) **Status:** For more details on status, see our product life cycle.

(2) **Material type:** When designated, preproduction parts are prototypes/experimental devices, and are not yet approved or released for full production. Testing and final process, including without limitation quality assurance, reliability performance testing, and/or process qualification, may not yet be complete, and this item is subject to further changes or possible discontinuation. If available for ordering, purchases will be subject to an additional waiver at checkout, and are intended for early internal evaluation purposes only. These items are sold without warranties of any kind.

(3) **RoHS values:** Yes, No, RoHS Exempt. See the TI RoHS Statement for additional information and value definition.

(4) **Lead finish/Ball material:** Parts may have multiple material finish options. Finish options are separated by a vertical ruled line. Lead finish/Ball material values may wrap to two lines if the finish value exceeds the maximum column width.

(5) **MSL rating/Peak reflow:** The moisture sensitivity level ratings and peak solder (reflow) temperatures. In the event that a part has multiple moisture sensitivity ratings, only the lowest level per JEDEC standards is shown. Refer to the shipping label for the actual reflow temperature that will be used to mount the part to the printed circuit board.

(6) **Part marking:** There may be an additional marking, which relates to the logo, the lot trace code information, or the environmental category of the part.

Multiple part markings will be inside parentheses. Only one part marking contained in parentheses and separated by a "~" will appear on a part. If a line is indented then it is a continuation of the previous line and the two combined represent the entire part marking for that device.

Important Information and Disclaimer: The information provided on this page represents TI's knowledge and belief as of the date that it is provided. TI bases its knowledge and belief on information provided by third parties, and makes no representation or warranty as to the accuracy of such information. Efforts are underway to better integrate information from third parties. TI has taken and continues to take reasonable steps to provide representative and accurate information but may not have conducted destructive testing or chemical analysis on incoming materials and chemicals. TI and TI suppliers consider certain information to be proprietary, and thus CAS numbers and other limited information may not be available for release.

In no event shall TI's liability arising out of such information exceed the total purchase price of the TI part(s) at issue in this document sold by TI to Customer on an annual basis.

TUBE

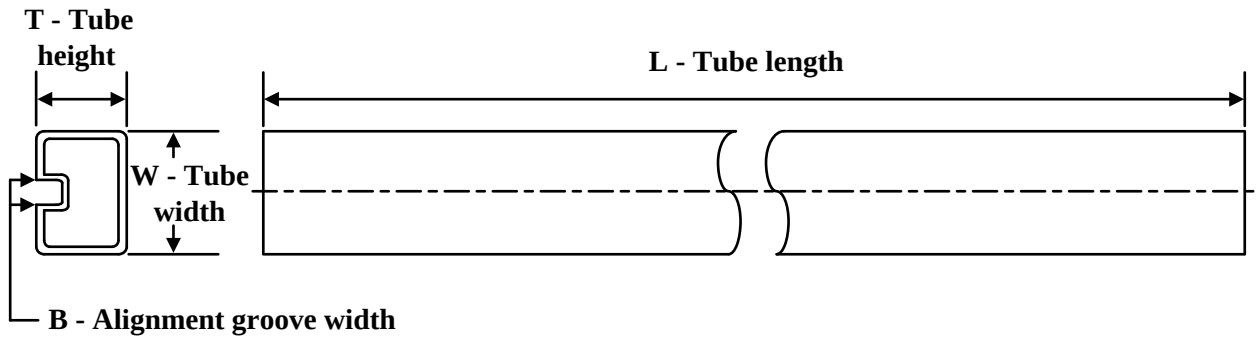

*All dimensions are nominal

Device	Package Name	Package Type	Pins	SPQ	L (mm)	W (mm)	T (µm)	B (mm)
TLC5602CDW	DW	SOIC	20	25	506.98	12.7	4826	6.6
TLC5602CDW.A	DW	SOIC	20	25	506.98	12.7	4826	6.6

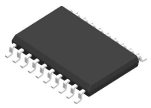

PACKAGE OUTLINE

DW0020A

SOIC - 2.65 mm max height

SOIC

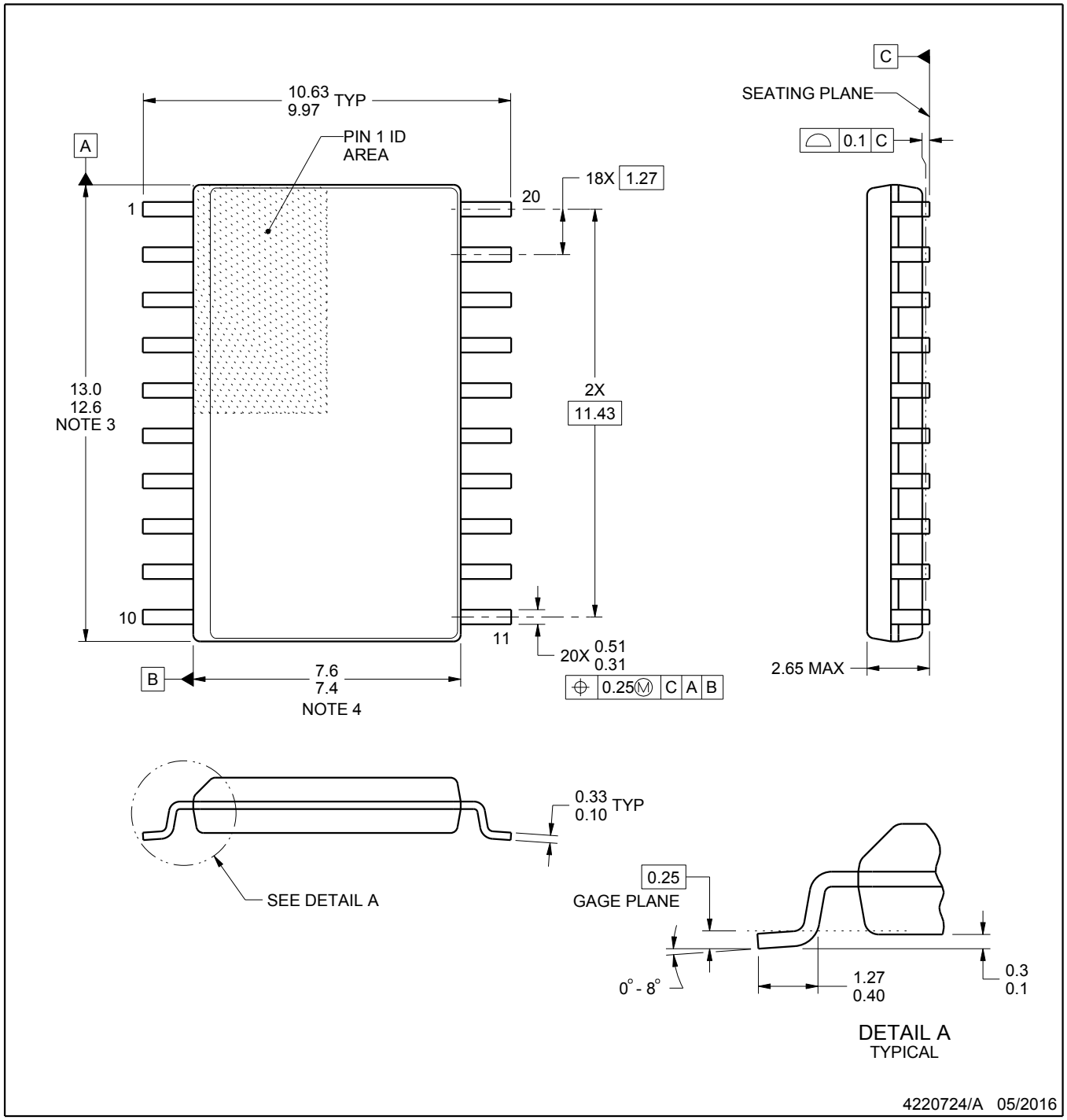

NOTES:

1. All linear dimensions are in millimeters. Dimensions in parenthesis are for reference only. Dimensioning and tolerancing per ASME Y14.5M.
2. This drawing is subject to change without notice.
3. This dimension does not include mold flash, protrusions, or gate burrs. Mold flash, protrusions, or gate burrs shall not exceed 0.15 mm per side.
4. This dimension does not include interlead flash. Interlead flash shall not exceed 0.43 mm per side.
5. Reference JEDEC registration MS-013.

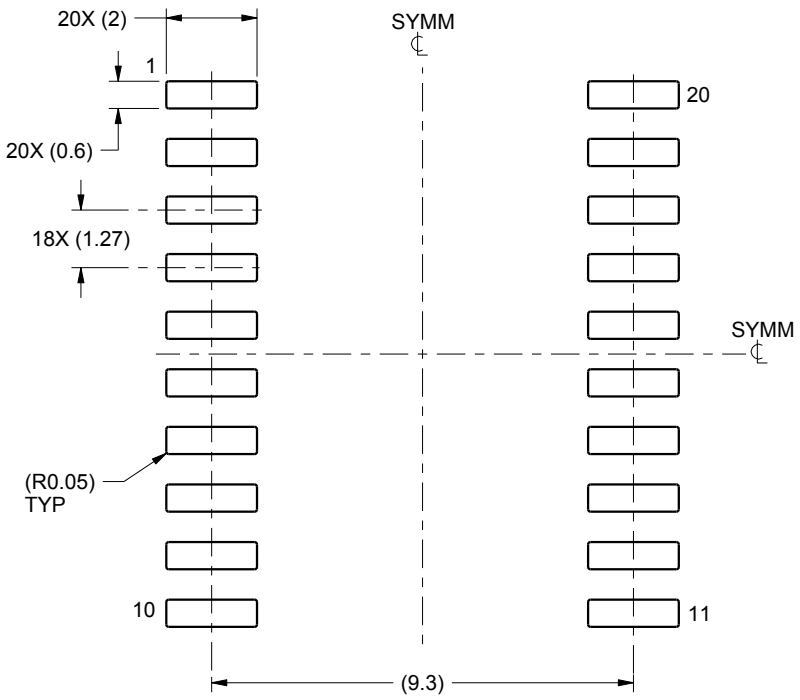

LAND PATTERN EXAMPLE
SCALE:6X

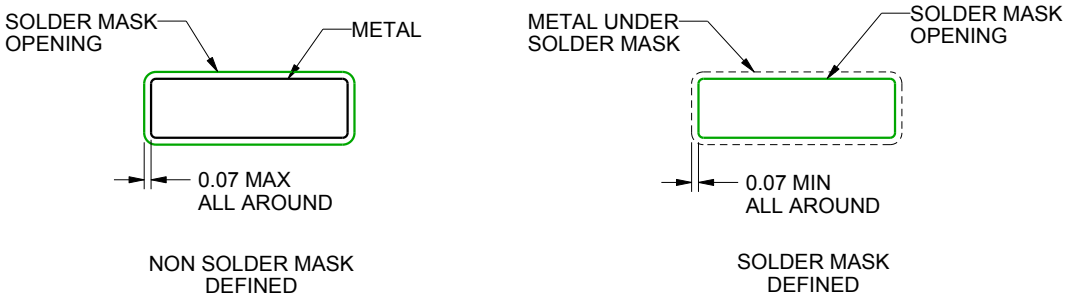

SOLDER MASK DETAILS

4220724/A 05/2016

NOTES: (continued)

6. Publication IPC-7351 may have alternate designs.
7. Solder mask tolerances between and around signal pads can vary based on board fabrication site.

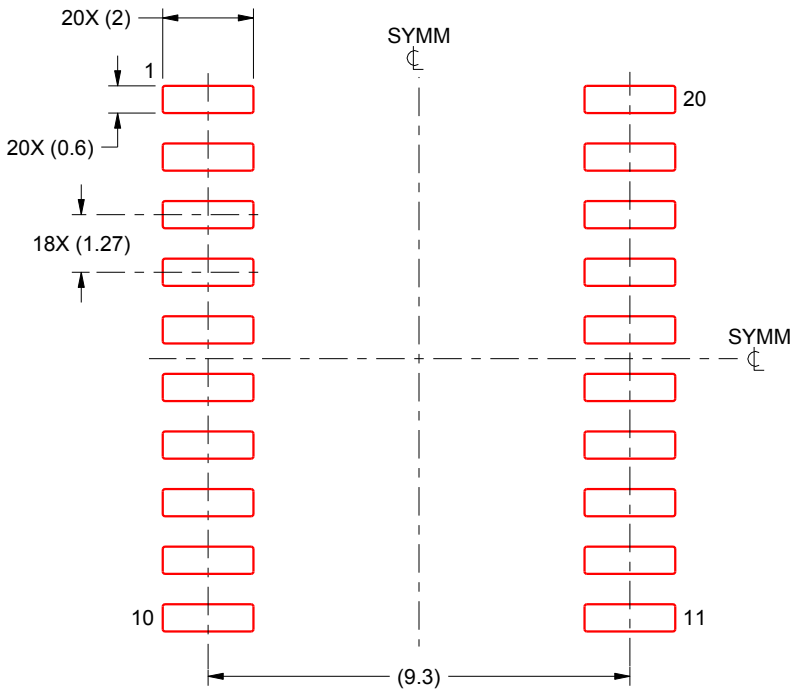

SOLDER PASTE EXAMPLE
BASED ON 0.125 mm THICK STENCIL
SCALE:6X

4220724/A 05/2016

NOTES: (continued)

8. Laser cutting apertures with trapezoidal walls and rounded corners may offer better paste release. IPC-7525 may have alternate design recommendations.
9. Board assembly site may have different recommendations for stencil design.

IMPORTANT NOTICE AND DISCLAIMER

TI PROVIDES TECHNICAL AND RELIABILITY DATA (INCLUDING DATASHEETS), DESIGN RESOURCES (INCLUDING REFERENCE DESIGNS), APPLICATION OR OTHER DESIGN ADVICE, WEB TOOLS, SAFETY INFORMATION, AND OTHER RESOURCES “AS IS” AND WITH ALL FAULTS, AND DISCLAIMS ALL WARRANTIES, EXPRESS AND IMPLIED, INCLUDING WITHOUT LIMITATION ANY IMPLIED WARRANTIES OF MERCHANTABILITY, FITNESS FOR A PARTICULAR PURPOSE OR NON-INFRINGEMENT OF THIRD PARTY INTELLECTUAL PROPERTY RIGHTS.

These resources are intended for skilled developers designing with TI products. You are solely responsible for (1) selecting the appropriate TI products for your application, (2) designing, validating and testing your application, and (3) ensuring your application meets applicable standards, and any other safety, security, regulatory or other requirements.

These resources are subject to change without notice. TI grants you permission to use these resources only for development of an application that uses the TI products described in the resource. Other reproduction and display of these resources is prohibited. No license is granted to any other TI intellectual property right or to any third party intellectual property right. TI disclaims responsibility for, and you fully indemnify TI and its representatives against any claims, damages, costs, losses, and liabilities arising out of your use of these resources.

TI’s products are provided subject to TI’s Terms of Sale, TI’s General Quality Guidelines, or other applicable terms available either on ti.com or provided in conjunction with such TI products. TI’s provision of these resources does not expand or otherwise alter TI’s applicable warranties or warranty disclaimers for TI products. Unless TI explicitly designates a product as custom or customer-specified, TI products are standard, catalog, general purpose devices.

TI objects to and rejects any additional or different terms you may propose.

Copyright © 2026, Texas Instruments Incorporated

Last updated 10/2025