TEXAS INSTRUMENTS
TMP451-Q1
ZHCSCV4C – OCTOBER 2014 – REVISED APRIL 2021

具有 η 因子、失调电压校正、串联电阻抵消和可编程数字滤波器的 TMP451-Q1 ±1°C 远程和本地温度传感器

1 特性

- 符合汽车应用要求
- 具有符合 AEC-Q100 标准的下列特性：
  - 器件温度等级 1：-40°C 至 125°C 环境工作温度范围
- 本地和远程二极管传感器精度为 ±1°C
- 本地和远程通道的分辨率为 0.0625°C
- 1.7V 至 3.6V 电源和逻辑电压范围
- 27µA 运行电流，3µA 关断电流
- 串联电阻抵消
- η 因子和偏移校正
- 可编程数字滤波器
- 二极管故障检测
- 双线和 SMBus™ 串行接口
- 8 引脚 WSON (WDFN) 封装
  - 具有可润湿侧翼的 2.50mm × 2.50mm 封装 (DQW)
  - 2.00mm × 2.00mm (DQF)

2 应用

- 汽车信息娱乐系统
- 电子控制单元 (ECU) 处理器温度监视
- 电子控制单元 (TCM) 处理器温度监视
- 电子控制单元 (BCM) 处理器温度监视
- LED 前灯温度控制

3 说明

TMP451-Q1 器件是一款高精度、低功耗远程温度传感器监视器，内置一个本地温度传感器。这类远程温度传感器通常采用低成本离散式 NPN 或 PNP 晶体管，或者基板热晶体管或二极管，这些器件都是微处理器、微控制器或 FPGA 的组成部件。对于本地和远程传感器，此温度表示方式为 12 位数字编码，分辨率为 0.0625°C。对于本地和远程温度传感器，在典型运行范围内，温度精度为 ±1°C（最大值）。此两线制串口接受 SMBus 通信协议。

诸如串联电阻抵消、可编程非线性因子（η 因子）、可编程偏移、可编程温度限制和一个可编程数字滤波器等的高级特性被组合在一起，实现了一个具有更佳准确度和抗扰度的稳健耐用热度监控解决方案。

TMP451-Q1 器件是在各种汽车子系统中进行多位置高精度温度测量的理想选择。TMP451-Q1 采用可润湿侧翼 WSON 封装，可提供针对可焊性的视觉指示器以缩短自动视觉检测 (AVI) 时间。此器件的额定运行电源电压范围为 1.7V 至 3.6V，额定工作温度范围为 -40°C 至 125°C。

器件信息(1)

器件型号	封装	封装尺寸（标称值）
TMP451-Q1	WSON (8)	2.00mm × 2.00mm
	WSON (8)	2.50mm × 2.50mm

(1) 如需了解所有可用封装，请参阅数据表末尾的可订购产品附录。

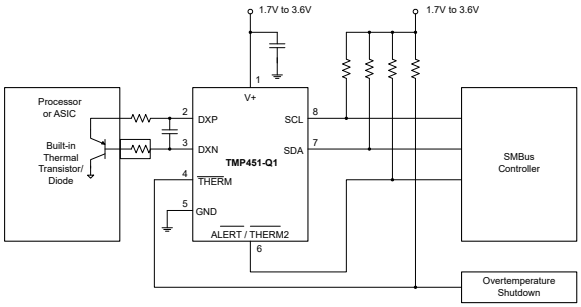

典型应用

本文档旨在为方便起见，提供有关 TI 产品中文版本的信息，以确认产品的概要。有关适用的官方英文版本的最新信息，请访问 www.ti.com，其内容始终优先。TI 不保证翻译的准确性和有效性。在实际设计之前，请务必参考最新版本的英文版本。

Table of Contents

1 特性 1
2 应用 1
3 说明 1
4 Revision History 2
5 Pin Configuration and Functions 3
6 Specifications 4
6.1 Absolute Maximum Ratings 4
6.2 ESD Ratings 4
6.3 Recommended Operating Conditions 4
6.4 Thermal Information 4
6.5 Electrical Characteristics 5
6.6 Timing Characteristics for 图 6-1 6
6.7 Typical Characteristics 7
7 Detailed Description 9
7.1 Overview 9
7.2 Functional Block Diagram 9
7.3 Feature Description 9
7.4 Device Functional Modes 14
7.5 Programming 14
7.6 Register Map 17
8 Application and Implementation 23
8.1 Application Information 23
8.2 Typical Application 23
9 Power Supply Recommendations 26
10 Layout 27
10.1 Layout Guidelines 27
10.2 Layout Example 28
11 Device and Documentation Support 29
11.1 接收文档更新通知 29
11.2 支持资源 29
11.3 Trademarks 29
11.4 静电放电警告 29
11.5 术语表 29
12 Mechanical, Packaging, and Orderable Information 29

4 Revision History

Changes from Revision B (June 2019) to Revision C (April 2021)	Page
• 分离了 DQF 和 DQW 可润湿侧翼封装	1
• 添加了可润湿侧翼封装的说明	1
• Added separate Pinout for DQW wettable flanks package	3

Changes from Revision A (January 2019) to Revision B (June 2019)	Page
• 添加了 DQW 封装	1
• Added DQW (WSON) package information to the *Thermal Information* table	4

Changes from Revision * (October 2014) to Revision A (January 2019)	Page
• 将“预发布 DQF 可订购产品”更改为“有效”	1
• Moved storage temperature to the *Absolute Maximum Ratings* table	4
• Moved the AEC-Q100 ESD classification levels to the *ESD Ratings* table	4
• Changed *TMP451-Q1 SMBus Addresses* table	16
• Added *Receiving Notification of Documentation Updates* section	29
• Added *Community Resources* section	29

Copyright © 2022 Texas Instruments Incorporated

5 Pin Configuration and Functions

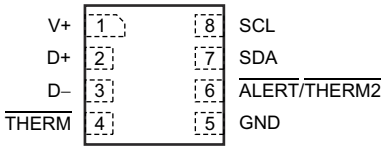

图 5-1. DQF Package 8-Pin WSON Top View

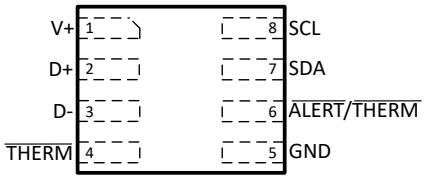

图 5-2. DQW with Wettable Flanks Packages 8-Pin WSON Top View

表 5-1. Pin Functions

PIN		TYPE	DESCRIPTION
NAME	NO.		
ALERT/ THERM2	6	Digital output	Interrupt or SMBus alert output. Can be configured as a second THERM output. Open-drain; requires pullup resistor to voltage between 1.7 V and 3.6 V.
D –	3	Analog input	Negative connection to remote temperature sensor.
D+	2	Analog input	Positive connection to remote temperature sensor.
GND	5	Ground	Supply ground connection.
SCL	8	Digital input	Serial clock line for SMBus. Input; requires pullup resistor to voltage between 1.7 V and 3.6 V if driven by open-drain output.
SDA	7	Bidirectional digital input-output	Serial data line for SMBus. Open-drain; requires pullup resistor to voltage between 1.7 V and 3.6 V.
THERM	4	Digital output	Thermal shutdown or fan-control pin. Open-drain; requires pullup resistor to voltage between 1.7 V and 3.6 V.
V+	1	Power supply	Positive supply voltage, 1.7 V to 3.6 V.

Copyright © 2022 Texas Instruments Incorporated

6 Specifications

6.1 Absolute Maximum Ratings

Over operating free-air temperature range, unless otherwise noted.(1)

		MIN	MAX	UNIT
Power supply	V+	–0.3	3.6	V
Input voltage	$\overline{\text{THERM}}$, $\overline{\text{ALERT}}$/ $\overline{\text{THERM2}}$, SDA and SCL only	–0.3	3.6	V
	D+ only	–0.3	(V+) + 0.3	V
	D– only	–0.3	0.3	V
Input current			10	mA
Operating temperature		–55	127	°C
Junction temperature ($T_J$max)			150	°C
Storage temperature, T_{stg}		–60	150	°C

(1) Stresses above these ratings may cause permanent damage. Exposure to absolute maximum conditions for extended periods may degrade device reliability. These are stress ratings only, and functional operation of the device at these or any other conditions beyond those specified is not implied.

6.2 ESD Ratings

				VALUE	UNIT
$V_{(ESD)}$	Electrostatic discharge	Human body model (HBM), per AEC Q100-002(1) HBM ESD Classification Level 2		±2000	V
		Charged device model (CDM), per AEC Q100-011 CDM ESD Classification Level C4B	Corner pins (1, 4, 5, and 8)	±750	
			Other pins	±500	

(1) AEC Q100-002 indicates HBM stressing is done in accordance with the ANSI/ESDA/JEDEC JS-001 specification.

6.3 Recommended Operating Conditions

over operating free-air temperature range (unless otherwise noted)

		MIN	NOM	MAX	UNIT
	Supply voltage	1.7	3.3	3.6	V
T_A	Operating free-air temperature	–40		125	°C

6.4 Thermal Information

THERMAL METRIC(1)		TMP451-Q1		UNIT
		DQF (WSON)	DQW (WSON)	
		8 PINS	8 PINS	
$R_{\theta JA}$	Junction-to-ambient thermal resistance	171.3	128.5	°C/W
$R_{\theta JC(top)}$	Junction-to-case (top) thermal resistance	81.4	67.9	°C/W
$R_{\theta JB}$	Junction-to-board thermal resistance	137.9	56.9	°C/W
ψ_{JT}	Junction-to-top characterization parameter	3.9	4.4	°C/W
ψ_{JB}	Junction-to-board characterization parameter	140	56.5	°C/W
$R_{\theta JC(bot)}$	Junction-to-case (bottom) thermal resistance	—	—	°C/W

(1) For more information about traditional and new thermal metrics, see the *Semiconductor and IC Package Thermal Metrics* application report (SPRA953).

Copyright © 2022 Texas Instruments Incorporated

6.5 Electrical Characteristics

At T_A = –40°C to 125°C and V+ = 3.3 V, unless otherwise noted.

PARAMETER		CONDITIONS	MIN	TYP	MAX	UNIT
TEMPERATURE ERROR						
TE_{LOCAL}	Local temperature sensor	T_A = 0°C to 70°C		±0.25	±1	°C
		T_A = –40°C to 125°C		±1	±2	°C
TE_{REMOTE}	Remote temperature sensor(1)	T_A = 0°C to 70°C, T_D = –55°C to 150°C		±0.25	±1	°C
		T_A = –40°C to 100°C, T_D = –55°C to 150°C		±1	±2	°C
		T_A = –40°C to 125°C, T_D = –55°C to 150°C		±2	±4	°C
	Remote temperature sensor versus supply (local or remote)	V+ = 1.7 V to 3.6 V		±0.1	±0.25	°C/V
TEMPERATURE MEASUREMENT						
	Conversion time	One-Shot mode, local and remote total		31	34	ms
	Local temperature sensor resolution			12		Bits
	Remote temperature sensor resolution			12		Bits
	Remote sensor source current, high	Series resistance 1 kΩ max		120		µA
	Remote sensor source current, medium			45		µA
	Remote sensor source current, low			7.5		µA
η	Remote transistor ideality factor	TMP451-Q1 optimized ideality factor		1.008		
SMBus INTERFACE						
V_{IH}	High-level input voltage		1.4			V
V_{IL}	Low-level input voltage				0.45	V
	Hysteresis			200		mV
	SMBus output low sink current		6			mA
V_{OL}	Low-level output voltage	I_O = 6 mA		0.15	0.4	V
	Logic input current	0 V ⩽ V_I ⩽ 3.6 V	–1		1	µA
	SMBus input capacitance			3		pF
	SMBus clock frequency		0.01		2.5	MHz
	SMBus timeout		20	25	30	ms
	SCL falling edge to SDA valid time				1	µs

Copyright © 2022 Texas Instruments Incorporated

At T_A = –40°C to 125°C and V+ = 3.3 V, unless otherwise noted.

PARAMETER		CONDITIONS	MIN	TYP	MAX	UNIT
DIGITAL OUTPUTS (THERM, ALERT/ THERM2)						
V_{OL}	Low-level output voltage	I_O = 6 mA		0.15	0.4	V
I_{OH}	High-level output leakage current	V_O = V+			1	µA
POWER SUPPLY						
$V_{(V+)}$	Specified voltage range		1.7		3.6	V
I_Q	Quiescent current	0.0625 conversions per second		27	40	µA
		16 conversions per second		165	250	µA
		32 conversions per second		300	450	µA
		Serial bus inactive, shutdown mode		3	8	µA
		Serial bus active, f_S = 400 kHz, shutdown mode		90		µA
		Serial bus active, f_S = 2.5 MHz, shutdown mode		350		µA
POR	Power-on reset threshold			1.2	1.55	V

(1) Tested with less than 5-Ω effective series resistance and 100-pF differential input capacitance.

6.6 Timing Characteristics for 图 6-1

PARAMETER		FAST MODE		HIGH-SPEED MODE		UNIT
		MIN	MAX	MIN	MAX	
$f_{(SCL)}$	SCL operating frequency	0.001	0.4	0.001	2.5	MHz
$t_{(BUF)}$	Bus free time between STOP and START Condition	1300		260		ns
$t_{(HDSTA)}$	Hold time after repeated START condition. After this period, the first clock is generated.	600		160		ns
$t_{(SUSTA)}$	Repeated START condition setup time	600		160		ns
$t_{(SUSTO)}$	STOP condition setup time	600		160		ns
$t_{(HDDAT)}$	Data hold time	0	900	0	150	ns
$t_{(SUDAT)}$	Data setup time	100		30		ns
$t_{(LOW)}$	SCL clock LOW period	1300		260		ns
$t_{(HIGH)}$	SCL clock HIGH period	600		60		ns
t_F, t_R – SDA	Data fall and rise time		300		80	ns
t_F, t_R – SCL	Clock fall and rise time		300		40	ns
t_R	Rise time for SCL ≤ 100 kHz		1000			ns

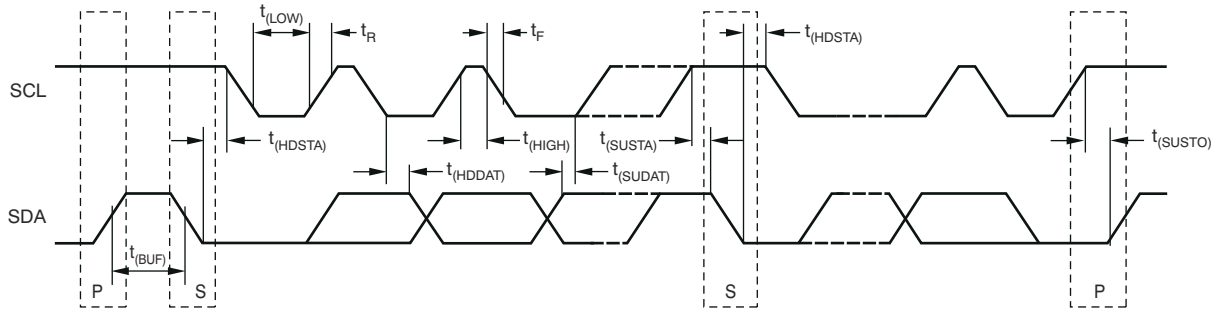

图 6-1. Two-Wire Timing Diagram

Copyright © 2022 Texas Instruments Incorporated

6.7 Typical Characteristics

At T_A = 25°C and V+ = 3.3 V, unless otherwise noted.

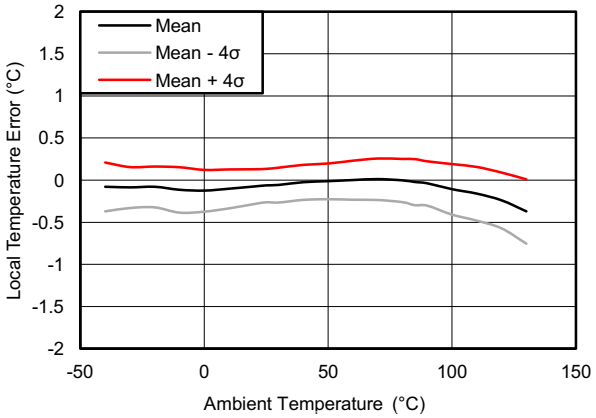

图 6-2. Local Temperature Error vs. Temperature

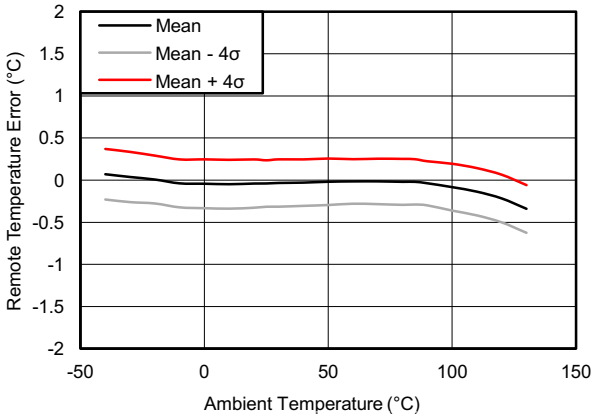

图 6-3. Remote Temperature Error vs. Temperature

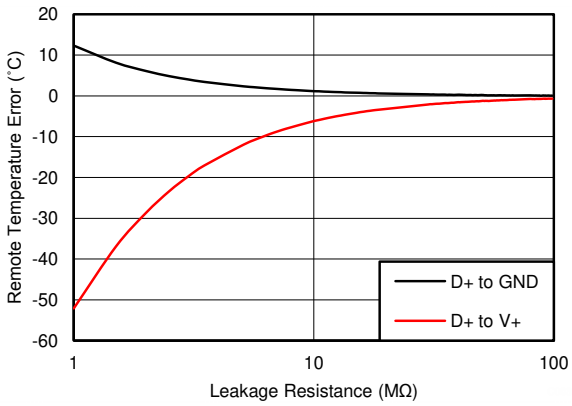

图 6-4. Remote Temperature Error vs. Leakage Resistance

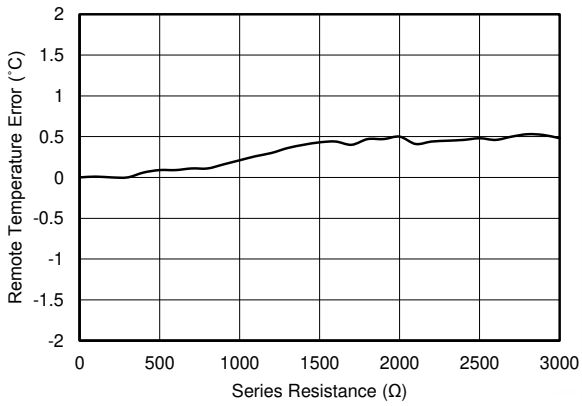

图 6-5. Remote Temperature Error vs. Series Resistance

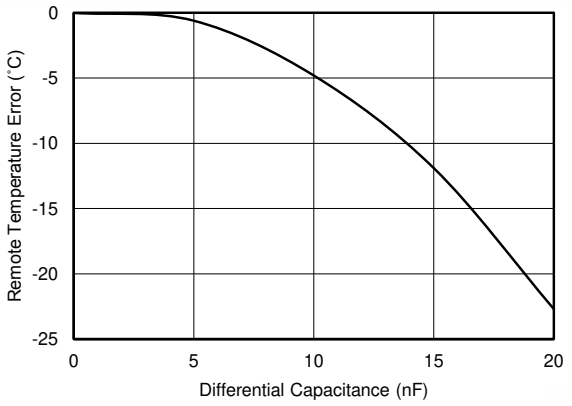

图 6-6. Remote Temperature Error vs. Differential Capacitance

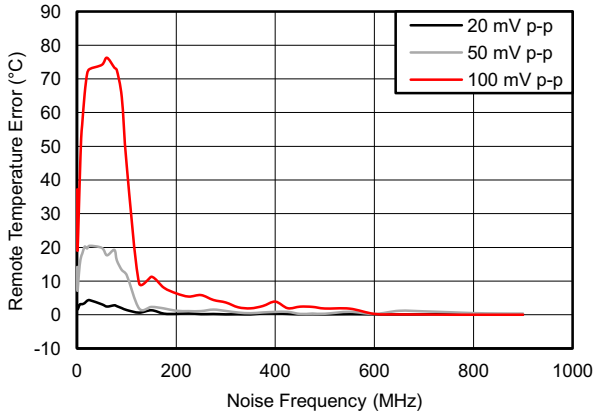

图 6-7. Remote Temperature Error vs. Remote Channel Noise Frequency

Copyright © 2022 Texas Instruments Incorporated

6.7 Typical Characteristics (continued)

At T_A = 25°C and V+ = 3.3 V, unless otherwise noted.

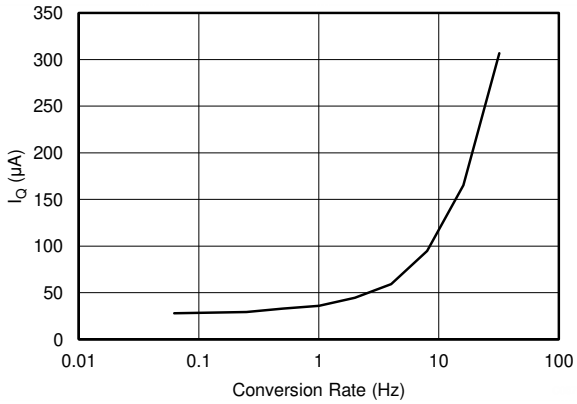

图 6-8. Quiescent Current vs. Conversion Rate

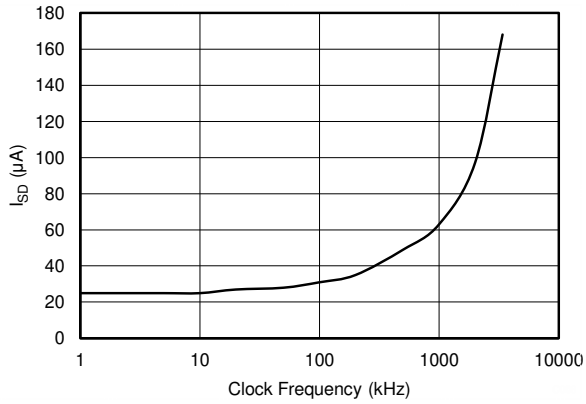

图 6-9. Shutdown Quiescent Current vs. SCL Clock Frequency

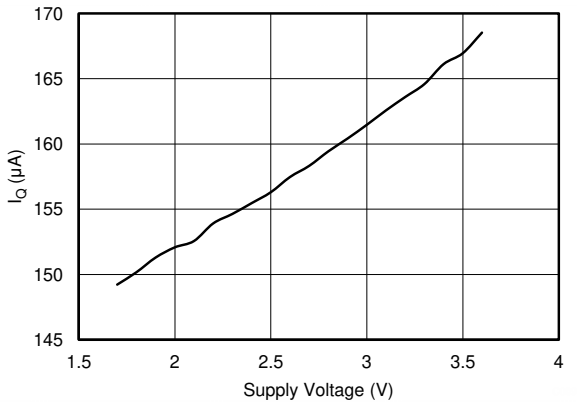

图 6-10. Quiescent Current vs. Supply Voltage (At Default Conversion Rate of 16 Conversions per Second)

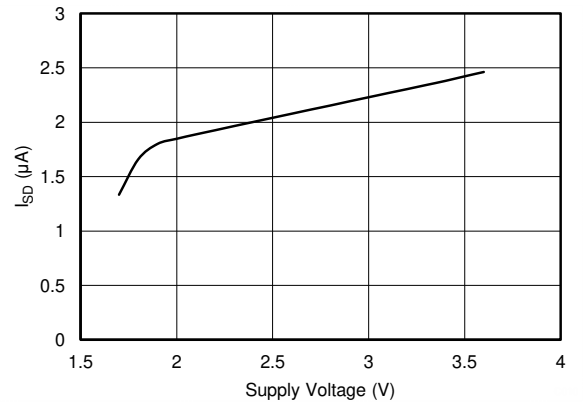

图 6-11. Shutdown Quiescent Current vs. Supply Voltage

Copyright © 2022 Texas Instruments Incorporated

7 Detailed Description

7.1 Overview

The TMP451-Q1 device is a digital temperature sensor that combines a local temperature measurement channel and a remote-junction temperature measurement channel in a single DFN-8 package. The device is two-wire- and SMBus-interface compatible, and is specified over a temperature range of –40°C to 125°C. The TMP451-Q1 device also contains multiple registers for programming and holding configuration settings, temperature limits, and temperature measurement results.

7.2 Functional Block Diagram

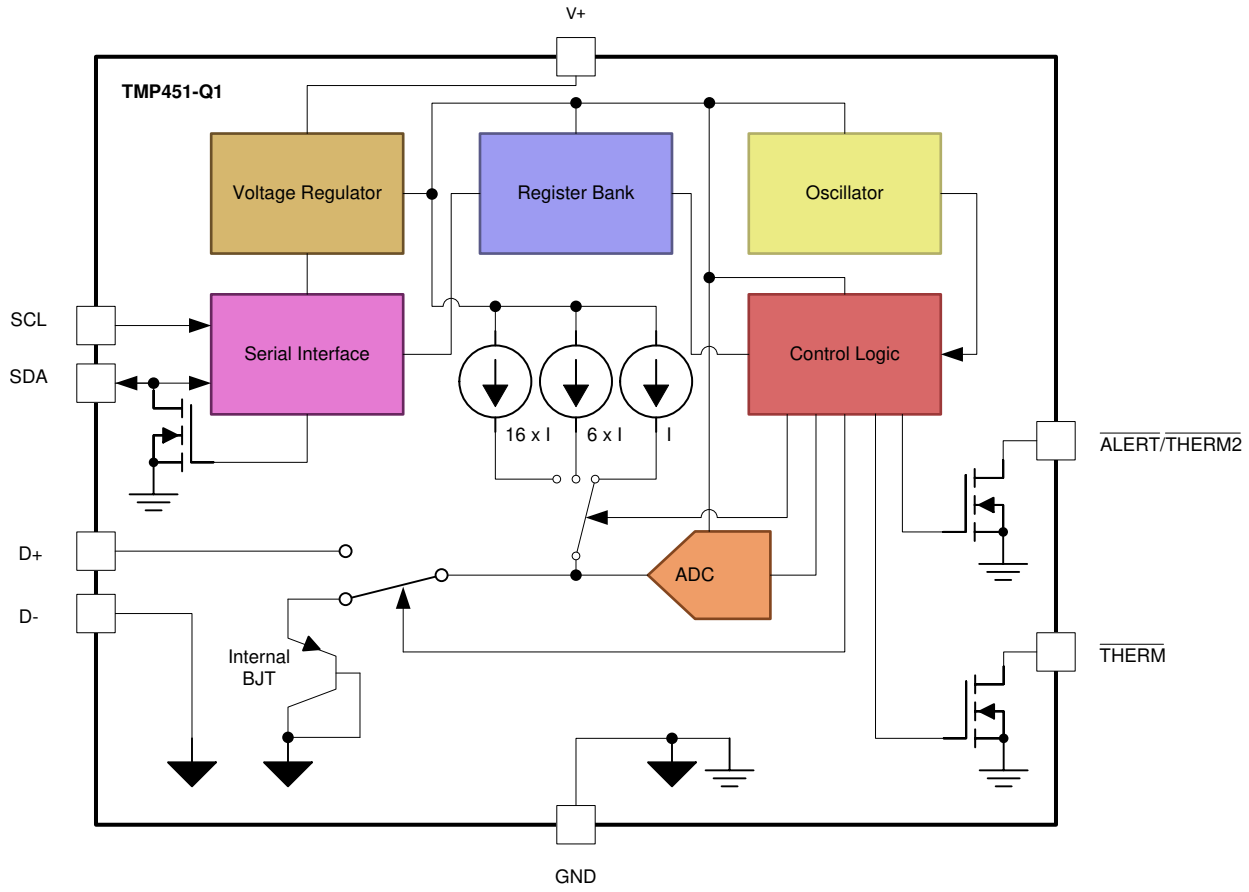

7.3 Feature Description

7.3.1 Temperature Measurement Data

The local and remote temperature sensors have a resolution of 12 bits (0.0625°C). Temperature data that result from conversions within the default measurement range are represented in binary form, as shown in the *Standard Binary* column of 表 7-1. Any temperature below 0°C results in a data value of 0 (00h). Likewise, temperatures above 127°C result in a value of 127 (7Fh). The device can be set to measure over an extended temperature range by changing bit 2 (RANGE) of configuration register from low to high. The change in measurement range and data format from standard binary to extended binary occurs at the next temperature conversion. For data captured in the extended temperature range configuration, an offset of 64 (40h) is added to the standard binary value, as shown in the *EXTENDED BINARY* column of 表 7-1. This configuration allows measurement of temperatures as low as –64°C, and as high as 191°C; however, most temperature-sensing diodes only measure with the range of –55°C to 150°C. Additionally, the TMP451-Q1 is specified only for ambient temperatures ranging from –40°C to 125°C; parameters in the *Absolute Maximum Ratings* table must be observed.

Copyright © 2022 Texas Instruments Incorporated

表 7-1. Temperature Data Format (Local and Remote Temperature High Bytes)

TEMPERATURE (°C)	LOCAL AND REMOTE TEMPERATURE REGISTER HIGH BYTE VALUE (1°C RESOLUTION)			
	STANDARD BINARY(1)		EXTENDED BINARY(2)	
	BINARY	HEX	BINARY	HEX
–64	0000 0000	00	0000 0000	00
–50	0000 0000	00	0000 1110	0E
–25	0000 0000	00	0010 0111	27
0	0000 0000	00	0100 0000	40
1	0000 0001	01	0100 0001	41
5	0000 0101	05	0100 0101	45
10	0000 1010	0A	0100 1010	4A
25	0001 1001	19	0101 1001	59
50	0011 0010	32	0111 0010	72
75	0100 1011	4B	1000 1011	8B
100	0110 0100	64	1010 0100	A4
125	0111 1101	7D	1011 1101	BD
127	0111 1111	7F	1011 1111	BF
150	0111 1111	7F	1101 0110	D6
175	0111 1111	7F	1110 1111	EF
191	0111 1111	7F	1111 1111	FF

(1) Resolution is 1°C/count. Negative values produce a read of 0°C.
(2) Resolution is 1°C/count. All values are unsigned with a –64°C offset.

Both local and remote temperature data use two bytes for data storage. The high byte stores the temperature with 1°C resolution. The second or low byte stores the decimal fraction value of the temperature and allows a higher measurement resolution, as shown in 表 7-2. The measurement resolution for both the local and the remote channels is 0.0625°C.

表 7-2. Decimal Fraction Temperature Data Format (Local and Remote Temperature Low Bytes)

TEMP (°C)	TEMPERATURE REGISTER LOW BYTE VALUE (0.0625°C RESOLUTION)(1)	
	STANDARD AND EXTENDED BINARY	HEX
0	0000 0000	00
0.0625	0001 0000	10
0.1250	0010 0000	20
0.1875	0011 0000	30
0.2500	0100 0000	40
0.3125	0101 0000	50
0.3750	0110 0000	60
0.4375	0111 0000	70
0.5000	1000 0000	80
0.5625	1001 0000	90
0.6250	1010 0000	A0
0.6875	1011 0000	B0
0.7500	1100 0000	C0
0.8125	1101 0000	D0
0.8750	1110 0000	E0
0.9385	1111 0000	F0

(1) Resolution is 0.0625°C/count. All possible values are shown.

Copyright © 2022 Texas Instruments Incorporated

7.3.1.1 Standard Binary to Decimal Temperature Data Calculation Example

High-byte conversion (for example, 0111 0011):

Convert the right-justified binary high byte to hexadecimal.

From hexadecimal, multiply the first number by $16^0 = 1$ and the second number by $16^1 = 16$.

The sum equals the decimal equivalent.

0111 0011b → 73h → $(3 \times 16^0) + (7 \times 16^1) = 115$

Low-byte conversion (for example, 0111 0000):

To convert the left-justified binary low-byte to decimal, use bits 7 through 4 and ignore bits 3 through 0 because they do not affect the value of the number.

0111b → $(0 \times 1/2)^1 + (1 \times 1/2)^2 + (1 \times 1/2)^3 + (1 \times 1/2)^4 = 0.4375$

7.3.1.2 Standard Decimal to Binary Temperature Data Calculation Example

For positive temperatures (for example, 20°C):

(20°C) / (1°C/count) = 20 → 14h → 0001 0100

Convert the number to binary code with 8-bit, right-justified format, and MSB = 0 to denote a positive sign.

20°C is stored as 0001 0100 → 14h.

For negative temperatures (for example, –20°C):

(|–20|) / (1°C/count) = 20 → 14h → 0001 0100

Generate the two's complement of a negative number by complementing the absolute value binary number and adding 1.

–20°C is stored as 1110 1100 → ECh.

7.3.2 Series Resistance Cancellation

Series resistance cancellation automatically eliminates the temperature error caused by the resistance of the routing to the remote transistor or by the resistors of the optional external low-pass filter. A total of up to 1 kΩ of series resistance can be cancelled by the TMP451-Q1 device, eliminating the need for additional characterization and temperature offset correction. See 图 6-5, *Remote Temperature Error vs. Series Resistance*, for details on the effects of series resistance on sensed remote temperature error.

7.3.3 Differential Input Capacitance

The TMP451-Q1 device tolerates differential input capacitance of up to 1000 pF with minimal change in temperature error. The effect of capacitance on sensed remote temperature error is shown in 图 6-6, *Remote Temperature Error vs. Differential Capacitance*.

7.3.4 Filtering

Remote junction temperature sensors are usually implemented in a noisy environment. Noise is most often created by fast digital signals, and it can corrupt measurements. The TMP451-Q1 device has a built-in, 65-kHz filter on the inputs of D+ and D– to minimize the effects of noise. However, a bypass capacitor placed differentially across the inputs of the remote temperature sensor is recommended to make the application more robust against unwanted coupled signals. For this capacitor, select a value of between 100 pF and 1 nF. Some applications attain better overall accuracy with additional series resistance; however, this increased accuracy is application-specific. When series resistance is added, the total value should not be greater than 1 kΩ. If filtering is required, suggested component values are 100 pF and 50 Ω on each input; exact values are application-specific.

Copyright © 2022 Texas Instruments Incorporated

Additionally, a digital filter is available for the remote temperature measurements to further reduce the effect of noise. This filter is programmable and has two levels when enabled. Level 1 performs a moving average of four consecutive samples. Level 2 performs a moving average of eight consecutive samples. The value stored in the remote temperature result register is the output of the digital filter, and the $\overline{\text{ALERT}}$ and $\overline{\text{THERM}}$ limits are compared to it. This provides additional immunity to noise and spikes on the $\overline{\text{ALERT}}$ and $\overline{\text{THERM}}$ outputs. The filter responses are shown in 图 7-1. The filter can be enabled or disabled by programming the desired levels in the digital filter register. The digital filter is disabled by default and on POR.

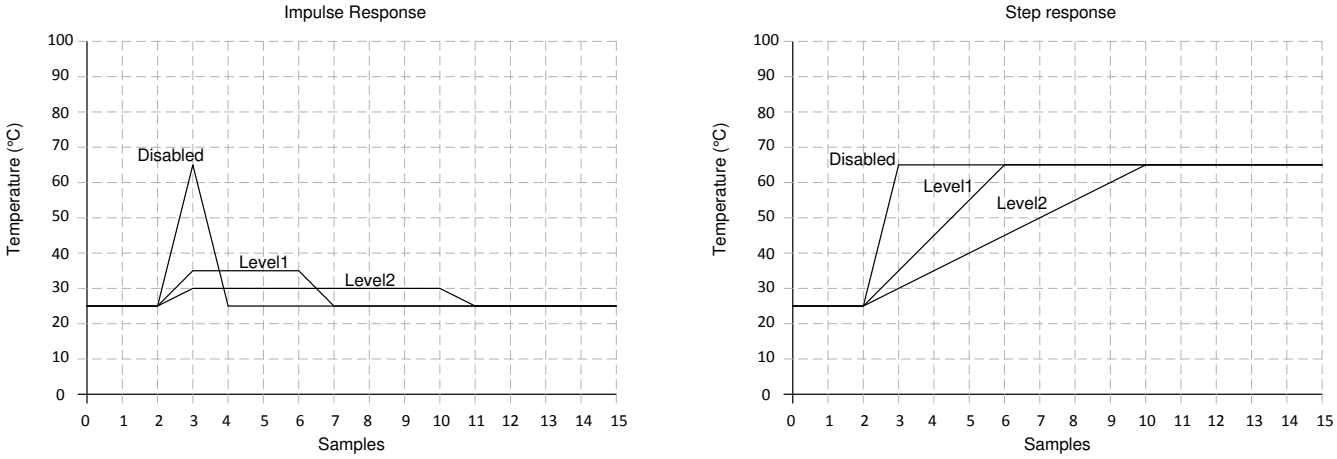

图 7-1. Filter Response to Impulse and Step Inputs

7.3.5 Sensor Fault

The TMP451-Q1 device can sense a fault at the D+ input resulting from incorrect diode connection. The TMP451-Q1 device can also sense an open circuit. Short-circuit conditions return a value of –64°C. The detection circuitry consists of a voltage comparator that trips when the voltage at D+ exceeds (V+) – 0.3 V (typical). The comparator output is continuously checked during a conversion. If a fault is detected, then OPEN (bit 2) in the status register is set to 1.

When not using the remote sensor with the TMP451-Q1 device, the D+ and D– inputs must be connected together to prevent meaningless fault warnings.

Copyright © 2022 Texas Instruments Incorporated

7.3.6 $\overline{\text{ALERT}}$ and $\overline{\text{THERM}}$ Functions

The operation of the $\overline{\text{ALERT}}$ (pin 6) and $\overline{\text{THERM}}$ (pin 4) interrupts is shown in 图 7-2. The operation of the THERM (pin 4) and THERM2 (pin 6) interrupts is shown in 图 7-3.

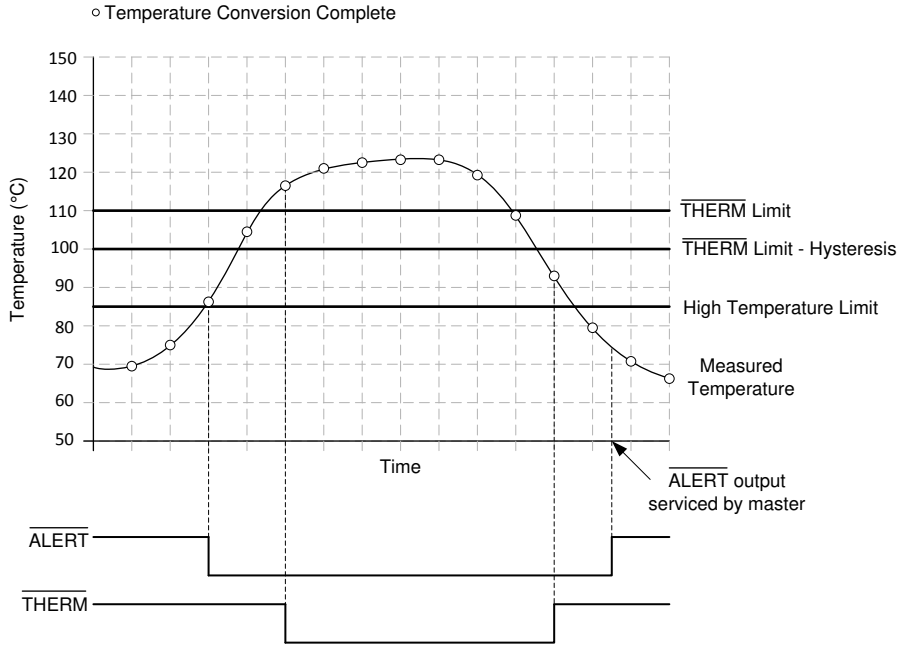

图 7-2. $\overline{\text{ALERT}}$ and $\overline{\text{THERM}}$ Interrupt Operation

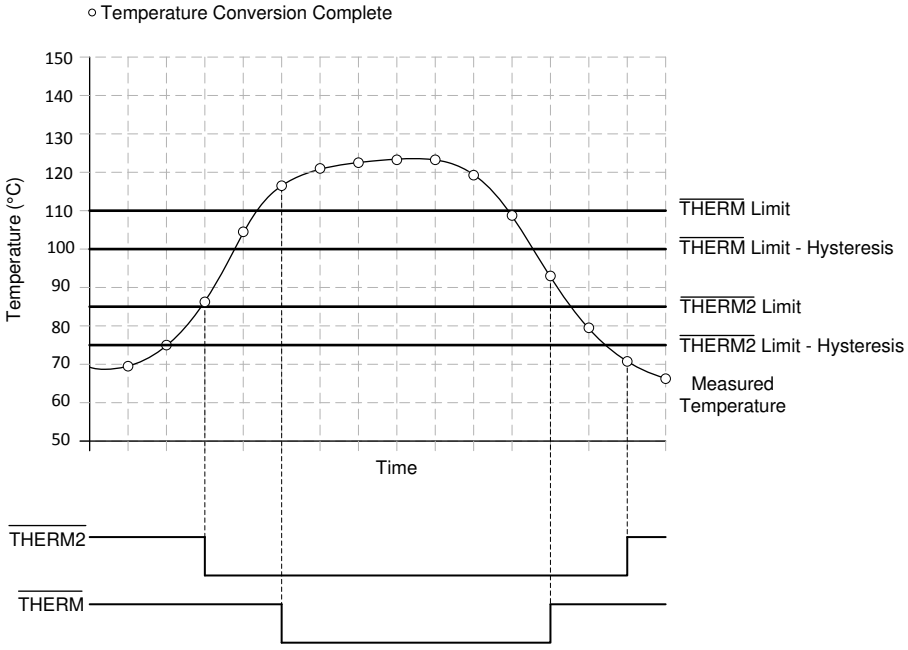

图 7-3. $\overline{\text{THERM}}$ and $\overline{\text{THERM2}}$ Interrupt Operation

The hysteresis value is stored in the $\overline{\text{THERM}}$ hysteresis register. The value of the CONAL[2:0] bits in the consecutive $\overline{\text{ALERT}}$ register determines the number of limit violations before the $\overline{\text{ALERT}}$ pin is tripped. The default value is 000b and corresponds to one violation, 001b programs two consecutive violations, 011b programs three consecutive violations, and 111b programs four consecutive violations. This provides additional filtering for the $\overline{\text{ALERT}}$ pin state.

Copyright © 2022 Texas Instruments Incorporated

7.4 Device Functional Modes

7.4.1 Shutdown Mode (SD)

The TMP451-Q1 shutdown mode enables the user to save maximum power by shutting down all device circuitry other than the serial interface, reducing current consumption to typically less than 3 μA; see 图 6-11, *Shutdown Quiescent Current vs. Supply Voltage*. Shutdown mode is enabled when the SD bit (bit 6) of the configuration register is high; the device shuts down after the current conversion is finished. When the SD bit is low, the device maintains a continuous-conversion state.

7.5 Programming

7.5.1 Serial Interface

The TMP451-Q1 device operates only as a slave device on either the two-wire bus or the SMBus. Connections to either bus are made using the open-drain I/O lines, SDA and SCL. The SDA and SCL pins feature integrated spike suppression filters and Schmitt triggers to minimize the effects of input spikes and bus noise. The TMP451-Q1 device supports the transmission protocol for fast (1 kHz to 400 kHz) and high-speed (1 kHz to 2.5 MHz) modes. All data bytes are transmitted MSB first.

7.5.1.1 Bus Overview

The TMP451-Q1 device is SMBus interface compatible. In SMBus protocol, the device that initiates the transfer is called a *master*, and the devices controlled by the master are *slaves*. The bus must be controlled by a master device that generates the serial clock (SCL), controls the bus access, and generates the start and stop conditions.

To address a specific device, a start condition is initiated. A start condition is indicated by pulling the data line (SDA) from a high-to-low logic level while SCL is high. All slaves on the bus shift in the slave address byte, with the last bit indicating whether a read or write operation is intended. During the ninth clock pulse, the slave being addressed responds to the master by generating an *acknowledge* bit and pulling SDA low.

Data transfer is then initiated and sent over eight clock pulses followed by an acknowledge bit. During data transfer SDA must remain stable while SCL is high, because any change in SDA while SCL is high is interpreted as a control signal.

After all data have been transferred, the master generates a stop condition. A stop condition is indicated by pulling SDA from low to high, while SCL is high.

7.5.1.2 Bus Definitions

The TMP451-Q1 device is two-wire and SMBus-compatible. 图 7-4 and 图 7-5 show the timing for various operations on the TMP451-Q1 device. The bus definitions are as follows:

Bus Idle:	Both SDA and SCL lines remain high.
Start Data Transfer:	A change in the state of the SDA line, from high to low, while the SCL line is high, defines a start condition. Each data transfer initiates with a start condition.
Stop Data Transfer:	A change in the state of the SDA line from low to high while the SCL line is high defines a stop condition. Each data transfer terminates with a repeated start or stop condition.
Data Transfer:	The number of data bytes transferred between a start and a stop condition is not limited and is determined by the master device. The receiver acknowledges data transfer.
Acknowledge:	Each receiving device, when addressed, is obliged to generate an acknowledge bit. A device that acknowledges must pull down the SDA line during the acknowledge clock pulse in such a way that the SDA line is stable low during the high period of the acknowledge clock pulse. Take setup and hold times into account. On a master receive, data transfer termination can be signaled by the master generating a not-acknowledge on the last byte that has been transmitted by the slave.

Copyright © 2022 Texas Instruments Incorporated

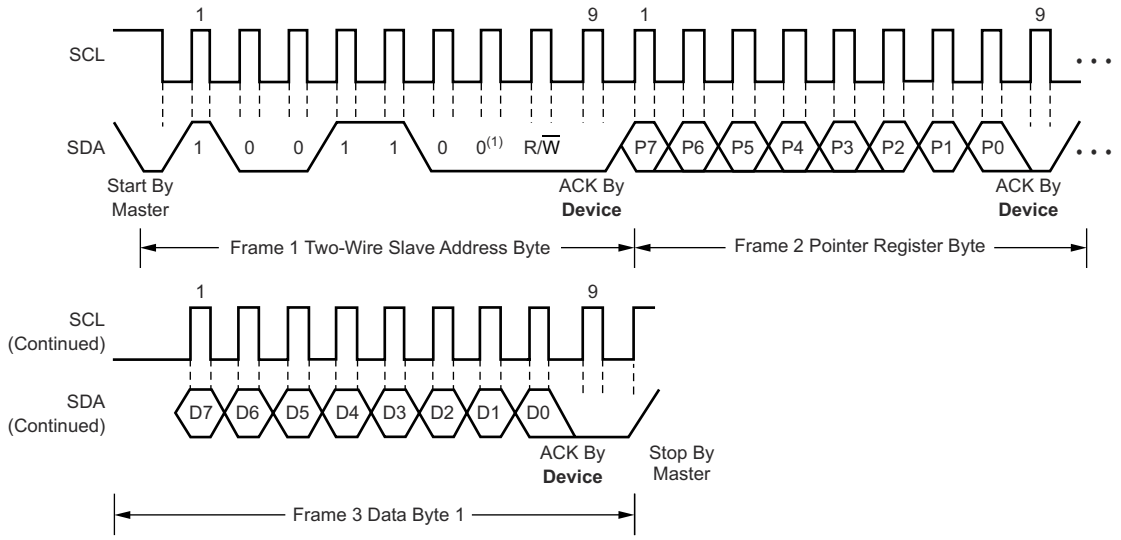

A. Slave address 1001100 shown.

图 7-4. Two-Wire Timing Diagram for Write Word Format

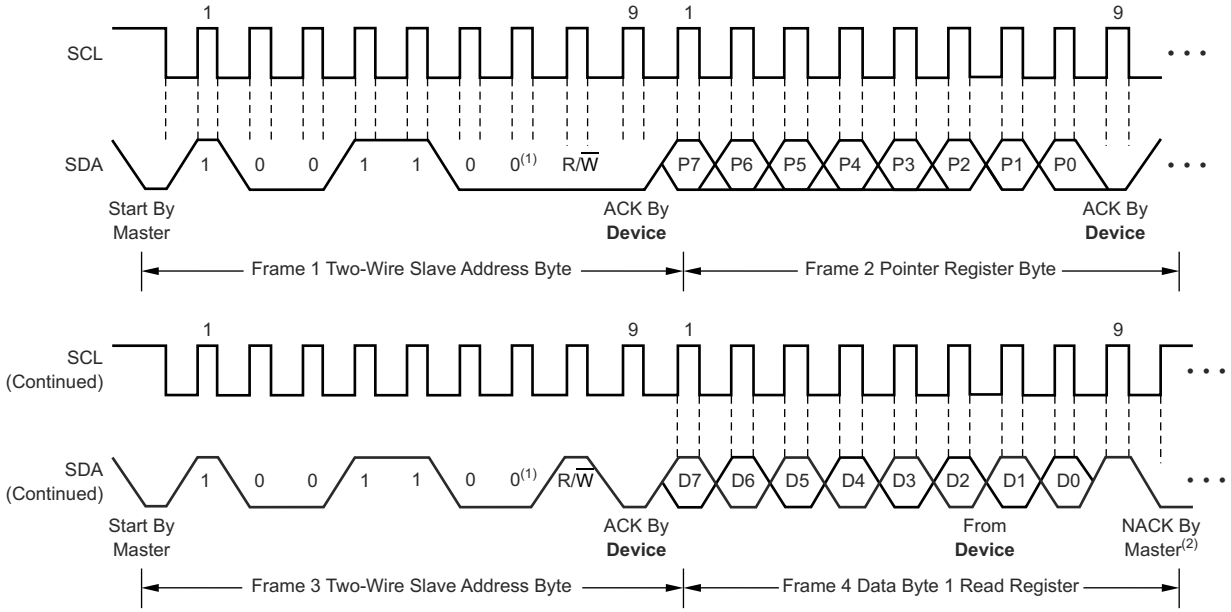

A. Slave address 1001100 shown.

B. Master should leave SDA high to terminate a single-byte read operation.

图 7-5. Two-Wire Timing Diagram for Single-Byte Read Format

7.5.1.3 Serial Bus Address

To communicate with the TMP451-Q1 device, the master must first address slave devices using a slave address byte. The slave address byte consists of seven address bits, and a direction bit indicating the intent of executing a read or write operation. The TMP451-Q1 SMBus addresses are shown in 表 7-3. Additional factory-programmed device addresses are available upon request.

表 7-3. TMP451-Q1 SMBus Addresses

Orderable Part Number (DQF Package)	SMBus Address (7-bit)
TMP451HQDQFRQ1	49
TMP451AQDQFRQ1	4C
TMP451JQDQFRQ1	4E

7.5.1.4 Read and Write Operations

Accessing a particular register on the TMP451-Q1 device is accomplished by writing the appropriate value to the pointer register. The value for the pointer register is the first byte transferred after the slave address byte with the R/ $\overline{W}$ bit low. Every write operation to the TMP451-Q1 device requires a value for the pointer register (see 图 7-4).

When reading from the TMP451-Q1 device the last value stored in the pointer register by a write operation is used to determine which register is read by a read operation. To change which register is read for a read operation, a new value must be written to the pointer register. This transaction is accomplished by issuing a slave address byte with the R/ $\overline{W}$ bit low, followed by the pointer register byte; no additional data are required. The master can then generate a start condition and send the slave address byte with the R/ $\overline{W}$ bit high to initiate the read command; see 图 7-5 for details of this sequence.

If repeated reads from the same register are desired, it is not necessary to continually send the pointer register bytes, because the TMP451-Q1 retains the pointer register value until it is changed by the next write operation. The register bytes are sent MSB first, followed by the LSB.

Read operations should be terminated by issuing a *not-acknowledge* command at the end of the last byte to be read. For single-byte operation, the master must leave the SDA line high during the acknowledge time of the first byte that is read from the slave.

7.5.1.5 Timeout Function

If the SMBus timeout function is enabled, the TMP451-Q1 device resets the serial interface if either SCL or SDA are held low for 25 ms (typical) between a start and stop condition. If the TMP451-Q1 device is holding the bus low, the device releases the bus and waits for a start condition. To avoid activating the timeout function, maintaining a communication speed of at least 1 kHz for the SCL operating frequency is necessary. The SMBTO bit (bit 7) of the consecutive $\overline{ALERT}$ register controls the timeout enable. Setting the SMBTO bit to a value of 0 (default) disables the timeout. Setting the SMBTO bit to a value of 1 enables the function.

7.5.1.6 High-Speed Mode

For the two-wire bus to operate at frequencies above 1 MHz, the master device must issue a high-speed mode (Hs-mode) master code (0000 1xxx) as the first byte after a start condition to switch the bus to high-speed operation. The TMP451-Q1 device does not acknowledge this byte, but switches the input filters on SDA and SCL and the output filter on SDA to operate in Hs-mode, allowing transfers at up to 2.5 MHz. After the Hs-mode master code has been issued, the master transmits a two-wire slave address to initiate a data transfer operation. The bus continues to operate in Hs-mode until a stop condition occurs on the bus. Upon receiving the stop condition, the TMP451-Q1 device switches the input and output filters back to fast mode operation.

Copyright © 2022 Texas Instruments Incorporated

7.6 Register Map

表 7-4. Register Map

POINTER READ (HEX)	POINTER WRITE (HEX)	POR (HEX)	BIT DESCRIPTION								REGISTER DESCRIPTION
			7	6	5	4	3	2	1	0	
00	N/A	00	LT11	LT10	LT9	LT8	LT7	LT6	LT5	LT4	Local temperature (high byte)
01	N/A	00	RT11	RT10	RT9	RT8	RT7	RT6	RT5	RT4	Remote temperature (high byte)
02	N/A	N/A	BUSY	LHIGH	LLOW	RHIGH	RLOW	OPEN	RTHRM	LTHRM	Status register
03	09	00	MASK1	SD	$\overline{\text{ALERT}}$/ $\overline{\text{THERM2}}$	0	0	RANGE	0	0	Configuration register
04	0A	08	0	0	0	0	CR3	CR2	CR1	CR0	Conversion rate register
05	0B	55	LTHL11	LTHL10	LTHL9	LTHL8	LTHL7	LTHL6	LTHL5	LTHL4	Local temperature high limit
06	0C	00	LTLL11	LTLL10	LTLL9	LTLL8	LTLL7	LTLL6	LTLL5	LTLL4	Local temperature low limit
07	0D	55	RTHL11	RTHL10	RTHL9	RTHL8	RTHL7	RTHL6	RTHL5	RTHL4	Remote temperature high limit (high byte)
08	0E	00	RTLL11	RTLL10	RTLL9	RTLL8	RTLL7	RTLL6	RTLL5	RTLL4	Remote temperature low limit (high byte)
N/A	0F	N/A	X	X	X	X	X	X	X	X	One-shot start(1)
10	N/A	00	RT3	RT2	RT1	RT0	0	0	0	0	Remote temperature (low byte)
11	11	00	RTOS11	RTOS10	RTOS9	RTOS8	RTOS7	RTOS6	RTOS5	RTOS4	Remote temperature offset (high byte)
12	12	00	RTOS3	RTOS2	RTOS1	RTOS0	0	0	0	0	Remote temperature offset (low byte)
13	13	00	RTHL3	RTHL2	RTHL1	RTHL0	0	0	0	0	Remote temperature high limit (low byte)
14	14	00	RTLL3	RTLL2	RTLL1	RTLL0	0	0	0	0	Remote temperature low limit (low byte)
15	N/A	00	LT3	LT2	LT1	LT0	0	0	0	0	Local temperature (low byte)
19	19	6E	RTH11	RTH10	RTH9	RTH8	RTH7	RTH6	RTH5	RTH4	Remote temperature $\overline{\text{THERM}}$ limit
20	20	6E	LTH11	LTH10	LTH9	LTH8	LTH7	LTH6	LTH5	LTH4	Local temperature $\overline{\text{THERM}}$ limit
21	21	0A	HYS11	HYS10	HYS9	HYS8	HYS7	HYS6	HYS5	HYS4	$\overline{\text{THERM}}$ hysteresis
22	22	01	SMBTO	0	0	0	CONAL2	CONAL1	CONAL0	1	Consecutive $\overline{\text{ALERT}}$
23	23	00	NC7	NC6	NC5	NC4	NC3	NC2	NC1	NC0	η -factor correction
24	24	00	0	0	0	0	0	0	DF1	DF0	Digital filter control
FE	N/A	55	0	1	0	1	0	1	0	1	Manufacturer ID

(1) X = undefined. Writing any value to this register initiates a one-shot start; see the *One-Shot Conversion* section.

Copyright © 2022 Texas Instruments Incorporated

7.6.1 Register Information

The TMP451-Q1 device contains multiple registers for holding configuration information, temperature measurement results, and status information. These registers are described in 图 7-6 and 表 7-4.

7.6.1.1 Pointer Register

图 7-6 shows the internal register structure of the TMP451-Q1 device. The 8-bit pointer register is used to address a given data register. The pointer register identifies which of the data registers should respond to a read or write command on the two-wire bus. This register is set with every write command. A write command must be issued to set the proper value in the pointer register before executing a read command. 表 7-4 describes the pointer register and the internal structure of the TMP451-Q1 registers. The power-on reset (POR) value of the pointer register is 00h (0000 0000b).

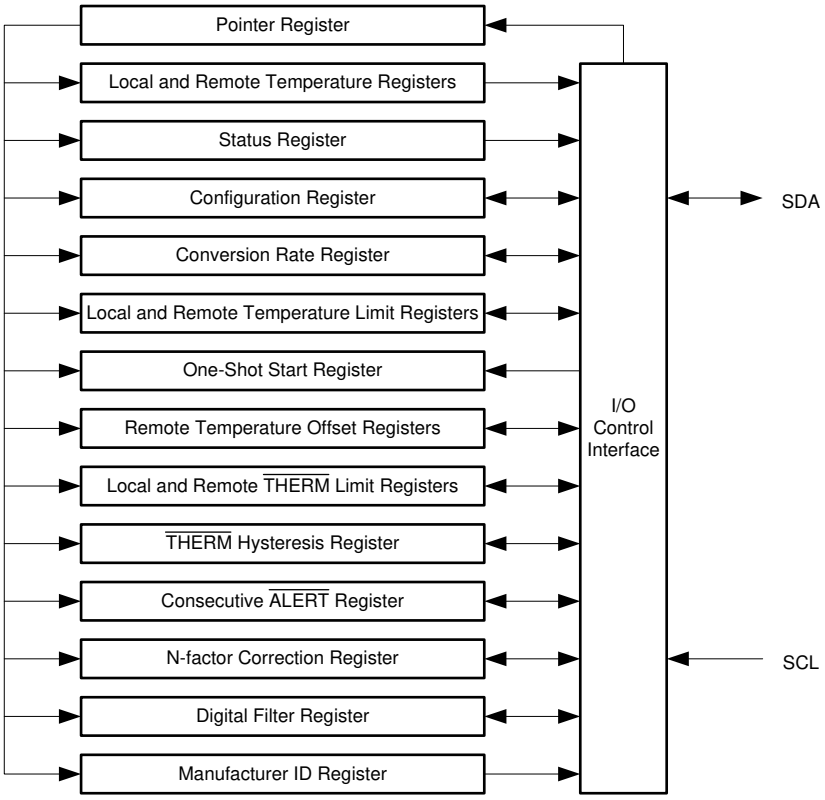

图 7-6. Internal Register Structure

7.6.1.2 Temperature Registers

The TMP451-Q1 device has multiple 8-bit registers that hold temperature measurement results. The eight most significant bits (MSBs) of the local temperature sensor result are stored in register 00h, while the four least significant bits (LSBs) are stored in register 15h (the four MSBs of register 15h). The eight MSBs of the remote temperature sensor result are stored in register 01h, and the four LSBs are stored in register 10h (the four MSBs of register 10h). The four LSBs of both the local sensor and the remote sensor indicate the temperature value after the decimal point (for example, if the temperature result is 10.0625°C, the high byte is 0000 1010 and the low byte is 0001 0000). These registers are read-only and are updated by the ADC each time a temperature measurement is completed.

When the full temperature value is needed, reading the MSB value first causes the LSB value to be locked (the ADC does not write to it) until it is read. The same thing happens upon reading the LSB value first (the MSB value is locked until it is read). This mechanism assures that both bytes of the read operation are from the same ADC conversion. This assurance remains valid only until another register is read. For proper operation, read the

Copyright © 2022 Texas Instruments Incorporated

high byte of the temperature result first. Read the low byte register in the next read command; if the LSBs are not needed, the register may be left unread. The power-on reset value of all temperature registers is 00h.

7.6.1.3 Status Register

The status register reports the state of the temperature ADC, the temperature limit comparators, and the connection to the remote sensor. 表 7-5 lists the status register bits. The status register is read-only, and is read by accessing pointer address 02h.

表 7-5. Status Register Format

STATUS REGISTER (READ = 02h, WRITE = N/A)		
BIT NUMBER	**BIT NAME**	**FUNCTION**
7	BUSY	= 1 when the ADC is converting
6	LHIGH(1)	= 1 when the local high temperature limit is tripped
5	LLOW(1)	= 1 when the local low temperature limit is tripped
4	RHIGH(1)	= 1 when the remote high temperature limit is tripped
3	RLOW(1)	= 1 when the remote low temperature limit is tripped
2	OPEN(1)	= 1 when the remote sensor is an open circuit
1	RTHRM	= 1 when the remote $\overline{\text{THERM}}$ limit is tripped
0	LTHRM	= 1 when the local $\overline{\text{THERM}}$ limit is tripped

(1) These flags stay high until the status register is read or they are reset by a POR when pin 6 is configured as $\overline{\text{ALERT}}$. Only bit 2 (OPEN) stays high until the status register is read or it is reset by a POR when pin 6 is configured as $\overline{\text{THERM2}}$.

The BUSY bit = 1 if the ADC is making a conversion. This bit is set to 0 if the ADC is not converting.

The LHIGH and LLOW bits indicate a local sensor overtemperature or undertemperature event, respectively. The RHIGH and RLOW bits indicate a remote sensor overtemperature or undertemperature event, respectively. The OPEN bit indicates an open circuit condition on the remote sensor. When pin 6 is configured as the $\overline{\text{ALERT}}$ output, the five flags are NORed together. If any of the five flags are high, the $\overline{\text{ALERT}}$ interrupt latch is set and the $\overline{\text{ALERT}}$ output goes low. Reading the status register clears the five flags, provided that the condition that caused the setting of the flags is not present anymore (that is, the value of the corresponding result register is within the limits, or the remote sensor is connected properly and functional). The $\overline{\text{ALERT}}$ interrupt latch (and the $\overline{\text{ALERT}}$ pin correspondingly) is not reset by reading the status register. The reset is done by the master reading the temperature sensor device address to service the interrupt, and only if the flags have been reset and the condition that caused them to be set is not present.

The RTHRM and LTHRM flags are set when the corresponding temperature exceeds the programmed $\overline{\text{THERM}}$ limit. They are reset automatically when the temperature returns to within the limits. The $\overline{\text{THERM}}$ output goes low in the case of overtemperature on either the local or the remote channel, and goes high as soon as the measurements are within the limits again. The $\overline{\text{THERM}}$ hysteresis register (21h) allows hysteresis to be added so that the flag resets and the output goes high when the temperature returns to or goes below the limit value minus the hysteresis value.

When pin 6 is configured as $\overline{\text{THERM2}}$, only the high limits matter. The LHIGH and RHIGH flags are set if the respective temperatures exceed the limit values, and the pin goes low to indicate the event. The LLOW and RLOW flags have no effect on $\overline{\text{THERM2}}$, and the output behaves the same way when configured as $\overline{\text{THERM}}$.

Copyright © 2022 Texas Instruments Incorporated

7.6.1.4 Configuration Register

The configuration register sets the temperature range, the $\overline{\text{ALERT}}$/ $\overline{\text{THERM}}$ modes, and controls the shutdown mode. The configuration register is set by writing to pointer address 09h, and read by reading from pointer address 03h. 表 7-6 summarizes the bits of configuration register.

表 7-6. Configuration Register Bit Descriptions

CONFIGURATION REGISTER (READ = 03h, WRITE = 09h, POR = 00h)			
BIT NUMBER	**NAME**	**FUNCTION**	**POWER-ON RESET VALUE**
7	MASK1	0 = $\overline{\text{ALERT}}$ Enabled 1 = $\overline{\text{ALERT}}$ Masked	0
6	SD	0 = Run 1 = Shut down	0
5	$\overline{\text{ALERT}}$/ $\overline{\text{THERM2}}$	0 = $\overline{\text{ALERT}}$ 1 = $\overline{\text{THERM2}}$	0
4:3	Reserved	—	0
2	RANGE	0 = 0°C to +127°C 1 = –64°C to +191°C	0
1:0	Reserved	—	0

MASK1 (bit 7) of the configuration register masks the $\overline{\text{ALERT}}$ output. If MASK1 is 0 (default), the $\overline{\text{ALERT}}$ output is enabled. If MASK1 is set to 1, the $\overline{\text{ALERT}}$ output is disabled. This configuration applies only if the value of $\overline{\text{ALERT}}$/ $\overline{\text{THERM2}}$ (bit 5) is 0 (that is, pin 6 is configured as the $\overline{\text{ALERT}}$ output). If pin 6 is configured as the $\overline{\text{THERM2}}$ output, the value of the MASK1 bit has no effect.

The shutdown bit (SD, bit 6) enables or disables the temperature-measurement circuitry. If SD = 0 (default), the TMP451-Q1 device converts continuously at the rate set in the conversion rate register. When SD is set to 1, the TMP451-Q1 device stops converting when the current conversion sequence is complete and enters a shutdown mode. When SD is set to 0 again, the TMP451-Q1 resumes continuous conversions. When SD = 1, a single conversion can be started by writing to the one-shot start register. See the *One-Shot Start Register* section for more information.

$\overline{\text{ALERT}}$/ $\overline{\text{THERM2}}$ (bit 5) sets the configuration of pin 6. If the $\overline{\text{ALERT}}$/ $\overline{\text{THERM2}}$ bit is 0 (default), then pin 6 is configured as the $\overline{\text{ALERT}}$ output; if it is set to 1, then pin 6 is configured as the $\overline{\text{THERM2}}$ output.

The temperature range is set by configuring RANGE (bit 2) of the configuration register. Setting this bit low (default) configures the TMP451-Q1 device for the standard measurement range (0°C to 127°C); temperature conversions are stored in the standard binary format. Setting bit 2 high configures the TMP451-Q1 device for the extended measurement range (– 64°C to 191°C); temperature conversions are stored in the extended binary format (see 表 7-1).

The remaining bits of the configuration register are reserved and must always be set to 0. The power-on reset value for this register is 00h.

Copyright © 2022 Texas Instruments Incorporated

7.6.1.5 Conversion Rate Register

The conversion rate register (read address 04h, write address 0Ah) controls the rate at which temperature conversions are performed. This register adjusts the idle time between conversions but not the conversion time itself, thereby allowing the TMP451-Q1 power dissipation to be balanced with the temperature register update rate. 表 7-7 lists the conversion rate options and corresponding time between conversions. The default value of the register is 08h, which gives a default rate of 16 conversions per second.

表 7-7. Conversion Rate

VALUE	CONVERSIONS PER SECOND	TIME (SECONDS)
00h	0.0625	16
01h	0.125	8
02h	0.25	4
03h	0.5	2
04h	1	1
05h	2	0.5
06h	4	0.25
07h	8	0.125
08h	16 (default)	0.0625 (default)
09h	32	0.03125

7.6.1.6 One-Shot Start Register

When the TMP451-Q1 device is in shutdown mode (SD = 1 in the configuration register), a single conversion is started by writing any value to the one-shot start register, pointer address 0Fh. This write operation starts one conversion and comparison cycle on both the local and the remote sensors. The TMP451-Q1 device returns to shutdown mode when the cycle completes. The value of the data sent in the write command is irrelevant and is not stored by the TMP451-Q1 device.

7.6.1.7 η-Factor Correction Register

The TMP451-Q1 device allows for a different η-factor value to be used for converting remote channel measurements to temperature. The remote channel uses sequential current excitation to extract a differential V_{BE} voltage measurement to determine the temperature of the remote transistor. 方程式 1 shows this voltage and temperature.

$$V_{BE2} - V_{BE1} = \frac{\eta k T}{q} \ln\left(\frac{I_2}{I_1}\right) \tag{1}$$

The value η in 方程式 1 is a characteristic of the particular transistor used for the remote channel. The power-on reset value for the TMP451-Q1 device is η = 1.008. The value in the η-factor correction register may be used to adjust the effective η-factor according to 方程式 2 and 方程式 3.

$$\eta_{eff} = \left(\frac{1.008 \times 2088}{2088 + N_{ADJUST}}\right) \tag{2}$$

$$N_{ADJUST} = \left(\frac{1.008 \times 2088}{\eta_{eff}}\right) - 2088 \tag{3}$$

The η-factor correction value must be stored in twos complement format, yielding an effective data range from –128 to 127. The η-factor correction value is written to and read from pointer address 23h. The register power-on reset value is 00h, thus having no effect unless a different value is written to it.

Copyright © 2022 Texas Instruments Incorporated

表 7-8. η -Factor Range

N_{ADJUST}			η
BINARY	HEX	DECIMAL	
0111 1111	7F	127	0.950198
0000 1010	0A	10	1.003195
0000 1000	08	8	1.004152
0000 0110	06	6	1.005111
0000 0100	04	4	1.006072
0000 0010	02	2	1.007035
0000 0001	01	1	1.007517
0000 0000	00	0	1.008
1111 1111	FF	–1	1.008483
1111 1110	FE	–2	1.008967
1111 1100	FC	–4	1.009935
1111 1010	FA	–6	1.010905
1111 1000	F8	–8	1.011877
1111 0110	F6	–10	1.012851
1000 0000	80	–128	1.073837

7.6.1.8 Offset Register

The offset register allows the TMP451-Q1 device to store any system offset compensation value that might be observed from precision calibration. The value in the register is stored in the same format as the temperature result, and is added to the remote temperature result upon every conversion. Combined with the η-factor correction, this function allows for very accurate system calibration over the entire temperature range.

7.6.1.9 General Call Reset

The TMP451-Q1 device supports reset using the two-wire general call address 00h (0000 0000b). The TMP451-Q1 device acknowledges the general call address and responds to the second byte. If the second byte is 06h (0000 0110b), the TMP451-Q1 device executes a software reset. This software reset restores the power-on reset state to all TMP451-Q1 registers, and it aborts any conversion in progress. The TMP451-Q1 device takes no action in response to other values in the second byte.

7.6.1.10 Identification Register

The TMP451-Q1 device allows for the two-wire bus controller to query the device for manufacturer and device IDs to enable software identification of the device at the particular two-wire bus address. The manufacturer ID is obtained by reading from pointer address FEh. The TMP451-Q1 device reads 55h for the manufacturer code.

Copyright © 2022 Texas Instruments Incorporated

8 Application and Implementation

备注

以下应用部分中的信息不属于 TI 器件规格的范围，TI 不担保其准确性和完整性。TI 的客 户应负责确定器件是否适用于其应用。客户应验证并测试其设计，以确保系统功能。

8.1 Application Information

The TMP451-Q1 device requires only a transistor connected between the D+ and D – pins for remote temperature measurement. Tie the D+ pin to GND if the remote channel is not used and only the local temperature is measured. The SDA, ALERT, and THERM pins (and SCL, if driven by an open-drain output) require pullup resistors as part of the communication bus. A 0.1-µF power-supply decoupling capacitor is recommended for local bypassing. 图 8-1 shows the typical configuration for the TMP451-Q1 device.

8.2 Typical Application

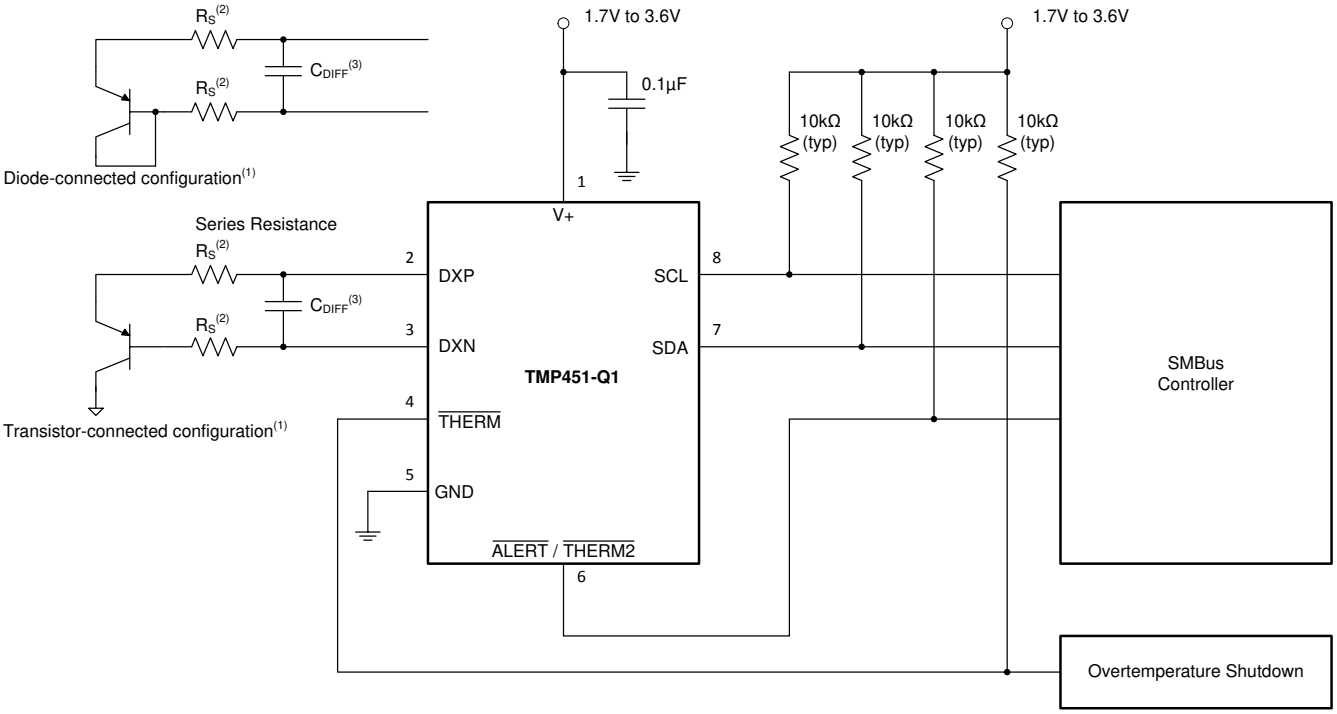

A. Diode-connected configuration provides better settling time. Transistor-connected configuration provides better series resistance cancellation.

B. R_S (optional) should be < 1 kΩ in most applications. Selection of R_S depends on application; see the *Filtering* section.

C. C_{DIFF} (optional) should be < 1000 pF in most applications. Selection of C_{DIFF} depends on application; see the *Filtering* section and 图 6-6, *Remote Temperature Error vs. Differential Capacitance*.

图 8-1. TMP451-Q1 Basic Connections Using a Discrete Remote Transistor

Copyright © 2022 Texas Instruments Incorporated

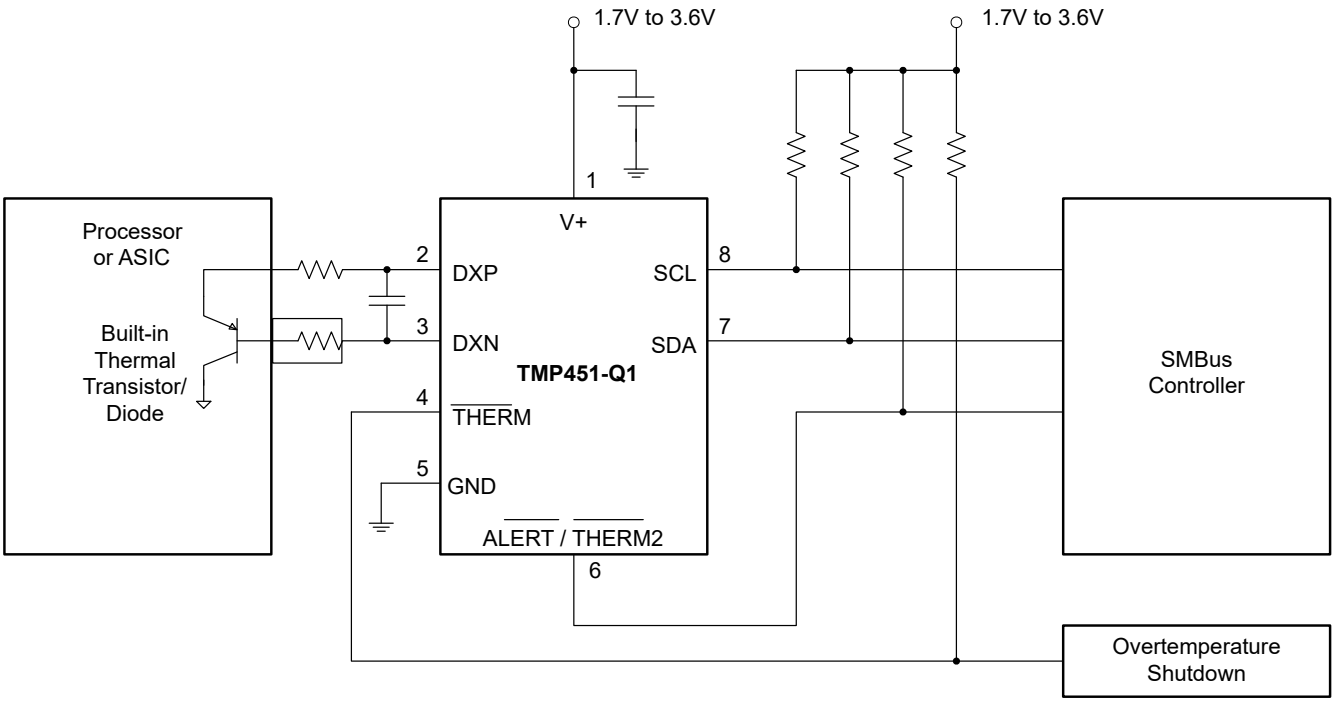

图 8-2. TMP451-Q1 Basic Connections Using a Processor Built-In Remote Transistor

8.2.1 Design Requirements

The TMP451-Q1 device is designed to be used with either discrete transistors or substrate transistors built into processor chips and ASICs. Either NPN or PNP transistors can be used, as long as the base-emitter junction is used as the remote temperature sense. NPN transistors must be diode-connected. PNP transistors can either be transistor- or diode-connected (see 图 8-1).

Errors in remote temperature sensor readings are typically the consequence of the ideality factor and current excitation used by the TMP451-Q1 device versus the manufacturer-specified operating current for a given transistor. Some manufacturers specify a high-level and low-level current for the temperature-sensing substrate transistors. The TMP451-Q1 device uses 7.5 μA for I_{LOW} and 120 μA for I_{HIGH}.

The ideality factor (η) is a measured characteristic of a remote temperature sensor diode as compared to an ideal diode. The TMP451-Q1 allows for different η-factor values; see the *η-Factor Correction Register* section.

The ideality factor for the TMP451-Q1 device is trimmed to be 1.008. For transistors that have an ideality factor that does not match the TMP451-Q1, 方程式 4 can be used to calculate the temperature error.

备注

For the equation to be used correctly, actual temperature (°C) must be converted to Kelvin (K).

$$T_{ERR} = \left(\frac{\eta - 1.008}{1.008}\right) \times (273.15 + T(°C)) \quad (4)$$

where

- T_{ERR} = error in the TMP451-Q1 device because $\eta \neq 1.008$
- η = ideality factor of remote temperature sensor
- T(°C) = actual temperature
- Degree delta is the same for °C and K.

Copyright © 2022 Texas Instruments Incorporated

For η = 1.004 and T(°C) = 100°C:

$$T_{ERR} = \left(\frac{1.004 - 1.008}{1.008}\right) \times 273.15 + 100°C$$
$$T_{ERR} = 1.48°C \quad (5)$$

If a discrete transistor is used as the remote temperature sensor with the TMP451-Q1, the best accuracy can be achieved by selecting the transistor according to the following criteria:

1. Base-emitter voltage > 0.25 V at 7.5 μA, at the highest sensed temperature.
2. Base-emitter voltage < 0.95 V at 120 μA, at the lowest sensed temperature.
3. Base resistance < 100 Ω.
4. Tight control of V_{BE} characteristics indicated by small variations in h_{FE} (that is, 50 to 150).

Based on this criteria, two recommended small-signal transistors are the 2N3904 (NPN) or 2N3906 (PNP).

8.2.2 Detailed Design Procedure

The local temperature sensor inside the TMP451-Q1 device monitors the ambient air around the device. The thermal time constant for the TMP451-Q1 device is approximately two seconds. This constant implies that if the ambient air changes quickly by 100°C, it would take the TMP451-Q1 device about 10 seconds (that is, five thermal time constants) to settle to within 1°C of the final value. In most applications, the TMP451-Q1 package is in electrical, and therefore thermal, contact with the printed circuit board (PCB), as well as subjected to forced airflow. The accuracy of the measured temperature directly depends on how accurately the PCB and forced airflow temperatures represent the temperature that the TMP451-Q1 is measuring. Additionally, the internal power dissipation of the TMP451-Q1 can cause the temperature to rise above the ambient or PCB temperature. The internal power dissipated as a result of exciting the remote temperature sensor is negligible because of the small currents used. For a 3.3-V supply and maximum conversion rate of 16 conversions per second, the TMP451-Q1 device dissipates 0.54 mW (PD_{IQ} = 3.3 V × 165 μA). A θ_{JA} of 171.3°C/W causes the junction temperature to rise approximately 0.09°C above the ambient.

The temperature measurement accuracy of the TMP451-Q1 device depends on the remote and/or local temperature sensor being at the same temperature as the system point being monitored. Clearly, if the temperature sensor is not in good thermal contact with the part of the system being monitored, then there will be a delay in the response of the sensor to a temperature change in the system. For remote temperature-sensing applications using a substrate transistor (or a small, SOT23 transistor) placed close to the device being monitored, this delay is usually not a concern.

8.2.3 Application Curves

The following curves show the performance capabilities of the TMP451-Q1 device. 图 8-3 shows the accuracy performance in an oil-bath temperature drift of a population of 16 standard 2N3906 transistors measured in a diode-connected configuration. 图 8-4 shows the typical step response to a submerging of a sensor in an oil bath with temperature of 100°C.

Copyright © 2022 Texas Instruments Incorporated

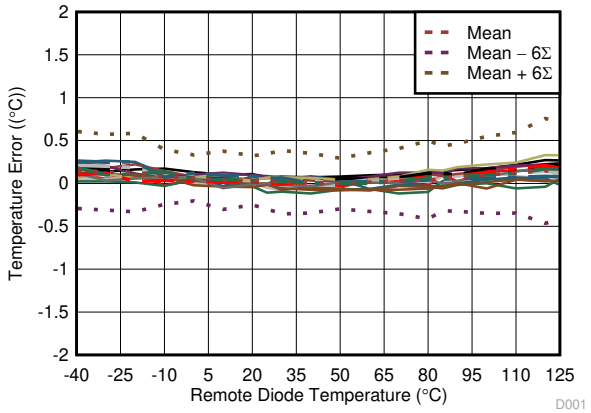

图 8-3. TMP451-Q1 Remote Diode Temperature Drift (Diode-Connected 2N3906)

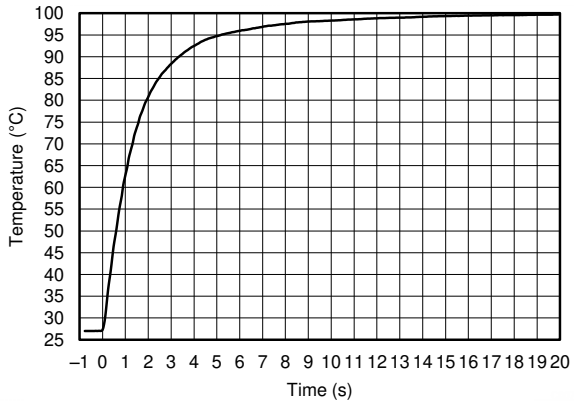

图 8-4. Temperature Step Response

9 Power Supply Recommendations

The TMP451-Q1 device operates with a power supply range of 1.7 V to 3.6 V. The device is optimized for operation at 3.3-V supply but can measure temperature accurately in the full supply range.

A power-supply bypass capacitor is recommended. Place this capacitor as close as possible to the supply and ground pins of the device. A typical value for this supply bypass capacitor is 0.1 μF. Applications with noisy or high-impedance power supplies may require additional decoupling capacitors to reject power-supply noise.

Copyright © 2022 Texas Instruments Incorporated

10 Layout

10.1 Layout Guidelines

Remote temperature sensing on the TMP451-Q1 device measures very small voltages using very low currents; therefore, noise at the device inputs must be minimized. Most applications using the TMP451-Q1 have high digital content, with several clocks and logic level transitions creating a noisy environment. Layout should adhere to the following guidelines:

1. Place the TMP451-Q1 device as close to the remote junction sensor as possible.
2. Route the D+ and D – traces next to each other and shield them from adjacent signals through the use of ground guard traces; see 图 10-1. If a multilayer PCB is used, bury these traces between ground or V+ planes to shield them from extrinsic noise sources. 5 mil (0.127 mm) PCB traces are recommended.
3. Minimize additional thermocouple junctions caused by copper-to-solder connections. If these junctions are used, make the same number and approximate locations of copper-to-solder connections in both the D+ and D – connections to cancel any thermocouple effects.
4. Use a 0.1 µF local bypass capacitor directly between the V+ and GND of the TMP451-Q1 device. For optimum measurement performance, minimize filter capacitance between D+ and D – to 1000 pF or less . This capacitance includes any cable capacitance between the remote temperature sensor and the TMP451-Q1 device.
5. If the connection between the remote temperature sensor and the TMP451-Q1 device is less than 8-in (20,32 cm) long, use a twisted-wire pair connection. For lengths greater than 8 in, use a twisted, shielded pair with the shield grounded as close to the TMP451-Q1 device as possible. Leave the remote sensor connection end of the shield wire open to avoid ground loops and 60-Hz pickup.
6. Thoroughly clean and remove all flux residue in and around the pins of the TMP451-Q1 device to avoid temperature offset readings as a result of leakage paths between D+ and GND, or between D+ and V+.

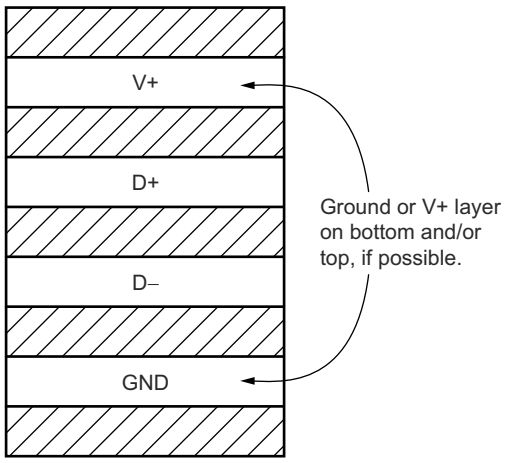

Use minimum 5-mil (0.127 mm) traces with 5-mil spacing.

图 10-1. Suggested PCB Layer Cross-Section

Copyright © 2022 Texas Instruments Incorporated

10.2 Layout Example

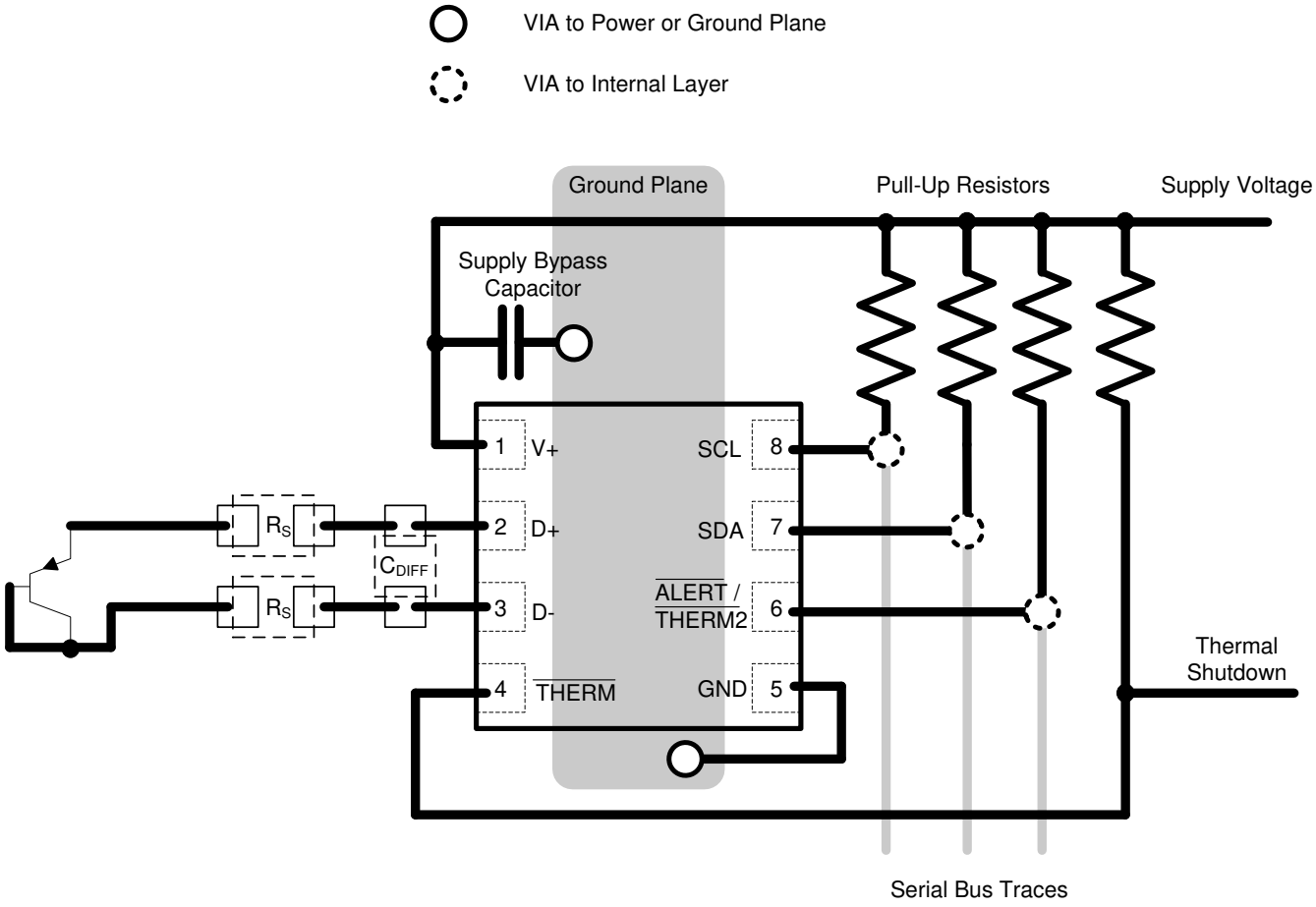

图 10-2. TMP451-Q1 Layout Example

Copyright © 2022 Texas Instruments Incorporated

11 Device and Documentation Support

11.1 接收文档更新通知

要接收文档更新通知，请导航至 ti.com 上的器件产品文件夹。点击 *订阅更新* 进行注册，即可每周接收产品信息更改摘要。有关更改的详细信息，请查看任何已修订文档中包含的修订历史记录。

11.2 支持资源

TI E2E™ 支持论坛是工程师的重要参考资料，可直接从专家获得快速、经过验证的解答和设计帮助。搜索现有解答或提出自己的问题可获得所需的快速设计帮助。

链接的内容由各个贡献者“按原样”提供。这些内容并不构成 TI 技术规范，并且不一定反映 TI 的观点；请参阅 TI 的《使用条款》。

11.3 Trademarks

SMBus™ is a trademark of Intel Corporation.
TI E2E™ is a trademark of Texas Instruments.
所有商标均为其各自所有者的财产。

11.4 静电放电警告



静电放电 (ESD) 会损坏这个集成电路。德州仪器 (TI) 建议通过适当的预防措施处理所有集成电路。如果不遵守正确的处理和安装程序，可能会损坏集成电路。

ESD 的损坏小至导致微小的性能降级，大至整个器件故障。精密的集成电路可能更容易受到损坏，这是因为非常细微的参数更改都可能会导致器件与其发布的规格不相符。

11.5 术语表

TI 术语表　　本术语表列出并解释了术语、首字母缩略词和定义。

12 Mechanical, Packaging, and Orderable Information

The following pages include mechanical, packaging, and orderable information. This information is the most current data available for the designated devices. This data is subject to change without notice and revision of this document. For browser-based versions of this data sheet, refer to the left-hand navigation.

Copyright © 2022 Texas Instruments Incorporated

PACKAGING INFORMATION

Orderable part number	Status (1)	Material type (2)	Package | Pins	Package qty | Carrier	RoHS (3)	Lead finish/ Ball material (4)	MSL rating/ Peak reflow (5)	Op temp (°C)	Part marking (6)
TMP451AQDQFRQ1	Active	Production	WSON (DQF) | 8	3000 | LARGE T&R	Yes	NIPDAU | NIPDAUAG	Level-1-260C-UNLIM	-40 to 125	DAIQ
TMP451AQDQFRQ1.A	Active	Production	WSON (DQF) | 8	3000 | LARGE T&R	Yes	NIPDAU	Level-1-260C-UNLIM	-40 to 125	DAIQ
TMP451AQDQWRQ1	Active	Production	WSON (DQW) | 8	3000 | LARGE T&R	Yes	SN	Level-1-260C-UNLIM	-40 to 125	1A
TMP451AQDQWRQ1.A	Active	Production	WSON (DQW) | 8	3000 | LARGE T&R	Yes	SN	Level-1-260C-UNLIM	-40 to 125	1A
TMP451HQDQFRQ1	Active	Production	WSON (DQF) | 8	3000 | LARGE T&R	Yes	NIPDAU | NIPDAUAG	Level-1-260C-UNLIM	-40 to 125	1RUG
TMP451HQDQFRQ1.A	Active	Production	WSON (DQF) | 8	3000 | LARGE T&R	Yes	NIPDAU	Level-1-260C-UNLIM	-40 to 125	1RUG
TMP451HQDQWRQ1	Active	Production	WSON (DQW) | 8	3000 | LARGE T&R	Yes	SN	Level-1-260C-UNLIM	-40 to 125	1H
TMP451HQDQWRQ1.A	Active	Production	WSON (DQW) | 8	3000 | LARGE T&R	Yes	SN	Level-1-260C-UNLIM	-40 to 125	1H
TMP451HQDQWTQ1	Obsolete	Production	WSON (DQW) | 8	-	-	Call TI	Call TI	-40 to 125	1H
TMP451JQDQFRQ1	Active	Production	WSON (DQF) | 8	3000 | LARGE T&R	Yes	NIPDAU | NIPDAUAG	Level-1-260C-UNLIM	-40 to 125	1RVG
TMP451JQDQFRQ1.A	Active	Production	WSON (DQF) | 8	3000 | LARGE T&R	Yes	NIPDAU	Level-1-260C-UNLIM	-40 to 125	1RVG
TMP451JQDQFTQ1	Obsolete	Production	WSON (DQF) | 8	-	-	Call TI	Call TI	-40 to 125	1RVG
TMP451JQDQWRQ1	Active	Production	WSON (DQW) | 8	3000 | LARGE T&R	Yes	SN	Level-1-260C-UNLIM	-40 to 125	1J
TMP451JQDQWRQ1.A	Active	Production	WSON (DQW) | 8	3000 | LARGE T&R	Yes	SN	Level-1-260C-UNLIM	-40 to 125	1J
TMP451JQDQWTQ1	Obsolete	Production	WSON (DQW) | 8	-	-	Call TI	Call TI	-40 to 125	1J

(1) **Status:** For more details on status, see our product life cycle.

(2) **Material type:** When designated, preproduction parts are prototypes/experimental devices, and are not yet approved or released for full production. Testing and final process, including without limitation quality assurance, reliability performance testing, and/or process qualification, may not yet be complete, and this item is subject to further changes or possible discontinuation. If available for ordering, purchases will be subject to an additional waiver at checkout, and are intended for early internal evaluation purposes only. These items are sold without warranties of any kind.

(3) **RoHS values:** Yes, No, RoHS Exempt. See the TI RoHS Statement for additional information and value definition.

(4) **Lead finish/Ball material:** Parts may have multiple material finish options. Finish options are separated by a vertical ruled line. Lead finish/Ball material values may wrap to two lines if the finish value exceeds the maximum column width.

(5) **MSL rating/Peak reflow:** The moisture sensitivity level ratings and peak solder (reflow) temperatures. In the event that a part has multiple moisture sensitivity ratings, only the lowest level per JEDEC standards is shown. Refer to the shipping label for the actual reflow temperature that will be used to mount the part to the printed circuit board.

(6) **Part marking:** There may be an additional marking, which relates to the logo, the lot trace code information, or the environmental category of the part.

Multiple part markings will be inside parentheses. Only one part marking contained in parentheses and separated by a "~" will appear on a part. If a line is indented then it is a continuation of the previous line and the two combined represent the entire part marking for that device.

Important Information and Disclaimer: The information provided on this page represents TI's knowledge and belief as of the date that it is provided. TI bases its knowledge and belief on information provided by third parties, and makes no representation or warranty as to the accuracy of such information. Efforts are underway to better integrate information from third parties. TI has taken and continues to take reasonable steps to provide representative and accurate information but may not have conducted destructive testing or chemical analysis on incoming materials and chemicals. TI and TI suppliers consider certain information to be proprietary, and thus CAS numbers and other limited information may not be available for release.

In no event shall TI's liability arising out of such information exceed the total purchase price of the TI part(s) at issue in this document sold by TI to Customer on an annual basis.

OTHER QUALIFIED VERSIONS OF TMP451-Q1 :

- Catalog : TMP451

NOTE: Qualified Version Definitions:

- Catalog - TI's standard catalog product

TAPE AND REEL INFORMATION

REEL DIMENSIONS

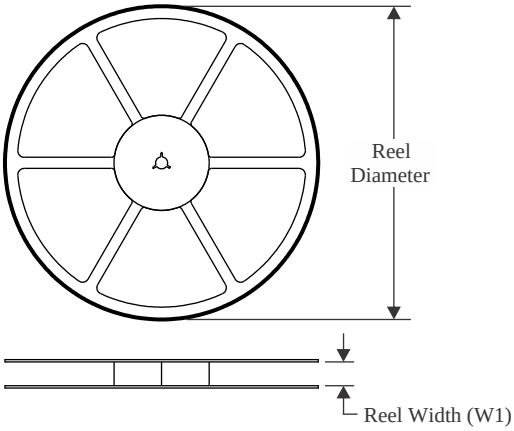

TAPE DIMENSIONS

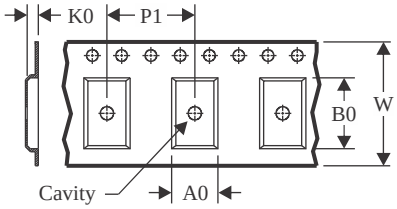

A0	Dimension designed to accommodate the component width
B0	Dimension designed to accommodate the component length
K0	Dimension designed to accommodate the component thickness
W	Overall width of the carrier tape
P1	Pitch between successive cavity centers

QUADRANT ASSIGNMENTS FOR PIN 1 ORIENTATION IN TAPE

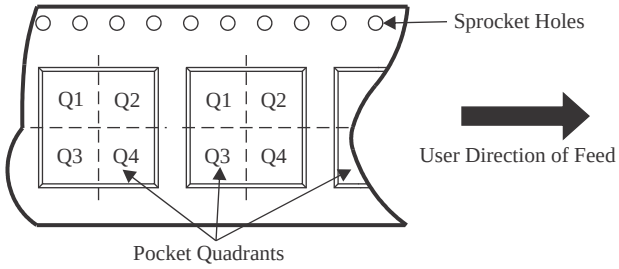

*All dimensions are nominal

Device	Package Type	Package Drawing	Pins	SPQ	Reel Diameter (mm)	Reel Width W1 (mm)	A0 (mm)	B0 (mm)	K0 (mm)	P1 (mm)	W (mm)	Pin1 Quadrant
TMP451AQDQFRQ1	WSON	DQF	8	3000	178.0	8.4	2.3	2.3	1.15	4.0	8.0	Q2
TMP451AQDQFRQ1	WSON	DQF	8	3000	179.0	8.4	2.2	2.2	1.2	4.0	8.0	Q2
TMP451HQDQFRQ1	WSON	DQF	8	3000	178.0	8.4	2.3	2.3	1.15	4.0	8.0	Q2
TMP451HQDQFRQ1	WSON	DQF	8	3000	180.0	8.4	2.2	2.2	1.2	4.0	8.0	Q2
TMP451JQDQFRQ1	WSON	DQF	8	3000	180.0	8.4	2.2	2.2	1.2	4.0	8.0	Q2

TAPE AND REEL BOX DIMENSIONS

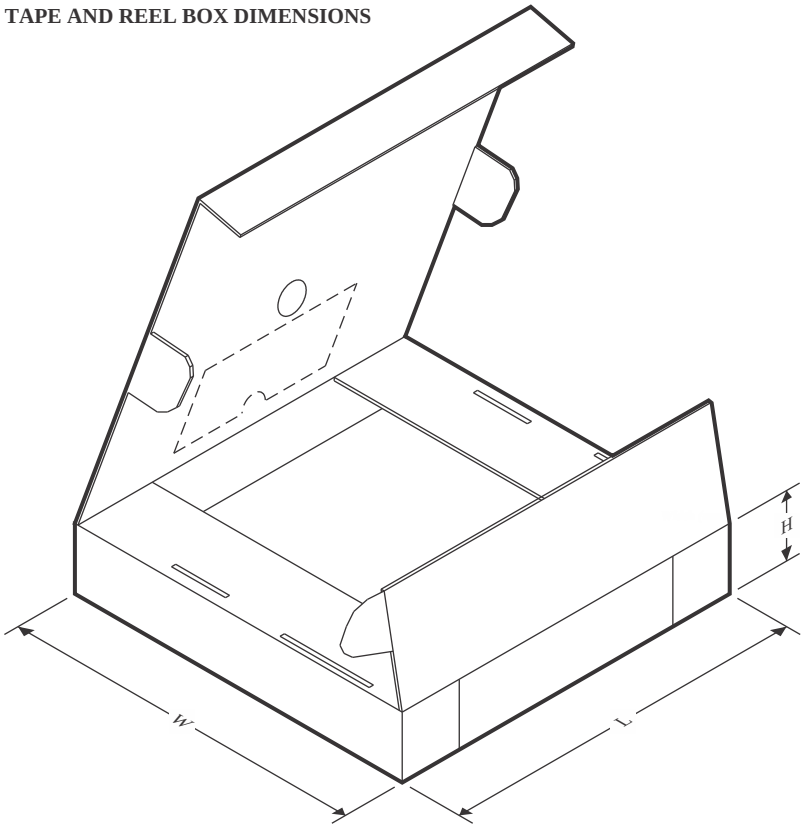

*All dimensions are nominal

Device	Package Type	Package Drawing	Pins	SPQ	Length (mm)	Width (mm)	Height (mm)
TMP451AQDQFRQ1	WSON	DQF	8	3000	205.0	200.0	33.0
TMP451AQDQFRQ1	WSON	DQF	8	3000	200.0	183.0	25.0
TMP451HQDQFRQ1	WSON	DQF	8	3000	205.0	200.0	33.0
TMP451HQDQFRQ1	WSON	DQF	8	3000	200.0	183.0	25.0
TMP451JQDQFRQ1	WSON	DQF	8	3000	200.0	183.0	25.0

DQW0008B



PACKAGE OUTLINE

WSON - 0.8 mm max height

PLASTIC SMALL OUTLINE - NO LEAD

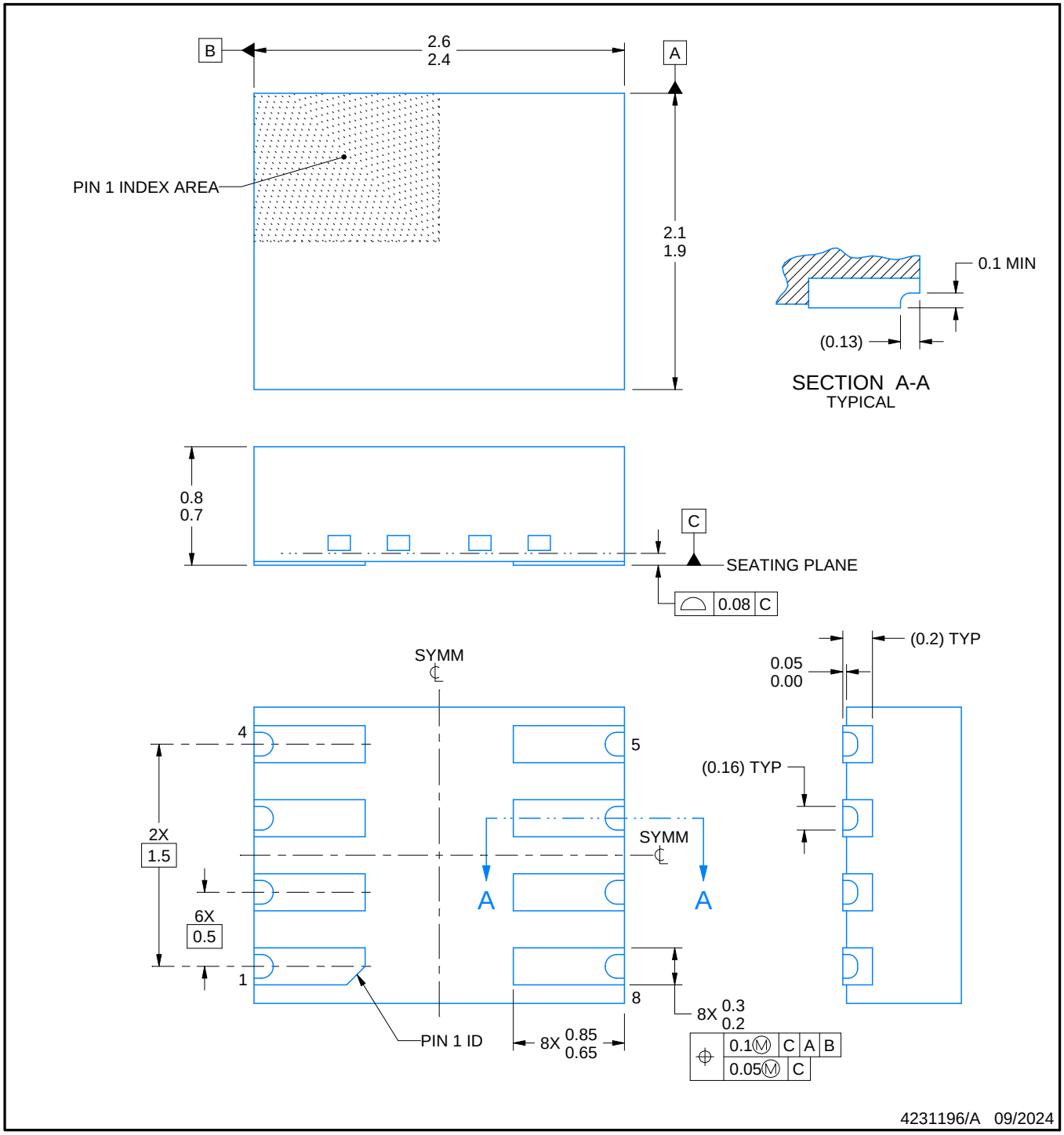

NOTES:

1. All linear dimensions are in millimeters. Any dimensions in parenthesis are for reference only. Dimensioning and tolerancing per ASME Y14.5M.
2. This drawing is subject to change without notice.

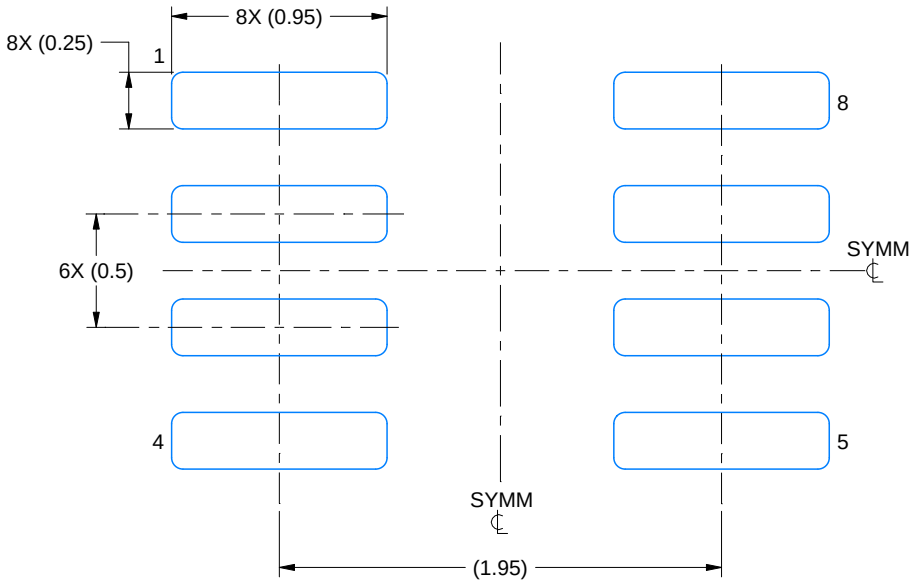

LAND PATTERN EXAMPLE
EXPOSED METAL SHOWN
SCALE:30X

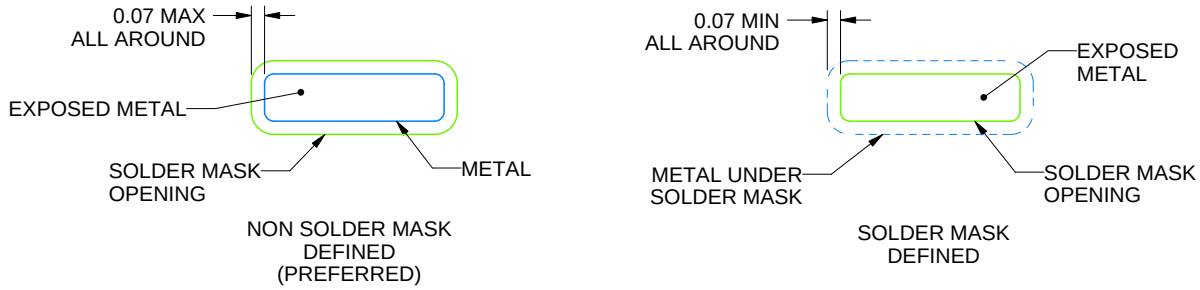

SOLDER MASK DETAILS

4231196/A 09/2024

NOTES: (continued)

3. For more information, see Texas Instruments literature number SLUA271 (www.ti.com/lit/slua271).

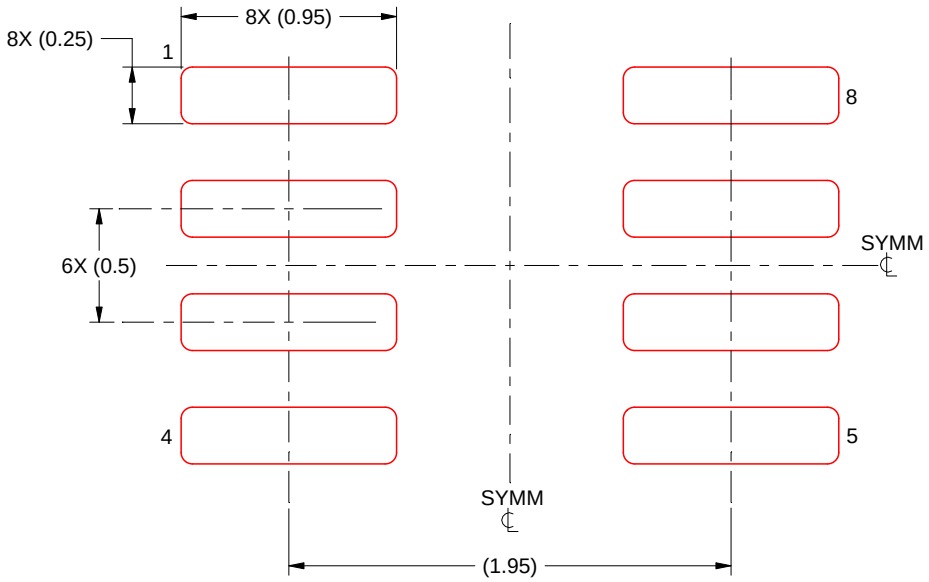

SOLDER PASTE EXAMPLE
BASED ON 0.1 mm THICK STENCIL
SCALE:30X

4231196/A 09/2024

NOTES: (continued)

4. Laser cutting apertures with trapezoidal walls and rounded corners may offer better paste release. IPC-7525 may have alternate design recommendations.

GENERIC PACKAGE VIEW

DQF 8

WSON - 0.8 mm max height

2 x 2, 0.5 mm pitch

PLASTIC SMALL OUTLINE - NO LEAD

This image is a representation of the package family, actual package may vary.
Refer to the product data sheet for package details.

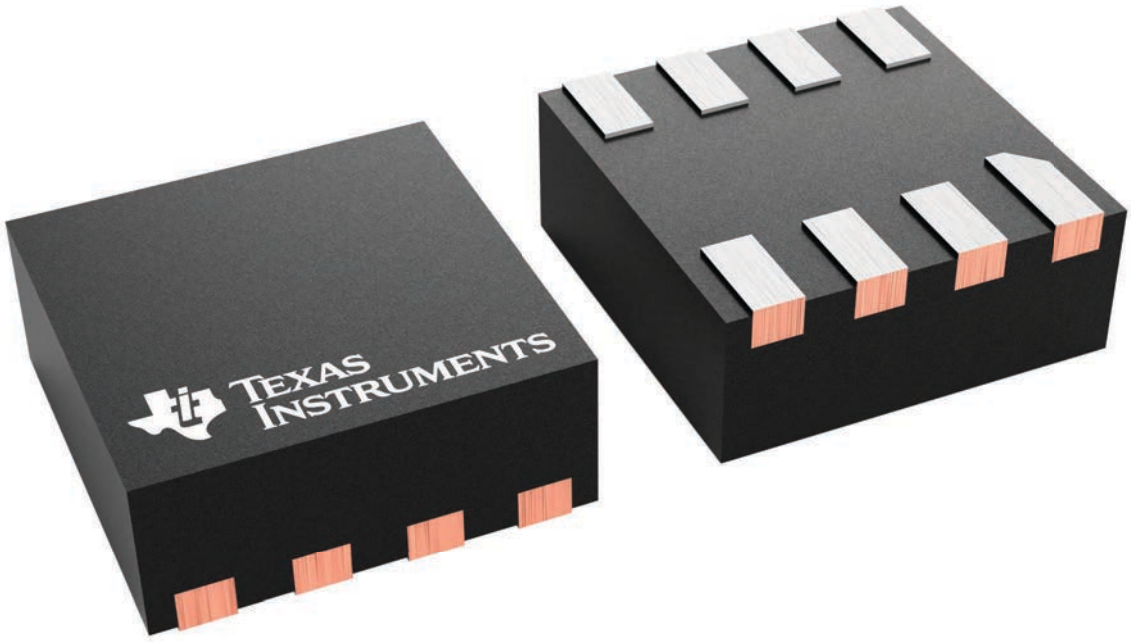

4232898/A

PACKAGE OUTLINE

DQF0008A

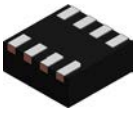

WSON - 0.8 mm max height

PLASTIC SMALL OUTLINE - NO LEAD

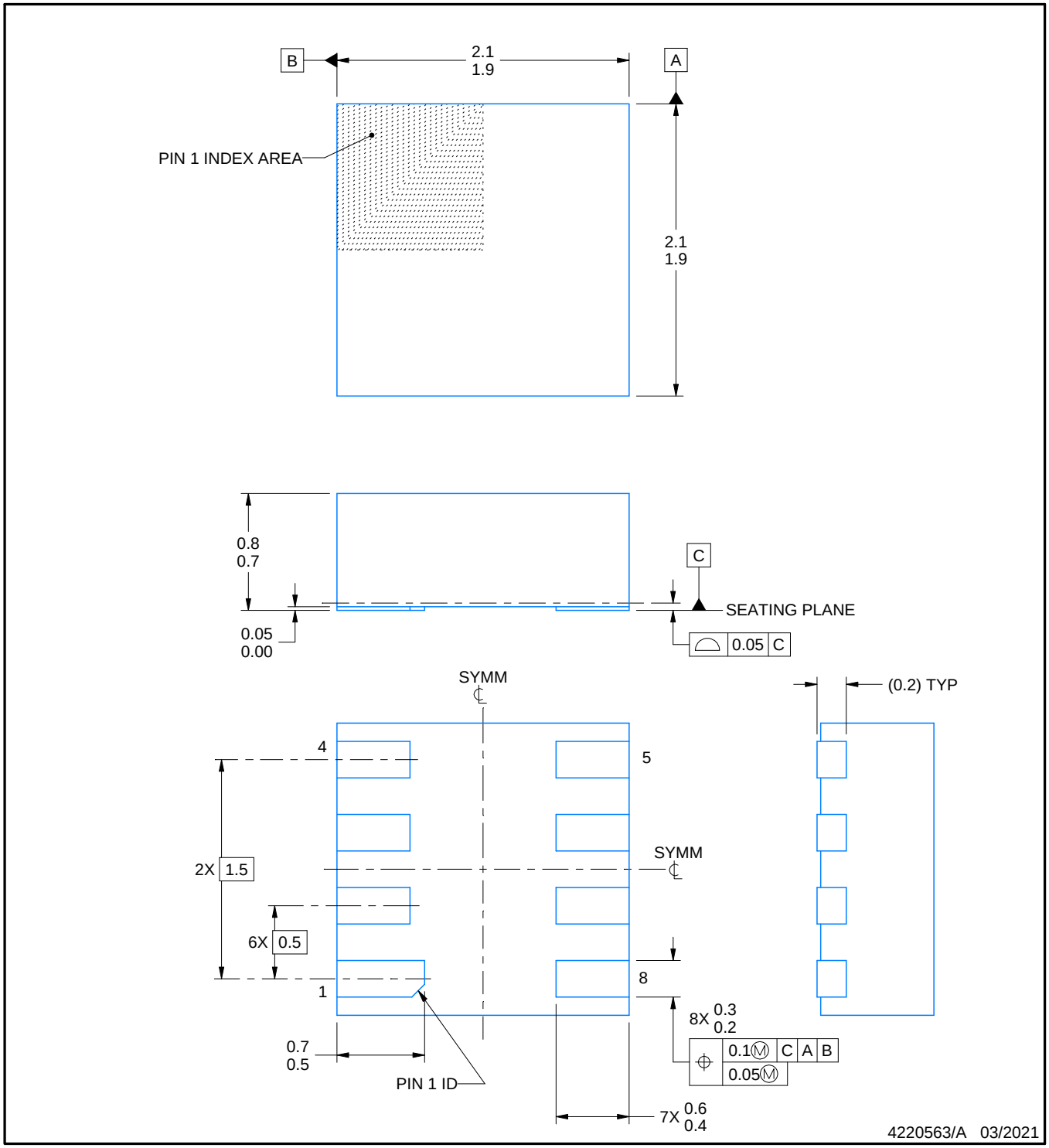

NOTES:

1. All linear dimensions are in millimeters. Any dimensions in parenthesis are for reference only. Dimensioning and tolerancing per ASME Y14.5M.
2. This drawing is subject to change without notice.

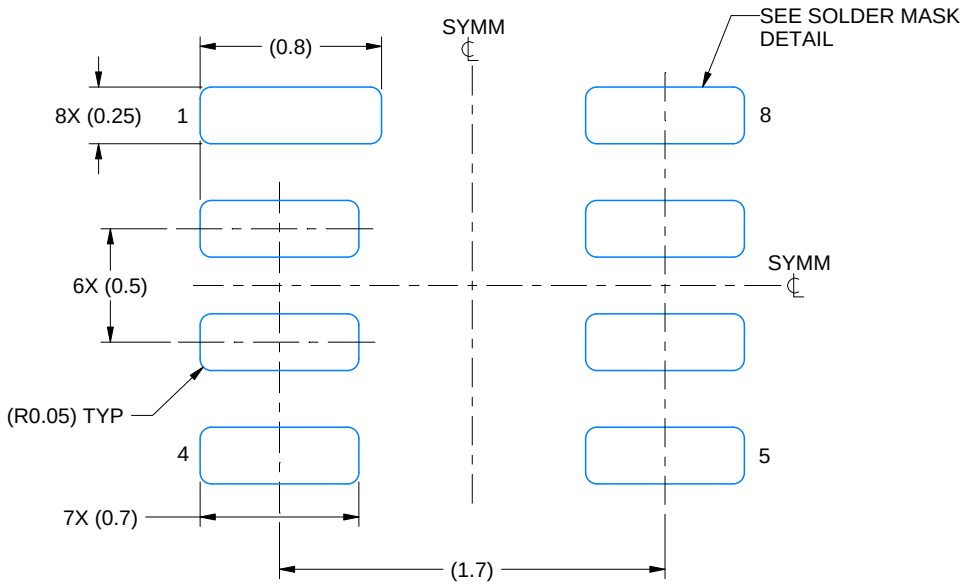

LAND PATTERN EXAMPLE
EXPOSED METAL SHOWN
SCALE: 30X

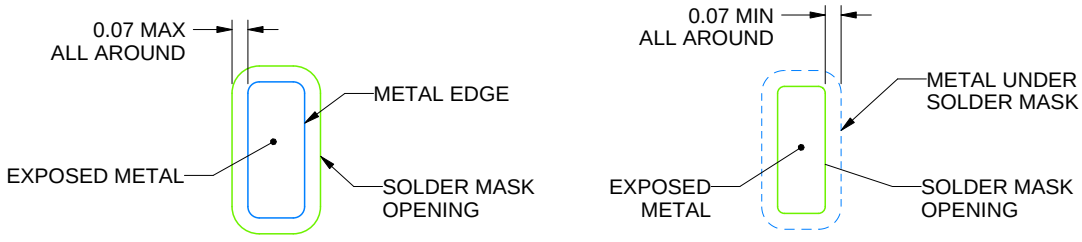

SOLDER MASK DETAILS

4220563/A 03/2021

NOTES: (continued)

3. This package is designed to be soldered to a thermal pad on the board. For more information, see Texas Instruments literature number SLUA271 (www.ti.com/lit/slua271).

EXAMPLE STENCIL DESIGN

DQF0008A

WSON - 0.8 mm max height

PLASTIC SMALL OUTLINE - NO LEAD

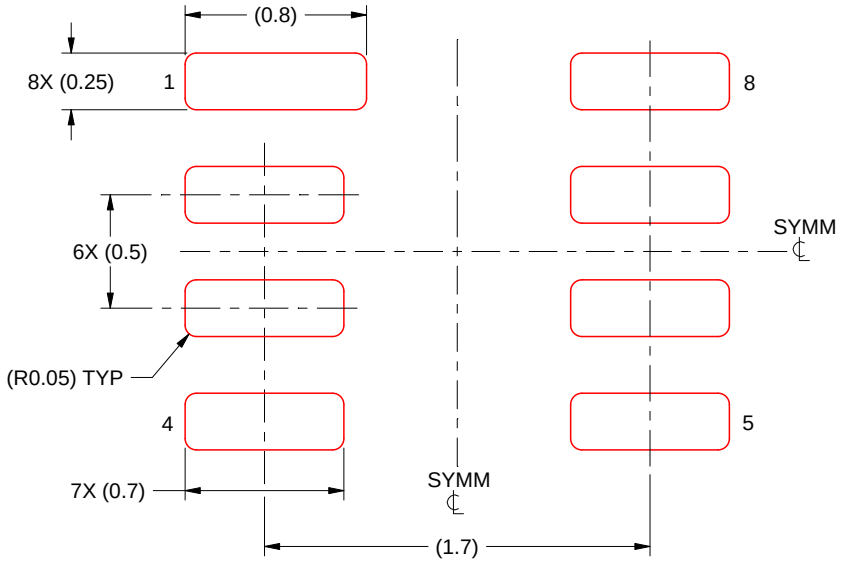

SOLDER PASTE EXAMPLE
BASED ON 0.125 MM THICK STENCIL
SCALE: 30X

4220563/A 03/2021

NOTES: (continued)

4. Laser cutting apertures with trapezoidal walls and rounded corners may offer better paste release. IPC-7525 may have alternate design recommendations.

重要通知和免责声明

TI“按原样”提供技术和可靠性数据（包括数据表）、设计资源（包括参考设计）、应用或其他设计建议、网络工具、安全信息和其他资源，不保证没有瑕疵且不做出任何明示或暗示的担保，包括但不限于对适销性、与某特定用途的适用性或不侵犯任何第三方知识产权的暗示担保。

这些资源可供使用 TI 产品进行设计的熟练开发人员使用。您将自行承担以下全部责任：(1) 针对您的应用选择合适的 TI 产品，(2) 设计、验证并测试您的应用，(3) 确保您的应用满足相应标准以及任何其他安全、安保法规或其他要求。

这些资源如有变更，恕不另行通知。TI 授权您仅可将这些资源用于研发本资源所述的 TI 产品的相关应用。严禁以其他方式对这些资源进行复制或展示。您无权使用任何其他 TI 知识产权或任何第三方知识产权。对于因您对这些资源的使用而对 TI 及其代表造成的任何索赔、损害、成本、损失和债务，您将全额赔偿，TI 对此概不负责。

TI 提供的产品受 TI 销售条款)、TI 通用质量指南 或 ti.com 上其他适用条款或 TI 产品随附的其他适用条款的约束。TI 提供这些资源并不会扩展或以其他方式更改 TI 针对 TI 产品发布的适用的担保或担保免责声明。 除非德州仪器 (TI) 明确将某产品指定为定制产品或客户特定产品，否则其产品均为按确定价格收入目录的标准通用器件。

TI 反对并拒绝您可能提出的任何其他或不同的条款。

版权所有 © 2026，德州仪器 (TI) 公司

最后更新日期：2025 年 10 月