TEXAS INSTRUMENTS
TPS2061, TPS2062, TPS2063
TPS2065, TPS2066, TPS2067
ZHCSRR9K – DECEMBER 2003 – REVISED JUNE 2024

限流、配电开关

1 特性

- 70mΩ 高侧 MOSFET
- 1A 持续电流
- 过热和短路保护
- 精确电流限制
  （最小值 1.1A，最大值 1.9A）
- 工作电压范围：2.7V 至 5.5V
- 0.6ms 典型上升时间
- 欠压锁定
- 抗尖峰脉冲故障报告 ($\overline{OC}$)
- 上电期间无 $\overline{OC}$ 尖峰脉冲
- 1 µA 最大待机电源电流
- 双向开关
- 环境温度范围：-40°C 至 85°C
- 内置软启动
- UL 认证 - 文件号 E169910

2 应用

- 高容性负载
- 短路保护

3 说明

TPS206x 配电开关适用于可能具有高容性负载和发生短路的应用。此器件包含 70mΩ N 沟道 MOSFET 电源开关，适用于需要在单个封装内包含多个电源开关的配电系统。每个开关由一个逻辑使能输入控制。栅极驱动由一个内部电荷泵提供，此电荷泵设计用于控制电源开关上升时间和下降时间以大大减少切换期间的电流涌入。电荷泵无需外部组件并可在低至 2.7V 的电源电压下工作。

GENERAL SWITCH CATALOG

33 mΩ, Single	80 mΩ, Single	80 mΩ, Dual	80 mΩ, Dual	80 mΩ, Triple	80 mΩ, Quad	80 mΩ, Quad
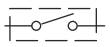	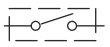	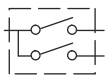	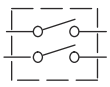	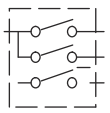	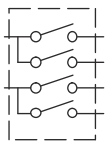	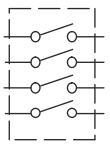
TPS201xA 0.2 A to 2 A TPS202x 0.2 A to 2 A TPS203x 0.2 A to 2 A	TPS2014 600 mA TPS2015 1 A TPS2041B 500 mA TPS2051B 500 mA TPS2045A 250 mA TPS2049 100 mA TPS2055A 250 mA TPS2061 1 A TPS2065 1 A TPS2068 1.5 A TPS2069 1.5 A	TPS2042B 500 mA TPS2052B 500 mA TPS2046B 250 mA TPS2056 250 mA TPS2062 1 A TPS2066 1 A TPS2060 1.5 A TPS2064 1.5 A	TPS2080 500 mA TPS2081 500 mA TPS2082 500 mA TPS2090 250 mA TPS2091 250 mA TPS2092 250 mA	TPS2043B 500 mA TPS2053B 500 mA TPS2047B 250 mA TPS2057A 250 mA TPS2063 1 A TPS2067 1 A	TPS2044B 500 mA TPS2054B 500 mA TPS2048A 250 mA TPS2058 250 mA	TPS2085 500 mA TPS2086 500 mA TPS2087 500 mA TPS2095 250 mA TPS2096 250 mA TPS2097 250 mA

本资源的原文使用英文撰写。 为方便起见，TI 提供了译文；由于翻译过程中可能使用了自动化工具，TI 不保证译文的准确性。 为确认准确性，请务必访问 ti.com 参考最新的英文版本（控制文档）。

Table of Contents

1 特性 1
2 应用 1
3 说明 1
4 说明 (续) 3
5 Pin Configuration and Functions 4
6 Specifications 6
6.1 Absolute Maximum Ratings 6
6.2 Recommended Operating Conditions 6
6.3 Thermal Information 6
6.4 Electrical Characteristics 6
6.5 Typical Characteristics (TPS2061, TPS2062, TPS2065, and TPS2066) 8
6.6 Typical Characteristics (TPS2063 & TPS2067) 11
7 Parameter Measurement Information 17
8 Detailed Description 18
8.1 Functional Block Diagram 18
8.2 Power Switch 19
8.3 Charge Pump 19
8.4 Driver 19
8.5 Enable ($\overline{ENx}$ or ENx) 20
8.6 Current Sense 20
8.7 Overcurrent 20
8.8 Overcurrent ($\overline{OCx}$) 21
8.9 Thermal Sense 21
8.10 Undervoltage Lockout 21
9 Application and Implementation 22
9.1 Application Information 22
10 Device and Documentation Support 28
10.1 Device Support 28
10.2 Documentation Support 28
10.3 接收文档更新通知 28
10.4 支持资源 28
10.5 Trademarks 28
10.6 静电放电警告 28
10.7 术语表 28
11 Revision History 28
12 Mechanical, Packaging, and Orderable Information 30

Copyright © 2024 Texas Instruments Incorporated

4 说明（续）

当输出负载超过限流阈值或者短路出现时，该器件通过切换至恒定电流模式，并通过将过流 ($\overline{OCx}$) 下拉至逻辑输出低电平来将输出电流限制在安全水平上。当持续重过载和短路增加了开关内的功率耗散时，将引起结温上升，这时一个过热保护电路将关闭此开关以避免器件损坏。一旦器件充分冷却，此器件将自动从热关断中恢复。内部电路确保此开关在有效输入电压出现前保持关闭状态。这个配电开关设计用于将电流限值的典型值设定在 1.5A 上。

Copyright © 2024 Texas Instruments Incorporated

5 Pin Configuration and Functions

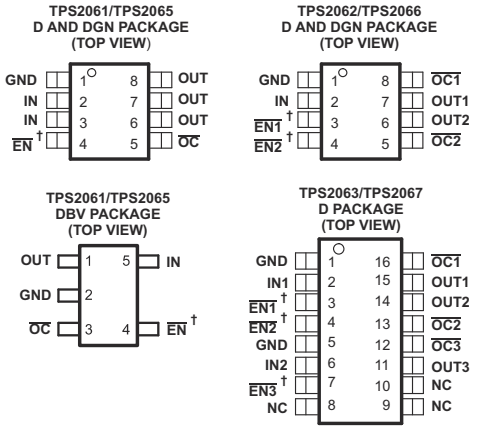

† All Enable Inputs Are Active High For TPS2065, TPS2066, and TPS2067

表 5-1. Pin Functions (TPS2061 and TPS2065)

PINS					I/O	DESCRIPTION
	D or DGN Package		DBV Package			
NAME	TPS2061	TPS2065	TPS2061	TPS2065		
$\overline{EN}$	4	-	4	-	I	Enable input, logic low turns on power switch
EN	-	4	-	4	I	Enable input, logic high turns on power switch
GND	1	1	2	2		Ground
IN	2, 3	2,3	5	5	I	Input voltage
$\overline{OC}$	5	5	3	3	O	Overcurrent, open-drain output, active-low
OUT	6, 7, 8	6, 7, 8	1	1	O	Power-switch output
PowerPAD™	-	-	-	-		Internally connected to GND; used to heat-sink the part to the circuit board traces. Must be connected to GND pin.

表 5-2. Pin Functions (TPS2062 and TPS2066)

PINS			I/O	DESCRIPTION
NAME	NO.			
	TPS2062	TPS2066		
$\overline{EN1}$	3	-	I	Enable input, logic low turns on power switch IN-OUT1
$\overline{EN2}$	4	-	I	Enable input, logic low turns on power switch IN-OUT2
EN1	-	3	I	Enable input, logic high turns on power switch IN-OUT1
EN2	-	4	I	Enable input, logic high turns on power switch IN-OUT2
GND	1	1		Ground
IN	2	2	I	Input voltage
$\overline{OC1}$	8	8	O	Overcurrent, open-drain output, active low, IN-OUT1
$\overline{OC2}$	5	5	O	Overcurrent, open-drain output, active low, IN-OUT2
OUT1	7	7	O	Power-switch output, IN-OUT1
OUT2	6	6	O	Power-switch output, IN-OUT2
PowerPAD™	-	-		Internally connected to GND; used to heat-sink the part to the circuit board traces. Must be connected to GND pin.

Copyright © 2024 Texas Instruments Incorporated

表 5-3. Pin Functions (TPS2063 and TPS2067)

PINS			I/O	DESCRIPTION
NAME	TPS2063	TPS2067		
$\overline{EN1}$	3	–	I	Enable input, logic low turns on power switch IN1-OUT1
$\overline{EN2}$	4	–	I	Enable input, logic low turns on power switch IN1-OUT2
$\overline{EN3}$	7	–	I	Enable input, logic low turns on power switch IN2-OUT3
EN1	–	3	I	Enable input, logic high turns on power switch IN1-OUT1
EN2	–	4	I	Enable input, logic high turns on power switch IN1-OUT2
EN3	–	7	I	Enable input, logic high turns on power switch IN2-OUT3
GND	1, 5	1, 5		Ground
IN1	2	2	I	Input voltage for OUT1 and OUT2
IN2	6	6	I	Input voltage for OUT3
NC	8, 9, 10	8, 9, 10		No connection
$\overline{OC1}$	16	16	O	Overcurrent, open-drain output, active low, IN1-OUT1
$\overline{OC2}$	13	13	O	Overcurrent, open-drain output, active low, IN1-OUT2
$\overline{OC3}$	12	12	O	Overcurrent, open-drain output, active low, IN2-OUT3
OUT1	15	15	O	Power-switch output, IN1-OUT1
OUT2	14	14	O	Power-switch output, IN1-OUT2
OUT3	11	11	O	Power-switch output, IN2-OUT3

Copyright © 2024 Texas Instruments Incorporated

6 Specifications

6.1 Absolute Maximum Ratings

over operating free-air temperature range unless otherwise noted(1)

		UNIT
Input voltage range, $V_{I(IN)}$ (2)		-0.3 V to 6 V
Output voltage range, $V_{O(OUT)}$ (2), $V_{O(OUTx)}$		-0.3 V to 6 V
Input voltage range, $V_{I(\overline{EN})}$, $V_{I(EN)}$, $V_{I(\overline{ENx})}$, $V_{I(ENx)}$		-0.3 V to 6 V
Voltage range, $V_{I(\overline{OC})}$, $V_{I(\overline{OCx})}$		-0.3 V to 6 V
Continuous output current, $I_{O(OUT)}$, $I_{O(OUTx)}$		Internally limited
Operating virtual junction temperature range, T_J		-40°C to 150°C
Electrostatic discharge (ESD) protection	Human body model	2 kV
	Charge device model (CDM)	500 V

(1) Stresses beyond those listed under *absolute maximum ratings* may cause permanent damage to the device. These are stress ratings only, and functional operation of the device at these or any other conditions beyond those indicated under *recommended operating conditions* is not implied. Exposure to absolute-maximum-rated conditions for extended periods may affect device reliability.
(2) All voltages are with respect to GND.

6.2 Recommended Operating Conditions

	MIN	MAX	UNIT
Input voltage, $V_{I(IN)}$	2.7	5.5	V
Input voltage, $V_{I(\overline{EN})}$, $V_{I(EN)}$, $V_{I(\overline{ENx})}$, $V_{I(ENx)}$	0	5.5	V
Continuous output current, $I_{O(OUT)}$, $I_{O(OUTx)}$	0	1	A
Operating virtual junction temperature, T_J	-40	125	°C

6.3 Thermal Information

THERMAL METRIC(1)		D (SOIC)		DBV (SOT-23)	DGN (HVSSOP)	UNIT
		8 PINS	16 PINS	5 PINS	8 PINS	
$R_{\theta JA}$	Junction-to-ambient thermal resistance	119.3	81.6	208.6	53.6	°C/W
$R_{\theta JC(top)}$	Junction-to-case (top) thermal resistance	67.6	42.7	122.9	58.7	°C/W
$R_{\theta JB}$	Junction-to-board thermal resistance	59.6	39.1	37.8	35.5	°C/W
ψ_{JT}	Junction-to-top characterization parameter	20.3	10.4	14.6	2.7	°C/W
ψ_{JB}	Junction-to-board characterization parameter	59.1	38.8	36.9	35.3	°C/W
$R_{\theta JC(bot)}$	Junction-to-case (bottom) thermal resistance	N/A	N/A	N/A	6.7	°C/W

(1) For more information about traditional and new thermal metrics, see the *Semiconductor and IC Package Thermal Metrics* application report.

6.4 Electrical Characteristics

over recommended operating junction temperature range, $V_{I(IN)}$ = 5.5 V, I_O = 1 A, $V_{I(\overline{ENx})}$ = 0 V, or $V_{I(ENx)}$ = 5.5 V (unless otherwise noted)

PARAMETER		TEST CONDITIONS(1)		MIN	TYP	MAX	UNIT
POWER SWITCH							
$r_{DS(on)}$	Static drain-source on-state resistance, 5-V operation and 3.3-V operation	$V_{I(IN)}$ = 5 V or 3.3 V, I_O = 1 A, -40°C ≤ T_J ≤ 125°C	D and DGN packages		70	135	mΩ
			DBV package		95	140	
	Static drain-source on-state resistance, 2.7-V operation	$V_{I(IN)}$ = 2.7 V, I_O = 1 A, -40°C ≤ T_J ≤ 125°C	D and DGN packages		75	150	mΩ

Copyright © 2024 Texas Instruments Incorporated

6.4 Electrical Characteristics（续）

over recommended operating junction temperature range, $V_{I(IN)}$ = 5.5 V, I_O = 1 A, $V_{I(\overline{ENx})}$ = 0 V, or $V_{I(ENx)}$ = 5.5 V (unless otherwise noted)

PARAMETER		TEST CONDITIONS[1]			MIN	TYP	MAX	UNIT
t_r	Rise time, output	$V_{I(IN)}$ = 5.5 V	C_L = 1 μF, R_L = 5 Ω, T_J = 25°C			0.6	1.5	ms
		$V_{I(IN)}$ = 2.7 V				0.4	1	
t_f	Fall time, output	$V_{I(IN)}$ = 5.5 V			0.05		0.5	
		$V_{I(IN)}$ = 2.7 V			0.05		0.5	
ENABLE INPUT $\overline{EN}$ OR EN								
V_{IH}	High-level input voltage	2.7 V ≤ $V_{I(IN)}$ ≤ 5.5 V			2			V
V_{IL}	Low-level input voltage	2.7 V ≤ $V_{I(IN)}$ ≤ 5.5 V					0.8	
I_I	Input current	$V_{I(\overline{ENx})}$ = 0 V or 5.5 V, $V_{I(ENx)}$ = 0 V or 5.5 V			-0.5		0.5	μA
t_{on}	Turnon time	C_L = 100 μF, R_L = 5 Ω					3	ms
t_{off}	Turnoff time	C_L = 100 μF, R_L = 5 Ω					10	
CURRENT LIMIT								
I_{OS}	Short-circuit output current	$V_{I(IN)}$ = 5 V, OUT connected to GND, device enabled into short-circuit		T_J = 25°C	1.1	1.5	1.9	A
				-40°C ≤ T_J ≤ 125°C	1.1	1.5	2.1	
I_{OC} [2]	Overcurrent trip threshold	$V_{I(IN)}$ = 5 V, current ramp (≤ 100 A/s) on OUT	TPS2063, TPS2067		1.6	2.4	3.0	A
SUPPLY CURRENT (TPS2061, TPS2065)								
Supply current, low-level output		No load on OUT, $V_{I(\overline{ENx})}$ = 5.5 V, or $V_{I(ENx)}$ = 0 V		T_J = 25°C		0.5	1	μA
				-40°C ≤ T_J ≤ 125°C		0.5	5	
Supply current, high-level output		No load on OUT, $V_{I(\overline{ENx})}$ = 0 V, or $V_{I(ENx)}$ = 5.5 V	TPS2061 TPS2065	T_J = 25°C		75	95	μA
				-40°C ≤ T_J ≤ 125°C		75	95	
Leakage current		OUT connected to ground, $V_{I(\overline{EN})}$ = 5.5 V, or $V_{I(EN)}$ = 0 V		-40°C ≤ T_J ≤ 125°C		1		μA
Reverse leakage current		$V_{I(OUTx)}$ = 5.5 V, IN = ground		T_J = 25°C		0		μA
SUPPLY CURRENT (TPS2062, TPS2066)								
Supply current, low-level output		No load on OUT, $V_{I(\overline{ENx})}$ = 5.5 V, or $V_{I(ENx)}$ = 0 V		T_J = 25°C		0.5	1	μA
				-40°C ≤ T_J ≤ 125°C		0.5	5	
Supply current, high-level output		No load on OUT, $V_{I(\overline{ENx})}$ = 0 V, or $V_{I(ENx)}$ = 5.5 V		T_J = 25°C		95	120	μA
				-40°C ≤ T_J ≤ 125°C		95	120	
Leakage current		OUT connected to ground, $V_{I(/ENx)}$ = 5.5 V, or $V_{I(ENx)}$ = 0 V		-40°C ≤ T_J ≤ 125°C		1		μA
Reverse leakage current		$V_{I(OUTx)}$ = 5.5 V, IN = ground		T_J = 25°C		0.2		μA
SUPPLY CURRENT (TPS2063, TPS2067)								
Supply current, low-level output		No load on OUT, $V_{I(\overline{ENx})}$ = 0 V		T_J = 25°C		0.5	2	μA
				-40°C ≤ T_J ≤ 125°C		0.5	10	
Supply current, high-level output		No load on OUT, $V_{I(\overline{ENx})}$ = 5.5 V		T_J = 25°C		65	90	μA
				-40°C ≤ T_J ≤ 125°C		65	110	
Leakage current		OUT connected to ground, $V_{I(\overline{ENx})}$ = 5.5 V, or $V_{I(ENx)}$ = 0 V		-40°C ≤ T_J ≤ 125°C		1		μA
Reverse leakage current		$V_{I(OUTx)}$ = 5.5 V, INx = ground		T_J = 25°C		0.2		μA
UNDERVOLTAGE LOCKOUT (TPS2063, TPS2067)								
Low-level input voltage, IN					2		2.5	V
Hysteresis, IN		T_J = 25°C				75		mV
UNDERVOLTAGE LOCKOUT (TPS2061, TPS2062, TPS2065, TPS2066)								
Low-level input voltage, IN					2		2.6	V
Hysteresis, IN		T_J = 25°C				75		mV
OVERCURRENT $\overline{OC1}$ and $\overline{OC2}$								
Output low voltage, $V_{OL(OCx)}$		$I_{O(\overline{OCx})}$ = 5 mA					0.4	V

Copyright © 2024 Texas Instruments Incorporated

6.4 Electrical Characteristics（续）

over recommended operating junction temperature range, $V_{I(IN)}$ = 5.5 V, I_O = 1 A, $V_{I(\overline{ENx})}$ = 0 V, or $V_{I(ENx)}$ = 5.5 V (unless otherwise noted)

PARAMETER	TEST CONDITIONS(1)	MIN	TYP	MAX	UNIT
Off-state current	$V_{O(\overline{OCx})}$ = 5 V or 3.3 V			1	μA
$\overline{OC}$ deglitch	$\overline{OCx}$ assertion or deassertion	4	8	15	ms
THERMAL SHUTDOWN(3)					
Thermal shutdown threshold		135			°C
Recovery from thermal shutdown		125			°C
Hysteresis			10		°C

(1) Pulse-testing techniques maintain junction temperature close to ambient temperature; thermal effects must be taken into account separately.
(2) TPS2061, TSP2062, TPS2065, and TPS2066 do not have overcurrent trip threshold. Current is limited to I_{OS} under different test condition. Check 节 8.7 for more details.
(3) The thermal shutdown only reacts under overcurrent conditions.

6.5 Typical Characteristics (TPS2061, TPS2062, TPS2065, and TPS2066)

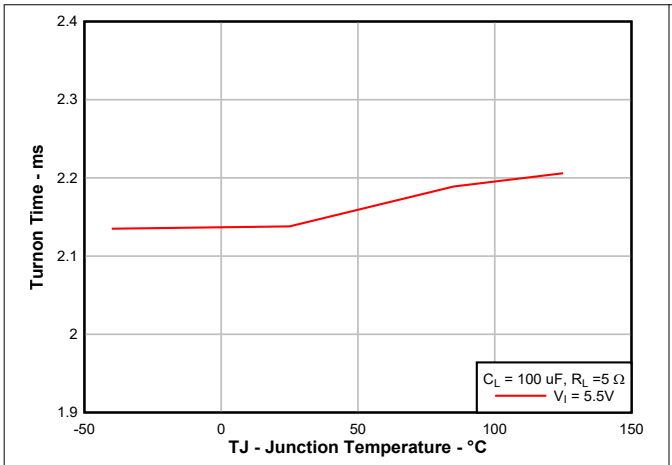

图 6-1. Turnon Time vs Junction Temperature

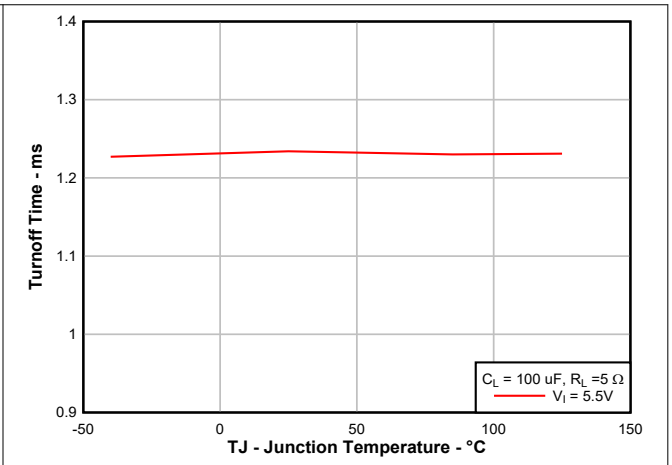

图 6-2. Turnoff Time vs Junction Temperature

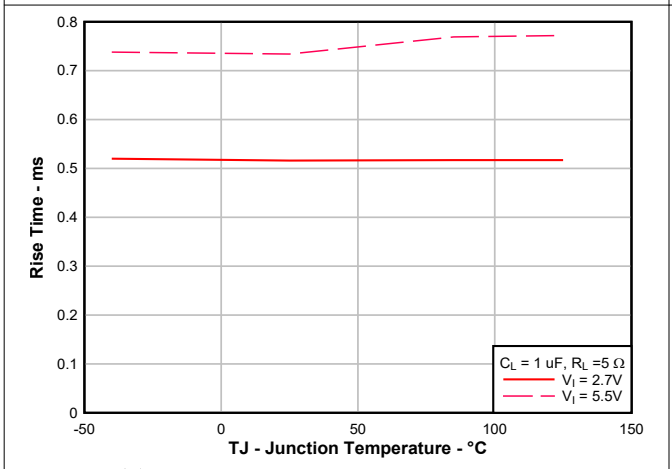

图 6-3. Rise Time vs Junction Temperature

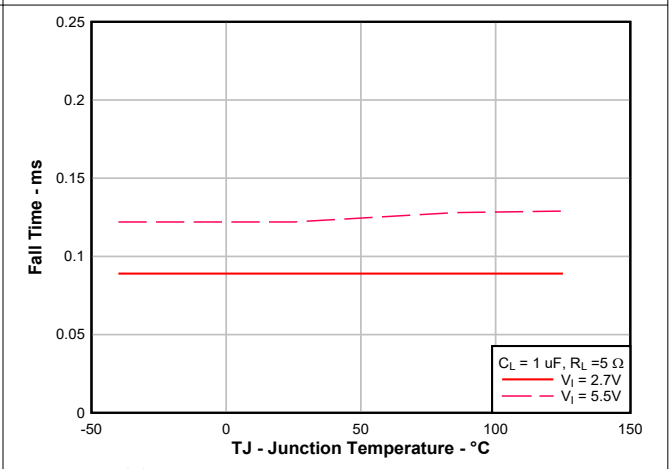

图 6-4. Fall Time vs Junction Temperature

Copyright © 2024 Texas Instruments Incorporated

6.5 Typical Characteristics (TPS2061, TPS2062, TPS2065, and TPS2066) (continued)

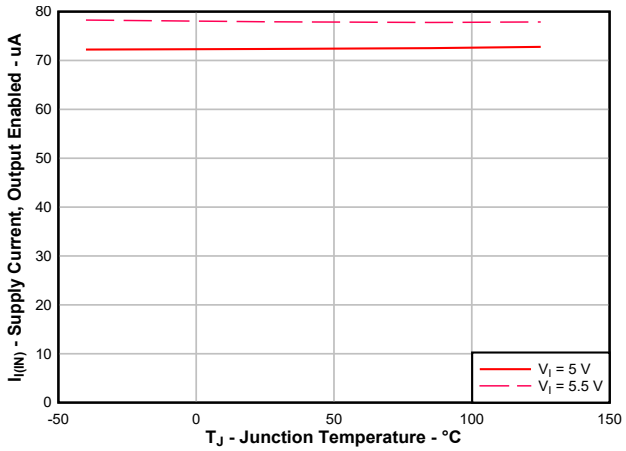

图 6-5. TPS2065DBV Supply Current, Output Enabled vs Junction Temperature

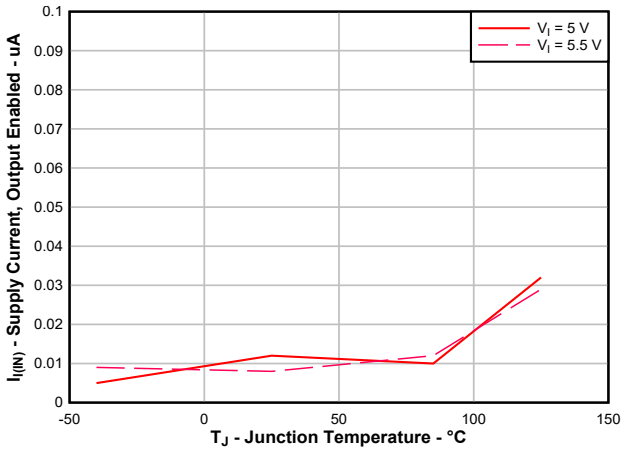

图 6-6. TPS2065DBV Supply Current, Output Disabled vs Junction Temperature

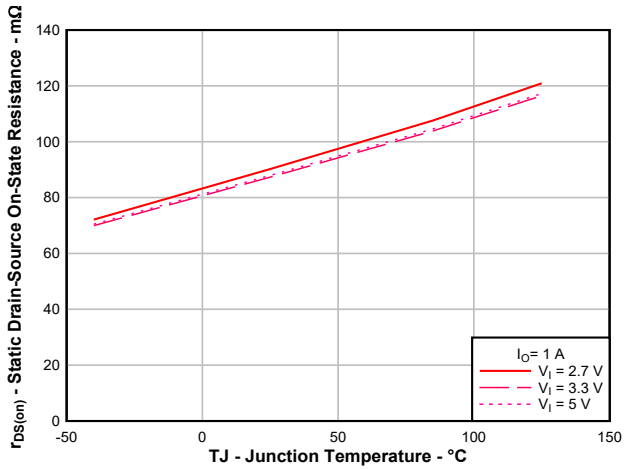

图 6-7. DBV Package Static Drain-Source on-State Resistance vs Junction Temperature

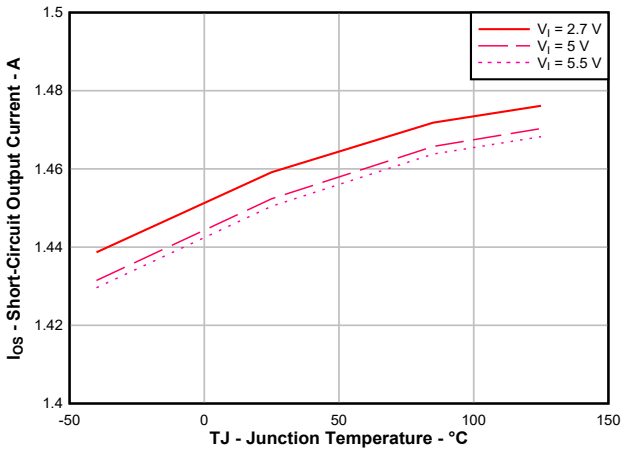

图 6-8. Short-Circuit Output Current vs Junction Temperature

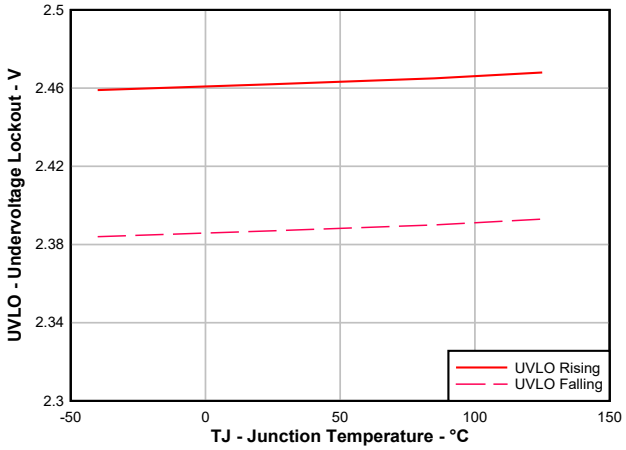

图 6-9. Undervoltage Lockout vs Junction Temperature

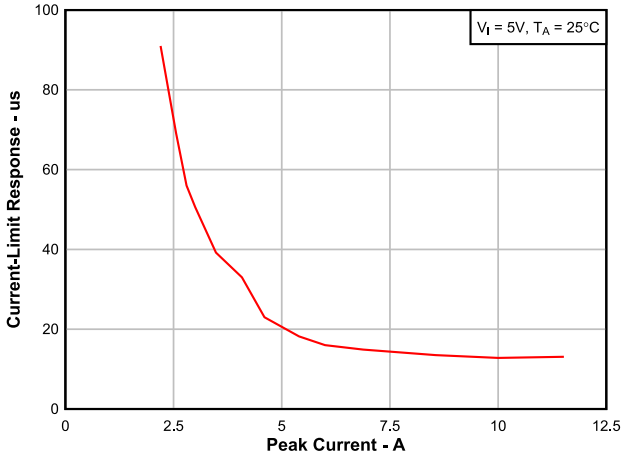

图 6-10. Current-Limit Response vs Peak Current

Copyright © 2024 Texas Instruments Incorporated

6.5 Typical Characteristics (TPS2061, TPS2062, TPS2065, and TPS2066) (continued)

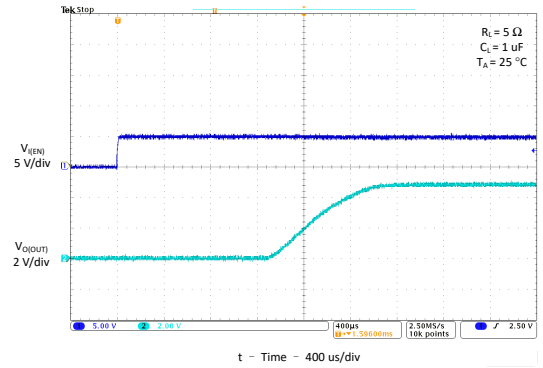

图 6-11. Turnon Delay and Rise Time With 1-µF Load

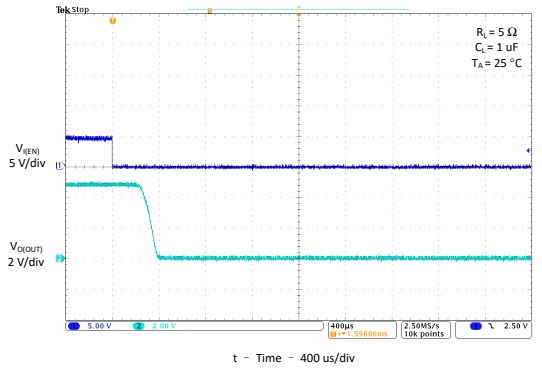

图 6-12. Turnoff Delay and Fall Time With 1-µF Load

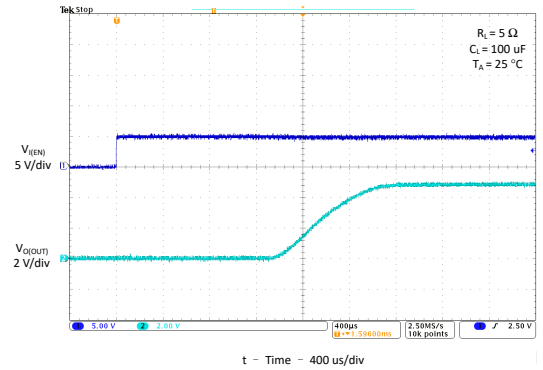

图 6-13. Turnon Delay and Rise Time With 100-µF Load

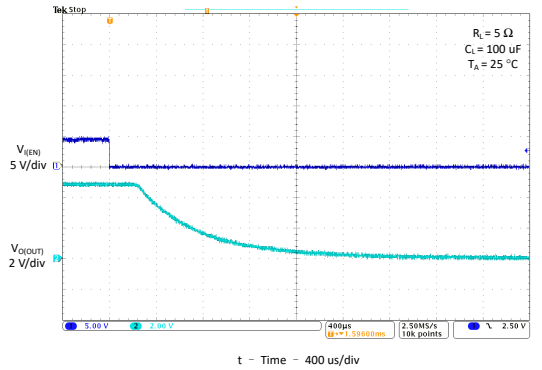

图 6-14. Turnoff Delay and Fall Time With 100-µF Load

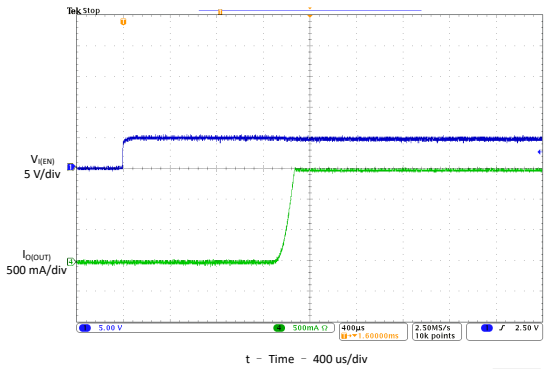

图 6-15. Short-Circuit Current, Device Enabled Into Short

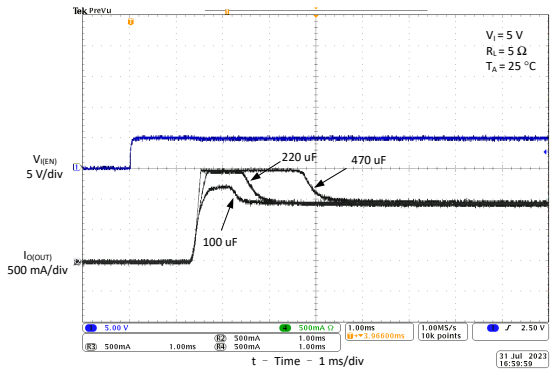

图 6-16. Inrush Current With Different Load Capacitance

Copyright © 2024 Texas Instruments Incorporated

6.5 Typical Characteristics (TPS2061, TPS2062, TPS2065, and TPS2066) (continued)

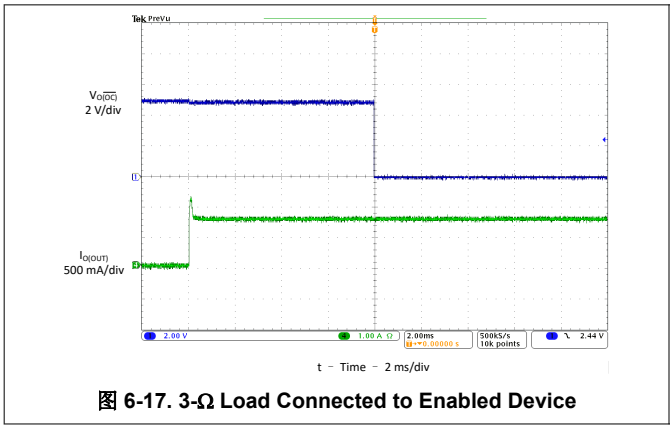

图 6-17. 3-Ω Load Connected to Enabled Device

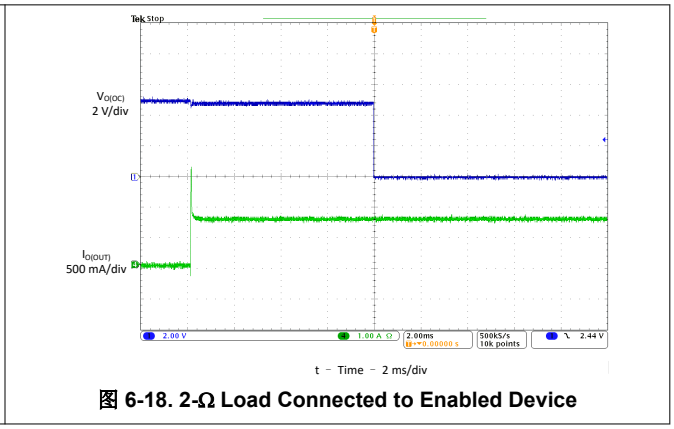

图 6-18. 2-Ω Load Connected to Enabled Device

6.6 Typical Characteristics (TPS2063 & TPS2067)

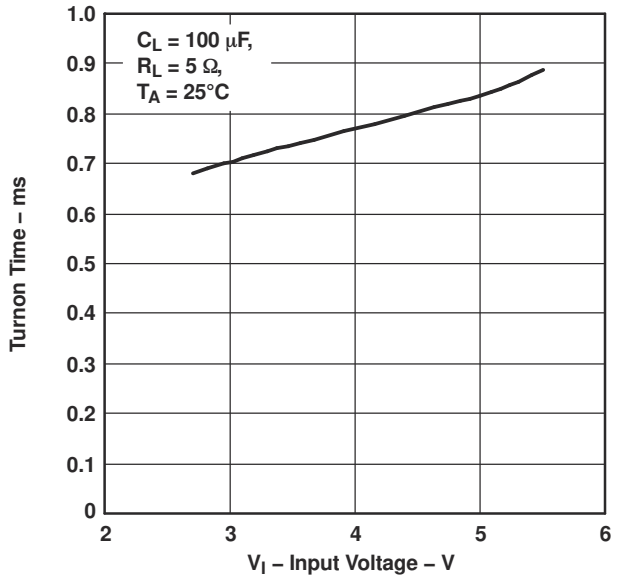

图 6-19. TURNON TIME vs INPUT VOLTAGE

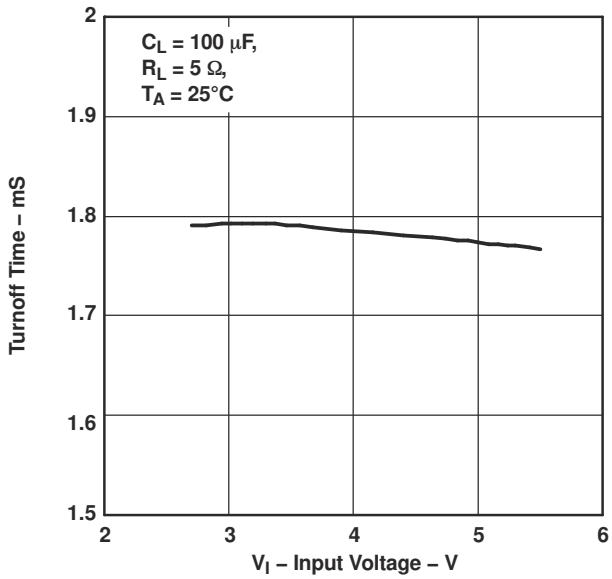

图 6-20. TURNOFF TIME vs INPUT VOLTAGE

Copyright © 2024 Texas Instruments Incorporated

6.6 Typical Characteristics (TPS2063 & TPS2067) (continued)

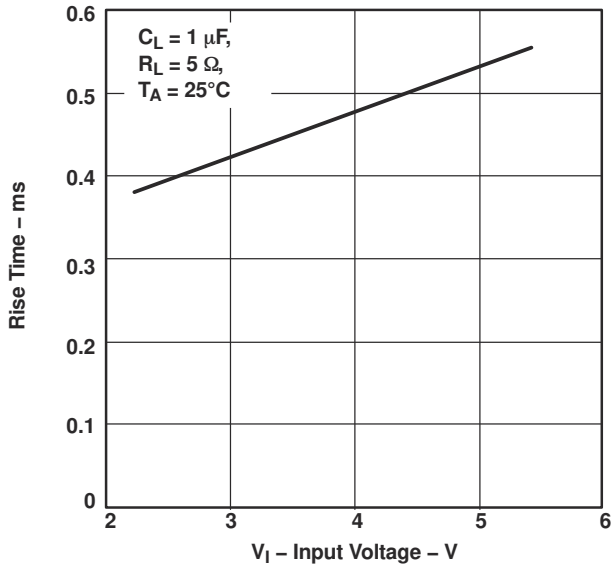

图 6-21. RISE TIME vs INPUT VOLTAGE

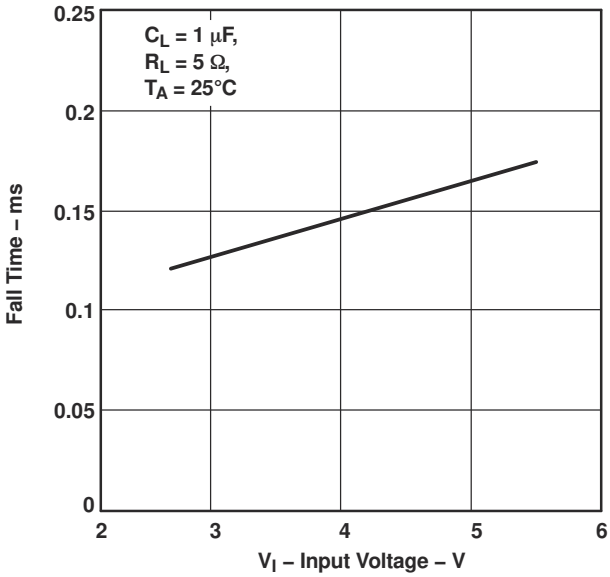

图 6-22. FALL TIME vs INPUT VOLTAGE

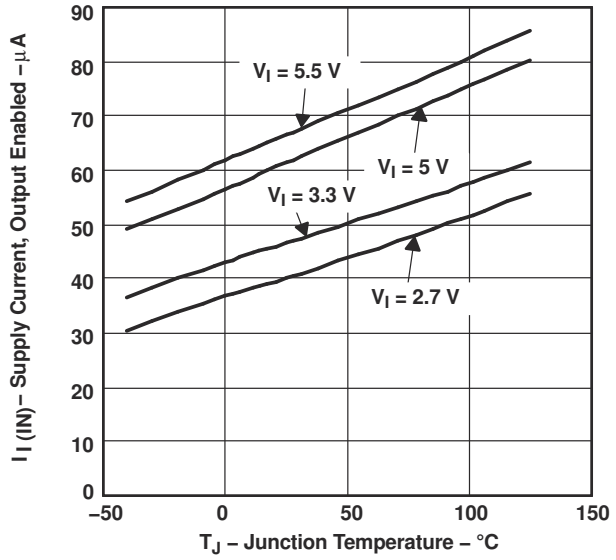

图 6-23. TPS2063, TPS2067 SUPPLY CURRENT, OUTPUT ENABLED vs JUNCTION TEMPERATURE

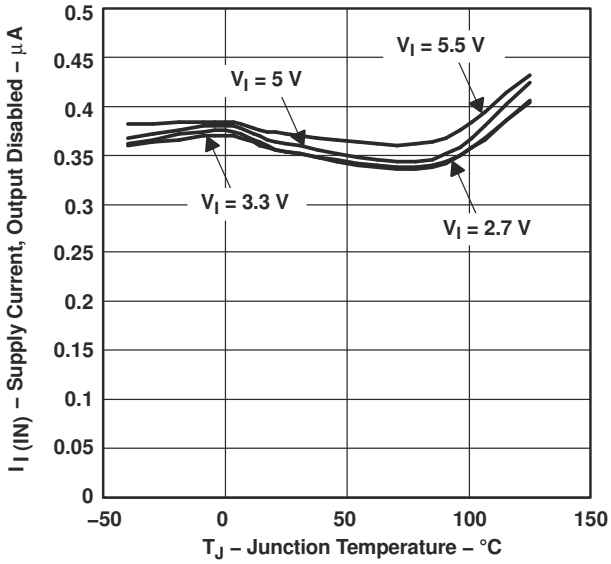

图 6-24. TPS2063, TPS2067 SUPPLY CURRENT, OUTPUT DISABLED vs JUNCTION TEMPERATURE

Copyright © 2024 Texas Instruments Incorporated

6.6 Typical Characteristics (TPS2063 & TPS2067) (continued)

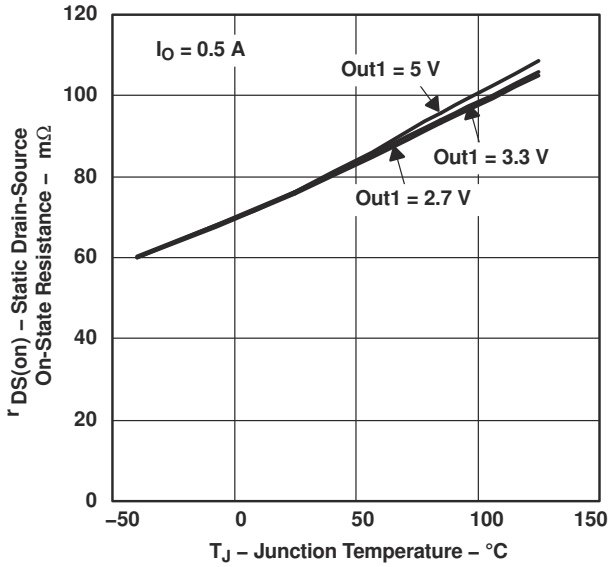

图 6-25. STATIC DRAIN-SOURCE ON-STATE RESISTANCE vs JUNCTION TEMPERATURE

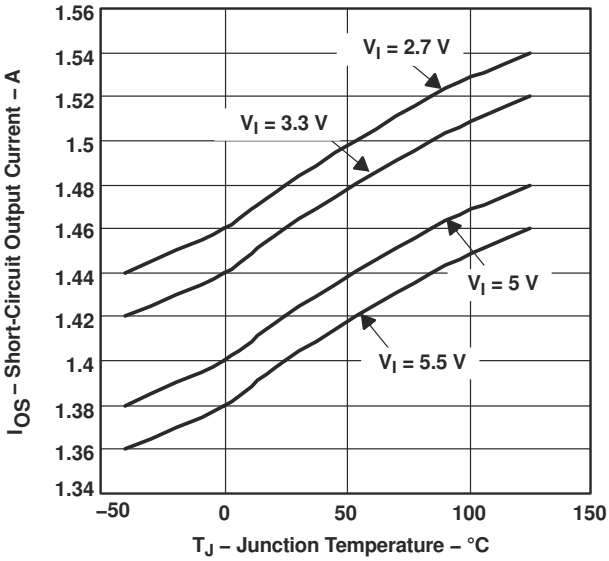

图 6-26. SHORT-CIRCUIT OUTPUT CURRENT vsJUNCTION TEMPERATURE

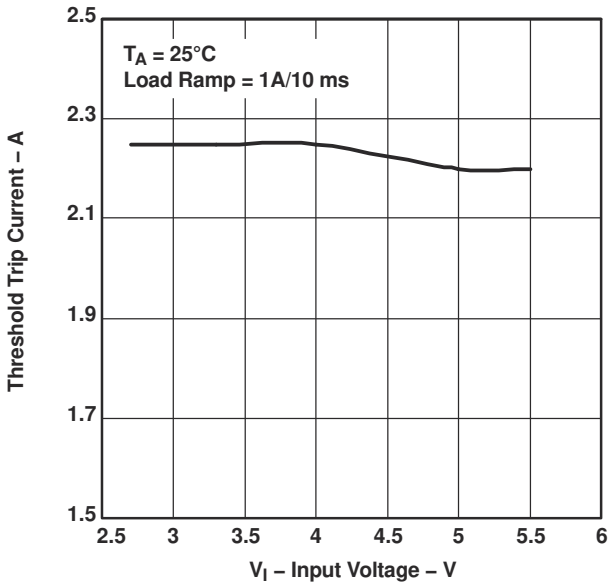

图 6-27. THRESHOLD TRIP CURRENT vs INPUT VOLTAGE

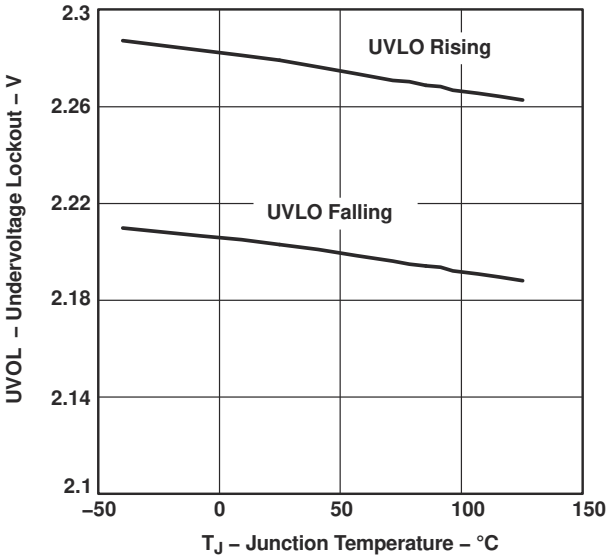

图 6-28. UNDERVOLTAGE LOCKOUT vs JUNCTION TEMPERATURE

Copyright © 2024 Texas Instruments Incorporated

6.6 Typical Characteristics (TPS2063 & TPS2067) (continued)

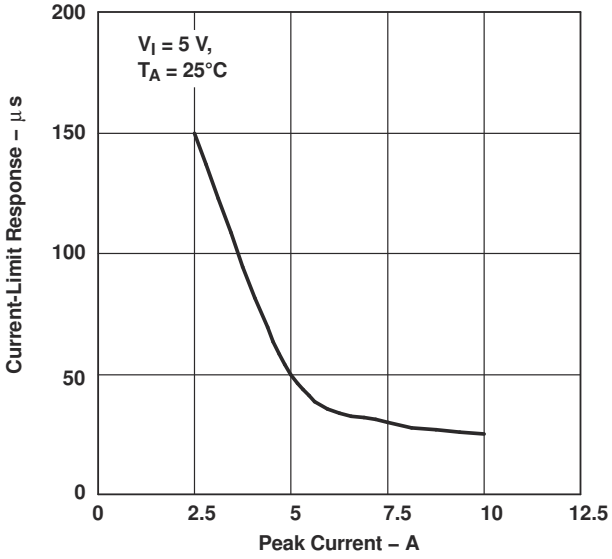

图 6-29. CURRENT-LIMIT RESPONSE vs PEAK CURRENT

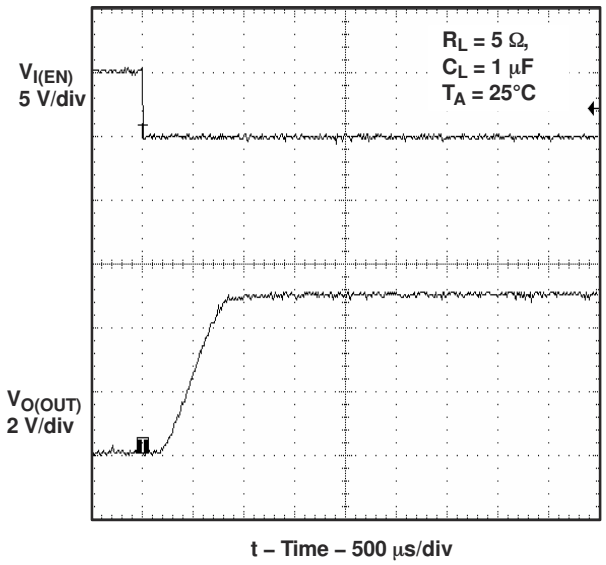

图 6-30. Turnon Delay and Rise Time With 1- µ F Load

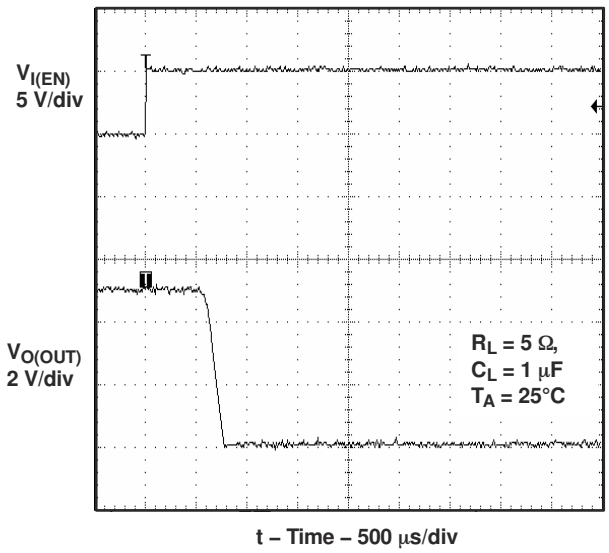

图 6-31. Turnoff Delay and Fall Time With 1- µ F Load

Copyright © 2024 Texas Instruments Incorporated

6.6 Typical Characteristics (TPS2063 & TPS2067) (continued)

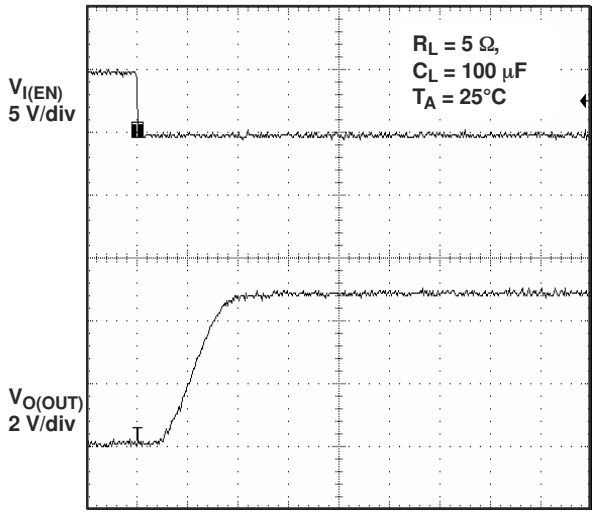

图 6-32. Turnon Delay and Rise Time With 100- µ F Load

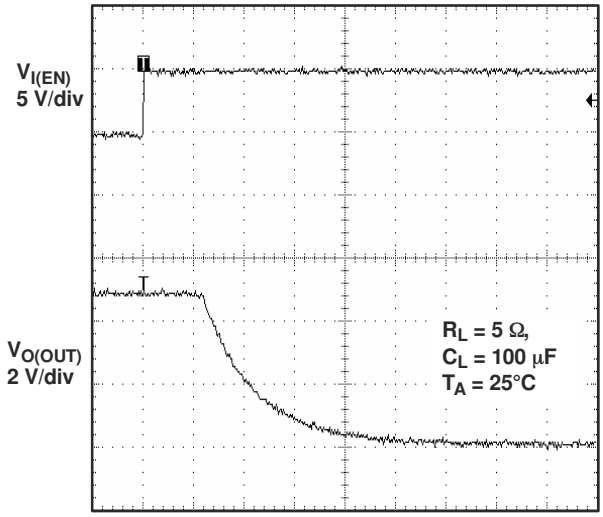

图 6-33. Turnoff Delay and Fall Time With 100- µ F Load

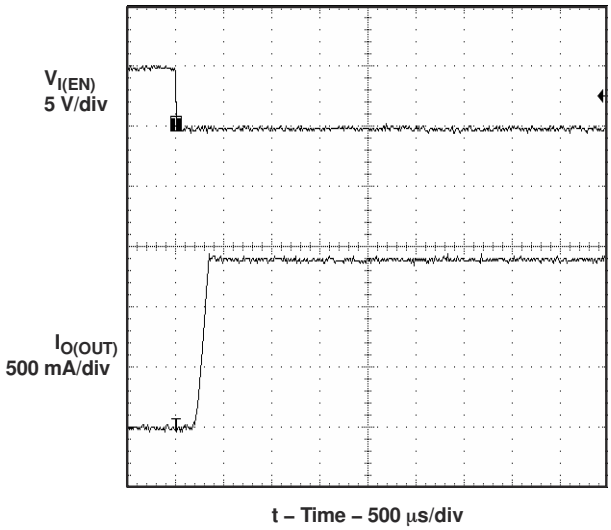

图 6-34. Short-Circuit Current, Device Enabled Into Short

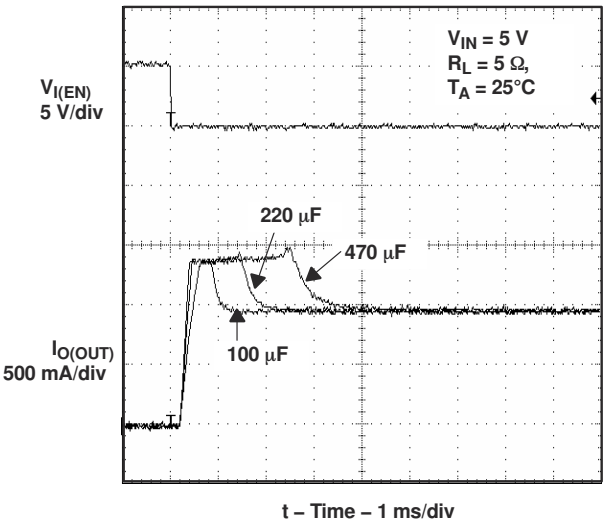

图 6-35. Inrush Current With Different Load Capacitance

Copyright © 2024 Texas Instruments Incorporated

6.6 Typical Characteristics (TPS2063 & TPS2067) (continued)

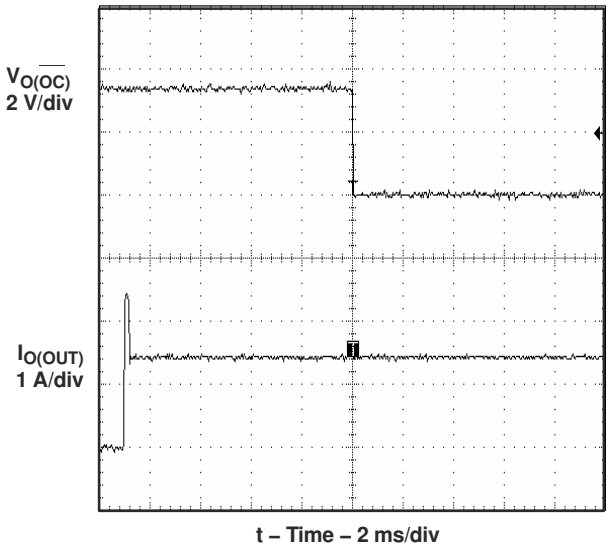

图 6-36. 2-Ω Load Connected to Enabled Device

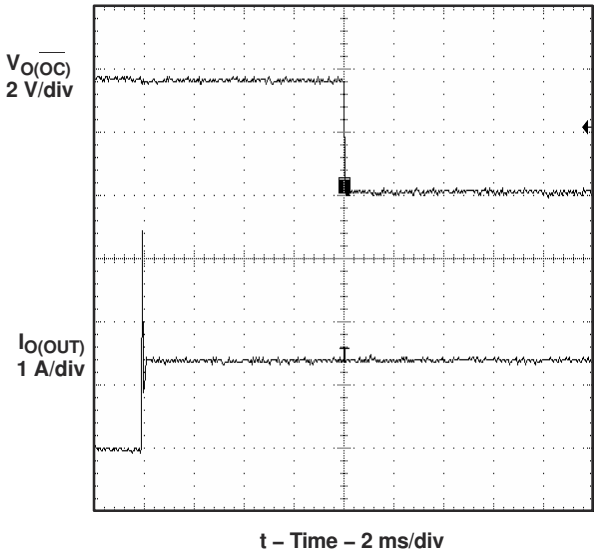

图 6-37. 1-Ω Load Connected to Enabled Device

Copyright © 2024 Texas Instruments Incorporated

7 Parameter Measurement Information

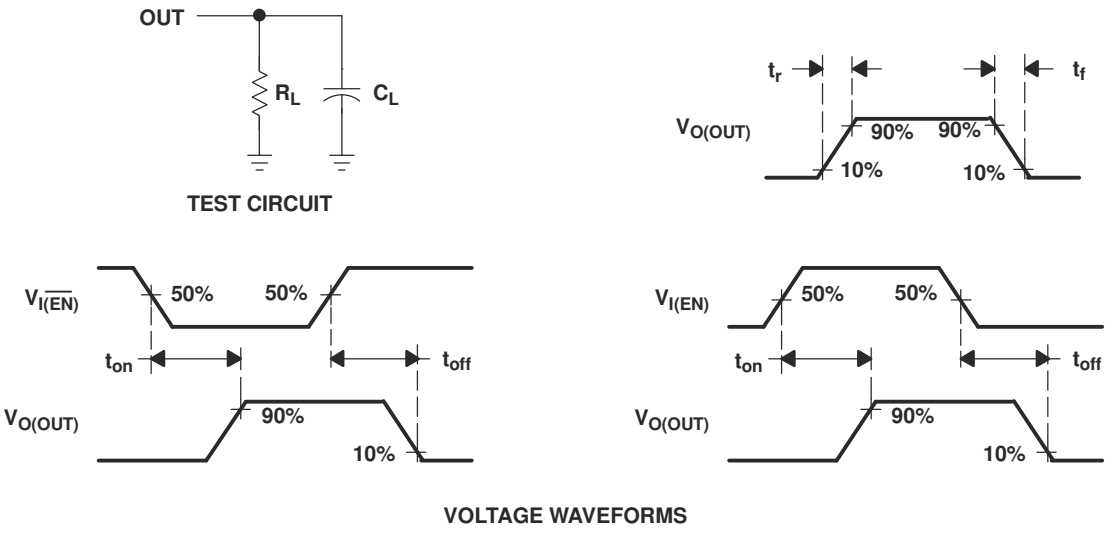

图 7-1. Test Circuit and Voltage Waveforms

8 Detailed Description

8.1 Functional Block Diagram

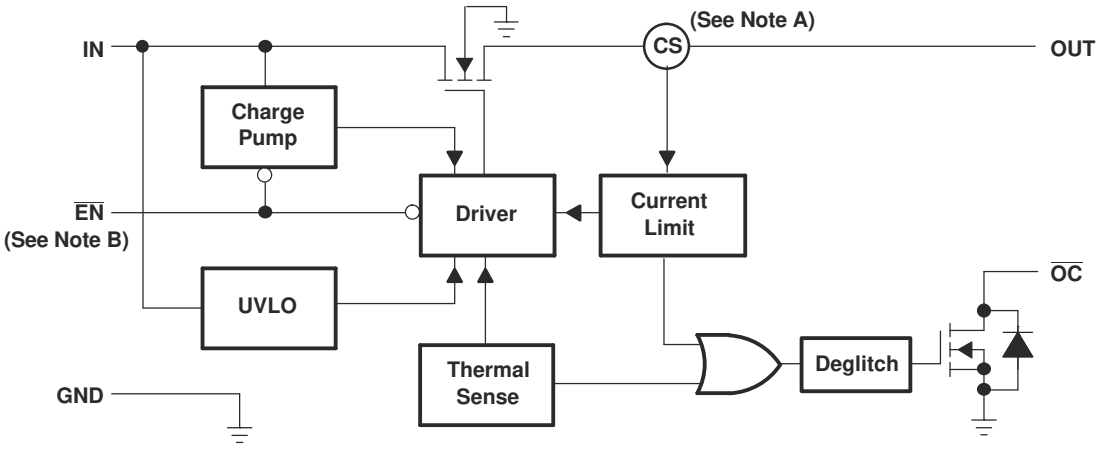

Note A: Current sense
Note B: Active low ($\overline{EN}$) for TPS2061. Active high (EN) for TPS2065.

图 8-1. TPS2061 and TPS2065

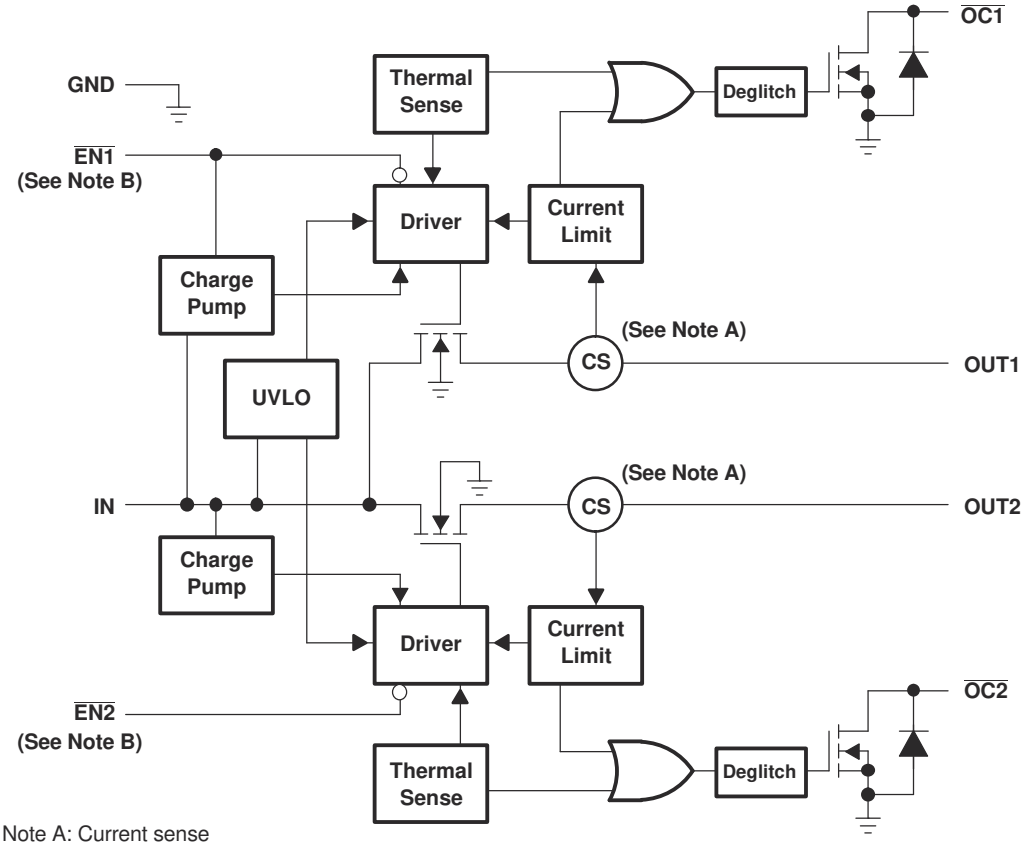

Note A: Current sense
Note B: Active low ($\overline{ENx}$) for TPS2062. Active high (ENx) for TPS2066.

图 8-2. TPS2062 and TPS2066

Copyright © 2024 Texas Instruments Incorporated

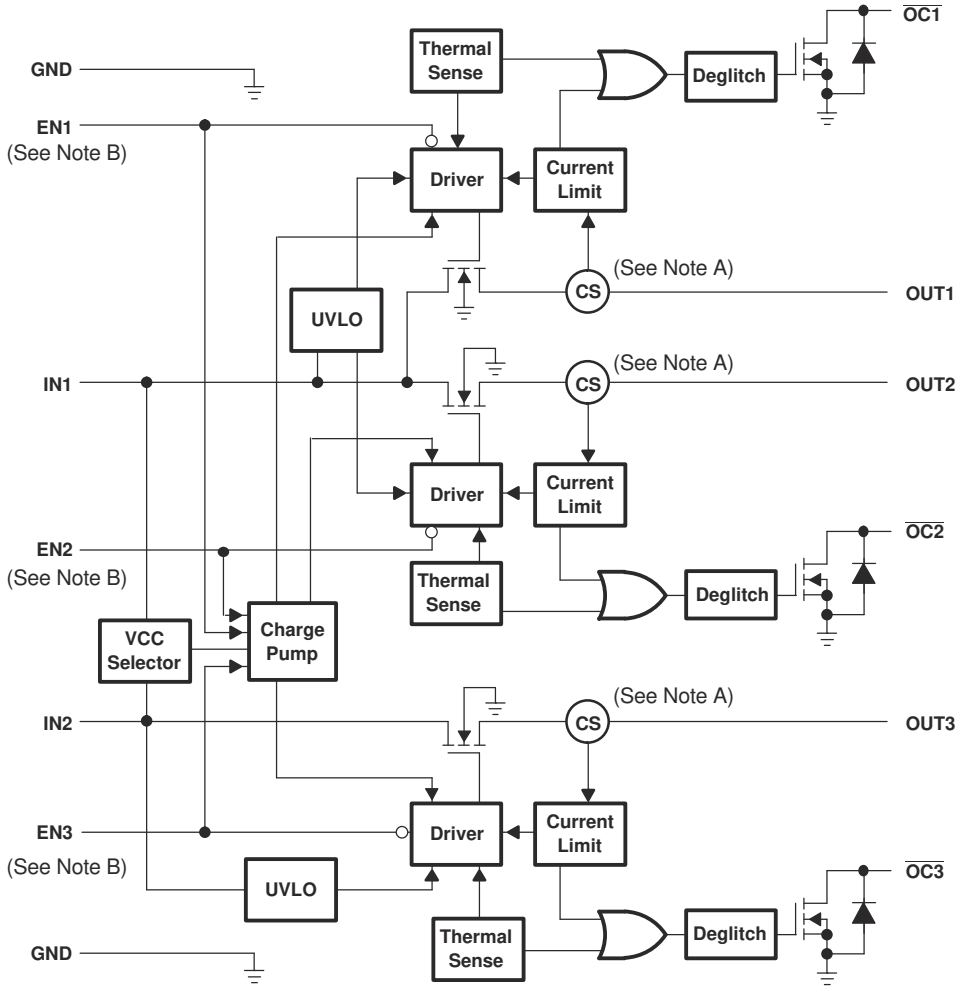

Note A: Current sense

Note B: Active low ($\overline{ENx}$) for TPS2063; Active high (ENx) for TPS2067

图 8-3. TPS2063 and TPS2067

8.2 Power Switch

The power switch is an N-channel MOSFET with a low on-state resistance. Configured as a high-side switch, the power switch prevents current flow from OUT to IN and IN to OUT when disabled. The power switch supplies a minimum current of 1 A.

8.3 Charge Pump

An internal charge pump supplies power to the driver circuit and provides the necessary voltage to pull the gate of the MOSFET above the source. The charge pump operates from input voltages as low as 2.7 V and requires little supply current.

8.4 Driver

The driver controls the gate voltage of the power switch. To limit large current surges and reduce the associated electromagnetic interference (EMI) produced, the driver incorporates circuitry that controls the rise times and fall times of the output voltage.

Copyright © 2024 Texas Instruments Incorporated

8.5 Enable ($\overline{\text{ENx}}$ or ENx)

The logic enable disables the power switch and the bias for the charge pump, driver, and other circuitry to reduce the supply current. The supply current is reduced to less than 1 μA when a logic high is present on $\overline{\text{ENx}}$, or when a logic low is present on ENx. A logic zero input on $\overline{\text{ENx}}$, or a logic high input on ENx restores bias to the drive and control circuits and turns the switch on. The enable input is compatible with both TTL and CMOS logic levels.

8.6 Current Sense

A sense FET monitors the current supplied to the load. The sense FET measures current more efficiently than conventional resistance methods. When an overload or short circuit is encountered, the current-sense circuitry sends a control signal to the driver. The driver in turn reduces the gate voltage and drives the power FET into its saturation region, which switches the output into a constant-current mode and holds the current constant while varying the voltage on the load.

8.7 Overcurrent

A sense FET is employed to check for overcurrent conditions. Unlike current-sense resistors, sense FETs do not increase the series resistance of the current path. When an overcurrent condition is detected, the device maintains a constant output current and reduces the output voltage accordingly. Complete shutdown occurs only if the fault is present long enough to activate thermal limiting.

There are two kinds of current limit profiles for the TPS20xx family of devices.

The TPS2063 and TPS2067 have an output I vs V characteristic similar to the plot labeled **Current Limit with Peaking** in 图 8-4. This type of limiting can be characterized by two parameters, the overcurrent trip threshold (I_{OC}), and the short-circuit output current threshold (I_{OS}).

The TPS2061, TPS2062, TPS2065, and TPS2066 have an output I vs V characteristic similar to the plot labeled **Flat Current Limit** in 图 8-4. This type of limiting can be characterized by one parameters, the short circuit current (I_{OS}).

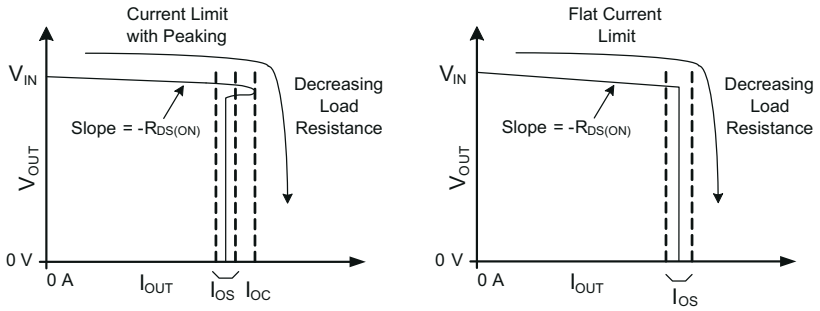

图 8-4. Current Limit Profiles

8.7.1 Overcurrent Conditions (TPS2063 and TPS2067)

Three possible overload conditions can occur for the TPS2063 and TPS2067. In the first condition, the output has been shorted before the device is enabled or before $V_{I(IN)}$ has been applied (see 图 6-34 through 图 6-36). The TPS2063 and TPS2067 senses the short and immediately switches into a constant-current output.

In the second condition, a short or an overload occurs while the device is enabled. At the instant the overload occurs, high currents may flow for a short period of time before the current-limit circuit can react. After the current-limit circuit has tripped (reached the overcurrent trip threshold (I_{OC})), the device switches into constant-current mode and current is limited at the short-circuit output current threshold (I_{OS}).

In the third condition, the load has been gradually increased beyond the recommended operating current. The current is permitted to rise until the overcurrent trip threshold (I_{OC}) is reached or until the thermal limit of the device is exceeded. The TPS2063 and TPS2067 are capable of delivering current up to the current-limit

Copyright © 2024 Texas Instruments Incorporated

threshold without damaging the device. Once the overcurrent trip threshold (I_{OC}) has been reached, the device switches into its constant-current mode current is limited at the short-circuit output current threshold (I_{OS}).

8.7.2 Overcurrent Conditions (TPS2061, TPS2062, TPS2065, and TPS2066)

Three possible overload conditions can occur for the TPS2061, TPS2062, TPS2065 and TPS2066. In the first condition, the output has been shorted before the device is enabled or before $V_{I(IN)}$ has been applied (see 图 6-15 through 图 6-18). The TPS20xx senses the short and immediately switches into a constant-current output.

In the second condition, a short or an overload occurs while the device is enabled. At the instant the overload occurs, high currents may flow for a short period of time before the current-limit circuit can react. After the short-circuit output current threshold (I_{OS}) is reached, the device switches into constant-current mode.

In the third condition, the load has been gradually increased beyond the recommended operating current. After the short-circuit output current threshold (I_{OS}) is reached, the device switches into constant-current mode.

8.8 Overcurrent ($\overline{OCx}$)

The $\overline{OCx}$ open-drain output is asserted (active low) when an overcurrent or overtemperature condition is encountered. The output remains asserted until the overcurrent or overtemperature condition is removed. A 10-ms deglitch circuit prevents the $\overline{OCx}$ signal from oscillation or false triggering. If an overtemperature shutdown occurs, the $\overline{OCx}$ is asserted instantaneously.

8.9 Thermal Sense

The TPS206x implements a thermal sensing to monitor the operating temperature of the power distribution switch. In an overcurrent or short-circuit condition the junction temperature rises. When the die temperature rises to approximately 140°C due to overcurrent conditions, the internal thermal sense circuitry turns off the switch, thus preventing the device from damage. Hysteresis is built into the thermal sense, and after the device has cooled approximately 10 degrees, the switch turns back on. The switch continues to cycle off and on until the fault is removed. The open-drain false reporting output ($\overline{OCx}$) is asserted (active low) when an overtemperature shutdown or overcurrent occurs.

8.10 Undervoltage Lockout

A voltage sense circuit monitors the input voltage. When the input voltage is below approximately 2 V, a control signal turns off the power switch.

Copyright © 2024 Texas Instruments Incorporated

9 Application and Implementation

备注

以下应用部分中的信息不属于 TI 器件规格的范围，TI 不担保其准确性和完整性。TI 的客 户应负责确定器件是否适用于其应用。客户应验证并测试其设计，以确保系统功能。

9.1 Application Information

9.1.1 Power-supply Considerations

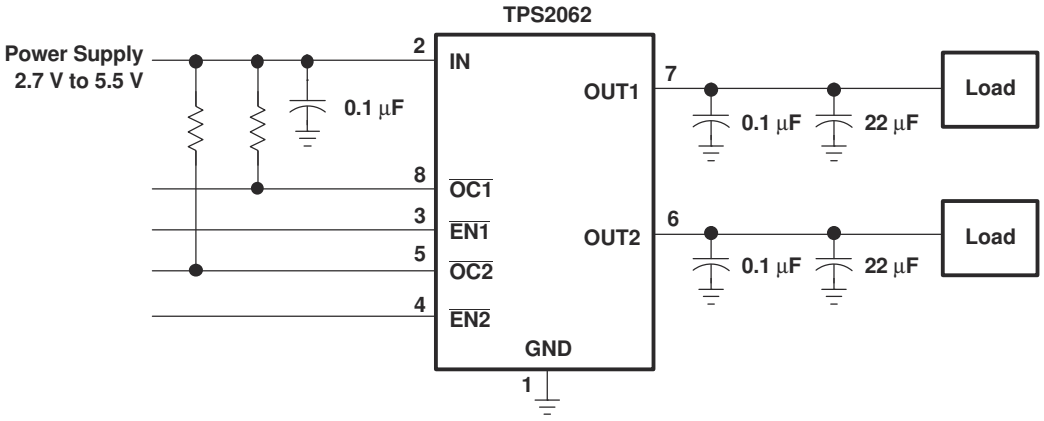

图 9-1. Typical Application

A 0.01-µF to 0.1-µF ceramic bypass capacitor between IN and GND, close to the device, is recommended. Placing a high-value electrolytic capacitor on the output pin(s) is recommended when the output load is heavy. This precaution reduces power-supply transients that may cause ringing on the input. Additionally, bypassing the output with a 0.01-µF to 0.1-µF ceramic capacitor improves the immunity of the device to short-circuit transients.

9.1.2 $\overline{OC}$ Response

The $\overline{OCx}$ open-drain output is asserted (active low) when an overcurrent or overtemperature shutdown condition is encountered after a 10-ms deglitch timeout. The output remains asserted until the overcurrent or overtemperature condition is removed. Connecting a heavy capacitive load to an enabled device can cause a momentary overcurrent condition; however, no false reporting on $\overline{OCx}$ occurs due to the 10-ms deglitch circuit. The TPS206x is designed to eliminate false overcurrent reporting. The internal overcurrent deglitch eliminates the need for external components to remove unwanted pulses. $\overline{OCx}$ is not deglitched when the switch is turned off due to an overtemperature shutdown.

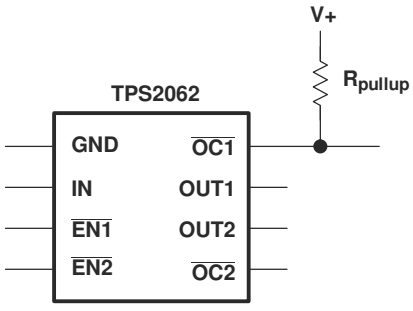

图 9-2. Typical Circuit for the $\overline{OC}$ Pin

Copyright © 2024 Texas Instruments Incorporated

9.1.3 Power Dissipation and Junction Temperature

The low on-resistance on the N-channel MOSFET allows the small surface-mount packages to pass large currents. The thermal resistances of these packages are high compared to those of power packages; it is good design practice to check power dissipation and junction temperature. Begin by determining the $r_{DS(on)}$ of the N-channel MOSFET relative to the input voltage and operating temperature. As an initial estimate, use the highest operating ambient temperature of interest and read $r_{DS(on)}$ from 图 6-25. Using this value, the power dissipation per switch can be calculated by:

- $P_D = r_{DS(on)} \times I^2$

Multiply this number by the number of switches being used. This step renders the total power dissipation from the N-channel MOSFETs.

The thermal resistance, $R_{\theta JA}$ = 1 / (DERATING FACTOR), where DERATING FACTOR is obtained from the Dissipation Ratings Table. Thermal resistance is a strong function of the printed circuit board construction , and the copper trace area connecting the integrated circuit.

Finally, calculate the junction temperature:

- $T_J = P_D \times R_{\theta JA} + T_A$

Where:

- T_A= Ambient temperature °C
- $R_{\theta JA}$ = Thermal resistance
- P_D = Total power dissipation based on number of switches being used.

Compare the calculated junction temperature with the initial estimate. If they do not agree within a few degrees, repeat the calculation, using the calculated value as the new estimate. Two or three iterations are generally sufficient to get a reasonable answer.

9.1.4 Thermal Protection

Thermal protection prevents damage to the IC when heavy-overload or short-circuit faults are present for extended periods of time. The TPS206x implements a thermal sensing to monitor the operating junction temperature of the power distribution switch. In an overcurrent or short-circuit condition, the junction temperature rises due to excessive power dissipation. Once the die temperature rises above a minimum of 135°C due to overcurrent conditions, the internal thermal sense circuitry turns the power switch off, thus preventing the power switch from damage. Hysteresis is built into the thermal sense circuit, and after the device has cooled approximately 10°C, the switch turns back on. The switch continues to cycle in this manner until the load fault or input power is removed. The $\overline{OCx}$ open-drain output is asserted (active low) when an overtemperature shutdown or overcurrent occurs.

9.1.5 Undervoltage Lockout (UVLO)

An undervoltage lockout ensures that the power switch is in the off state at power up. Whenever the input voltage falls below approximately 2 V, the power switch is quickly turned off. The UVLO facilitates the design of hot-insertion systems where it is not possible to turn off the power switch before input power is removed. The UVLO also keeps the switch from being turned on until the power supply has reached at least 2 V, even if the switch is enabled. On reinsertion, the power switch is turned on, with a controlled rise time to reduce EMI and voltage overshoots.

9.1.6 Universal Serial Bus (USB) Applications

The universal serial bus (USB) interface is a 12-Mb/s, or 1.5-Mb/s, multiplexed serial bus designed for low-to-medium bandwidth PC peripherals (for example, keyboards, printers, scanners, and mice). The four-wire USB interface is conceived for dynamic attach-detach (hot plug-unplug) of peripherals. Two lines are provided for differential data, and two lines are provided for 5-V power distribution.

Copyright © 2024 Texas Instruments Incorporated

USB data is a 3.3-V level signal, but power is distributed at 5 V to allow for voltage drops in cases where power is distributed through more than one hub across long cables. Each function must provide its own regulated 3.3 V from the 5-V input or its own internal power supply.

The USB specification defines the following five classes of devices, each differentiated by power-consumption requirements:

- Hosts/self-powered hubs (SPH)
- Bus-powered hubs (BPH)
- Low-power, bus-powered functions
- High-power, bus-powered functions
- Self-powered functions

SPHs and BPHs distribute data and power to downstream functions. The TPS206x has higher current capability than required by one USB port; so, it can be used on the host side and supplies power to multiple downstream ports or functions.

9.1.7 Host/Self-Powered and Bus-powered Hubs

Hosts and SPHs have a local power supply that powers the embedded functions and the downstream ports (see 图 9-3). This power supply must provide from 5.25 V to 4.75 V to the board side of the downstream connection under full-load and no-load conditions. Hosts and SPHs are required to have current-limit protection and must report overcurrent conditions to the USB controller. Typical SPHs are desktop PCs, monitors, printers, and stand-alone hubs.

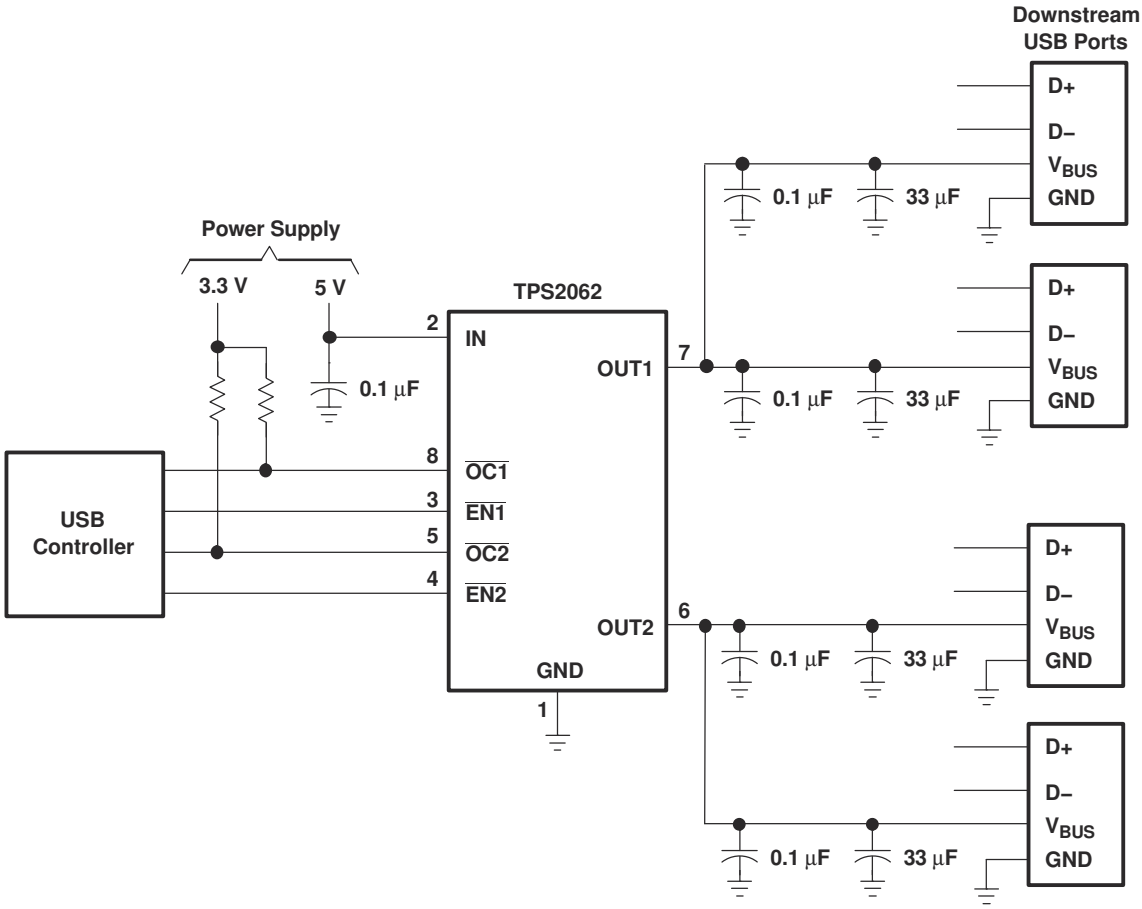

图 9-3. Typical Four-Port USB Host / Self-Powered Hub

Copyright © 2024 Texas Instruments Incorporated

BPHs obtain all power from upstream ports and often contain an embedded function. The hubs are required to power up with less than one unit load. The BPH usually has one embedded function, and power is always available to the controller of the hub. If the embedded function and hub require more than 100 mA on power up, the power to the embedded function may need to be kept off until enumeration is completed. This can be accomplished by removing power or by shutting off the clock to the embedded function. Power switching the embedded function is not necessary if the aggregate power draw for the function and controller is less than one unit load. The total current drawn by the bus-powered device is the sum of the current to the controller, the embedded function, and the downstream ports, and it is limited to 500 mA from an upstream port.

9.1.8 Low-power Bus-powered and High-Power Bus-Powered Functions

Both low-power and high-power bus-powered functions obtain all power from upstream ports; low-power functions always draw less than 100 mA; high-power functions must draw less than 100 mA at power up and can draw up to 500 mA after enumeration. If the load of the function is more than the parallel combination of 44 Ω and 10 µF at power up, the device must implement inrush current limiting (see 图 9-4). With TPS206x, the internal functions can draw more than 500 mA, which fits the needs of some applications such as motor driving circuits.

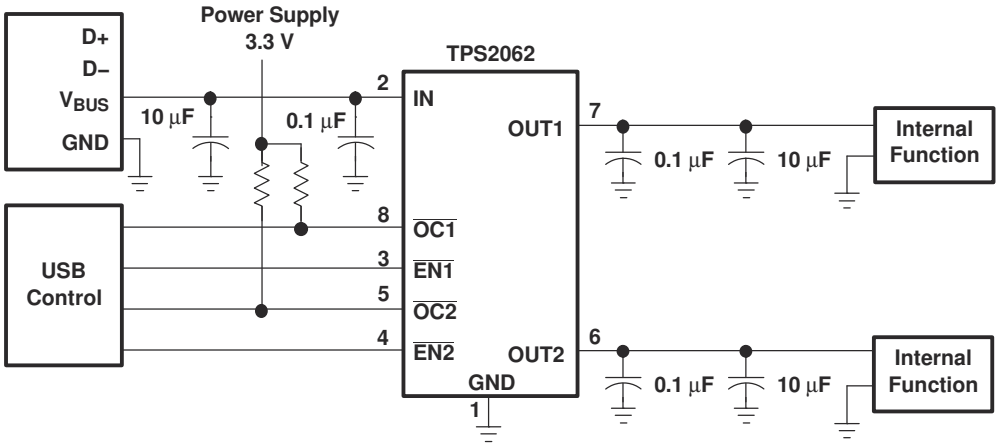

图 9-4. High-Power Bus-Powered Function

9.1.9 USB Power-distribution Requirements

USB can be implemented in several ways, and, regardless of the type of USB device being developed, several power-distribution features must be implemented.

- Hosts/SPHs must:
  - Current-limit downstream ports
  - Report overcurrent conditions on USB V_{BUS}
- BPHs must:
  - Enable/disable power to downstream ports
  - Power up at <100 mA
  - Limit inrush current (<44 Ω and 10 µF)
- Functions must:
  - Limit inrush currents
  - Power up at <100 mA

The feature set of the TPS206x allows them to meet each of these requirements. The integrated current-limiting and overcurrent reporting is required by hosts and self-powered hubs. The logic-level enable and controlled rise times meet the need of both input and output ports on bus-powered hubs, as well as the input ports for bus-powered functions (see 图 9-5).

Copyright © 2024 Texas Instruments Incorporated

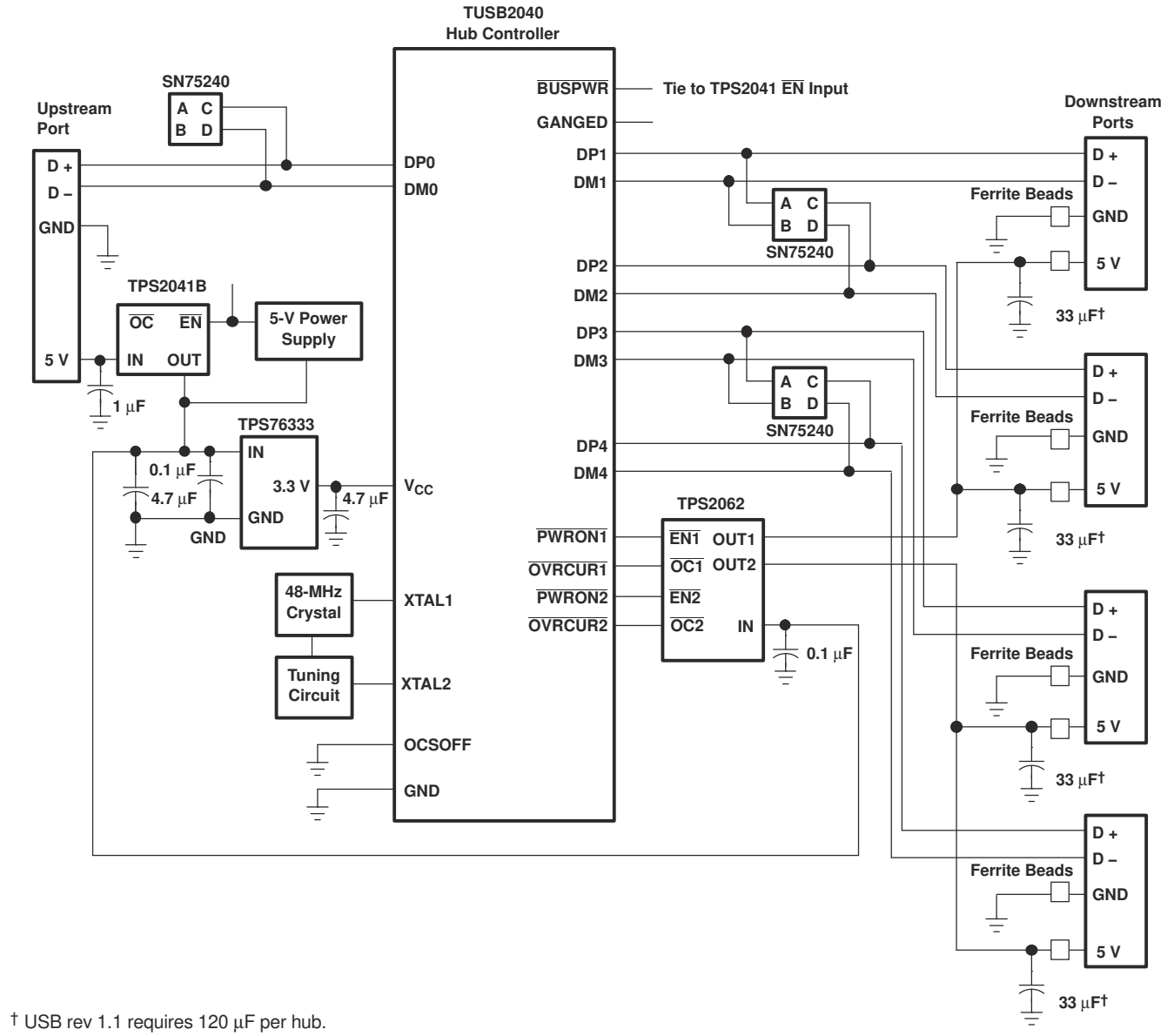

† USB rev 1.1 requires 120 µF per hub.

图 9-5. Hybrid Self / Bus-Powered Hub Implementation

9.1.10 Generic Hot-Plug Applications

In many applications it may be necessary to remove modules or pc boards while the main unit is still operating. These are considered hot-plug applications. Such implementations require the control of current surges seen by the main power supply and the card being inserted. The most effective way to control these surges is to limit and slowly ramp the current and voltage being applied to the card, similar to the way in which a power supply normally turns on. Due to the controlled rise times and fall times of the TPS206x, these devices can be used to provide a softer start-up to devices being hot-plugged into a powered system. The UVLO feature of the TPS206x also ensures that the switch is off after the card has been removed, and that the switch is off during the next insertion. The UVLO feature insures a soft start with a controlled rise time for every insertion of the card or module.

Copyright © 2024 Texas Instruments Incorporated

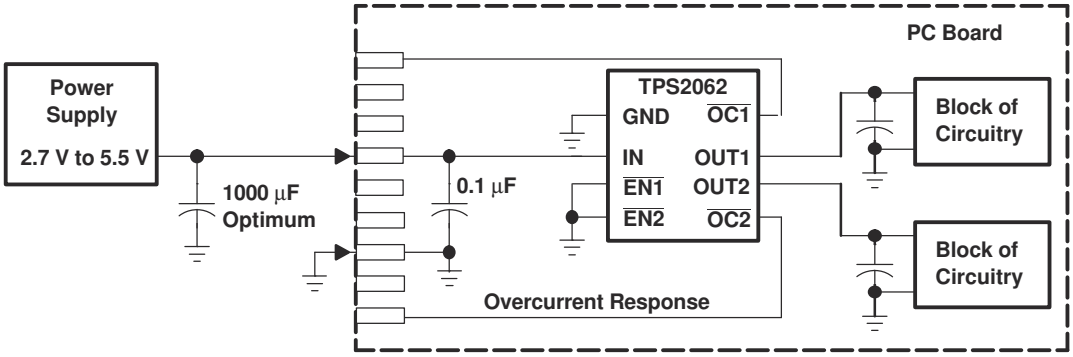

图 9-6. Typical Hot-Plug Implementation

By placing the TPS206x between the V_{CC} input and the rest of the circuitry, the input power reaches these devices first after insertion. The typical rise time of the switch is approximately 1 ms, providing a slow voltage ramp at the output of the device. This implementation controls system surge currents and provides a hot-plugging mechanism for any device.

Copyright © 2024 Texas Instruments Incorporated

10 Device and Documentation Support

TI offers an extensive line of development tools. Tools and software to evaluate the performance of the device, generate code, and develop solutions are listed below.

10.1 Device Support

10.2 Documentation Support

10.3 接收文档更新通知

要接收文档更新通知，请导航至 ti.com 上的器件产品文件夹。点击*通知* 进行注册，即可每周接收产品信息更改摘要。有关更改的详细信息，请查看任何已修订文档中包含的修订历史记录。

10.4 支持资源

TI E2E™ 中文支持论坛是工程师的重要参考资料，可直接从专家处获得快速、经过验证的解答和设计帮助。搜索现有解答或提出自己的问题，获得所需的快速设计帮助。

链接的内容由各个贡献者“按原样”提供。这些内容并不构成 TI 技术规范，并且不一定反映 TI 的观点；请参阅 TI 的使用条款。

10.5 Trademarks

PowerPAD™ and TI E2E™ are trademarks of Texas Instruments.
所有商标均为其各自所有者的财产。

10.6 静电放电警告



静电放电 (ESD) 会损坏这个集成电路。德州仪器 (TI) 建议通过适当的预防措施处理所有集成电路。如果不遵守正确的处理和安装程序，可能会损坏集成电路。

ESD 的损坏小至导致微小的性能降级，大至整个器件故障。精密的集成电路可能更容易受到损坏，这是因为非常细微的参数更改都可能会导致器件与其发布的规格不相符。

10.7 术语表

TI 术语表　　本术语表列出并解释了术语、首字母缩略词和定义。

11 Revision History

注：以前版本的页码可能与当前版本的页码不同

Changes from Revision J (August 2023) to Revision K (June 2024)	Page
• 删除了“功耗额定值”表	1
• Added 节 6.3	6
• Updated TPS2061, TPS2062, TPS2065, TPS2066 electrical characteristics, including overcurrent trip threshold, high-level output supply current and undervoltage lockout	6
• Updated TPS2061, TPS2062, TPS2065, TPS2066 Typical Characteristics	8
• Updated TPS2061, TPS2062, TPS2065, TPS2066 overcurrent description	20
• Updated 节 8.7.1	20
• Updated 节 8.7.2	21

Changes from Revision I (October 2009) to Revision J (August 2023)	Page
• 通篇更新了表格、图和交叉参考的编号格式	1
• Added $r_{DS(on)}$ for DBV package	6

Copyright © 2024 Texas Instruments Incorporated

- Updated TPS2065DBV electrical characteristics, including overcurrent trip threshold, high-level output supply current and undervoltage lockout..... 6
- Updated TPS2065DBV Typical Characteristics..... 8
- Moved overcurrent description from Application and Implementation section to Detailed Description section..... 20
- Added TPS2065DBV overcurrent description..... 20

Copyright © 2024 Texas Instruments Incorporated

12 Mechanical, Packaging, and Orderable Information

The following pages include mechanical, packaging, and orderable information. This information is the most current data available for the designated devices. This data is subject to change without notice and revision of this document. For browser-based versions of this data sheet, refer to the left-hand navigation.

Copyright © 2024 Texas Instruments Incorporated

PACKAGING INFORMATION

Orderable part number	Status (1)	Material type (2)	Package | Pins	Package qty | Carrier	RoHS (3)	Lead finish/ Ball material (4)	MSL rating/ Peak reflow (5)	Op temp (°C)	Part marking (6)
TPS2061DBVR	Active	Production	SOT-23 (DBV) | 5	3000 | LARGE T&R	Yes	NIPDAU | SN	Level-1-260C-UNLIM	-40 to 125	2061
TPS2061DBVR.A	Active	Production	SOT-23 (DBV) | 5	3000 | LARGE T&R	Yes	SN	Level-1-260C-UNLIM	0 to 125	2061
TPS2061DBVRG4	Active	Production	SOT-23 (DBV) | 5	3000 | LARGE T&R	Yes	NIPDAU	Level-1-260C-UNLIM	-40 to 125	2061
TPS2061DBVRG4.A	Active	Production	SOT-23 (DBV) | 5	3000 | LARGE T&R	Yes	NIPDAU	Level-1-260C-UNLIM	-40 to 125	2061
TPS2061DGNR	Active	Production	HVSSOP (DGN) | 8	2500 | LARGE T&R	Yes	NIPDAU | NIPDAUAG	Level-1-260C-UNLIM	-40 to 125	2061
TPS2061DGNR.A	Active	Production	HVSSOP (DGN) | 8	2500 | LARGE T&R	Yes	NIPDAU	Level-1-260C-UNLIM	-40 to 125	2061
TPS2061DGNRG4	Active	Production	HVSSOP (DGN) | 8	2500 | LARGE T&R	Yes	NIPDAU	Level-1-260C-UNLIM	-40 to 125	2061
TPS2061DR	Active	Production	SOIC (D) | 8	2500 | LARGE T&R	Yes	NIPDAU	Level-1-260C-UNLIM	-40 to 125	2061
TPS2061DR.A	Active	Production	SOIC (D) | 8	2500 | LARGE T&R	Yes	NIPDAU	Level-1-260C-UNLIM	-40 to 125	2061
TPS2062DGNR	Active	Production	HVSSOP (DGN) | 8	2500 | LARGE T&R	Yes	NIPDAU | NIPDAUAG	Level-1-260C-UNLIM	-40 to 125	2062
TPS2062DGNR.A	Active	Production	HVSSOP (DGN) | 8	2500 | LARGE T&R	Yes	NIPDAU	Level-1-260C-UNLIM	-40 to 125	2062
TPS2062DR	Active	Production	SOIC (D) | 8	2500 | LARGE T&R	Yes	NIPDAU	Level-1-260C-UNLIM	-40 to 125	2062
TPS2062DR.A	Active	Production	SOIC (D) | 8	2500 | LARGE T&R	Yes	NIPDAU	Level-1-260C-UNLIM	-40 to 125	2062
TPS2062DRG4	Active	Production	SOIC (D) | 8	2500 | LARGE T&R	Yes	NIPDAU	Level-1-260C-UNLIM	-40 to 125	2062
TPS2063D	Active	Production	SOIC (D) | 16	40 | TUBE	Yes	NIPDAU	Level-1-260C-UNLIM	-40 to 125	2063
TPS2063D.A	Active	Production	SOIC (D) | 16	40 | TUBE	Yes	NIPDAU	Level-1-260C-UNLIM	-40 to 125	2063
TPS2063DR	Active	Production	SOIC (D) | 16	2500 | LARGE T&R	Yes	NIPDAU	Level-1-260C-UNLIM	-40 to 125	2063
TPS2063DR.A	Active	Production	SOIC (D) | 16	2500 | LARGE T&R	Yes	NIPDAU	Level-1-260C-UNLIM	-40 to 125	2063
TPS2063DRG4	Active	Production	SOIC (D) | 16	2500 | LARGE T&R	Yes	NIPDAU	Level-1-260C-UNLIM	-40 to 125	2063
TPS2065DBVR	Active	Production	SOT-23 (DBV) | 5	3000 | LARGE T&R	Yes	NIPDAU | SN	Level-1-260C-UNLIM	-40 to 125	2065
TPS2065DBVR.A	Active	Production	SOT-23 (DBV) | 5	3000 | LARGE T&R	Yes	NIPDAU	Level-1-260C-UNLIM	-40 to 125	2065
TPS2065DBVR1G4.A	Active	Production	SOT-23 (DBV) | 5	3000 | LARGE T&R	-	Call TI	Call TI	-40 to 125	2065
TPS2065DBVT	Obsolete	Production	SOT-23 (DBV) | 5	-	-	Call TI	Call TI	-40 to 125	2065
TPS2065DGNR	Active	Production	HVSSOP (DGN) | 8	2500 | LARGE T&R	Yes	NIPDAU | NIPDAUAG	Level-1-260C-UNLIM	-40 to 125	2065
TPS2065DGNR.A	Active	Production	HVSSOP (DGN) | 8	2500 | LARGE T&R	Yes	NIPDAU	Level-1-260C-UNLIM	-40 to 125	2065
TPS2065DR	Active	Production	SOIC (D) | 8	2500 | LARGE T&R	Yes	NIPDAU	Level-1-260C-UNLIM	-40 to 125	2065
TPS2065DR.A	Active	Production	SOIC (D) | 8	2500 | LARGE T&R	Yes	NIPDAU	Level-1-260C-UNLIM	-40 to 125	2065
TPS2065DRG4	Active	Production	SOIC (D) | 8	2500 | LARGE T&R	Yes	NIPDAU	Level-1-260C-UNLIM	-40 to 125	2065
TPS2065DRG4.A	Active	Production	SOIC (D) | 8	2500 | LARGE T&R	Yes	NIPDAU	Level-1-260C-UNLIM	-40 to 125	2065

Orderable part number	Status (1)	Material type (2)	Package | Pins	Package qty | Carrier	RoHS (3)	Lead finish/ Ball material (4)	MSL rating/ Peak reflow (5)	Op temp (°C)	Part marking (6)
TPS2066DGNR	Active	Production	HVSSOP (DGN) | 8	2500 | LARGE T&R	Yes	NIPDAU | NIPDAUAG	Level-1-260C-UNLIM	-40 to 125	2066
TPS2066DGNR.A	Active	Production	HVSSOP (DGN) | 8	2500 | LARGE T&R	Yes	NIPDAU	Level-1-260C-UNLIM	-40 to 125	2066
TPS2066DGNRG4	Active	Production	HVSSOP (DGN) | 8	2500 | LARGE T&R	Yes	NIPDAU	Level-1-260C-UNLIM	-40 to 125	2066
TPS2066DR	Active	Production	SOIC (D) | 8	2500 | LARGE T&R	Yes	NIPDAU	Level-1-260C-UNLIM	-40 to 125	2066
TPS2066DR.A	Active	Production	SOIC (D) | 8	2500 | LARGE T&R	Yes	NIPDAU	Level-1-260C-UNLIM	-40 to 125	2066
TPS2066DRG4	Active	Production	SOIC (D) | 8	2500 | LARGE T&R	Yes	NIPDAU	Level-1-260C-UNLIM	-40 to 125	2066
TPS2067D	Active	Production	SOIC (D) | 16	40 | TUBE	Yes	NIPDAU	Level-1-260C-UNLIM	-40 to 125	2067
TPS2067D.A	Active	Production	SOIC (D) | 16	40 | TUBE	Yes	NIPDAU	Level-1-260C-UNLIM	-40 to 125	2067
TPS2067DR	Active	Production	SOIC (D) | 16	2500 | LARGE T&R	Yes	NIPDAU	Level-1-260C-UNLIM	-40 to 125	2067
TPS2067DR.A	Active	Production	SOIC (D) | 16	2500 | LARGE T&R	Yes	NIPDAU	Level-1-260C-UNLIM	-40 to 125	2067
TPS2067DRG4	Active	Production	SOIC (D) | 16	2500 | LARGE T&R	Yes	NIPDAU	Level-1-260C-UNLIM	-40 to 125	2067

(1) **Status:** For more details on status, see our product life cycle.

(2) **Material type:** When designated, preproduction parts are prototypes/experimental devices, and are not yet approved or released for full production. Testing and final process, including without limitation quality assurance, reliability performance testing, and/or process qualification, may not yet be complete, and this item is subject to further changes or possible discontinuation. If available for ordering, purchases will be subject to an additional waiver at checkout, and are intended for early internal evaluation purposes only. These items are sold without warranties of any kind.

(3) **RoHS values:** Yes, No, RoHS Exempt. See the TI RoHS Statement for additional information and value definition.

(4) **Lead finish/Ball material:** Parts may have multiple material finish options. Finish options are separated by a vertical ruled line. Lead finish/Ball material values may wrap to two lines if the finish value exceeds the maximum column width.

(5) **MSL rating/Peak reflow:** The moisture sensitivity level ratings and peak solder (reflow) temperatures. In the event that a part has multiple moisture sensitivity ratings, only the lowest level per JEDEC standards is shown. Refer to the shipping label for the actual reflow temperature that will be used to mount the part to the printed circuit board.

(6) **Part marking:** There may be an additional marking, which relates to the logo, the lot trace code information, or the environmental category of the part.

Multiple part markings will be inside parentheses. Only one part marking contained in parentheses and separated by a "~" will appear on a part. If a line is indented then it is a continuation of the previous line and the two combined represent the entire part marking for that device.

Important Information and Disclaimer: The information provided on this page represents TI's knowledge and belief as of the date that it is provided. TI bases its knowledge and belief on information provided by third parties, and makes no representation or warranty as to the accuracy of such information. Efforts are underway to better integrate information from third parties. TI has taken and continues to take reasonable steps to provide representative

and accurate information but may not have conducted destructive testing or chemical analysis on incoming materials and chemicals. TI and TI suppliers consider certain information to be proprietary, and thus CAS numbers and other limited information may not be available for release.

In no event shall TI's liability arising out of such information exceed the total purchase price of the TI part(s) at issue in this document sold by TI to Customer on an annual basis.

OTHER QUALIFIED VERSIONS OF TPS2062, TPS2065, TPS2066 :

- Automotive : TPS2062-Q1, TPS2065-Q1, TPS2066-Q1

NOTE: Qualified Version Definitions:

- Automotive - Q100 devices qualified for high-reliability automotive applications targeting zero defects

TAPE AND REEL INFORMATION

REEL DIMENSIONS

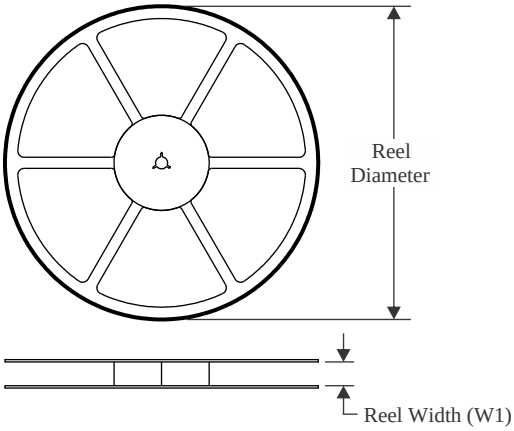

TAPE DIMENSIONS

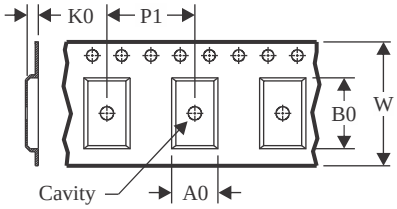

A0	Dimension designed to accommodate the component width
B0	Dimension designed to accommodate the component length
K0	Dimension designed to accommodate the component thickness
W	Overall width of the carrier tape
P1	Pitch between successive cavity centers

QUADRANT ASSIGNMENTS FOR PIN 1 ORIENTATION IN TAPE

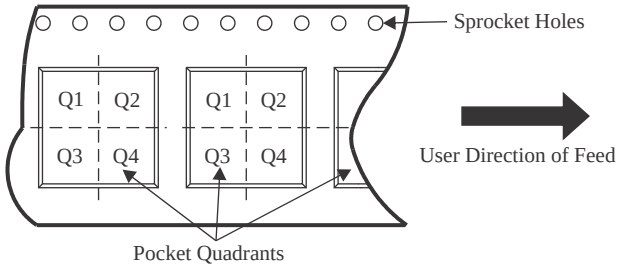

*All dimensions are nominal

Device	Package Type	Package Drawing	Pins	SPQ	Reel Diameter (mm)	Reel Width W1 (mm)	A0 (mm)	B0 (mm)	K0 (mm)	P1 (mm)	W (mm)	Pin1 Quadrant
TPS2061DBVR	SOT-23	DBV	5	3000	180.0	8.4	3.2	3.2	1.4	4.0	8.0	Q3
TPS2061DBVR	SOT-23	DBV	5	3000	180.0	8.4	3.2	3.2	1.4	4.0	8.0	Q3
TPS2061DBVRG4	SOT-23	DBV	5	3000	180.0	8.4	3.2	3.2	1.4	4.0	8.0	Q3
TPS2061DGNR	HVSSOP	DGN	8	2500	330.0	12.4	5.3	3.4	1.4	8.0	12.0	Q1
TPS2061DGNR	HVSSOP	DGN	8	2500	330.0	12.4	5.3	3.3	1.3	8.0	12.0	Q1
TPS2061DGNR	HVSSOP	DGN	8	2500	330.0	12.4	6.4	5.2	2.1	8.0	12.0	Q1
TPS2061DR	SOIC	D	8	2500	330.0	12.4	6.4	5.2	2.1	8.0	12.0	Q1
TPS2061DR	SOIC	D	8	2500	330.0	12.4	6.4	5.2	2.1	8.0	12.0	Q1
TPS2062DGNR	HVSSOP	DGN	8	2500	330.0	12.4	6.4	5.2	2.1	8.0	12.0	Q1
TPS2062DGNR	HVSSOP	DGN	8	2500	330.0	12.4	5.3	3.3	1.3	8.0	12.0	Q1
TPS2062DGNR	HVSSOP	DGN	8	2500	330.0	12.4	5.3	3.4	1.4	8.0	12.0	Q1
TPS2062DR	SOIC	D	8	2500	330.0	12.4	6.4	5.2	2.1	8.0	12.0	Q1
TPS2062DR	SOIC	D	8	2500	330.0	12.4	6.4	5.2	2.1	8.0	12.0	Q1
TPS2063DR	SOIC	D	16	2500	330.0	16.4	6.5	10.3	2.1	8.0	16.0	Q1
TPS2065DBVR	SOT-23	DBV	5	3000	180.0	8.4	3.2	3.2	1.4	4.0	8.0	Q3
TPS2065DGNR	HVSSOP	DGN	8	2500	330.0	12.4	5.3	3.3	1.3	8.0	12.0	Q1

Device	Package Type	Package Drawing	Pins	SPQ	Reel Diameter (mm)	Reel Width W1 (mm)	A0 (mm)	B0 (mm)	K0 (mm)	P1 (mm)	W (mm)	Pin1 Quadrant
TPS2065DGNR	HVSSOP	DGN	8	2500	330.0	12.4	6.4	5.2	2.1	8.0	12.0	Q1
TPS2065DGNR	HVSSOP	DGN	8	2500	330.0	12.4	5.3	3.4	1.4	8.0	12.0	Q1
TPS2065DR	SOIC	D	8	2500	330.0	12.4	6.4	5.2	2.1	8.0	12.0	Q1
TPS2065DR	SOIC	D	8	2500	330.0	12.4	6.4	5.2	2.1	8.0	12.0	Q1
TPS2065DRG4	SOIC	D	8	2500	330.0	12.4	6.4	5.2	2.1	8.0	12.0	Q1
TPS2066DGNR	HVSSOP	DGN	8	2500	330.0	12.4	5.3	3.3	1.3	8.0	12.0	Q1
TPS2066DGNR	HVSSOP	DGN	8	2500	330.0	12.4	5.3	3.4	1.4	8.0	12.0	Q1
TPS2066DGNR	HVSSOP	DGN	8	2500	330.0	12.4	6.4	5.2	2.1	8.0	12.0	Q1
TPS2066DR	SOIC	D	8	2500	330.0	12.4	6.4	5.2	2.1	8.0	12.0	Q1
TPS2066DR	SOIC	D	8	2500	330.0	12.4	6.4	5.2	2.1	8.0	12.0	Q1
TPS2067DR	SOIC	D	16	2500	330.0	16.4	6.5	10.3	2.1	8.0	16.0	Q1

TAPE AND REEL BOX DIMENSIONS

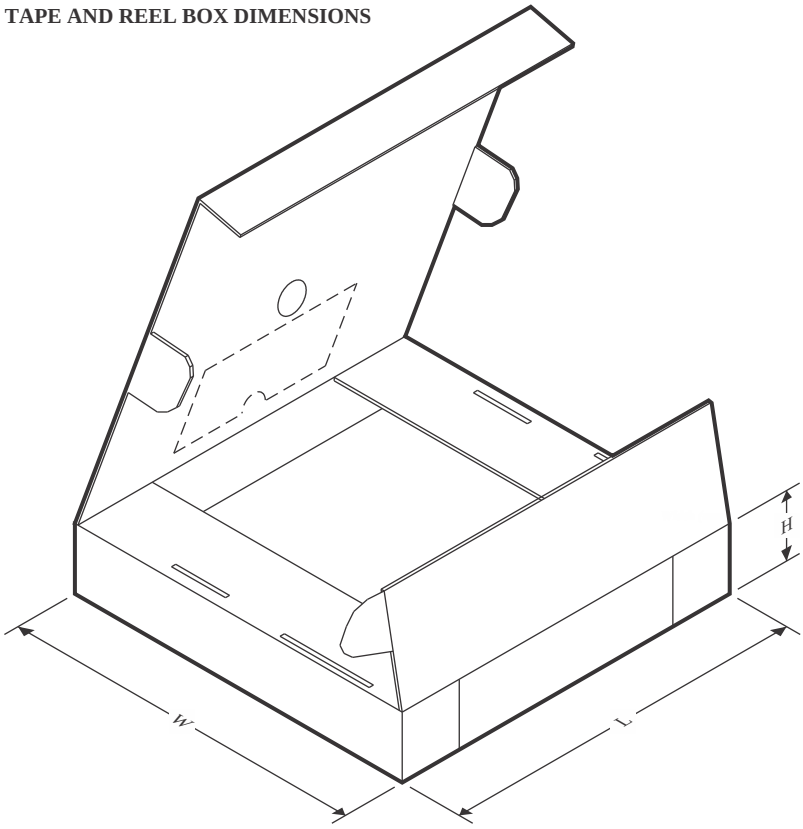

*All dimensions are nominal

Device	Package Type	Package Drawing	Pins	SPQ	Length (mm)	Width (mm)	Height (mm)
TPS2061DBVR	SOT-23	DBV	5	3000	200.0	183.0	25.0
TPS2061DBVR	SOT-23	DBV	5	3000	210.0	185.0	35.0
TPS2061DBVRG4	SOT-23	DBV	5	3000	200.0	183.0	25.0
TPS2061DGNR	HVSSOP	DGN	8	2500	364.0	364.0	27.0
TPS2061DGNR	HVSSOP	DGN	8	2500	346.0	346.0	35.0
TPS2061DGNR	HVSSOP	DGN	8	2500	353.0	353.0	32.0
TPS2061DR	SOIC	D	8	2500	353.0	353.0	32.0
TPS2061DR	SOIC	D	8	2500	353.0	353.0	32.0
TPS2062DGNR	HVSSOP	DGN	8	2500	353.0	353.0	32.0
TPS2062DGNR	HVSSOP	DGN	8	2500	346.0	346.0	35.0
TPS2062DGNR	HVSSOP	DGN	8	2500	364.0	364.0	27.0
TPS2062DR	SOIC	D	8	2500	353.0	353.0	32.0
TPS2062DR	SOIC	D	8	2500	353.0	353.0	32.0
TPS2063DR	SOIC	D	16	2500	350.0	350.0	43.0
TPS2065DBVR	SOT-23	DBV	5	3000	210.0	185.0	35.0
TPS2065DGNR	HVSSOP	DGN	8	2500	346.0	346.0	35.0
TPS2065DGNR	HVSSOP	DGN	8	2500	353.0	353.0	32.0
TPS2065DGNR	HVSSOP	DGN	8	2500	364.0	364.0	27.0

Device	Package Type	Package Drawing	Pins	SPQ	Length (mm)	Width (mm)	Height (mm)
TPS2065DR	SOIC	D	8	2500	353.0	353.0	32.0
TPS2065DR	SOIC	D	8	2500	353.0	353.0	32.0
TPS2065DRG4	SOIC	D	8	2500	353.0	353.0	32.0
TPS2066DGNR	HVSSOP	DGN	8	2500	346.0	346.0	35.0
TPS2066DGNR	HVSSOP	DGN	8	2500	364.0	364.0	27.0
TPS2066DGNR	HVSSOP	DGN	8	2500	353.0	353.0	32.0
TPS2066DR	SOIC	D	8	2500	353.0	353.0	32.0
TPS2066DR	SOIC	D	8	2500	353.0	353.0	32.0
TPS2067DR	SOIC	D	16	2500	353.0	353.0	32.0

TUBE

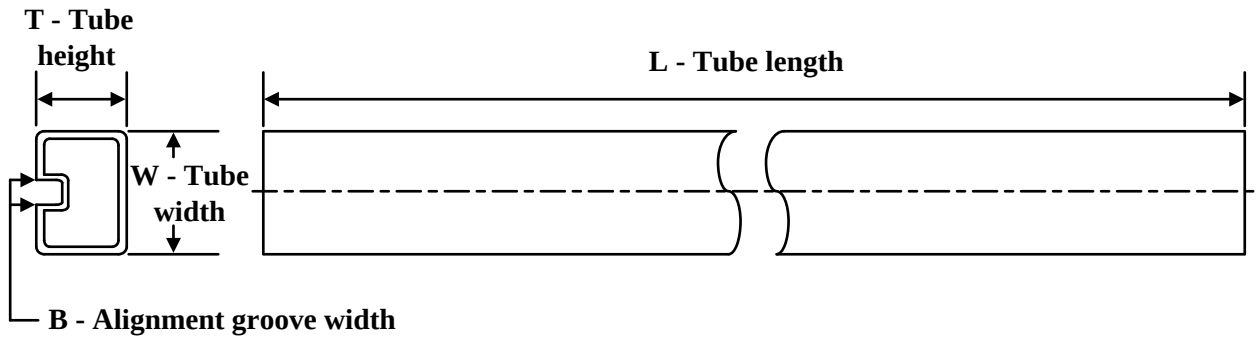

*All dimensions are nominal

Device	Package Name	Package Type	Pins	SPQ	L (mm)	W (mm)	T (µm)	B (mm)
TPS2063D	D	SOIC	16	40	505.46	6.76	3810	4
TPS2063D.A	D	SOIC	16	40	505.46	6.76	3810	4
TPS2067D	D	SOIC	16	40	507	8	3940	4.32
TPS2067D.A	D	SOIC	16	40	507	8	3940	4.32

PACKAGE OUTLINE

DBV0005A

SOT-23 - 1.45 mm max height

SMALL OUTLINE TRANSISTOR

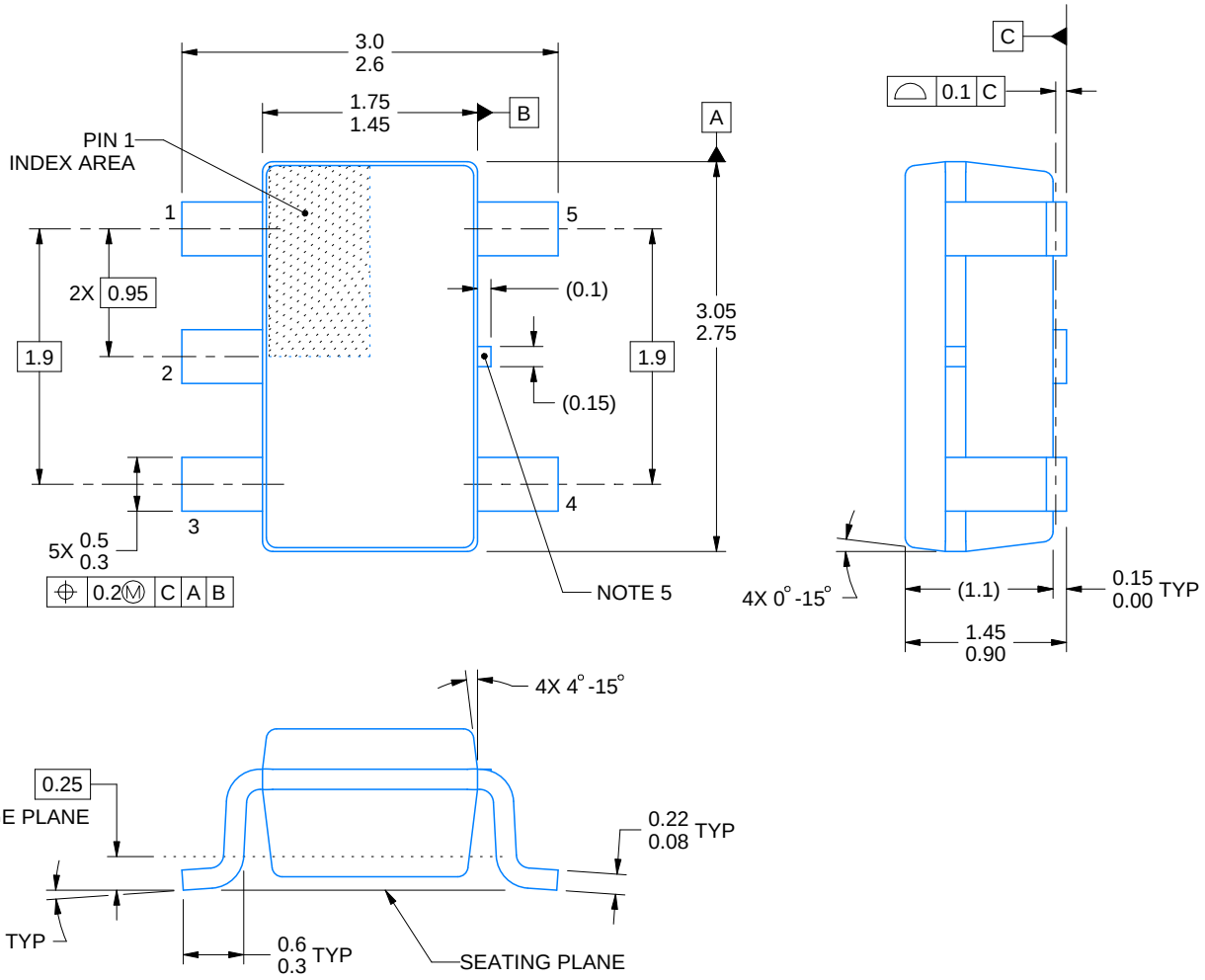

4214839/K 08/2024

NOTES:

1. All linear dimensions are in millimeters. Any dimensions in parenthesis are for reference only. Dimensioning and tolerancing per ASME Y14.5M.
2. This drawing is subject to change without notice.
3. Refernce JEDEC MO-178.
4. Body dimensions do not include mold flash, protrusions, or gate burrs. Mold flash, protrusions, or gate burrs shall not exceed 0.25 mm per side.
5. Support pin may differ or may not be present.

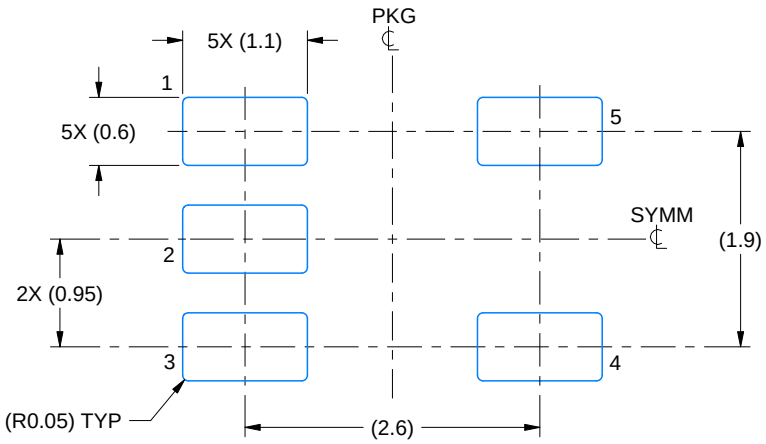

LAND PATTERN EXAMPLE
EXPOSED METAL SHOWN
SCALE:15X

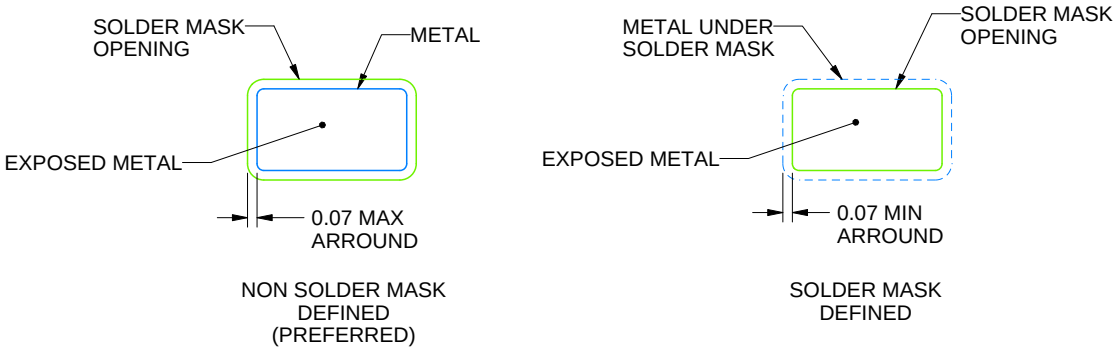

SOLDER MASK DETAILS

4214839/K 08/2024

NOTES: (continued)

6. Publication IPC-7351 may have alternate designs.
7. Solder mask tolerances between and around signal pads can vary based on board fabrication site.

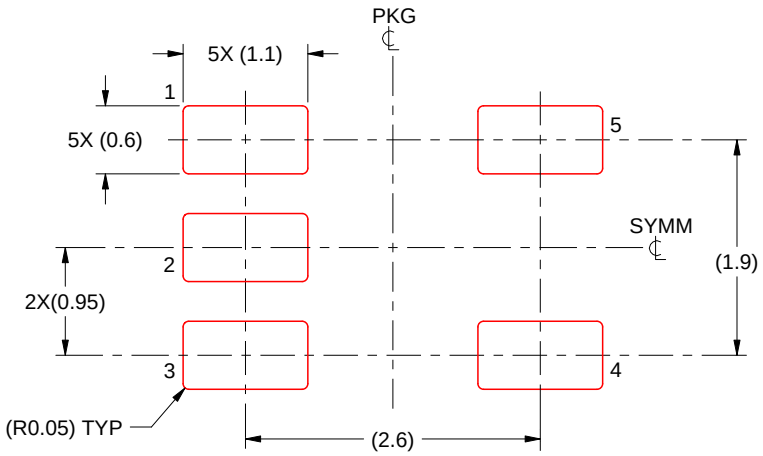

SOLDER PASTE EXAMPLE
BASED ON 0.125 mm THICK STENCIL
SCALE:15X

4214839/K 08/2024

NOTES: (continued)

8. Laser cutting apertures with trapezoidal walls and rounded corners may offer better paste release. IPC-7525 may have alternate design recommendations.
9. Board assembly site may have different recommendations for stencil design.

D (R–PDSO–G16) PLASTIC SMALL OUTLINE

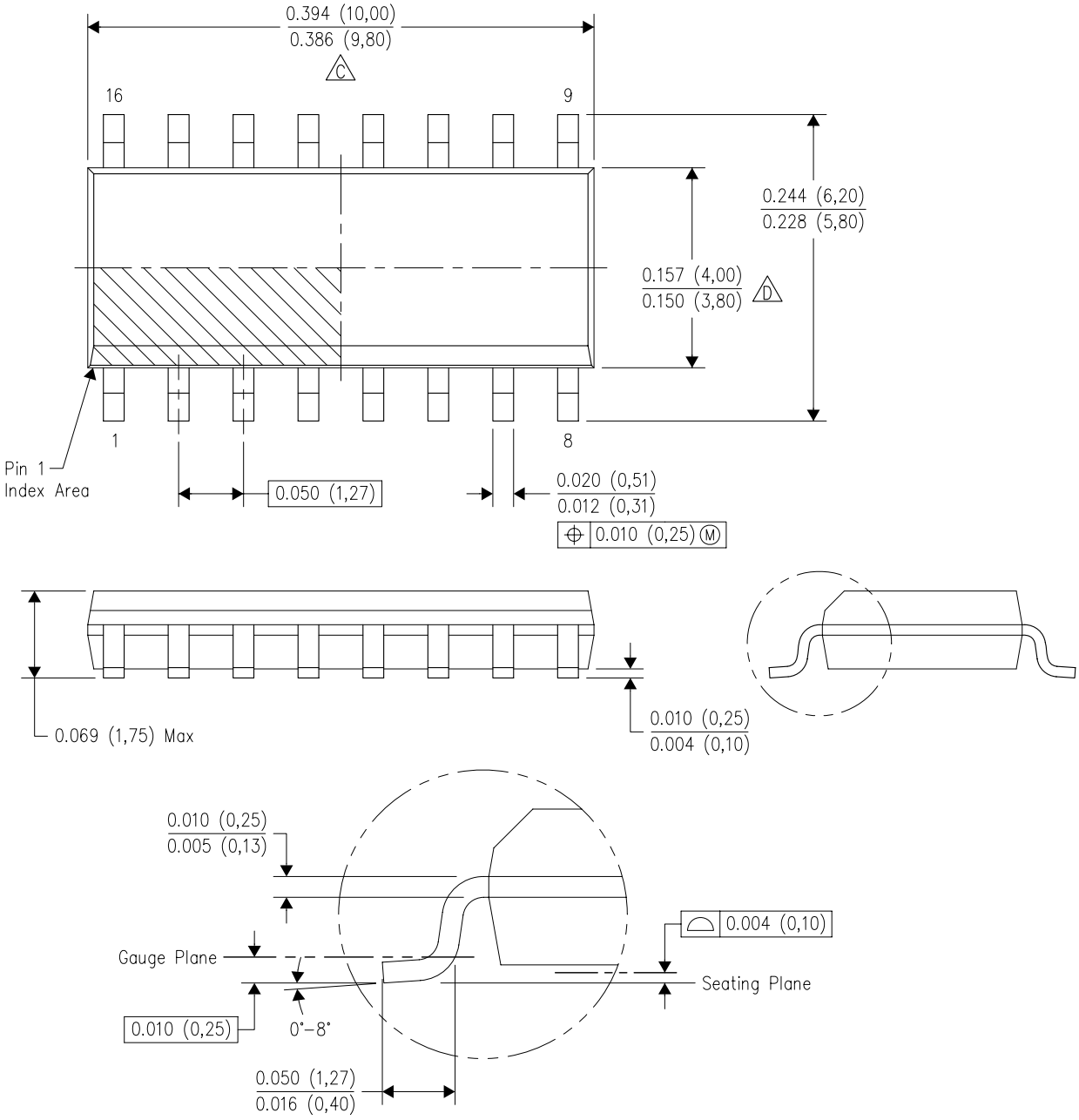

NOTES:
A. All linear dimensions are in inches (millimeters).
B. This drawing is subject to change without notice.
C. Body length does not include mold flash, protrusions, or gate burrs. Mold flash, protrusions, or gate burrs shall not exceed 0.006 (0,15) each side.
D. Body width does not include interlead flash. Interlead flash shall not exceed 0.017 (0,43) each side.
E. Reference JEDEC MS–012 variation AC.

GENERIC PACKAGE VIEW

DGN 8

PowerPAD™ HVSSOP - 1.1 mm max height

3 x 3, 0.65 mm pitch

SMALL OUTLINE PACKAGE

This image is a representation of the package family, actual package may vary.
Refer to the product data sheet for package details.

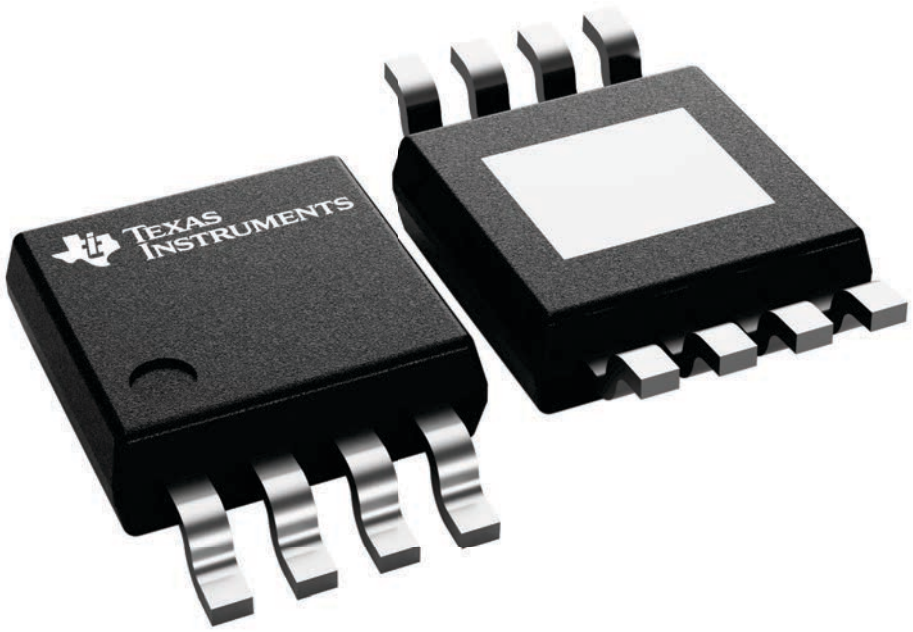

4225482/B

PACKAGE OUTLINE

DGN0008C

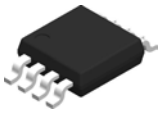

HVSSOP - 1.1 mm max height

SMALL OUTLINE PACKAGE

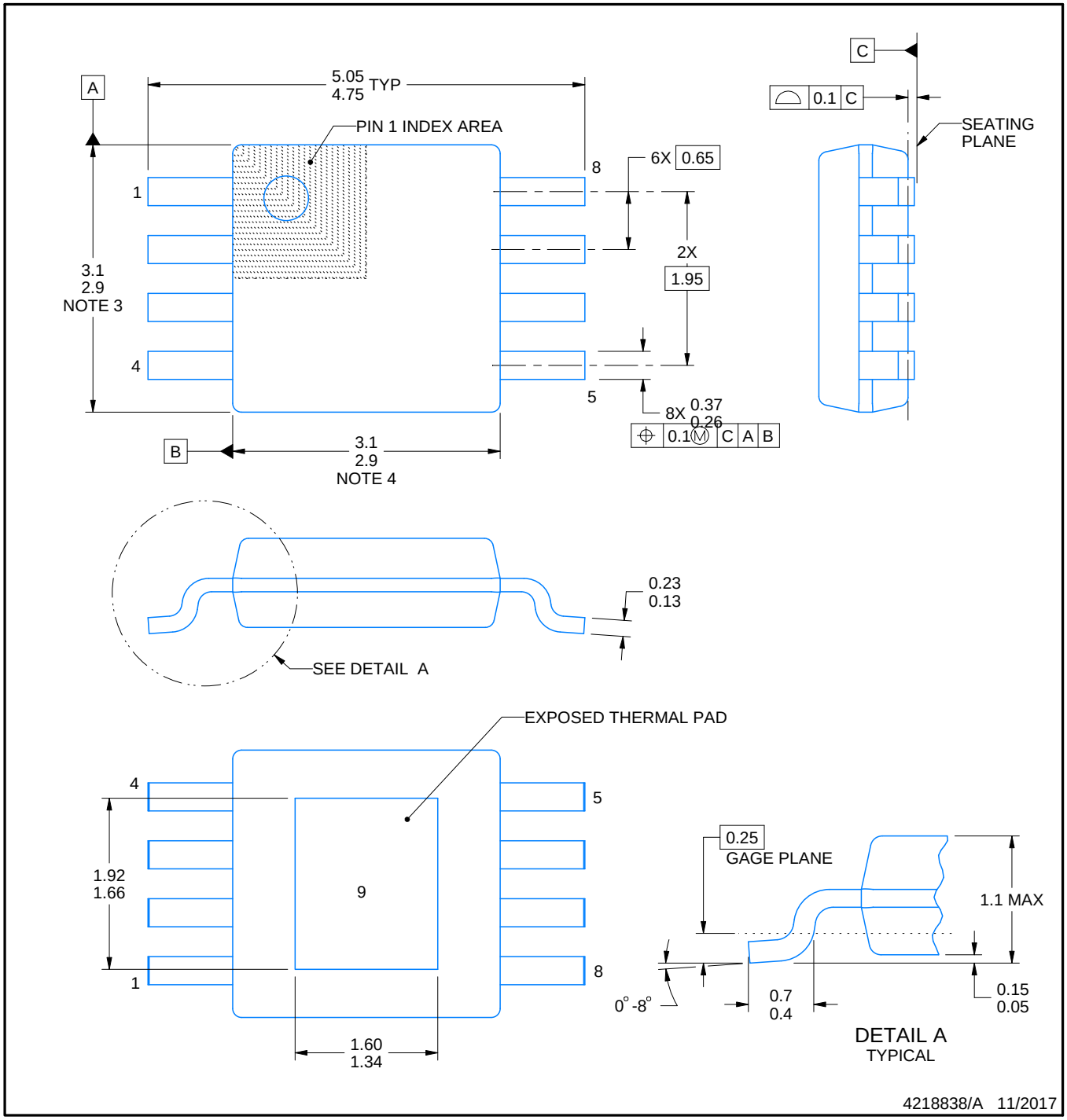

NOTES:

1. All linear dimensions are in millimeters. Any dimensions in parenthesis are for reference only. Dimensioning and tolerancing per ASME Y14.5M.
2. This drawing is subject to change without notice.
3. This dimension does not include mold flash, protrusions, or gate burrs. Mold flash, protrusions, or gate burrs shall not exceed 0.15 mm per side.
4. This dimension does not include interlead flash. Interlead flash shall not exceed 0.25 mm per side.
5. Reference JEDEC registration MO-187.

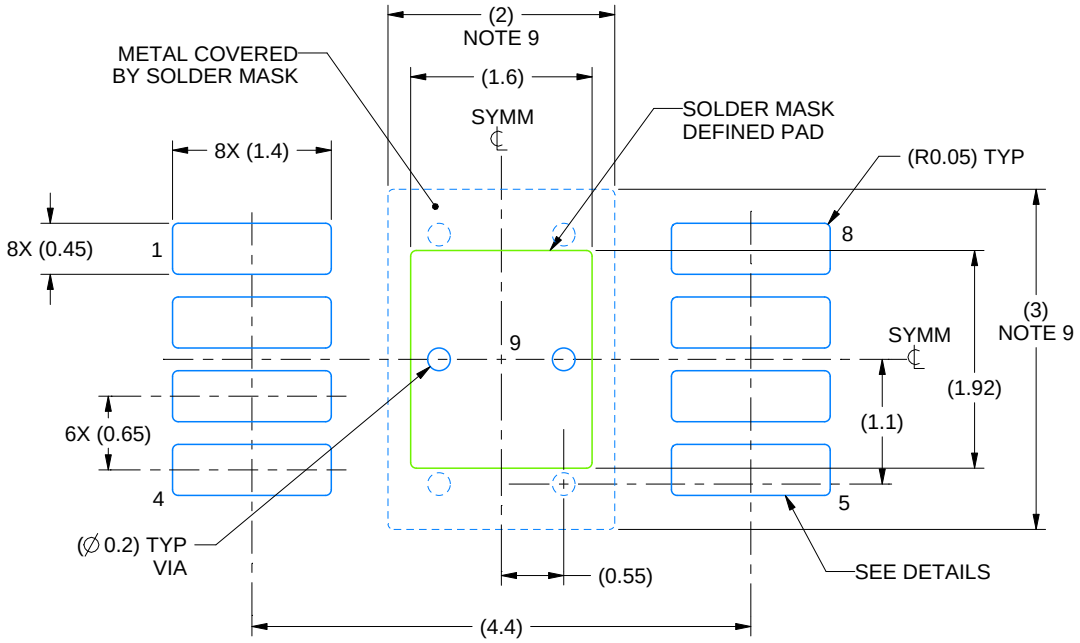

LAND PATTERN EXAMPLE
EXPOSED METAL SHOWN
SCALE: 15X

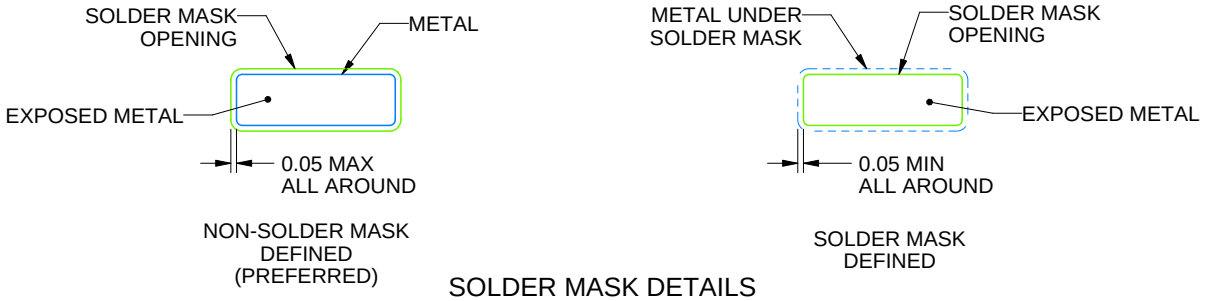

SOLDER MASK DETAILS

4218838/A 11/2017

NOTES: (continued)

6. Publication IPC-7351 may have alternate designs.
7. Solder mask tolerances between and around signal pads can vary based on board fabrication site.
8. Vias are optional depending on application, refer to device data sheet. If any vias are implemented, refer to their locations shown on this view. It is recommended that vias under paste be filled, plugged or tented.
9. Size of metal pad may vary due to creepage requirement.

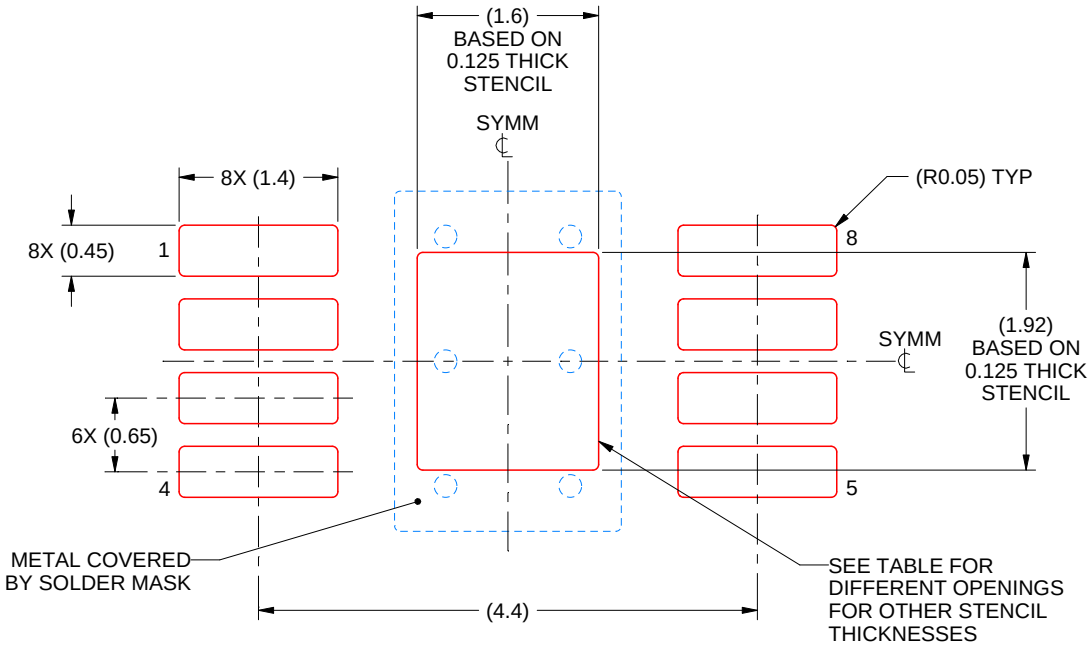

SOLDER PASTE EXAMPLE
EXPOSED PAD 9:
100% PRINTED SOLDER COVERAGE BY AREA
SCALE: 15X

STENCIL THICKNESS	SOLDER STENCIL OPENING
0.1	1.79 X 2.15
0.125	1.60 X 1.92 (SHOWN)
0.15	1.46 X 1.75
0.175	1.35 X 1.62

4218838/A 11/2017

NOTES: (continued)

10. Laser cutting apertures with trapezoidal walls and rounded corners may offer better paste release. IPC-7525 may have alternate design recommendations.
11. Board assembly site may have different recommendations for stencil design.

PACKAGE OUTLINE

DGN0008G

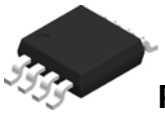

PowerPAD™ HVSSOP - 1.1 mm max height

SMALL OUTLINE PACKAGE

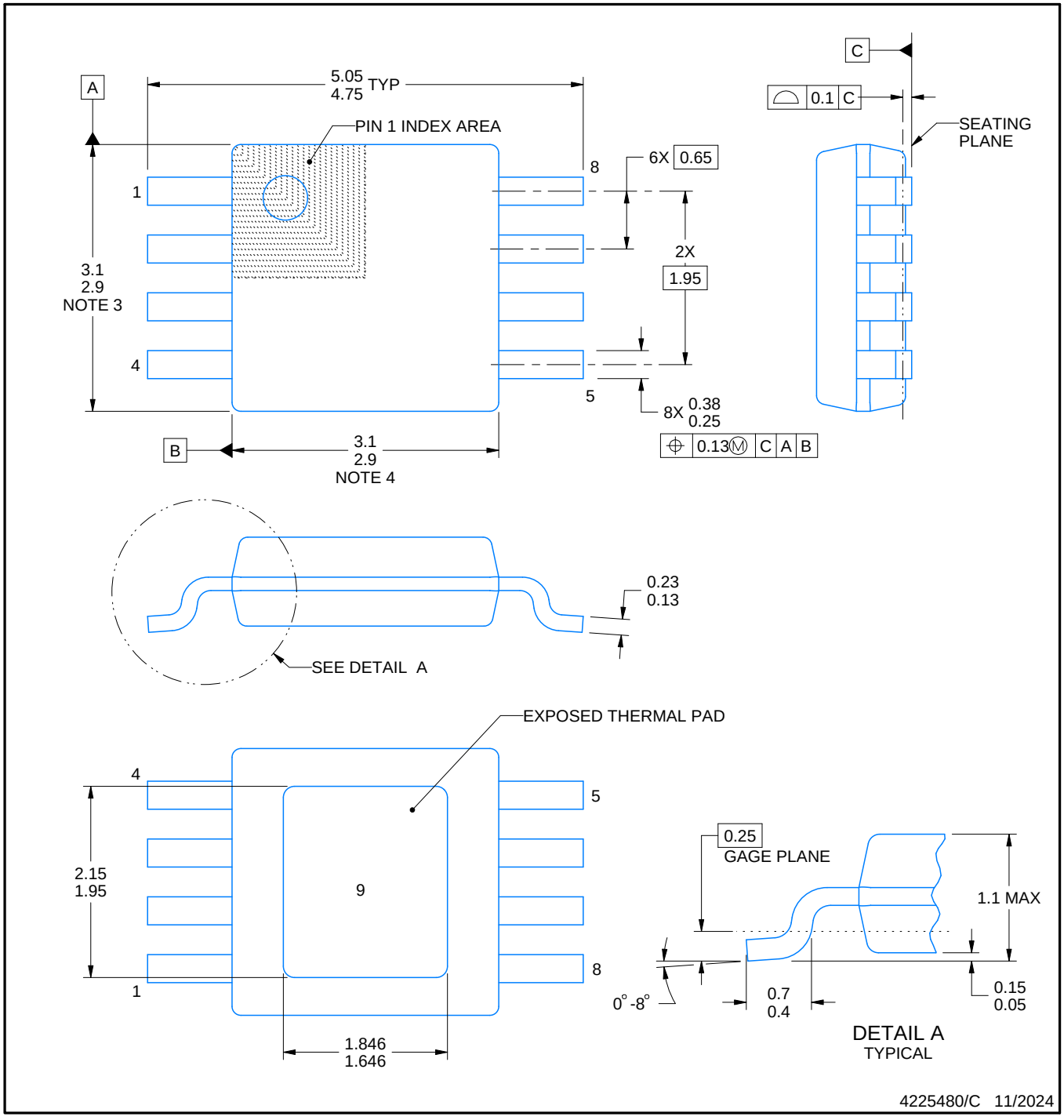

PowerPAD is a trademark of Texas Instruments.

NOTES:

1. All linear dimensions are in millimeters. Any dimensions in parenthesis are for reference only. Dimensioning and tolerancing per ASME Y14.5M.
2. This drawing is subject to change without notice.
3. This dimension does not include mold flash, protrusions, or gate burrs. Mold flash, protrusions, or gate burrs shall not exceed 0.15 mm per side.
4. This dimension does not include interlead flash. Interlead flash shall not exceed 0.25 mm per side.
5. Reference JEDEC registration MO-187.

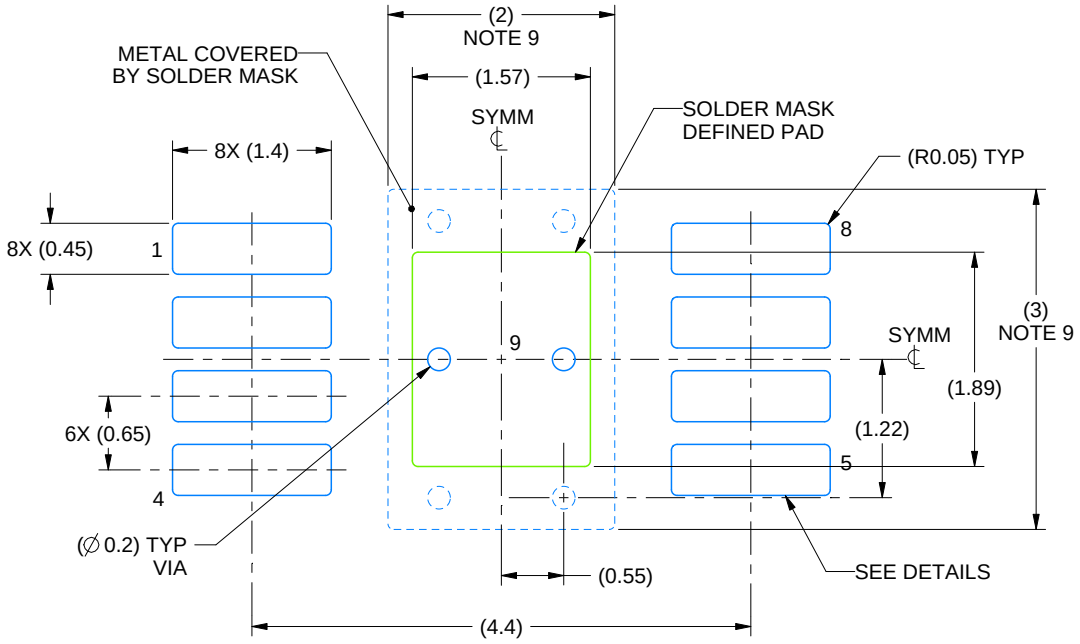

LAND PATTERN EXAMPLE
EXPOSED METAL SHOWN
SCALE: 15X

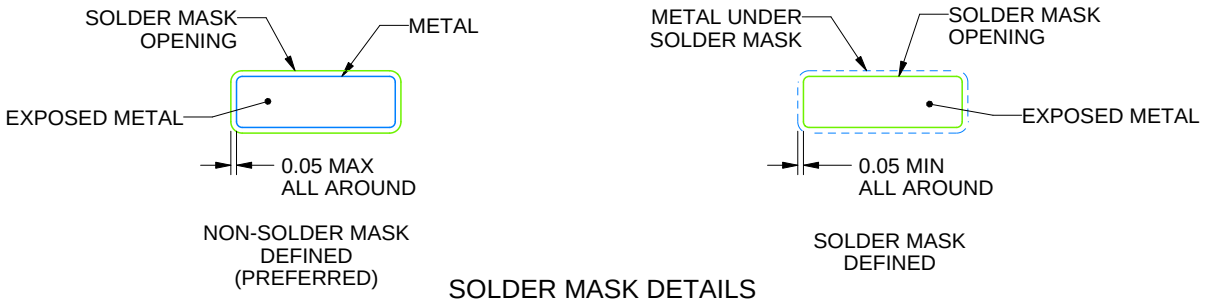

SOLDER MASK DETAILS

4225480/C 11/2024

NOTES: (continued)

6. Publication IPC-7351 may have alternate designs.
7. Solder mask tolerances between and around signal pads can vary based on board fabrication site.
8. Vias are optional depending on application, refer to device data sheet. If any vias are implemented, refer to their locations shown on this view. It is recommended that vias under paste be filled, plugged or tented.
9. Size of metal pad may vary due to creepage requirement.

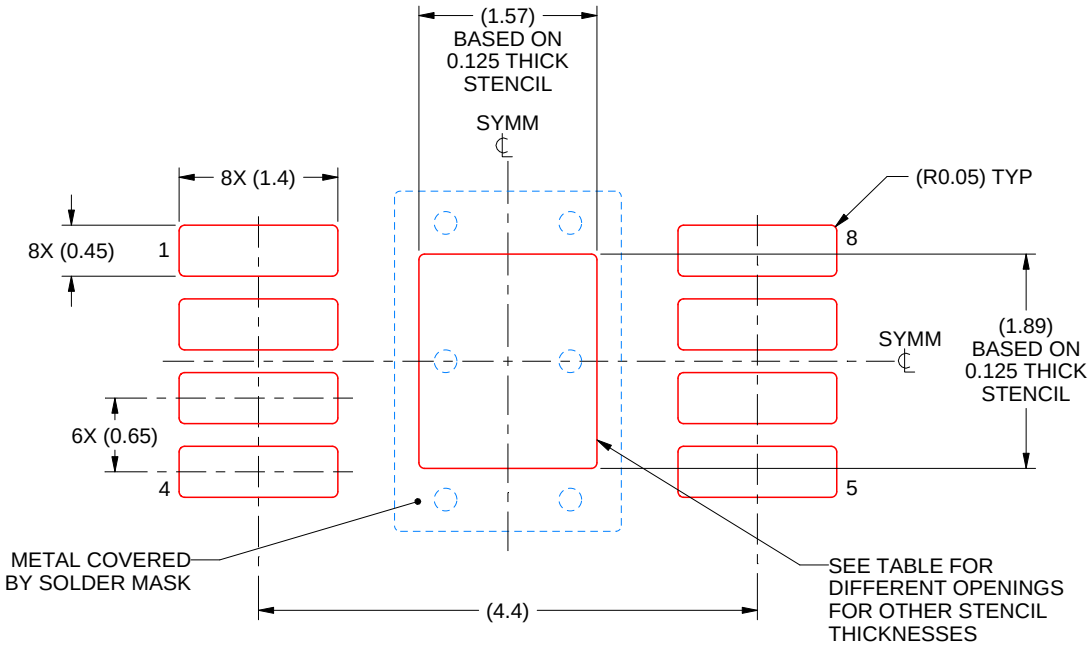

SOLDER PASTE EXAMPLE
EXPOSED PAD 9:
100% PRINTED SOLDER COVERAGE BY AREA
SCALE: 15X

STENCIL THICKNESS	SOLDER STENCIL OPENING
0.1	1.76 X 2.11
0.125	1.57 X 1.89 (SHOWN)
0.15	1.43 X 1.73
0.175	1.33 X 1.60

4225480/C 11/2024

NOTES: (continued)

10. Laser cutting apertures with trapezoidal walls and rounded corners may offer better paste release. IPC-7525 may have alternate design recommendations.
11. Board assembly site may have different recommendations for stencil design.

PACKAGE OUTLINE

DGN0008K

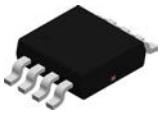

PowerPAD™ VSSOP - 1.1 mm max height

SMALL OUTLINE PACKAGE

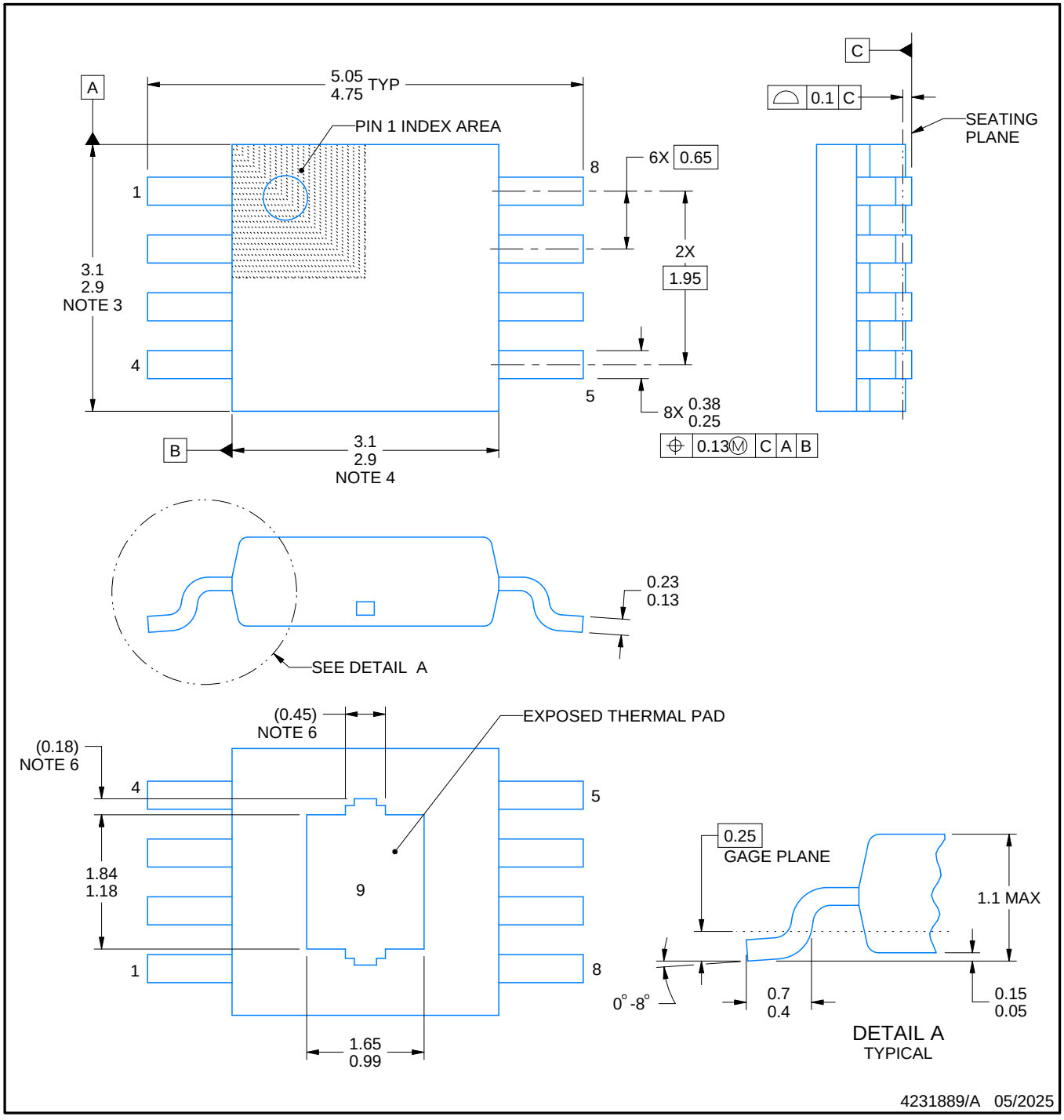

PowerPAD is a trademark of Texas Instruments.

NOTES:

1. All linear dimensions are in millimeters. Any dimensions in parenthesis are for reference only. Dimensioning and tolerancing per ASME Y14.5M.
2. This drawing is subject to change without notice.
3. This dimension does not include mold flash, protrusions, or gate burrs. Mold flash, protrusions, or gate burrs shall not exceed 0.15 mm per side.
4. This dimension does not include interlead flash. Interlead flash shall not exceed 0.25 mm per side.
5. Reference JEDEC registration MO-187.
6. Features may differ or may not be present.

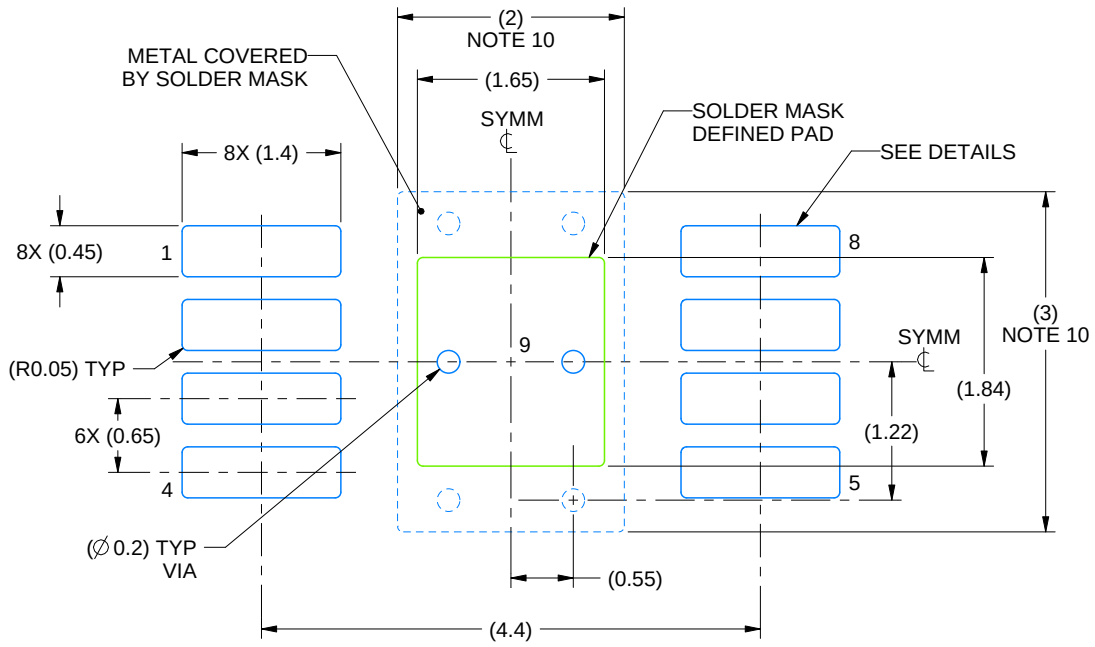

LAND PATTERN EXAMPLE
EXPOSED METAL SHOWN
SCALE: 15X

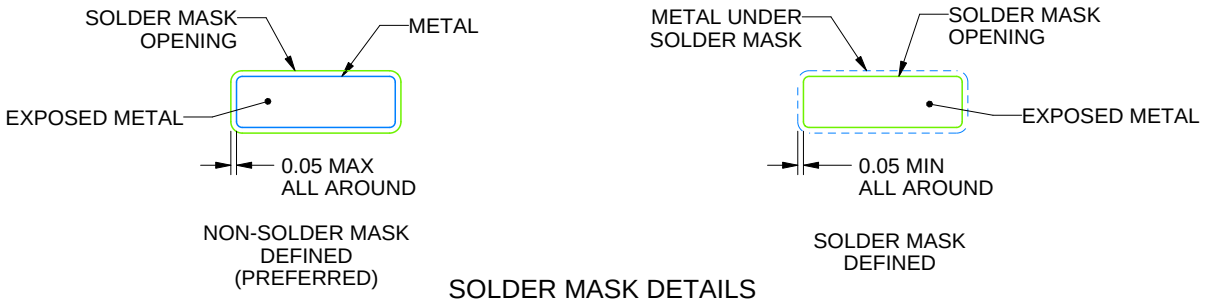

SOLDER MASK DETAILS

4231889/A 05/2025

NOTES: (continued)

7. Publication IPC-7351 may have alternate designs.
8. Solder mask tolerances between and around signal pads can vary based on board fabrication site.
9. Vias are optional depending on application, refer to device data sheet. If any vias are implemented, refer to their locations shown on this view. It is recommended that vias under paste be filled, plugged or tented.
10. Size of metal pad may vary due to creepage requirement.

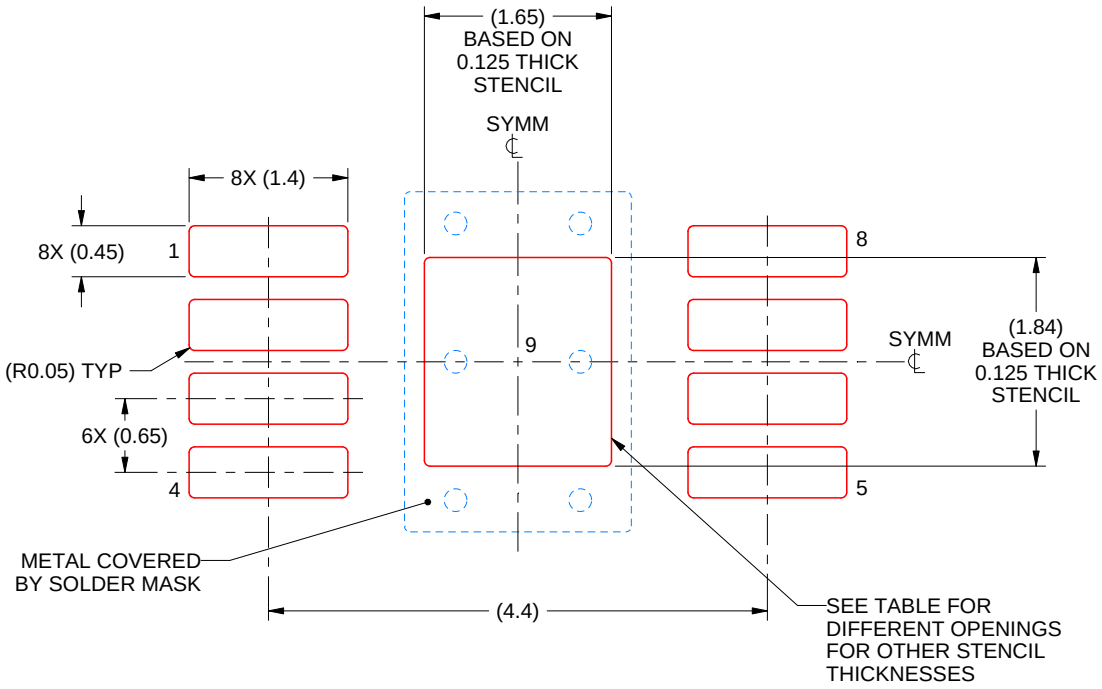

SOLDER PASTE EXAMPLE
EXPOSED PAD 9:
100% PRINTED SOLDER COVERAGE BY AREA
SCALE: 15X

STENCIL THICKNESS	SOLDER STENCIL OPENING
0.1	1.84 X 2.06
0.125	1.65 X 1.84 (SHOWN)
0.15	1.51 X 1.68
0.175	1.39 X 1.56

4231889/A 05/2025

NOTES: (continued)

11. Laser cutting apertures with trapezoidal walls and rounded corners may offer better paste release. IPC-7525 may have alternate design recommendations.
12. Board assembly site may have different recommendations for stencil design.

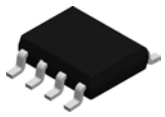

PACKAGE OUTLINE

D0008A

SOIC - 1.75 mm max height

SMALL OUTLINE INTEGRATED CIRCUIT

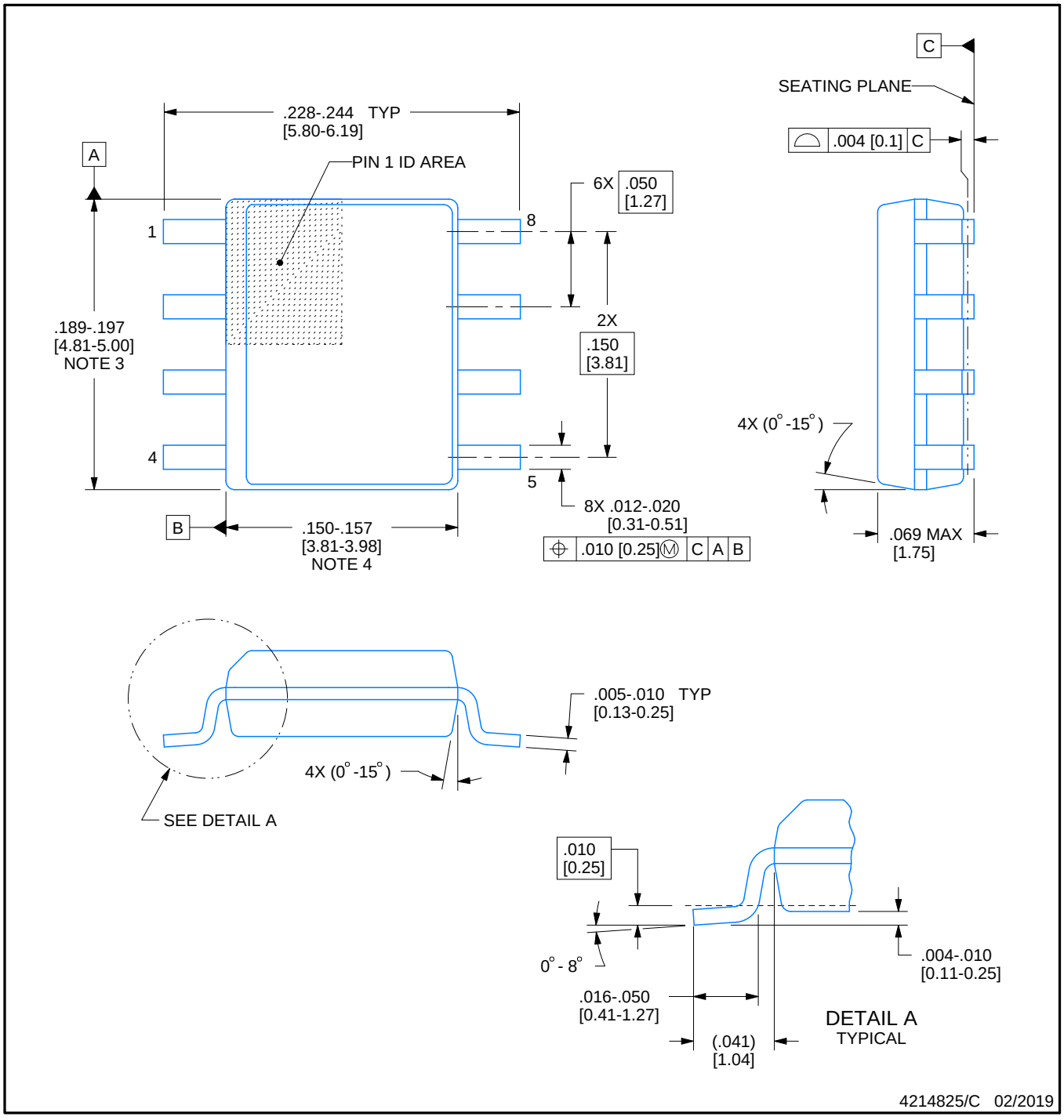

NOTES:

1. Linear dimensions are in inches [millimeters]. Dimensions in parenthesis are for reference only. Controlling dimensions are in inches. Dimensioning and tolerancing per ASME Y14.5M.
2. This drawing is subject to change without notice.
3. This dimension does not include mold flash, protrusions, or gate burrs. Mold flash, protrusions, or gate burrs shall not exceed .006 [0.15] per side.
4. This dimension does not include interlead flash.
5. Reference JEDEC registration MS-012, variation AA.

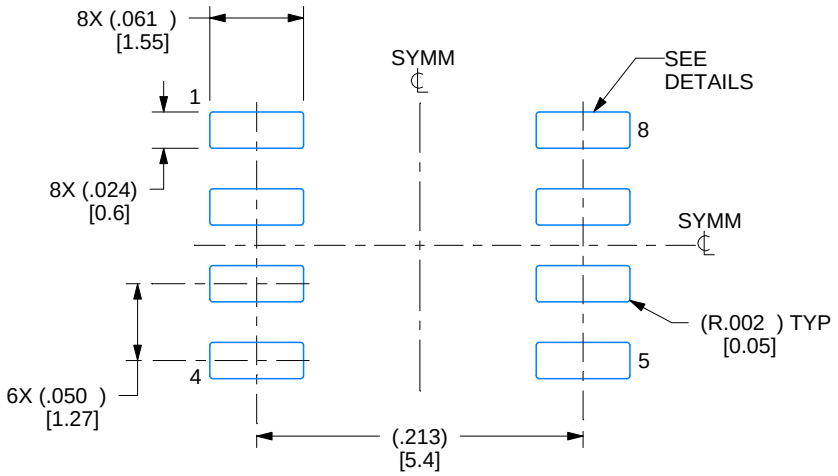

LAND PATTERN EXAMPLE
EXPOSED METAL SHOWN
SCALE:8X

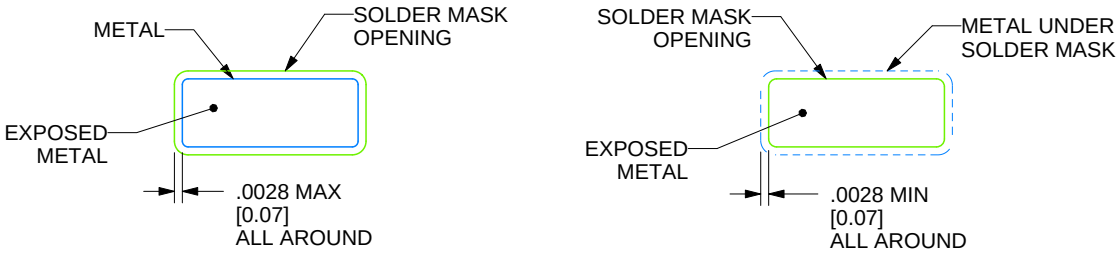

SOLDER MASK DETAILS

4214825/C 02/2019

NOTES: (continued)

6. Publication IPC-7351 may have alternate designs.
7. Solder mask tolerances between and around signal pads can vary based on board fabrication site.

EXAMPLE STENCIL DESIGN

D0008A

SOIC - 1.75 mm max height

SMALL OUTLINE INTEGRATED CIRCUIT

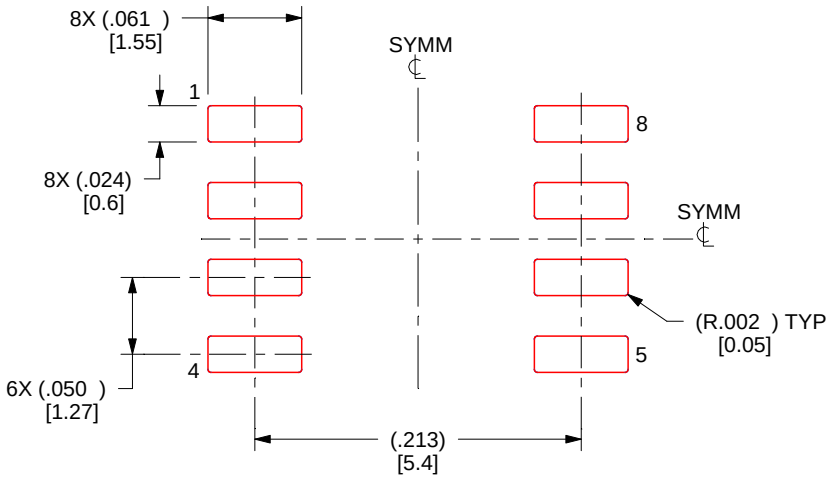

SOLDER PASTE EXAMPLE
BASED ON .005 INCH [0.125 MM] THICK STENCIL
SCALE:8X

4214825/C 02/2019

NOTES: (continued)

8. Laser cutting apertures with trapezoidal walls and rounded corners may offer better paste release. IPC-7525 may have alternate design recommendations.
9. Board assembly site may have different recommendations for stencil design.

重要通知和免责声明

TI“按原样”提供技术和可靠性数据（包括数据表）、设计资源（包括参考设计）、应用或其他设计建议、网络工具、安全信息和其他资源，不保证没有瑕疵且不做出任何明示或暗示的担保，包括但不限于对适销性、与某特定用途的适用性或不侵犯任何第三方知识产权的暗示担保。

这些资源可供使用 TI 产品进行设计的熟练开发人员使用。您将自行承担以下全部责任：(1) 针对您的应用选择合适的 TI 产品，(2) 设计、验证并测试您的应用，(3) 确保您的应用满足相应标准以及任何其他安全、安保法规或其他要求。

这些资源如有变更，恕不另行通知。TI 授权您仅可将这些资源用于研发本资源所述的 TI 产品的相关应用。严禁以其他方式对这些资源进行复制或展示。您无权使用任何其他 TI 知识产权或任何第三方知识产权。对于因您对这些资源的使用而对 TI 及其代表造成的任何索赔、损害、成本、损失和债务，您将全额赔偿，TI 对此概不负责。

TI 提供的产品受 TI 销售条款)、TI 通用质量指南 或 ti.com 上其他适用条款或 TI 产品随附的其他适用条款的约束。TI 提供这些资源并不会扩展或以其他方式更改 TI 针对 TI 产品发布的适用的担保或担保免责声明。 除非德州仪器 (TI) 明确将某产品指定为定制产品或客户特定产品，否则其产品均为按确定价格收入目录的标准通用器件。

TI 反对并拒绝您可能提出的任何其他或不同的条款。

版权所有 © 2026，德州仪器 (TI) 公司

最后更新日期：2025 年 10 月