TPS37 具有可编程检测和复位延迟功能的宽 V_{IN} 65V 双通道过压和欠压（OV 和 UV）检测器

1 特性

- 功能安全型
  - 可提供用于功能安全系统设计的文档
- 宽电源电压范围：2.7V 至 65V
- SENSE 和 RESET 引脚为 65V 等级
- 低静态电流：1μA（典型值）
- 灵活而广泛的电压阈值选项 表 11-1
  - 2.7V 至 36V（最高精度 1.5%）
  - 800mV 选项（最高精度 1%）
- 内置迟滞 (V_{HYS})
  - 百分比选项：2% 至 13%（阶跃 1%）
  - 固定选项：V_{TH} < 8V = 0.5V、1V、1.5V、2V、2.5V
- 可编程复位延时时间
  - 10 nF = 12.8 ms, 10 μF = 12.8 s
- 可编程感测延时时间
  - 10nF = 1.28ms、10 μF = 1.28s
- 手动复位 ($\overline{MR}$) 特性
- 输出拓扑：开漏或推挽

2 应用

- 模拟输入模块
- CPU（PLC 控制器）
- 伺服驱动器控制模块
- 伺服驱动器功率级模块
- 伺服驱动器功能安全模块
- HVAC 阀门和传动器控制

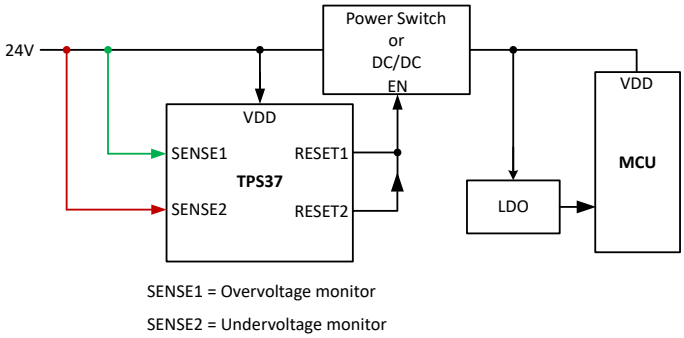

典型应用电路

3 说明

TPS37 是一系列宽输入范围和低静态电流窗口监控器，用于快速检测过压 (OV) 和欠压 (UV) 条件。每个器件都包括一个精密内部基准、两个独立且可配置的电压比较器和集成电阻分压器。TPS37 可以直接连接到并监控各种工业应用中的 12V/24V 电源轨，包括工厂自动化、电机驱动器、楼宇自动化等应用。SENSE 引脚上的内置迟滞可在监测电源电压轨时防止出现错误的复位信号。

通过单独的 VDD 和 SENSE 引脚，可实现高可靠性系统所需的冗余。SENSE 已从 VDD 去耦，可以监控高于和低于 VDD 的电压。SENSE 引脚的高阻抗输入支持使用可选的外部电阻器。通过 CTSx 和 CTRx 引脚，可以对 RESET 信号的上升沿和下降沿进行延迟调整。此外，CTSx 可忽略受监控电压轨上的电压干扰，从而充当去抖动器；CTRx 具有手动复位 ($\overline{MR}$) 的作用，可用于强制系统复位。

TPS37 采用 WSON 或 SOT-23 封装。根据 IEC60664 中的指南，中心垫片是不导电的，以增加 VDD 和 GND 之间的爬电距离。TPS37 的工作温度范围为 –40°C 至 +125°C T_A。

器件信息

器件型号	封装 (1)	封装尺寸（标称值）
TPS37	WSON (10) (DSK)	2.5mm × 2.5mm
TPS37	SOT-23 (14) (DYY)	4.1 mm × 1.9 mm

(1) 如需了解封装详细信息，请参阅数据表末尾的机械制图附录。

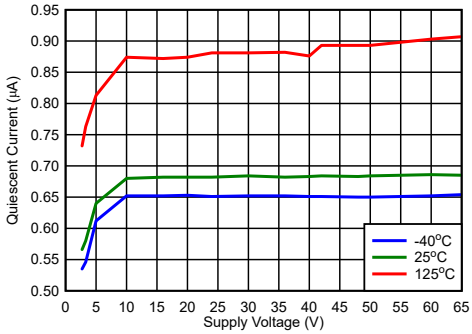

典型 I_{DD} 与 V_{DD}

本文档旨在为方便起见，提供有关 TI 产品中文版本的信息，以确认产品的概要。有关适用的官方英文版本的最新信息，请访问 www.ti.com，其内容始终优先。TI 不保证翻译的准确性和有效性。在实际设计之前，请务必参考最新版本的英文版本。

Table of Contents

1 特性 1
2 应用 1
3 说明 1
4 Revision History 2
5 Device Comparison 3
6 Pin Configuration and Functions 4
7 Specifications 6
7.1 Absolute Maximum Ratings 6
7.2 ESD Ratings 6
7.3 Recommended Operating Conditions 6
7.4 Thermal Information 6
7.5 Electrical Characteristics 7
7.6 Timing Requirements 9
7.7 Timing Diagrams 10
7.8 Typical Characteristics 13
8 Detailed Description 17
8.1 Overview 17
8.2 Functional Block Diagram 17
8.3 Feature Description 18
9 Device Functional Modes 26
10 Application and Implementation 27
10.1 Adjustable Voltage Thresholds 27
10.2 Application Information 28
10.3 Power Supply Recommendations 31
10.4 Layout 31
11 Device and Documentation Support 34
11.1 Device Nomenclature 34
11.2 支持资源 35
11.3 Trademarks 35
11.4 静电放电警告 35
11.5 术语表 35

4 Revision History

注：以前版本的页码可能与当前版本的页码不同

Changes from Revision D (December 2021) to Revision E (August 2023)	Page
• 添加了功能安全声明并删除了锁存功能	1
• Added Vit and Vhyst timing diagram	10
• Added CTS and CTR value plots	13

Changes from Revision C (September 2021) to Revision D (December 2021)	Page
• 将“预告信息”更改为“量产数据发布”	1

Copyright © 2023 Texas Instruments Incorporated

5 Device Comparison

Contact TI sales representatives or consult TI's E2E forum for details and availability; minimum order quantities may apply.

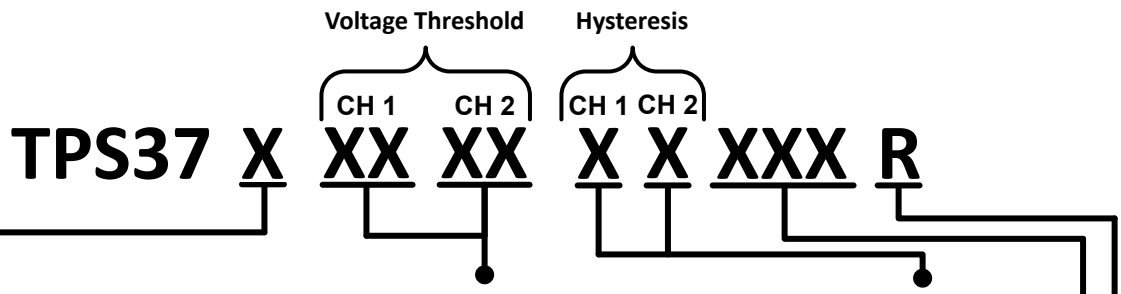

Topology

Suffix	CH1	CH2
A	OV OD L	UV OD L
B	OV PP H	UV OD L
C	OV OD L	UV OD H
D	OV PP H	UV OD H
E	OV OD H	UV OD H
F	OV OD H	UV OD L
G	OV PP L	UV OD H
H	OV PP L	UV OD L

Threshold Voltage

100mV steps				400mV steps		500mV steps		1V steps	
Suffix	VIT	Suffix	VIT	Suffix	VIT	Suffix	VIT	Suffix	VIT
01	800mV	70	7.0V	A0	10.4V	D0	20.5V	F0	31.0V
27	2.7V	71	7.1V	A1	10.8V	D1	21.0V	F1	32.0V
28	2.8V	72	7.2V	A2	11.2V	D2	21.5V	F2	33.0V
29	2.9V	73	7.3V	A3	11.6V	D3	22.0V	F3	34.0V
30	3.0V	74	7.4V	A4	12.0V	D4	22.5V	F4	35.0V
31	3.1V	75	7.5V	A5	12.4V	D5	23.0V	F5	36.0V
32	3.2V	76	7.6V	A6	12.8V	D6	23.5V		
33	3.3V	77	7.7V	A7	13.2V	D7	24.0V		
34	3.4V	78	7.8V	A8	13.6V	D8	24.5V		
35	3.5V	79	7.9V	A9	14.0V	D9	25.0V		
36	3.6V	80	8.0V	B0	14.4V	E0	25.5V		
37	3.7V	81	8.1V	B1	14.8V	E1	26.0V		
38	3.8V	82	8.2V	B2	15.2V	E2	26.5V		
39	3.9V	83	8.3V	B3	15.6V	E3	27.0V		
40	4.0V	84	8.4V	B4	16.0V	E4	27.5V		
41	4.1V	85	8.5V	B5	16.4V	E5	28.0V		
42	4.2V	86	8.6V	B6	16.8V	E6	28.5V		
43	4.3V	87	8.7V	B7	17.2V	E7	29.0V		
44	4.4V	88	8.8V	B8	17.6V	E8	29.5V		
45	4.5V	89	8.9V	B9	18.0V	E9	30.0V		
46	4.6V	90	9.0V	C0	18.4V				
47	4.7V	91	9.1V	C1	18.8V				
48	4.8V	92	9.2V	C2	19.2V				
49	4.9V	93	9.3V	C3	19.6V				
50	5.0V	94	9.4V	C4	20.0V				
51	5.1V	95	9.5V						
52	5.2V	96	9.6V						
53	5.3V	97	9.7V						
54	5.4V	98	9.8V						
55	5.5V	99	9.9V						
56	5.6V	00	10.0V						
57	5.7V								
58	5.8V								
59	5.9V								
60	6.0V								
61	6.1V								
62	6.2V								
63	6.3V								
64	6.4V								
65	6.5V								
66	6.6V								
67	6.7V								
68	6.8V								
69	6.9V								

Hysteresis

Suffix	CH1
2	2%
3	3%
4	4%
5	5%
6	6%
7	7%
8	8%
9	9%
A	10%
B	11%
C	12%
D	13%
E	0.5V
F	1V
G	1.5V
H	2V
I	2.5V

Package

Suffix	Name
DSK	WSON
DYY	SOT-23

Reel

Suffix	Name
R	Large

1. Sense logic: OV = overvoltage; UV = undervoltage
2. Reset topology: PP = Push-Pull; OD = Open-Drain
3. Reset logic: L = Active-Low; H = Active-High
4. A to I hysteresis options are only available for 2.7 V to 8 V threshold options

6 Pin Configuration and Functions

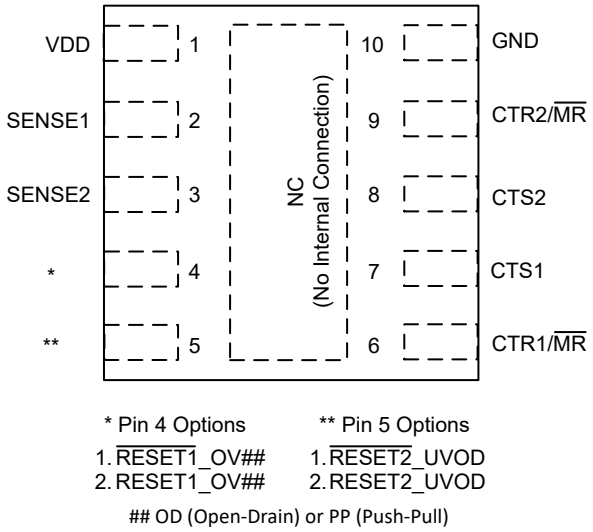

图 6-1. DSK Package, 10-Pin WSON, TPS37 (Top View)

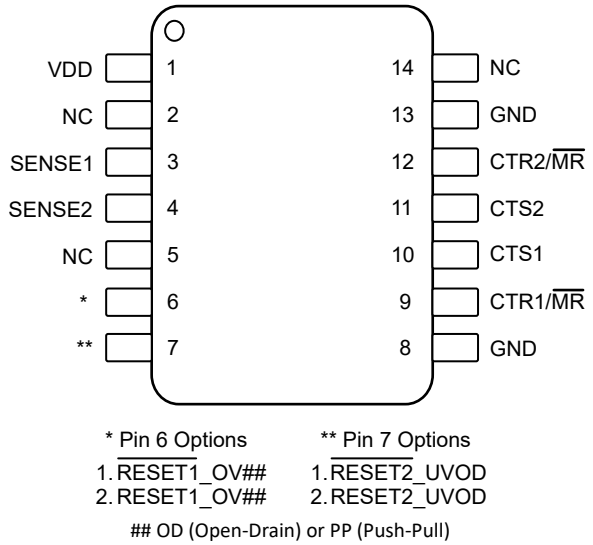

图 6-2. DYY Package, 14-Pin SOT-23, TPS37 (Top View)

Copyright © 2023 Texas Instruments Incorporated

表 6-1. Pin Functions

PIN NAME	WSON (DSK) PIN NUM.	SOT23 (DYY) PIN NUM.	I/O	DESCRIPTION
VDD	1	1	I	**Input Supply Voltage:** Bypass with a 0.1 µF capacitor to GND.
SENSE1	2	3	I	This pin is connected to the voltage that will be monitored for fixed variants or to a resistor divider for the adjustable variant. When the voltage on SENSE1 pin transitions above the upper threshold voltage of V_{IT+}, $\overline{RESET1}$/RESET1 asserts after the sense time delay, set by CTS1. When the voltage on the SENSE1 pin transitions below the upper threshold voltage of V_{IT+} - V_{HYS}, $\overline{RESET1}$/RESET1 deasserts after the reset time delay, set by CTR1. For noisy applications, placing a 10 nF to 100 nF ceramic capacitor close to this pin may be needed for optimum performance.
SENSE2	3	4	I	This pin is connected to the voltage that will be monitored for fixed variants or to a resistor divider for the adjustable variant. When the voltage on SENSE2 pin transitions below the lower threshold voltage of V_{IT-}, $\overline{RESET2}$/RESET2 asserts after the sense time delay, set by CTS2. When the voltage on the SENSE2 pin transitions above the lower threshold voltage of V_{IT-} + V_{HYS}, $\overline{RESET2}$/RESET2 deasserts after the reset time delay, set by CTR2. For noisy applications, placing a 10 nF to 100 nF ceramic capacitor close to this pin may be needed for optimum performance.
$\overline{RESET1}$/ RESET1	4	6	O	**Output Reset Signal For Channel 1:** See 节 5 for output topology options. $\overline{RESET1}$/RESET1 asserts when SENSE1 rises outside of the upper voltage threshold. $\overline{RESET1}$/RESET1 remains asserted for the reset time delay period after SENSE1 transitions out of an overvoltage (OV) fault condition. For active low open-drain reset output, an external pullup resistor is required. Do not place external pullup resistors on push-pull outputs. Reset output signal for: **SENSE1** Sensing Topology: **Overvoltage (OV)** Output topology: **Open Drain or Push Pull, Active Low or Active High**
$\overline{RESET2}$/ RESET2	5	7	O	**Output Reset Signal For Channel 2:** See 节 5 for output topology options. $\overline{RESET2}$/RESET2 asserts when SENSE2 falls outside of the lower voltage threshold. $\overline{RESET2}$/RESET2 remains asserted for the reset time delay period after SENSE2 transitions out of an undervoltage (UV) fault condition. For active low open-drain reset output, an external pullup resistor is required. Reset output signal for: **SENSE2** Sensing Topology: **Undervoltage (UV)** Output topology: **Open Drain, Active Low or Active High**
CTR1/ $\overline{MR}$	6	9	-	**Channel 1 RESET Time Delay:** User-programmable reset time delay for $\overline{RESET1}$/RESET1. Connect an external capacitor for adjustable time delay or leave the pin floating for the shortest delay. **Manual Reset:** If this pin is driven low, the $\overline{RESET1}$/RESET1 output will reset and become asserted. The pin can be left floating or be connected to a capacitor. This pin should not be driven high.
CTR2/ $\overline{MR}$	9	12	-	**Channel 2 RESET Time Delay:** User-programmable reset time delay for $\overline{RESET2}$/RESET2. Connect an external capacitor for adjustable time delay or leave the pin floating for the shortest delay. **Manual Reset:** If this pin is driven low, the $\overline{RESET2}$/RESET2 output will reset and become asserted. The pin can be left floating or be connected to a capacitor. This pin should not be driven high.
GND	10	8, 13	-	**Ground.** All GND pins must be electrically connected to the board ground.
NC	PAD	2, 5, 14	-	The PAD for the **DSK** package is not internally connected, the PAD can be connected to GND or be left floating. For the **DYY** package, NC stands for “No Connect”. The pins are to be left floating.
CTS1	7	10	O	**Channel 1 SENSE Time Delay:** Capacitor programmable sense delay: CTS1 pin offers a user-adjustable sense delay time when asserting a reset condition. Connecting this pin to a ground-referenced capacitor sets the $\overline{RESET1}$/RESET1 delay time to assert.
CTS2	8	11	O	**Channel 2 SENSE Time Delay:** Capacitor programmable sense delay: CTS2 pin offers a user-adjustable sense delay time when asserting a reset condition. Connecting this pin to a ground-referenced capacitor sets the $\overline{RESET2}$/RESET2 delay time to assert.

Copyright © 2023 Texas Instruments Incorporated

7 Specifications

7.1 Absolute Maximum Ratings

over operating free-air temperature range, unless otherwise noted [(1)]

		MIN	MAX	UNIT
Voltage	VDD, V_{SENSE1},V_{SENSE2}, V_{RESET1}, V_{RESET2}, $V_{\overline{RESET1}}$, $V_{\overline{RESET2}}$	– 0.3	70	V
Voltage	V_{CTS1}, V_{CTS2}, V_{CTR1}, V_{CTR2}	– 0.3	6	V
Current	I_{RESET1}, I_{RESET2}, $I_{\overline{RESET1}}$, $I_{\overline{RESET2}}$		10	mA
Temperature [(2)]	Operating junction temperature, T_J	– 40	150	°C
Temperature [(2)]	Operating Ambient temperature, T_A	– 40	150	°C
Temperature [(2)]	Storage, T_{stg}	– 65	150	°C

(1) Stresses beyond those listed under Absolute Maximum Ratings may cause permanent damage to the device. These are stress ratings only, which do not imply functional operation of the device at these or any other conditions beyond those indicated under Recommended Operating Conditions. Exposure to absolute-maximum-rated conditions for extended periods may affect device reliability.
(2) As a result of the low dissipated power in this device, it is assumed that $T_J = T_A$.

7.2 ESD Ratings

			VALUE	UNIT
$V_{(ESD)}$	Electrostatic discharge	Human body model (HBM), per ANSI/ESDA/JEDEC JS-001 [(1)]	± 2000	V
		Charged device model (CDM), per JEDEC specification JESD22-C101 [(2)]	± 750	

(1) JEDEC document JEP155 states that 500-V HBM allows safe manufacturing with a standard ESD control process.
(2) JEDEC document JEP157 states that 250-V CDM allows safe manufacturing with a standard ESD control process.

7.3 Recommended Operating Conditions

over operating free-air temperature range (unless otherwise noted)

		MIN	NOM	MAX	UNIT
Voltage	V_{DD}	2.7		65	V
Voltage	V_{SENSE1},V_{SENSE2}, V_{RESET1}, V_{RESET2}, $V_{\overline{RESET1}}$, $V_{\overline{RESET2}}$	0		65	V
Voltage	V_{CTS1}, V_{CTS2}, V_{CTR1}, V_{CTR2}	0		5.5	V
Current	I_{RESET1}, I_{RESET2}, $I_{\overline{RESET1}}$, $I_{\overline{RESET2}}$	0		±5	mA
T_J	Junction temperature (free air temperature)	– 40		125	°C

7.4 Thermal Information

THERMAL METRIC [(1)]		TPS37		UNIT
		DSK	DYY	
		10-PIN	14-PIN	
$R_{\theta JA}$	Junction-to-ambient thermal resistance	87.4	131.5	°C/W
$R_{\theta JC(top)}$	Junction-to-case (top) thermal resistance	76.3	61.1	°C/W
$R_{\theta JB}$	Junction-to-board thermal resistance	54.2	56.6	°C/W
ψ_{JT}	Junction-to-top characterization parameter	4.8	3.4	°C/W
ψ_{JB}	Junction-to-board characterization parameter	54.2	56.5	°C/W
$R_{\theta JC(bot)}$	Junction-to-case (bottom) thermal resistance	34.8	N/A	°C/W

(1) For more information about traditional and new thermal metrics, see the Semiconductor and IC Package Thermal Metrics application report.

Copyright © 2023 Texas Instruments Incorporated

7.5 Electrical Characteristics

At $V_{DD(MIN)} \leqslant V_{DD} \leqslant V_{DD\ (MAX)}$, CTR1/$\overline{MR}$ = CTR2/$\overline{MR}$ = CTS1 = CTS2 = open, output reset pull-up resistor R_{PU} = 10 kΩ, voltage V_{PU} = 5.5 V, and load C_{LOAD} = 10 pF. The operating free-air temperature range T_A = – 40°C to 125°C, unless otherwise noted. Typical values are at T_A = 25°C and VDD = 16 V and V_{IT} = 6.5 V (V_{IT} refers to V_{ITN} or V_{ITP}).

PARAMETER		TEST CONDITIONS	MIN	TYP	MAX	UNIT
VDD						
V_{DD}	Supply Voltage		2.7		65	V
UVLO [(1)]	Undervoltage Lockout	V_{DD} Falling below $V_{DD\ (MIN)}$			2.7	V
V_{POR}	Power on Reset Voltage [(2)] $\overline{RESET}$, Active Low (Open-Drain, Push-Pull)	$V_{OL(MAX)}$ = 300 mV $I_{OUT\ (Sink)}$ = 15 µA			1.4	V
V_{POR}	Power on Reset Voltage [(2)] RESET, Active High (Push-Pull)	$V_{OH(MIN)}$ = 0.8 x V_{DD} $I_{OUT\ (Source)}$ = 15 µA			1.4	V
I_{DD}	Supply current into VDD pin	V_{IT} = 800 mV $V_{DD\ (MIN)} \leqslant V_{DD} \leqslant V_{DD\ (MAX)}$		1	2.6	µA
		V_{IT} = 2.7 V to 36 V $V_{DD\ (MIN)} \leqslant V_{DD} \leqslant V_{DD\ (MAX)}$		1	2	µA
SENSE (Input)						
I_{SENSE}	Input current (SENSE1, SENSE2)	V_{IT} = 800 mV			100	nA
I_{SENSE}	Input current (SENSE1, SENSE2)	V_{IT} < 10 V			0.8	µA
I_{SENSE}	Input current (SENSE1, SENSE2)	10 V < V_{IT} < 26 V			1.2	µA
I_{SENSE}	Input current (SENSE1, SENSE2)	V_{IT} > 26 V			2	µA
V_{ITN}	Input Threshold Negative (Undervoltage)	V_{IT} = 2.7 V to 36 V	-1.5		1.5	%
		V_{IT} = 800 mV [(3)]	0.792	0.800	0.808	V
V_{ITP}	Input Threshold Positive (Overvoltage)	V_{IT} = 2.7 V to 36 V	-1.5		1.5	%
		V_{IT} = 800 mV [(3)]	0.792	0.800	0.808	V
V_{HYS}	Hysteresis Accuracy [(4)]	V_{IT} = 0.8 V and 2.7 V to 36 V V_{HYS} Range = 2% to 13% (1% step)	-1.5		1.5	%
		V_{IT} = 2.7 V to 8 V V_{HYS} = 0.5 V, 1 V, 1.5 V, 2 V, 2.5 V (V_{ITP} - V_{HYS}) ⩾ 2.4 V, OV Only	-1.5		1.5	%
RESET (Output)						
$I_{lkg(OD)}$	Open-Drain leakage (RESET1, RESET2)	V_{RESET} = 5.5 V V_{ITN} < V_{SENSE} < V_{ITP}			300	nA
		V_{RESET} = 65 V V_{ITN} < V_{SENSE} < V_{ITP}			300	nA
V_{OL} [(5)]	Low level output voltage	2.7 V ⩽ VDD ⩽ 65 V I_{RESET} = 5 mA			300	mV
V_{OH_DO}	High level output voltage dropout (V_{DD} - V_{OH} = V_{OH_DO}) (Push-Pull only)	2.7 V ⩽ VDD ⩽ 65 V I_{RESET} = 500 uA			100	mV
V_{OH} [(5)]	High level output voltage (Push-Pull only)	2.7 V ⩽ VDD ⩽ 65 V I_{RESET} = 5 mA	0.8V_{DD}			V

7.5 Electrical Characteristics (continued)

At $V_{DD(MIN)} \leqslant V_{DD} \leqslant V_{DD\ (MAX)}$, CTR1/$\overline{MR}$ = CTR2/$\overline{MR}$ = CTS1 = CTS2 = open, output reset pull-up resistor R_{PU} = 10 kΩ, voltage V_{PU} = 5.5 V, and load C_{LOAD} = 10 pF. The operating free-air temperature range T_A = – 40°C to 125°C, unless otherwise noted. Typical values are at T_A = 25°C and VDD = 16 V and V_{IT} = 6.5 V (V_{IT} refers to V_{ITN} or V_{ITP}).

PARAMETER		TEST CONDITIONS	MIN	TYP	MAX	UNIT
Capacitor Timing (CTS, CTR)						
R_{CTR}	Internal resistance (CTR1 / $\overline{MR}$, CTR2 / $\overline{MR}$)		877	1000	1147	Kohms
R_{CTS}	Internal resistance (C_{TS1}, C_{TS2})		88	100	122	Kohms
Manual Reset ($\overline{MR}$)						
$V_{\overline{MR}_IH}$	CTR1 / $\overline{MR}$ and CTR2 / $\overline{MR}$ pin logic high input	VDD = 2.7 V	2200			mV
$V_{\overline{MR}_IH}$	CTR1 / $\overline{MR}$ and CTR2 / $\overline{MR}$ pin logic high input	VDD = 65 V	2500			mV
$V_{\overline{MR}_IL}$	CTR1 / $\overline{MR}$ and CTR2 / $\overline{MR}$ pin logic low input	VDD = 2.7 V			1300	mV
$V_{\overline{MR}_IL}$	CTR1 / $\overline{MR}$ and CTR2 / $\overline{MR}$ pin logic low input	VDD = 65 V			1300	mV

(1) When V_{DD} voltage falls below UVLO, reset is asserted for Output 1 and Output 2. V_{DD} slew rate ⩽ 100 mV / µs
(2) V_{POR} is the minimum V_{DD} voltage for a controlled output state. Below VPOR, the output cannot be determined. V_{DD} dv/dt ⩽ 100mV/µs
(3) For adjustable voltage guidelines and resistor selection refer to **Adjustable Voltage Thresholds** in **Application and Implementation section**
(4) Hysteresis is with respect to V_{ITP} and V_{ITN} voltage threshold. V_{ITP} has negative hysteresis and V_{ITN} has positive hysteresis.
(5) For V_{OH} and V_{OL} relation to output variants refer to **Timing Figures after the Timing Requirement Table**

Copyright © 2023 Texas Instruments Incorporated

7.6 Timing Requirements

At $V_{DD(MIN)} \leqslant V_{DD} \leqslant V_{DD\ (MAX)}$, CTR1/$\overline{MR}$ = CTR2/$\overline{MR}$ = CTS1 = CTS2 = open [(1)], output reset pull-up resistor R_{PU} = 10 kΩ, voltage V_{PU} = 5.5V, and C_{LOAD} = 10 pF. VDD and SENSE slew rate = 1V / µs. The operating free-air temperature range T_A = – 40°C to 125°C, unless otherwise noted. Typical values are at T_A = 25°C and VDD = 16 V and V_{IT} = 6.5 V (V_{IT} refers to either V_{ITN} or V_{ITP}).

PARAMETER		TEST CONDITIONS	MIN	TYP	MAX	UNIT
Common timing parameters						
t_{CTR}	Reset release time delay (CTR1/$\overline{MR}$, CTR2/$\overline{MR}$) [(2)]	VIT = 2.7 V to 36 V C_{CTR1} = C_{CTR2} = Open 20% Overdrive from Hysteresis			100	µs
		VIT = 800 mV C_{CTR1} = C_{CTR2} = Open 20% Overdrive from Hysteresis			40	µs
t_{CTS}	Sense detect time delay (CTS1, CTS2) [(3)]	VIT = 2.7 V to 36 V C_{CTS1} = C_{CTS2} = Open 20% Overdrive from V_{IT}		34	90	µs
		VIT = 800 mV C_{CTS1} = C_{CTS2} = Open 20% Overdrive from V_{IT}		8	17	µs
t_{SD}	Startup Delay [(4)]	$C_{CTR1/\overline{MR}}$ = $C_{CTR2/\overline{MR}}$ = Open			2	ms

(1) C_{CTR1} = Reset delay channel 1, C_{CTR2} = Reset delay channel 2,
C_{CTS1} = Sense delay channel 1, C_{CTS2} = Sense delay channel 2

(2) **CTR Reset detect time delay:**
Overvoltage active-LOW output is measure from $V_{ITP\ -\ HYS}$ to V_{OH}
Undervoltage active-LOW output is measure from $V_{ITN\ +\ HYS}$ to V_{OH}
Overvoltage active-HIGH output is measure from $V_{ITP\ -\ HYS}$ to V_{OL}
Undervoltage active-HIGH output is measure from $V_{ITN\ +\ HYS}$ to V_{OL}

(3) **CTS Sense detect time delay:**
Active-low output is measure from V_{IT} to V_{OL} (or V_{Pullup})
Active-high output is measured from V_{IT} to V_{OH}
V_{IT} refers to either V_{ITN} or V_{ITP}

(4) During the power-on sequence, VDD must be at or above $V_{DD\ (MIN)}$ for at least t_{SD} before the output is in the correct state based on V_{SENSE}.
t_{SD} time includes the propagation delay (C_{CTR1} = C_{CTR2} = Open). Capaicitor in C_{CTR1} or C_{CTR2} will add time to t_{SD}.

7.7 Timing Diagrams

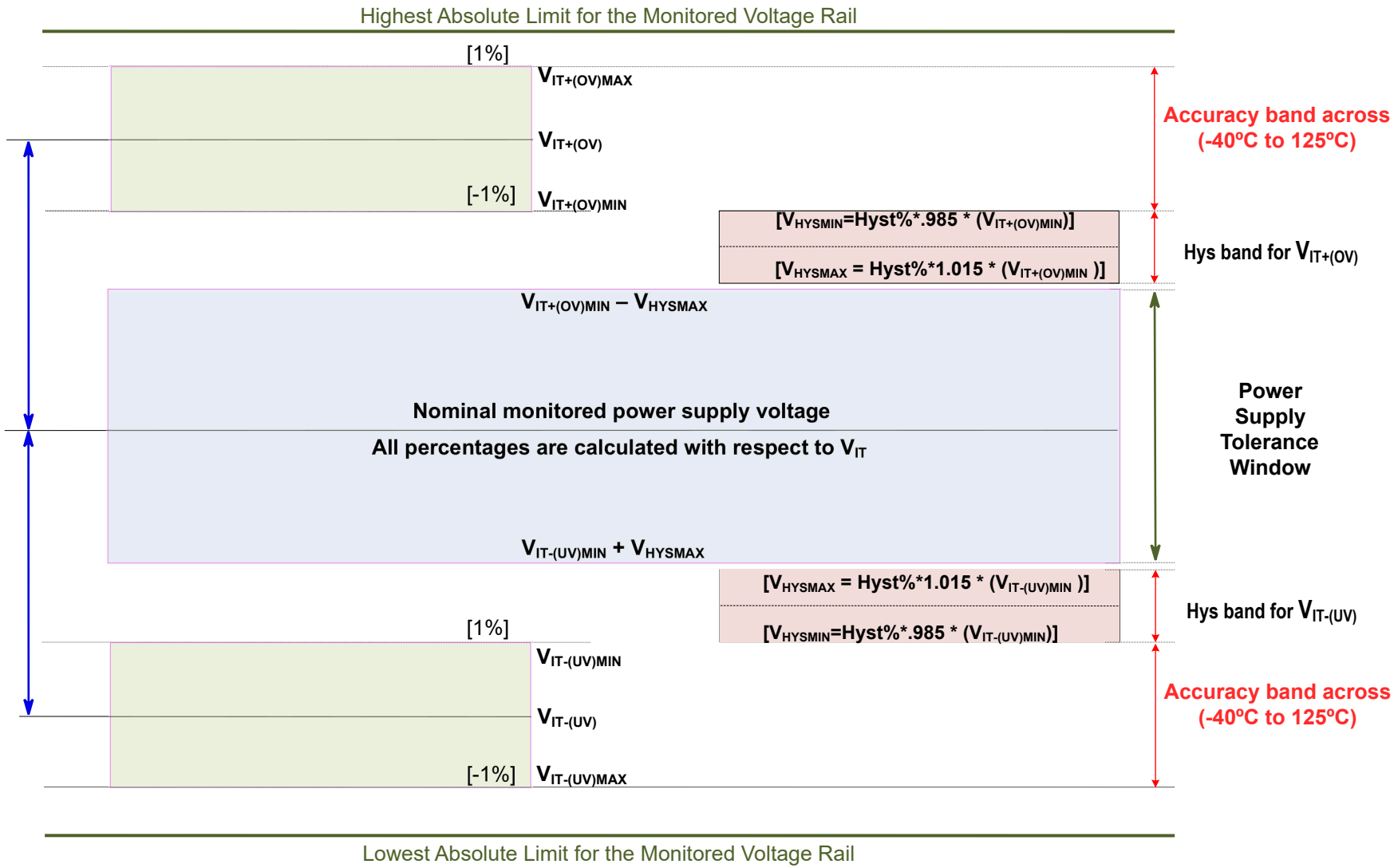

图 7-1. Voltage Threshold and Hysteresis Accuracy

Copyright © 2023 Texas Instruments Incorporated

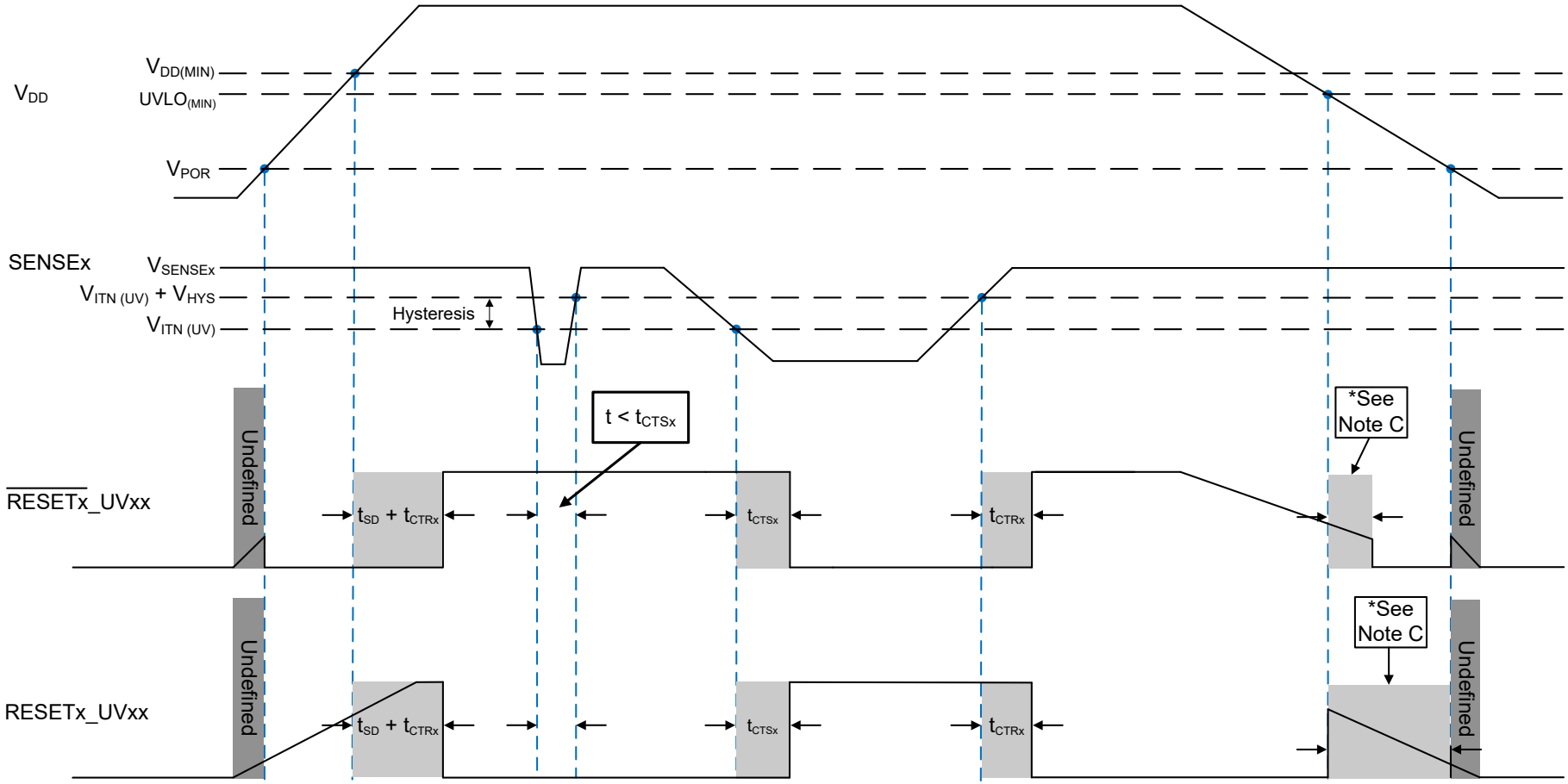

A. For open-drain output option, the timing diagram assumes the $\overline{\text{RESET}}$x_UVOD / RESETx_UVOD pin is connected via an external pull-up resistor to VDD.
B. Be advised that this diagram shows the VDD falling slew rate is slow or the VDD decay time is much larger than the propagation detect delay (t_{CTRx}) time.
C. $\overline{\text{RESET}}$x_UVxx / RESETx_UVxx is asserted when VDD goes below the $UVLO_{(MIN)}$ threshold after the time delay, t_{CTRx}, is reached.

图 7-2. SENSEx Undervoltage (UV) Timing Diagram

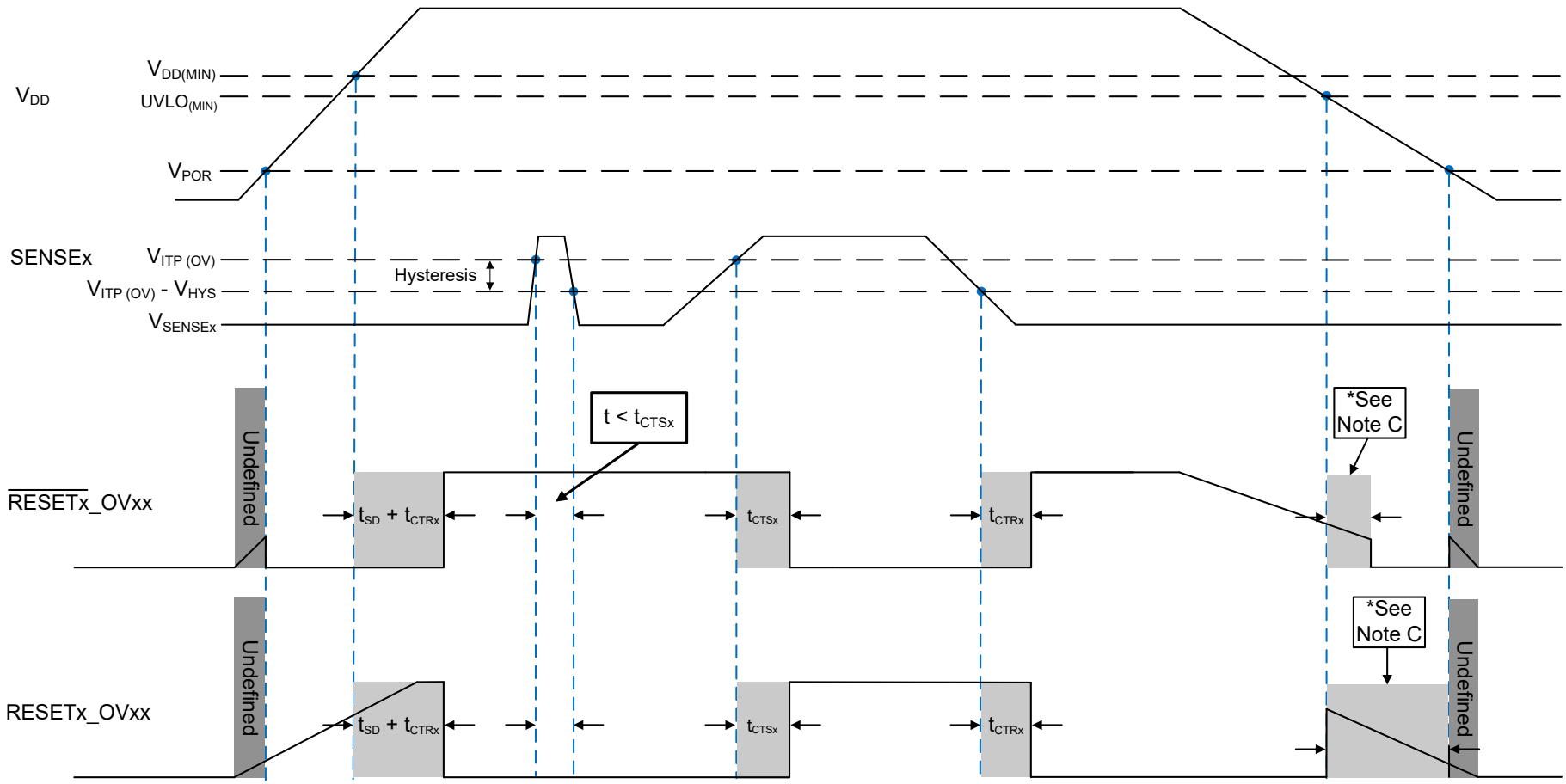

A. For open-drain output option, the timing diagram assumes the $\overline{\text{RESET}}$x_OVOD / RESETx_OVOD pin is connected via an external pull-up resistor to VDD.
B. Be advised that this diagram shows the VDD falling slew rate is slow or the VDD decay time is much larger than the propagation detect delay (t_{CTRx}) time.
C. $\overline{\text{RESET}}$x_OVxx / RESETx_OVxx is asserted when VDD goes below the $UVLO_{(MIN)}$ threshold after the time delay, t_{CTRx}, is reached.

图 7-3. SENSEx Overvoltage (OV) Timing Diagram

Copyright © 2023 Texas Instruments Incorporated

7.8 Typical Characteristics

Typical characteristics show the typical performance of the TPS37 device. Test conditions are T_A = 25°C, R_{PU} = 100 kΩ, C_{Load} = 50 pF, unless otherwise noted.

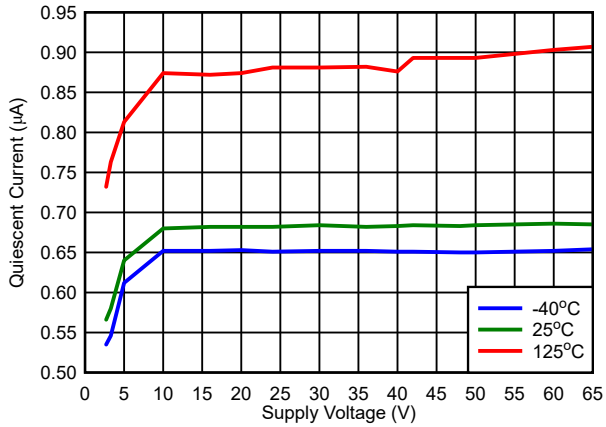

$\overline{RESET}$ = High, V_{IT} = 2.7 V

图 7-4. V_{DD} vs I_{DD} ($\overline{RESET}$ = High, V_{IT} = 2.7 V)

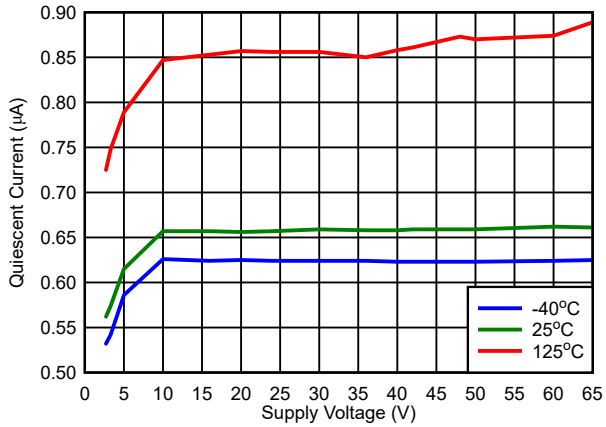

$\overline{RESET}$ = Low, V_{IT} = 2.7 V

图 7-5. V_{DD} vs I_{DD} ($\overline{RESET}$ = Low, V_{IT} = 2.7 V)

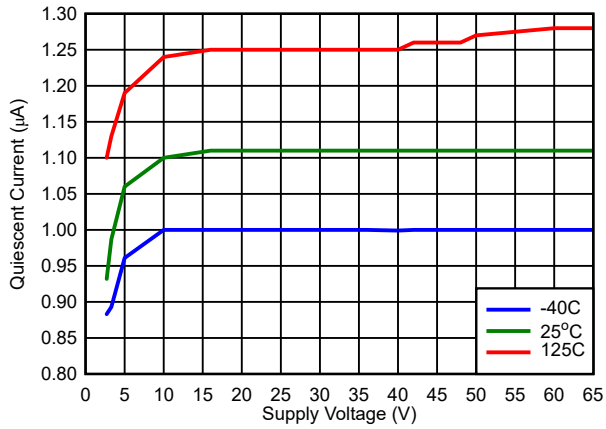

$\overline{RESET}$ = High, V_{IT} = 0.8 V

图 7-6. V_{DD} vs I_{DD} ($\overline{RESET}$ = High, V_{IT} = 0.8 V)

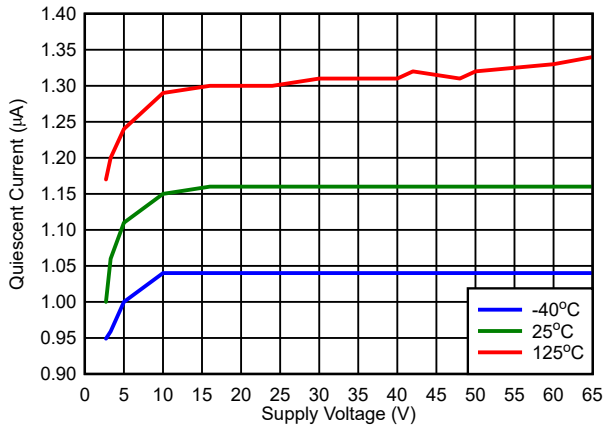

$\overline{RESET}$ = Low, V_{IT} = 0.8 V

图 7-7. V_{DD} vs I_{DD} ($\overline{RESET}$ = Low, V_{IT} = 0.8 V)

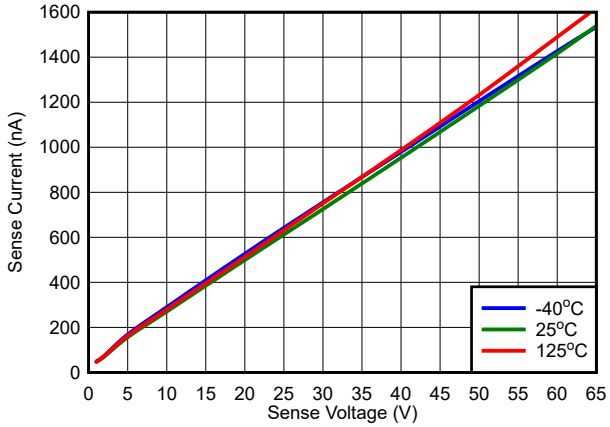

V_{DD} = 2.7 V

图 7-8. V_{SENSE} vs I_{SENSE}

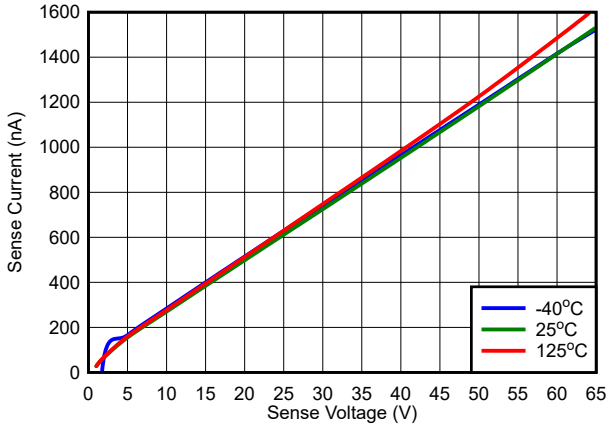

V_{DD} = 65 V

图 7-9. V_{SENSE} vs I_{SENSE}

7.8 Typical Characteristics (continued)

Typical characteristics show the typical performance of the TPS37 device. Test conditions are T_A = 25°C, R_{PU} = 100 kΩ, C_{Load} = 50 pF, unless otherwise noted.

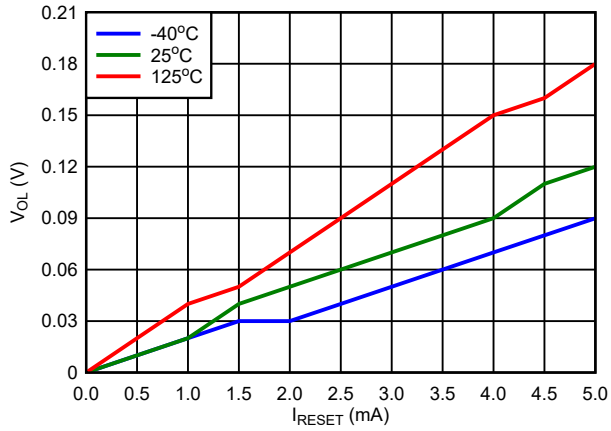

V_{DD} = 2.7 V

图 7-10. Open-Drain Active Low V_{OL} vs I_{RESET}

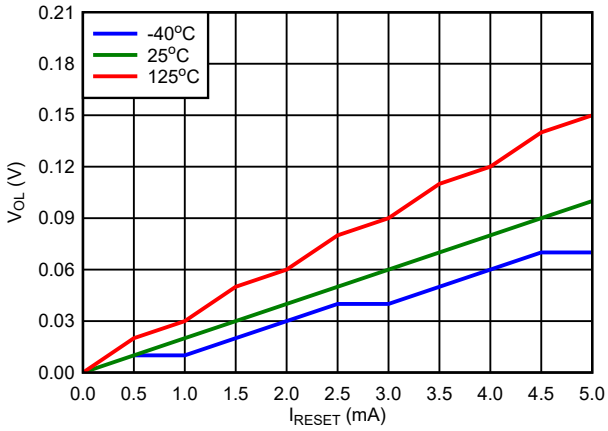

V_{DD} = 65 V

图 7-11. Open-Drain Active Low V_{OL} vs I_{RESET}

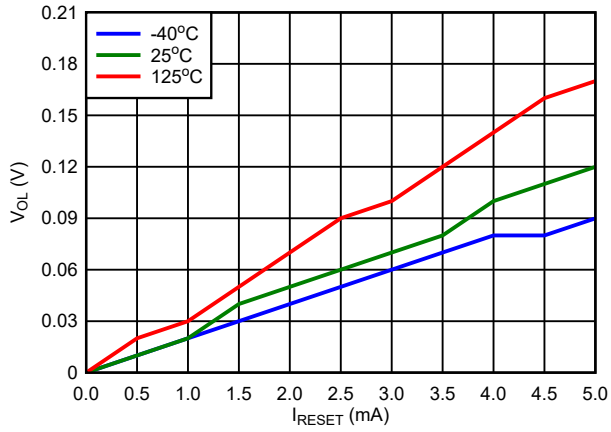

V_{DD} = 2.7 V

图 7-12. Open-Drain Active High V_{OL} vs I_{RESET}

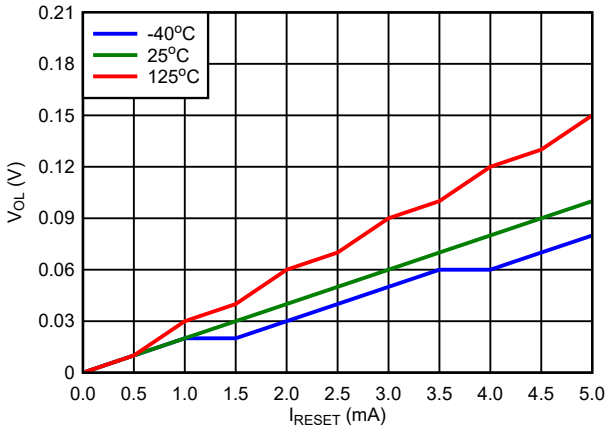

V_{DD} = 65 V

图 7-13. Open-Drain Active High V_{OL} vs I_{RESET}

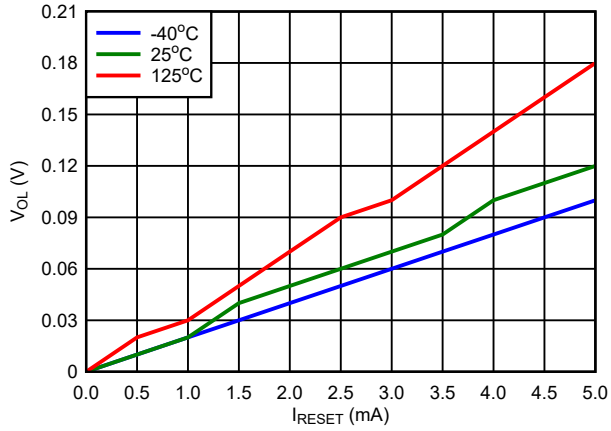

V_{DD} = 2.7 V

图 7-14. Push-Pull Active High V_{OL} vs I_{RESET}

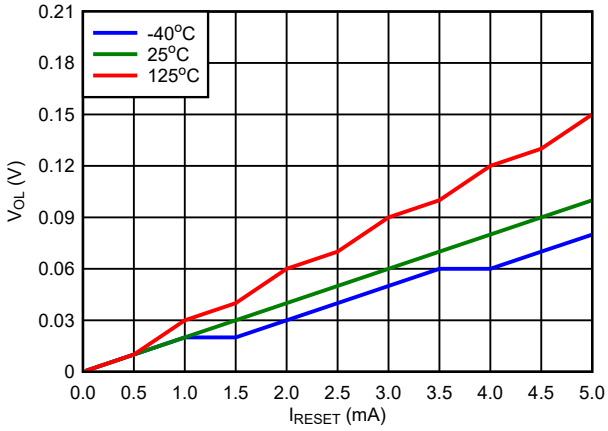

V_{DD} = 65 V

图 7-15. Push-Pull Active High V_{OL} vs I_{RESET}

Copyright © 2023 Texas Instruments Incorporated

7.8 Typical Characteristics (continued)

Typical characteristics show the typical performance of the TPS37 device. Test conditions are T_A = 25°C, R_{PU} = 100 kΩ, C_{Load} = 50 pF, unless otherwise noted.

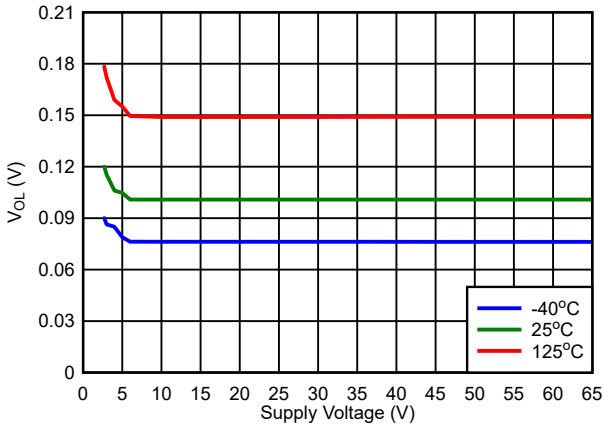

图 7-16. Open-Drain Active Low V_{OL} vs V_{DD}

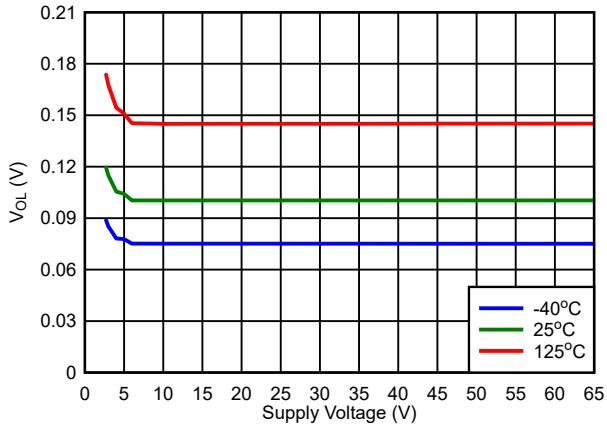

图 7-17. Open-Drain Active High V_{OL} vs V_{DD}

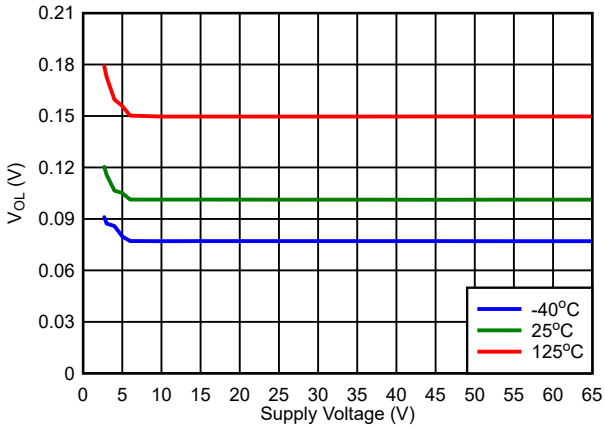

图 7-18. Push-Pull Active Low V_{OL} vs V_{DD}

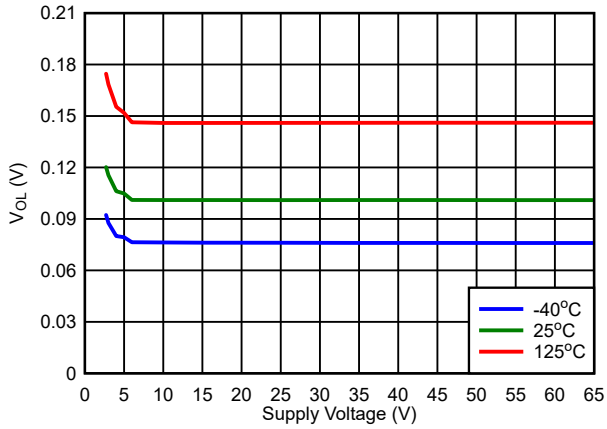

图 7-19. Push-Pull Active High V_{OL} vs V_{DD}

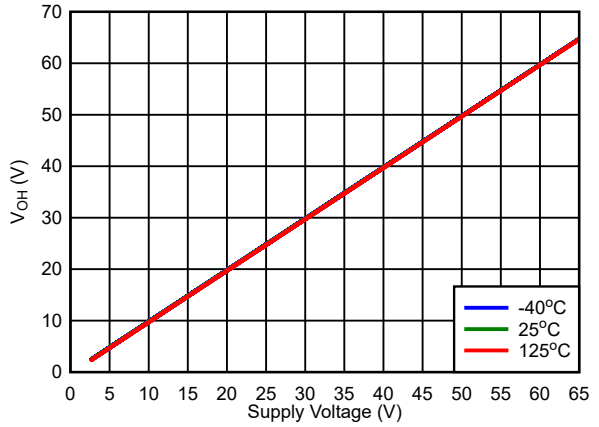

图 7-20. Push-Pull Active Low V_{OH} vs V_{DD}

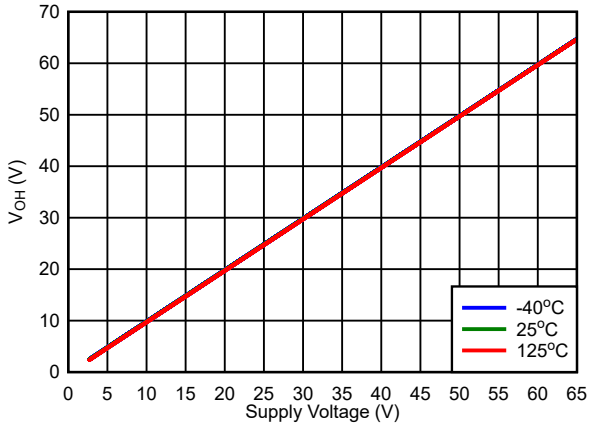

图 7-21. Push-Pull Active High V_{OH} vs V_{DD}

Copyright © 2023 Texas Instruments Incorporated

7.8 Typical Characteristics (continued)

Typical characteristics show the typical performance of the TPS37 device. Test conditions are T_A = 25°C, R_{PU} = 100 kΩ, C_{Load} = 50 pF, unless otherwise noted.

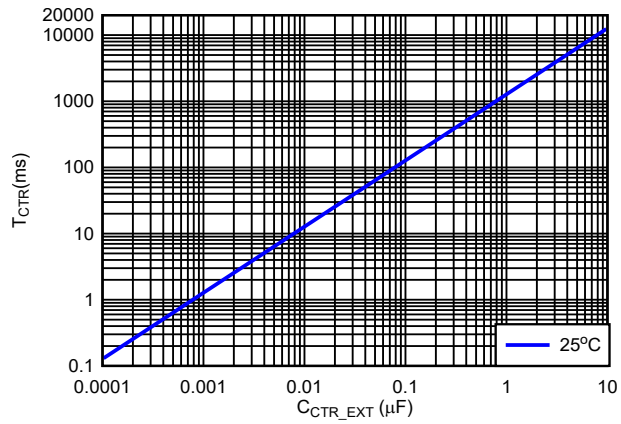

图 7-22. T_{CTR} vs C_{CTR}

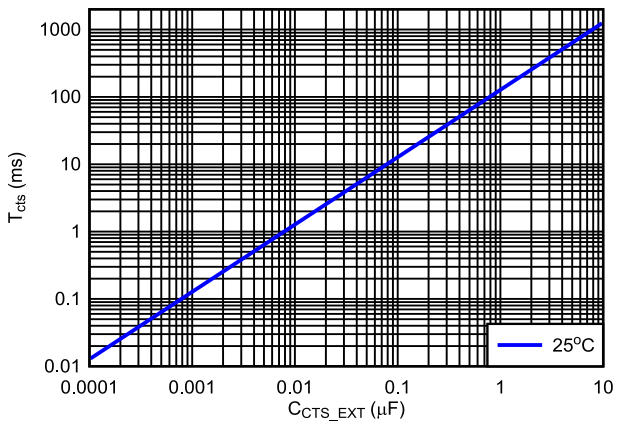

图 7-23. T_{CTS} vs C_{CTS}

Copyright © 2023 Texas Instruments Incorporated

8 Detailed Description

8.1 Overview

The TPS37 is a family of high voltage and low quiescent current reset IC with fixed threshold voltage. Voltage divider is integrated to eliminate the need for external resistors and eliminate leakage current that comes with resistor dividers. However, it can also support external resistor if required by application, the lowest threshold 800 mV (bypass internal resistor ladder) is recommenced for external resistors use case to take advantage of faster detection time and lower I_{SENSE} current.

VDD, SENSE and RESET pins can support 65 V continuous operation; both VDD and SENSE voltage levels can be independent of each other, meaning VDD pin can be connected at 2.7 V while SENSE pins are connected to a higher voltage. One thing of note, the TPS37 does not have clamps within the device so external circuits or devices must be added to limit the voltages to the absolute max limit.

Additional features include programmable sense time delay (CTS1, CTS2) and reset delay time and manual reset (CTR1 / $\overline{MR}$, CTR2 / $\overline{MR}$).

8.2 Functional Block Diagram

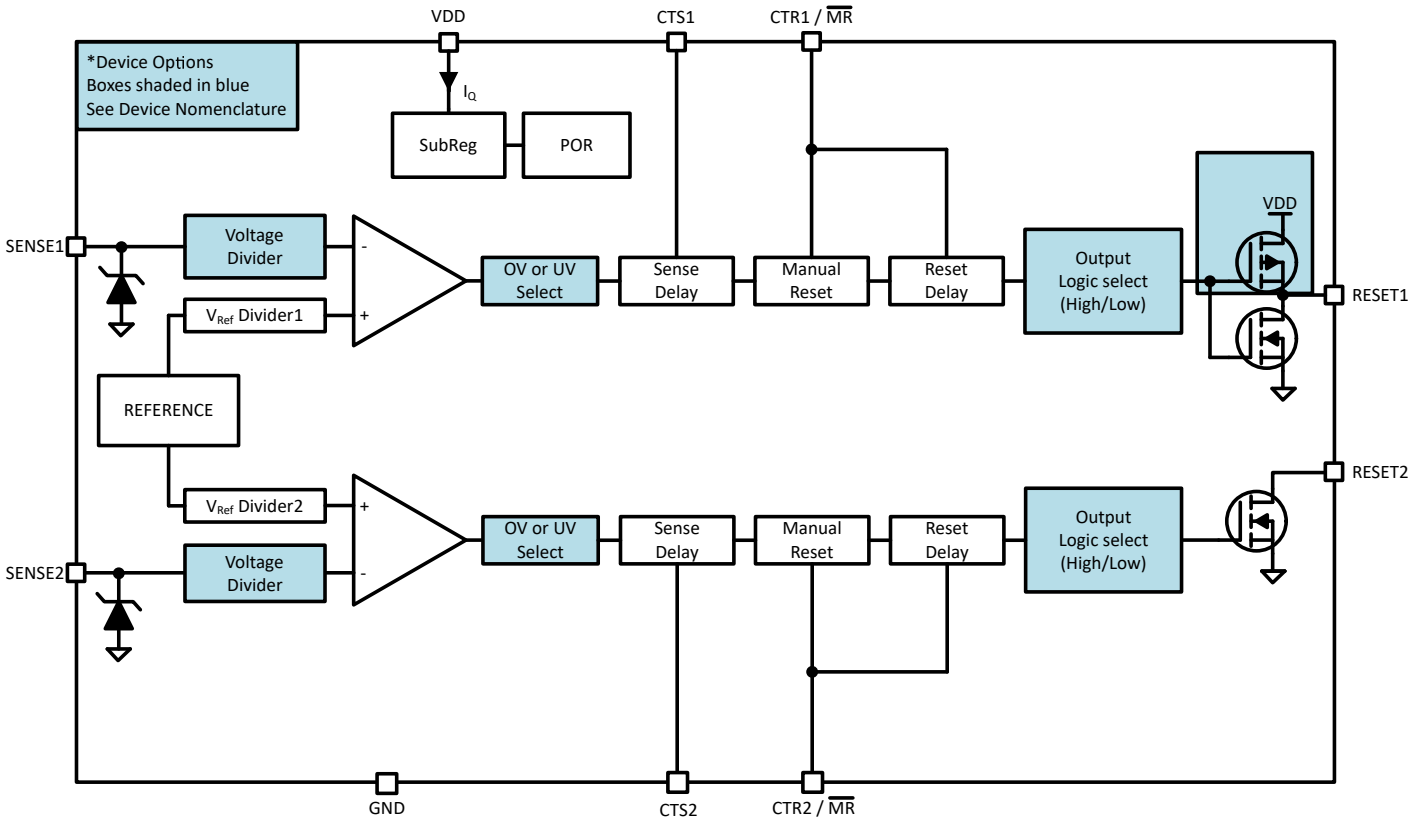

图 8-1. Functional Block Diagram [1]

[1] Refer to 节 5 for complete list of topologies and output logic combination

8.3 Feature Description

8.3.1 Input Voltage (VDD)

VDD operating voltage ranges from 2.7 V to 65 V. An input supply capacitor is not required for this device; however, if the input supply is noisy good analog practice is to place a 0.1 µF capacitor between the VDD and GND.

VDD needs to be at or above $V_{DD(MIN)}$ for at least the start-up time delay (t_{SD}) for the device to be fully functional.

VDD voltage is independent of V_{SENSE} and V_{RESET}, meaning that VDD can be higher or lower than the other pins.

8.3.1.1 Undervoltage Lockout (V_{POR} < V_{DD} < UVLO)

When the voltage on VDD is less than the UVLO voltage, but greater than the power-on reset voltage (V_{POR}), the output pins will be in reset, regardless of the voltage at SENSE pins.

8.3.1.2 Power-On Reset (V_{DD} < V_{POR})

When the voltage on VDD is lower than the power on reset voltage (V_{POR}), the output signal is undefined and is not to be relied upon for proper device function.

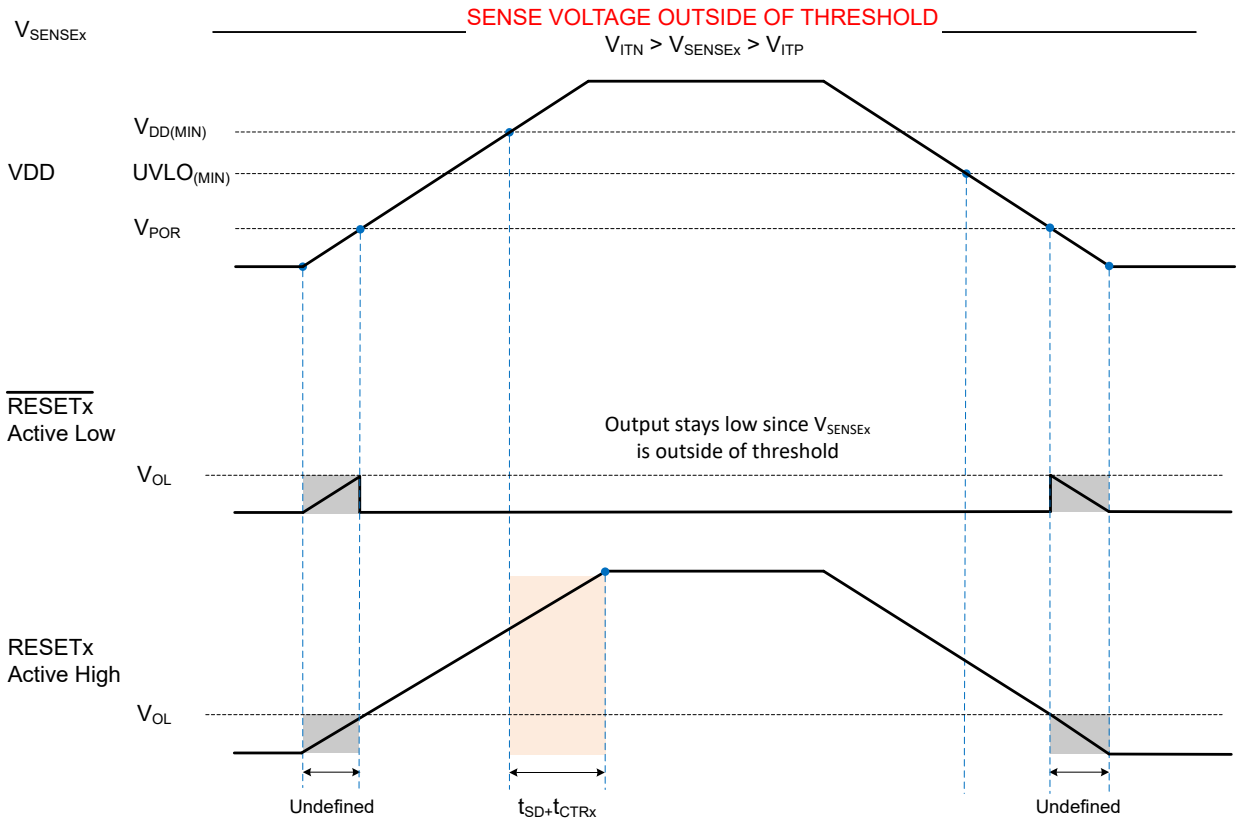

图 8-2. Power Cycle (SENSE Outside of Nominal voltage) [2]

[2] Figure assumes an external pull-up resistor is connected to the reset pin via VDD

Copyright © 2023 Texas Instruments Incorporated

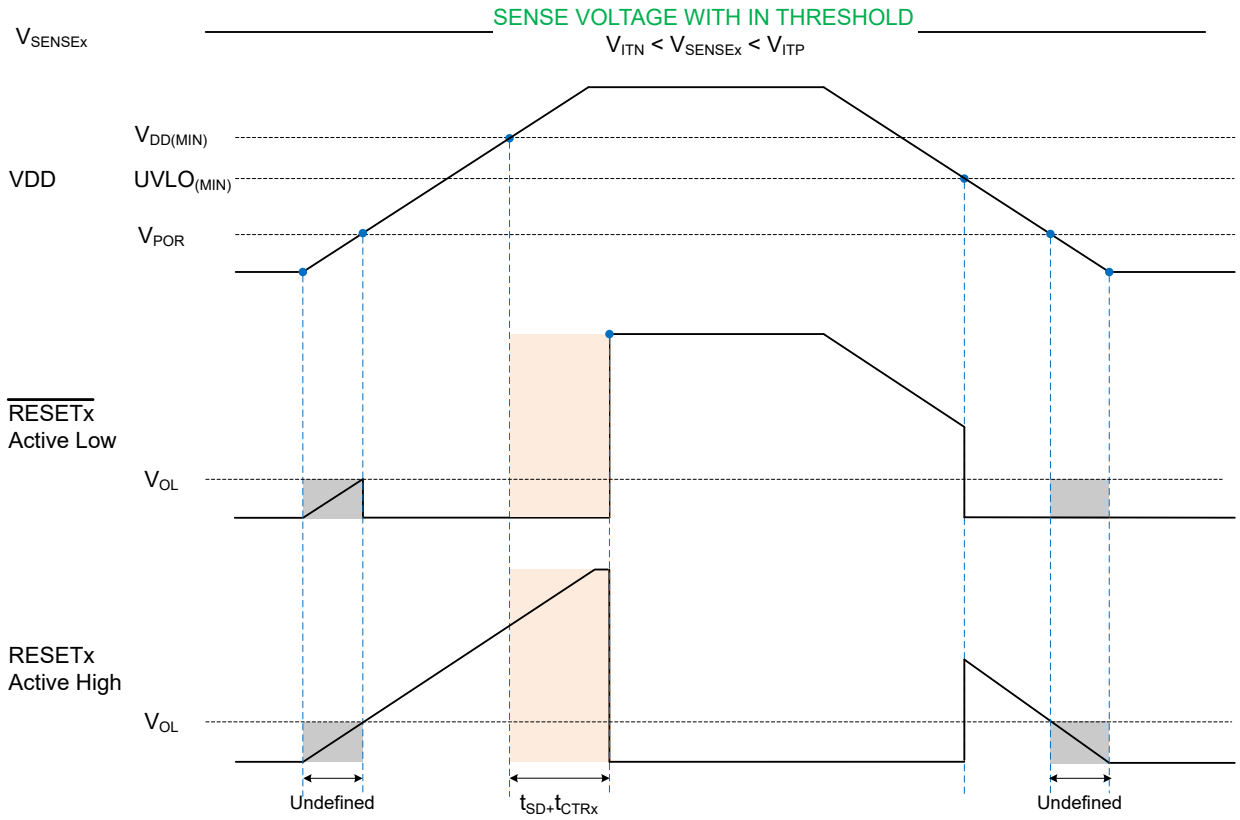

图 8-3. Power Cycle (SENSE Within Nominal voltage) [3]

[3] Figure assumes an external pull-up resistor is connected to the reset pin via VDD

8.3.2 SENSE

The TPS37 high voltage family integrates two voltage comparators, a precision reference voltage and trimmed resistor divider. This configuration optimizes device accuracy because all resistor tolerances are accounted for in the accuracy and performance specifications. Device also has built-in hysteresis that provides noise immunity and ensures stable operation.

Channels are independent of each other, meaning that SENSE1 and SENSE2 and respective outputs can be connected to different voltage rails.

Although not required in most cases, for noisy applications good analog design practice is to place a 10 nF to 100 nF bypass capacitor at the SENSEx inputs in order to reduce sensitivity to transient voltages on the monitored signal. SENSE1 and SENSE2 pins can be connected directly to VDD pin.

8.3.2.1 SENSE Hysteresis

Built-in hysteresis to avoid erroneous output reset release. The hysteresis is opposite to the threshold voltage; for overvoltage options the hysteresis is subtracted from the positive threshold (V_{ITP}), for undervoltage options hysteresis is added to the negative threshold (V_{ITN}).

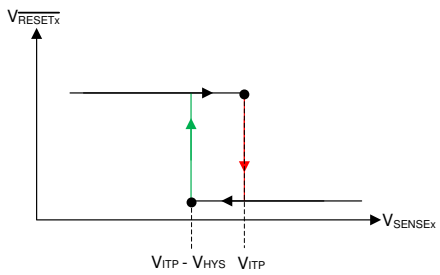

图 8-4. Hysteresis (Overvoltage Active-Low)

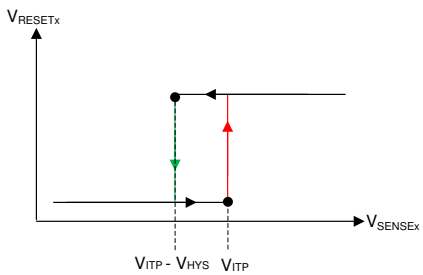

图 8-5. Hysteresis (Overvoltage Active-High)

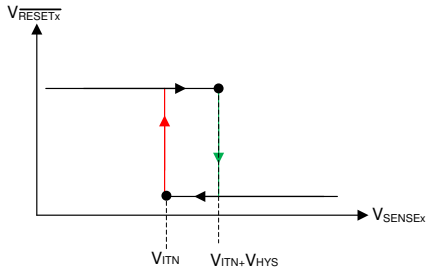

图 8-6. Hysteresis (Undervoltage Active-High)

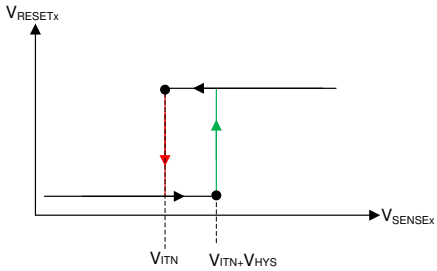

图 8-7. Hysteresis (Undervoltage Active-Low)

Copyright © 2023 Texas Instruments Incorporated

表 8-1. Common Hysteresis Lookup Table

TARGET			DEVICE ACTUAL HYSTERESIS OPTION
DETECT THRESHOLD	TOPOLOGY	RELEASE VOLTAGE (V)	
18.0 V	Overvoltage	17.5 V	-3%
18.0 V	Overvoltage	16.0 V	-11%
17.0 V	Overvoltage	16.5 V	-3%
16.0 V	Overvoltage	15.0 V	-6%
15.0 V	Overvoltage	14.0 V	-7%
6.0 V	Undervoltage	6.5 V	0.5 V
5.5 V	Undervoltage	6 V	0.5 V
8 V	Undervoltage	9 V	1 V
5 V	Undervoltage	7.5 V	2.5 V

表 8-1 shows a sample of hysteresis and voltage options for the TPS37. For threshold voltages ranging from 2.7 V to 8 V, one option is to select a fixed hysteresis value ranging from 0.5 V to 2.5 V in increments of 0.5 V. Additionally, a second option can be selected where the hysteresis value is a percentage of the threshold voltage. The percentage of voltage hysteresis ranges from 2% to 13%.

Knowing the amount of hysteresis voltage, the release voltage for the undervoltage (UV) channel is ($V_{ITN(UV)}$ + V_{HYS}) and for the overvoltage (OV) channel is ($V_{ITP(OV)}$ - V_{HYS}). For a visual understanding of the UV and OV release voltage, see SENSEx Undervoltage (UV) Timing Diagram and SENSEx Overvoltage (OV) Timing Diagram. The accuracy of the release voltage, or stated in the 节 7.5 as *Hysteresis Accuracy* is ±1.5%. Expanding what is shown in 表 8-1, below are a few voltage hysteresis examples that include the hysteresis accuracy:

<u>Undervoltage (UV) Channel</u>

V_{ITN} = 0.8 V

Voltage Hysteresis (V_{HYS}) = 5% = 40 mV

Hysteresis Accuracy = ±1.5% = 39.4 mV or 40.6 mV

Release Voltage = V_{ITN} + V_{HYS} = 839.4 mV to 840.6 mV

<u>Overvoltage (OV) Channel</u>

V_{ITP} = 8 V

Voltage Hysteresis (V_{HYS}) = 2 V

Hysteresis Accuracy = ±1.5% = 1.97 V or 2.03 V

Release Voltage = V_{ITP} - V_{HYS} = 5.97 V to 6.03 V

8.3.3 Output Logic Configurations

TPS37 has two channels with separate sense pins and reset pins that can be configured independently of each other. Channel 1 is available as Open-Drain and Push-Pull while channel 2 is only available as Open-Drain topology.

The available output logic configuration combinations are shown in 表 8-2.

表 8-2. TPS37 Output Logic

DESCRIPTION	NOMENCLATURE	VALUE	
GPN	TPS37 (+ topology)	CHANNEL 1	CHANNEL 2
Topology (OV and UV only) both channels are either OV or UV • UV = Undervoltage • OV = Overvoltage • PP = Push-Pull • OD = Open-Drain • L = Active low • H = Active high	TPS37A	OV OD L	UV OD L
	TPS37B	OV PP H	UV OD L
	TPS37C	OV OD L	UV OD H
	TPS37D	OV PP H	UV OD H
	TPS37E	OV OD H	UV OD H
	TPS37F	OV OD H	UV OD L
	TPS37G	OV PP L	UV OD H
	TPS37H	OV PP L	UV OD L

8.3.3.1 Open-Drain

Open-drain output requires an external pull-up resistor to hold the voltage high to the required voltage logic. Connect the pull-up resistor to the proper voltage rail to enable the output to be connected to other devices at the correct interface voltage levels.

To select the right pull-up resistor consider system V_{OH} and the (I_{lkg}) current provided in the electrical characteristics, high resistors values will have a higher voltage drop affecting the output voltage high. The open-drain output can be connected as a wired-AND logic with other open-drain signals such as another TPS37 open-drain output pin.

8.3.3.2 Push-Pull

Push-Pull output does not require an external resistor since is the output is internally pulled-up to VDD during V_{OH} condition and output will be connected to GND during V_{OH} condition.

8.3.3.3 Active-High (RESET)

RESET (active-high), denoted with no bar above the pin label. RESET remains low (V_{OL}, deasserted) as long as sense voltage is in normal operation within the threshold boundaries and VDD voltage is above UVLO. To assert a reset sense pins needs to meet the condition below:

- For undervoltage variant the SENSE voltage need to cross the lower boundary (V_{ITN}).
- For overvoltage variant the SENSE voltage needs to cross the upper boundary (V_{ITP}).

8.3.3.4 Active-Low ($\overline{RESET}$)

$\overline{RESET}$ (active low) denoted with a bar above the pin label. $\overline{RESET}$ remains high voltage (V_{OH}, deasserted) (open-drain variant V_{OH} is measured against the pullup voltage) as long as sense voltage is in normal operation within the threshold boundaries and VDD voltage is above UVLO. To assert a reset sense pins needs to meet the condition below:

- For undervoltage variant the SENSE voltage need to cross the lower boundary (V_{ITN}).
- For overvoltage variant the SENSE voltage needs to cross the upper boundary (V_{ITP}).

Copyright © 2023 Texas Instruments Incorporated

8.3.4 User-Programmable Reset Time Delay

TPS37 has adjustable reset release time delay with external capacitors. Channel timing are independent of each other.

- A capacitor in CTR1 / $\overline{MR}$ program the reset time delay of Output 1.
- A capacitor in CTR2 / $\overline{MR}$ program the reset time delay of Output 2.
- No capacitor on these pins gives the fastest reset delay time indicated in the 节 7.6.

8.3.4.1 Reset Time Delay Configuration

The time delay (t_{CTR}) can be programmed by connecting a capacitor between CTR1 pin and GND, CTR2 for channel 2. In this section CTRx represent either channel 1 or channel 2.

The relationship between external capacitor $C_{CTRx_EXT\ (typ)}$ and the time delay $t_{CTRx\ (typ)}$ is given by 方程式 1.

$$t_{CTRx\ (typ)} = -\ln(0.28) \times R_{CTRx\ (typ)} \times C_{CTRx_EXT\ (typ)} + t_{CTRx\ (no\ cap)} \quad (1)$$

$R_{CTRx\ (typ)}$ = is in kilo ohms (kOhms)

$C_{CTRx_EXT\ (typ)}$ = is given in microfarads (μ F)

$t_{CTRx\ (typ)}$ = is the reset time delay (ms)

The reset delay varies according to three variables: the external capacitor (C_{CTRx_EXT}), CTR pin internal resistance (R_{CTRx}) provided in 节 7.5, and a constant. The minimum and maximum variance due to the constant is show in 方程式 2 and 方程式 3:

$$t_{CTRx\ (min)} = -\ln(0.31) \times R_{CTRx\ (min)} \times C_{CTRx_EXT\ (min)} + t_{CTRx\ (no\ cap\ (min))} \quad (2)$$

$$t_{CTRx\ (max)} = -\ln(0.25) \times R_{CTRx\ (max)} \times C_{CTRx_EXT\ (max)} + t_{CTRx\ (no\ cap\ (max))} \quad (3)$$

The recommended maximum reset delay capacitor for the TPS37 is limited to 10 μ F as this ensures enough time for the capacitor to fully discharge when a voltage fault occurs. Also, having a too large of a capacitor value can cause very slow charge up (rise times) and system noise can cause the the internal circuit to trip earlier or later near the threshold. This leads to variation in time delay where it can make the delay accuracy worse in the presence of system noise.

When a voltage fault occurs, the previously charged up capacitor discharges and if the monitored voltage returns from the fault condition before the delay capacitor discharges completely, the delay will be shorter than expected. The capacitor will begin charging from a voltage above zero and resulting in shorter than expected time delay. A larger delay capacitor can be used so long as the capacitor has enough time to fully discharge during the duration of the voltage fault. To ensure the capacitor is fully discharged, the time period or duration of the voltage fault needs to be greater than 5% of the programmed reset time delay.

8.3.5 User-Programmable Sense Delay

TPS37 has adjustable sense release time delay with external capacitors. Channel timing are independent of each other. Sense delay is used as a de-glitcher or ignoring known transients.

- A capacitor in CTS1 program the excursion detection on SENSE1.
- A capacitor in CTS2 program the excursion detection on SENSE2.
- No capacitor on these pins gives the fastest detection time indicated in the 节 7.6.

8.3.5.1 Sense Time Delay Configuration

The time delay (t_{CTS}) can be programmed by connecting a capacitor between CTS1 pin and GND, CTS2 for channel 2. In this section CTSx represent either channel 1 or channel 2.R

The relationship between external capacitor $C_{CTSx_EXT\ (typ)}$ and the time delay $t_{CTSx\ (typ)}$ is given by 方程式 4.

$$t_{CTSx\ (typ)} = -\ln(0.28) \times R_{CTSx\ (typ)} \times C_{CTSx_EXT\ (typ)} + t_{CTSx\ (no\ cap)} \quad (4)$$

R_{CTSx} = is in kilo ohms (kOhms)

C_{CTSX_EXT} = is given in microfarads (µ F)

t_{CTSx} = is the sense time delay (ms)

The sense delay varies according to three variables: the external capacitor (C_{CTSx_EXT}), CTS pin internal resistance (R_{CTSx}) provided in 节 7.5, and a constant. The minimum and maximum variance due to the constant is show in 方程式 5 and 方程式 6:

$$t_{CTSx\ (min)} = -\ln(0.31) \times R_{CTSx\ (min)} \times C_{CTSx_EXT\ (min)} + t_{CTSx\ (no\ cap\ (min))} \quad (5)$$

$$t_{CTSx\ (max)} = -\ln(0.25) \times R_{CTSx\ (max)} \times C_{CTSx_EXT\ (max)} + t_{CTSx\ (no\ cap\ (max))} \quad (6)$$

The recommended maximum sense delay capacitor for the TPS37 is limited to 10 µ F as this ensures enough time for the capacitor to fully discharge when a voltage fault occurs. Also, having a too large of a capacitor value can cause very slow charge up (rise times) and system noise can cause the the internal circuit to trip earlier or later near the threshold. This leads to variation in time delay where it can make the delay accuracy worse in the presence of system noise.

When a voltage fault occurs, the previously charged up capacitor discharges and if the monitored voltage returns from the fault condition before the delay capacitor discharges completely, the delay will be shorter than expected. The capacitor will begin charging from a voltage above zero and resulting in shorter than expected time delay. A larger delay capacitor can be used so long as the capacitor has enough time between fault events to fully discharge during the duration of the voltage fault. To ensure the capacitor is fully discharged, the time period or time duration between fault events needs to be greater than 10% of the programmed sense time delay.

Copyright © 2023 Texas Instruments Incorporated

8.3.6 Manual RESET (CTR1 / $\overline{MR}$) and (CTR2 / $\overline{MR}$) Input

The manual reset input allows a processor or other logic circuits to initiate a reset. In this section $\overline{MR}$ is a generic reference to (CTR1 / $\overline{MR}$) and (CTR2 / $\overline{MR}$). A logic low on $\overline{MR}$ causes $\overline{RESET1}$ to assert on reset output. After $\overline{MR}$ is left floating, $\overline{RESET1}$ will release the reset if the voltage at SENSE1 pin is at nominal voltage. $\overline{MR}$ should not be driven high, this pin should be left floating or connected to a capacitor to GND, this pin can be left unconnected if is not used.

If the logic driving the $\overline{MR}$ cannot tri-state (floating and GND) then a logic-level FET should be used as illustrated in 图 8-8.

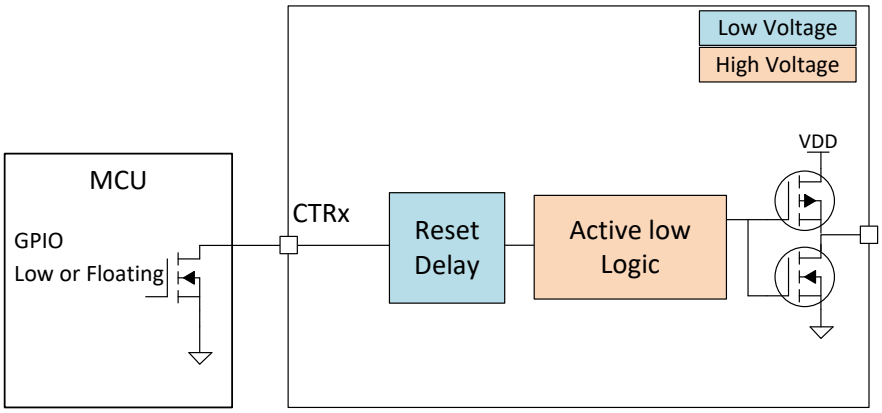

图 8-8. Manual Reset Implementation

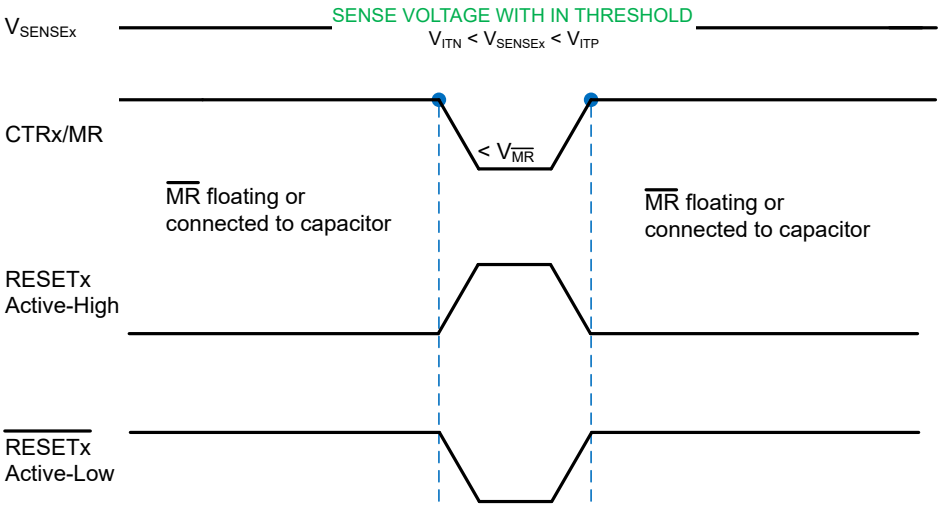

图 8-9. Manual Reset Timing Diagram

表 8-3. $\overline{MR}$ Functional Table

$\overline{MR}$	SENSE ON NOMINAL VOLTAGE	RESET STATUS
Low	Yes	Reset asserted
Floating	Yes	Fast reset release when SENSE voltage goes back to nominal voltage
Capacitor	Yes	Programmable reset time delay
High	Yes	NOT Recommended

9 Device Functional Modes

表 9-1. Undervoltage Detect Functional Mode Truth Table

DESCRIPTION	SENSE		CTR [1] / $\overline{MR}$ PIN	VDD PIN	OUTPUT [2] ($\overline{RESET}$ PIN)
	PREVIOUS CONDITION	CURRENT CONDITION			
Normal Operation	SENSE > $V_{ITN(UV)}$	SENSE > $V_{ITN(UV)}$	Open or capacitor connected	$V_{DD} > V_{DD(MIN)}$	High
Undervoltage Detection	SENSE > $V_{ITN(UV)}$	SENSE < $V_{ITN(UV)}$	Open or capacitor connected	$V_{DD} > V_{DD(MIN)}$	Low
Undervoltage Detection	SENSE < $V_{ITN(UV)}$	SENSE > $V_{ITN(UV)}$	Open or capacitor connected	$V_{DD} > V_{DD(MIN)}$	Low
Normal Operation	SENSE < $V_{ITN(UV)}$	SENSE > $V_{ITN(UV)}$ + HYS	Open or capacitor connected	$V_{DD} > V_{DD(MIN)}$	High
Manual Reset	SENSE > $V_{ITN(UV)}$	SENSE > $V_{ITN(UV)}$	Low	$V_{DD} > V_{DD(MIN)}$	Low
UVLO Engaged	SENSE > $V_{ITN(UV)}$	SENSE > $V_{ITN(UV)}$	Open or capacitor connected	$V_{POR} < V_{DD} < V_{DD(MIN)}$	Low
Below V_{POR}, Undefined Output	SENSE > $V_{ITN(UV)}$	SENSE > $V_{ITN(UV)}$	Open or capacitor connected	$V_{DD} < V_{POR}$	Undefined

(1) Reset time delay is ignored in the truth table.
(2) Open-drain active low output requires an external pull-up resistor to a pull-up voltage.

表 9-2. Overvoltage Detect Functional Mode Truth Table

DESCRIPTION	SENSE		CTR [1] / $\overline{MR}$ PIN	VDD PIN	OUTPUT [2] ($\overline{RESET}$ PIN)
	PREVIOUS CONDITION	CURRENT CONDITION			
Normal Operation	SENSE < $V_{ITN(OV)}$	SENSE < $V_{ITN(OV)}$	Open or capacitor connected	$V_{DD} > V_{DD(MIN)}$	High
Overvoltage Detection	SENSE < $V_{ITN(OV)}$	SENSE > $V_{ITN(OV)}$	Open or capacitor connected	$V_{DD} > V_{DD(MIN)}$	Low
Overvoltage Detection	SENSE > $V_{ITN(OV)}$	SENSE < $V_{ITN(OV)}$	Open or capacitor connected	$V_{DD} > V_{DD(MIN)}$	Low
Normal Operation	SENSE > $V_{ITN(OV)}$	SENSE < $V_{ITN(OV)}$ - HYS	Open or capacitor connected	$V_{DD} > V_{DD(MIN)}$	High
Manual Reset	SENSE < $V_{ITN(OV)}$	SENSE < $V_{ITN(OV)}$	Low	$V_{DD} > V_{DD(MIN)}$	Low
UVLO Engaged	SENSE < $V_{ITN(OV)}$	SENSE < $V_{ITN(OV)}$	Open or capacitor connected	$V_{POR} < V_{DD}$ < UVLO	Low
Below V_{POR}, Undefined Output	SENSE < $V_{ITN(OV)}$	SENSE < $V_{ITN(OV)}$	Open or capacitor connected	$V_{DD} < V_{POR}$	Undefined

(1) Reset time delay is ignored in the truth table.
(2) Open-drain active low output requires an external pull-up resistor to a pull-up voltage.

Copyright © 2023 Texas Instruments Incorporated

10 Application and Implementation

备注

以下应用部分中的信息不属于 TI 器件规格的范围，TI 不担保其准确性和完整性。TI 的客 户应负责确定器件是否适用于其应用。客户应验证并测试其设计，以确保系统功能。

10.1 Adjustable Voltage Thresholds

方程式 7 illustrates an example of how to adjust the voltage threshold with external resistor dividers. The resistors can be calculated depending on the desired voltage threshold and device part number. TI recommends using the 0.8 V voltage threshold device when using an adjustable voltage variant. This variant bypasses the internal resistor ladder.

For example, consider a 12 V rail being monitored V_{MON} for undervoltage (UV) using channel 2 of the TPS37A010122DSKR variant. Using 方程式 7 and shown in 图 10-1, R_1 is the top resistor of the resistor divider that is between V_{MON} and V_{SENSE2}, R_2 is the bottom resistor that is between V_{SENSE2} and GND, V_{MON} is the voltage rail that is being monitored and V_{SENSE2} is the input threshold voltage. The monitored UV threshold, denoted as V_{MON-}, where the device will assert a reset signal occurs when $V_{SENSE2} = V_{IT-(UV)}$ or, for this example, V_{MON-} = 10.8V which is 90% from 12 V. Using 方程式 7 and assuming R_2 = 10kΩ, R_1 can be calculated shown in 方程式 8 where I_{R1} is represented in 方程式 9:

$$V_{SENSE2} = V_{MON-} \times (R_2 \div (R_1 + R_2)) \quad (7)$$

$$R_1 = (V_{MON-} - V_{SENSE2}) \div I_{R1} \quad (8)$$

$$I_{R1} = I_{R2} = V_{SENSE2} \div R_2 \quad (9)$$

Substituting 方程式 9 into 方程式 8 and solving for R_1 in 方程式 7, R_1 = 125kΩ. The TPS37A010122DSKR is typically meant to monitor a 0.8 V rail with ±2% voltage threshold hysteresis. For the reset signal to become deasserted, V_{MON} would need to go above $V_{IT-} + V_{HYS}$. For this example, V_{MON} = 11.016 V when the reset signal becomes deasserted.

There are inaccuracies that must be taken into consideration while adjusting voltage thresholds. Aside from the tolerance of the resistor divider, there is an internal resistance of the SENSE pin that may affect the accuracy of the resistor divider. Although expected to be very high impedance, users are recommended to calculate the values for the design specifications. The internal SENSE resistance R_{SENSE} can be calculated by the SENSE voltage V_{SENSE} divided by the SENSE current I_{SENSE} as shown in 方程式 11. V_{SENSE} can be calculated using 方程式 7 depending on the resistor divider and monitored voltage. I_{SENSE} can be calculated using 方程式 10.

$$I_{SENSE} = [(V_{MON} - V_{SENSE}) \div R_1] - (V_{SENSE} \div R_2) \quad (10)$$

$$R_{SENSE} = V_{SENSE} \div I_{SENSE} \quad (11)$$

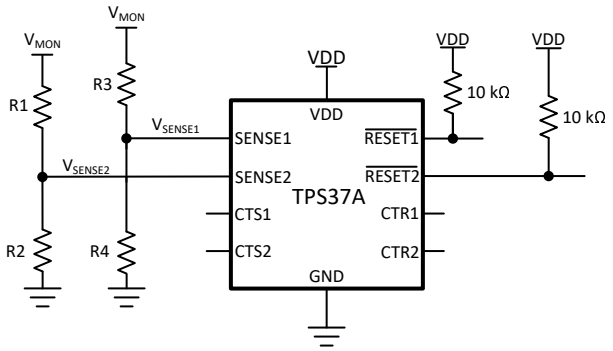

图 10-1. Adjustable Voltage Threshold with External Resistor Dividers

10.1.1 Application Curves

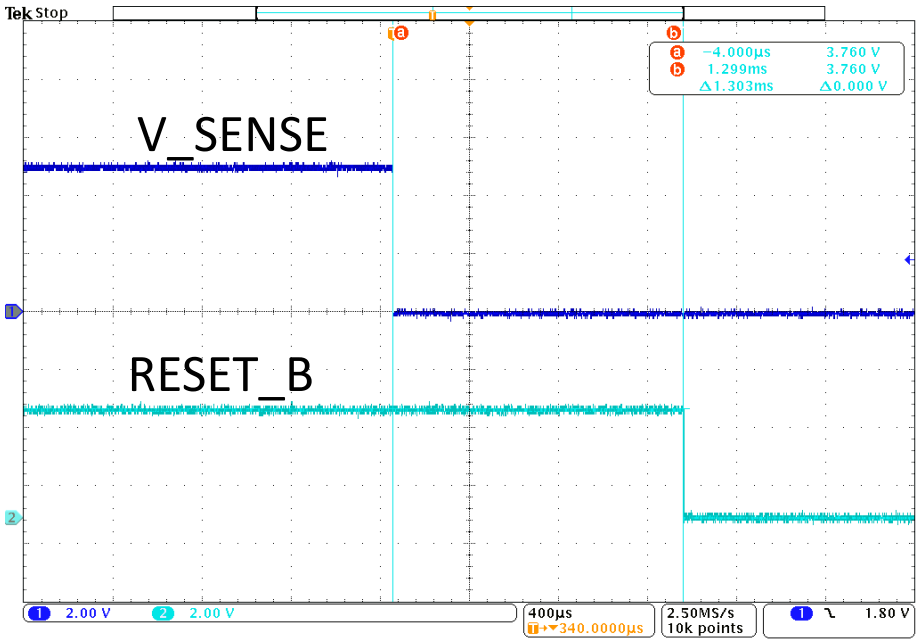

图 10-2. Undervoltage Reset Waveform

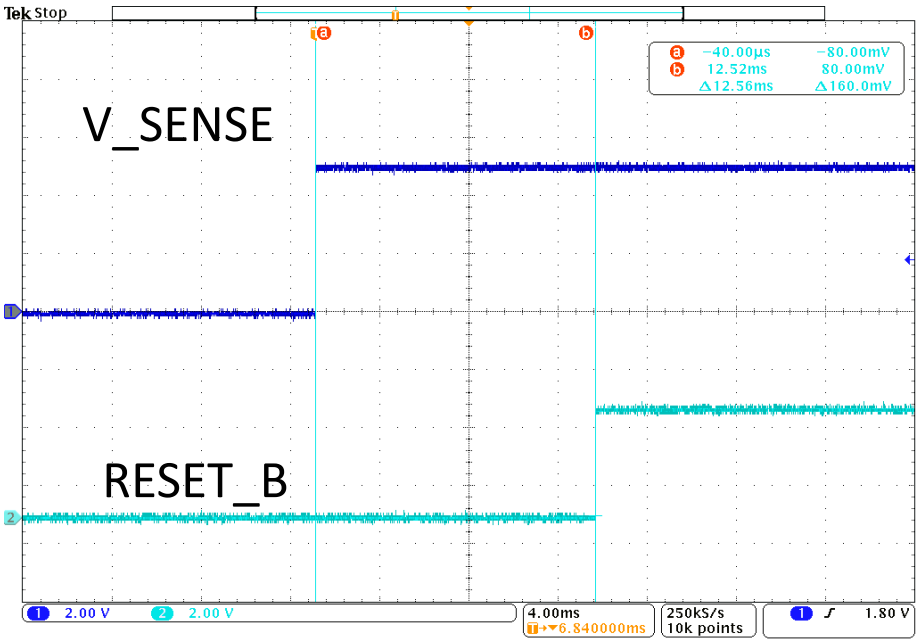

图 10-3. Undervoltage Recovery Waveform

10.2 Application Information

The following sections describe in detail how to properly use this device, depending on the requirements of the final application.

Copyright © 2023 Texas Instruments Incorporated

10.2.1 Typical Application

10.2.1.1 Design 1: High Voltage – Fast AC Signal Monitoring For Power Fault Detection

In many industrial and factory automation applications, there are multiple power rails that power various subsystems within the application. Some of these power rails include 24 / 48 VAC AC sources with a known operating frequency that requires a full-bridge rectifier and capacitors to convert its signal to a DC voltage where it can be monitored by a voltage supervisor. One drawback with the described conversion is the response time of the DC voltage when the AC power rail experiences a change of operating frequency or voltage amplitude. Due to the output filter of the full-bridge rectifier, the detection in the change of voltage or operating frequency may require several AC cycles before the voltage supervisor outputs a fault condition. The direct monitoring of the AC source by using a "Resistive-Drop" supply topology circuit provides the user a fast transient fault detection. In this design example, the TPS37A is being highlighted with the ability to offer a unique "window operating" solution by monitoring the output of the AC source for over or undervoltage operation.

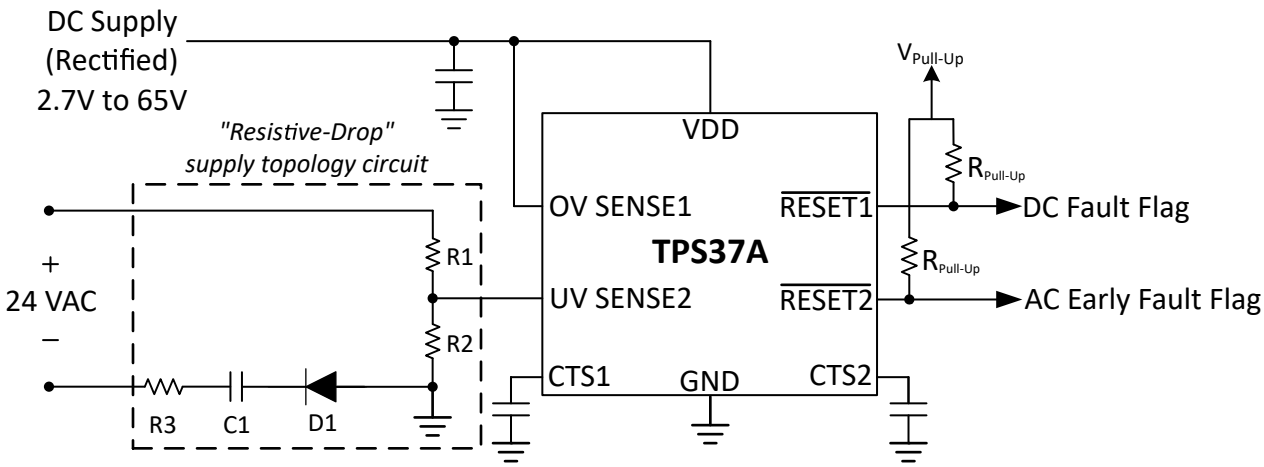

* The circuit solution is not isolated and one must take into account when planning to use in high power systems.

图 10-4. Sensing an AC Signal for Power Fault Detection

10.2.1.1.1 Design Requirements

This design requires voltage supervision on an AC, with a known operating frequency, power supply rail. The overvoltage fault sensing is achieved by monitoring the DC output of a full bridge rectifier while the undervoltage fault is detected by inputting a half wave signal and its voltage frequency and magnitude are being monitored. The target output of this TPS37A application is for 5 V reset logic.

PARAMETER	DESIGN REQUIREMENT	DESIGN RESULT
Power Rail Voltage Supervision	Monitor 24 VAC 800 Hz power supply for undervoltage and overvoltage conditions. Trigger undervoltage fault at 5 V and overvoltage fault at 24 V.	TPS37A provides voltage monitoring with 1.5% max accuracy with adjustable/non-adjustable variations.
Maximum Input Voltage	Operate with power supply input up to 34 V.	The TPS37A can support a VDD of up to 65 V.
Output logic voltage	Open-Drain Output Topology	An open-drain output is recommended to provide the a 5 V reset signal.
SENSE Delay when a fault is detected	$\overline{\text{RESET}}$ delay of at least 0.625 ms which is the time between half wave cycles	C_{CTS2} = 5.6 nF sets 717 µs delay
Voltage Monitor Accuracy	Maximum voltage monitor accuracy of 1.5%.	The TPS37A has 1.5% maximum voltage monitor accuracy.

10.2.1.1.2 Detailed Design Procedure

The main advantage of this unique application is being able to monitor a single AC source with a known operating frequency AC source rail. Because the TPS37A is an over and undervoltage detector with delay

function, detecting faults either from a change of operating frequency range or voltage amplitude of the AC source is achievable.

图 10-4 illustrates an example of how the TPS37A is monitoring an AC source. Input to SENSE1 of TPS37A is monitoring a full wave rectifier DC signal. The DC signal is the result from the rectification of the 24 VAC source and monitors the AC source for overvoltage events due to a change of voltage amplitude or an increase to operating frequency. Input to SENSE2 of TPS37A will monitor the AC source by using a "resistive-drop" supply topology circuit. The unique circuit resistively divides the AC voltage signal and provides only the positive half wave 图 10-5 into SENSE2 input. The half wave signal does not go through any output filter and hence any change to the AC voltage or operating frequency can be rapidly detected. Knowing the operating frequency of the AC source and converting to the time domain, the TPS37A SENSE2 delay can be programmed, by the capacitor on CTS2 pin, to equal or be greater than one-half of the operating period (the frequency of the half wave rectification signal) or the half cycle shown in 图 10-5. When the half wave voltage amplitude falls below the SENSE2 threshold voltage, the SENSE2 time delay counter begins to increment. If the next half wave voltage amplitude exceeds the SENSE2 threshold voltage, the SENSE2 time delay counter will reset and the TPS37A $\overline{\text{RESET2}}$ pin will indicate no fault was detected. Conversely, if the voltage amplitude of the half wave does not reach the SENSE2 threshold voltage within the programmed time delay of t_{CTS}, a fault will occur. Also, a fault can occur if the operating frequency from the AC source decreases, resulting in lower AC voltage amplitude at the programmed time delay t_{CTS}.

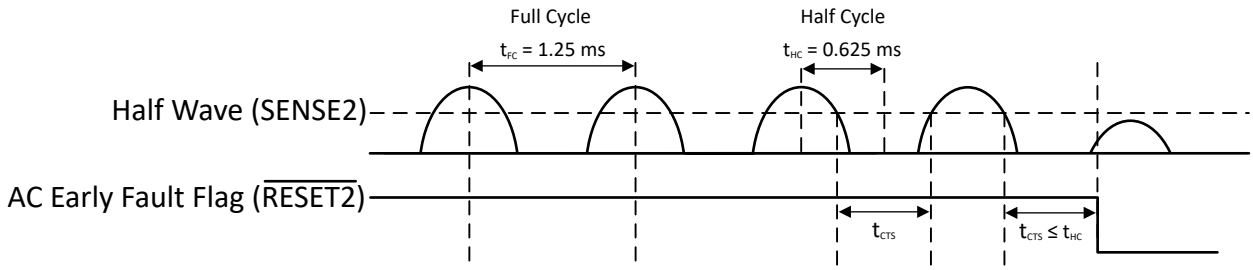

图 10-5. Design 2 Timing Diagram

The TPS37A, with its ability of having a wide VDD range from 2.7 V to 65 V and under and overvoltage detection, offers a unique “window operating” AC power rail monitoring solution. Combining SENSE delay feature with the "resistive-drop" supply circuitry, detecting an undervoltage event on the half cycle of the AC power rail provides a fast power fault response. Likewise, the TPS37A provides an overvoltage monitoring and SENSE delay fault detection for the same AC power rail. With under and overvoltage supervision of the AC power rail, applications needing a specific operating DC range to protect its subsystems is achieve through TPS37A. Good design practice recommends using a 0.1-µF capacitor on the VDD pin and this capacitance may need to increase if using an adjustable version with a resistor divider.

Note that this design solution is not isolated and one must take into account when planning to use in high power systems.

Copyright © 2023 Texas Instruments Incorporated

10.3 Power Supply Recommendations

These devices are designed to operate from an input supply with a voltage range between 1.4 V (V_{POR}) to 65 V (max operation). Good analog design practice recommends placing a minimum 0.1 µF ceramic capacitor as near as possible to the VDD pin.

10.3.1 Power Dissipation and Device Operation

The permissible power dissipation for any package is a measure of the capability of the device to pass heat from the power source, the junctions of the IC, to the ultimate heat sink, the ambient environment. Thus, the power dissipation is dependent on the ambient temperature and the thermal resistance across the various interfaces between the die junction and ambient air.

The maximum continuous allowable power dissipation for the device in a given package can be calculated using 方程式 12:

$$P_{D\text{-}MAX} = ((T_{J\text{-}MAX} - T_A) / R_{\theta JA}) \quad (12)$$

The actual power being dissipated in the device can be represented by 方程式 13:

$$P_D = V_{DD} \times I_{DD} + p_{RESET} \quad (13)$$

p_{RESET} is calculated by 方程式 14 or 方程式 15

$$p_{RESET\ (PUSHPULL)} = VDD - V_{RESET} \times I_{RESET} \quad (14)$$

$$p_{RESET\ (OPEN\text{-}DRAIN)} = V_{RESET} \times I_{RESET} \quad (15)$$

方程式 12 and 方程式 13 establish the relationship between the maximum power dissipation allowed due to thermal consideration, the voltage drop across the device, and the continuous current capability of the device. These two equations should be used to determine the optimum operating conditions for the device in the application.

In applications where lower power dissipation (P_D) and/or excellent package thermal resistance ($R_{\theta JA}$) is present, the maximum ambient temperature ($T_{A\text{-}MAX}$) may be increased.

In applications where high power dissipation and/or poor package thermal resistance is present, the maximum ambient temperature ($T_{A\text{-}MAX}$) may have to be de-rated. $T_{A\text{-}MAX}$ is dependent on the maximum operating junction temperature ($T_{J\text{-}MAX\text{-}OP}$ = 125°C), the maximum allowable power dissipation in the device package in the application ($P_{D\text{-}MAX}$), and the junction-to ambient thermal resistance of the part/package in the application ($R_{\theta JA}$), as given by 方程式 16:

$$T_{A\text{-}MAX} = (T_{J\text{-}MAX\text{-}OP} - (R_{\theta JA} \times P_{D\text{-}MAX})) \quad (16)$$

10.4 Layout

10.4.1 Layout Guidelines

- Make sure that the connection to the VDD pin is low impedance. Good analog design practice is to place a greater than 0.1 µF ceramic capacitor as near as possible to the VDD pin.
- To further improve the noise immunity on the SENSEx pins, placing a 10 nF to 100 nF capacitor between the SENSEx pins and GND can reduce the sensitivity to transient voltages on the monitored signal.
- If a capacitor is used on CTS1, CTS2, CTR1, or CTR2, place these components as close as possible to the respective pins. If the capacitor adjustable pins are left unconnected, make sure to minimize the amount of parasitic capacitance on the pins to less than 5 pF.
- For open-drain variants, place the pull-up resistors on $\overline{RESET1}$ and $\overline{RESET2}$ pins as close to the pins as possible.
- When laying out metal traces, separate high voltage traces from low voltage traces as much as possible. If high and low voltage traces need to run close by, spacing between traces should be greater than 20 mils

(0.5 mm).

- Do not have high voltage metal pads or traces closer than 20 mils (0.5 mm) to the low voltage metal pads or traces.

10.4.2 Layout Example

The DSK layout example in 图 10-6 shows how the TPS37 is laid out on a printed circuit board (PCB) with user-defined delays.

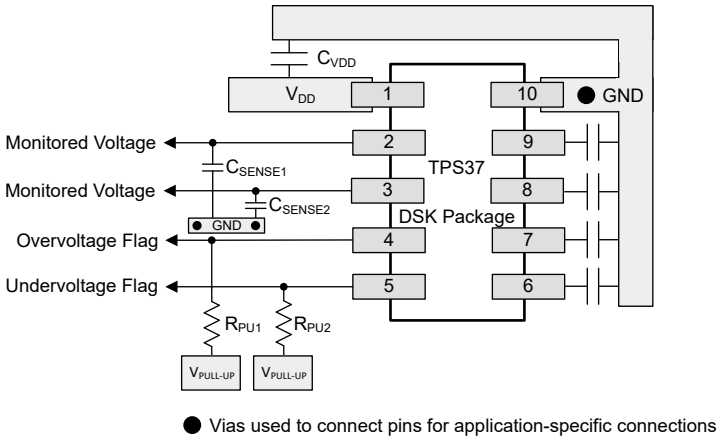

图 10-6. TPS37 DSK Package Recommended Layout

Copyright © 2023 Texas Instruments Incorporated

The DYY layout example in 图 10-7 shows how the TPS37 is laid out on a printed circuit board (PCB) with user-defined delays.

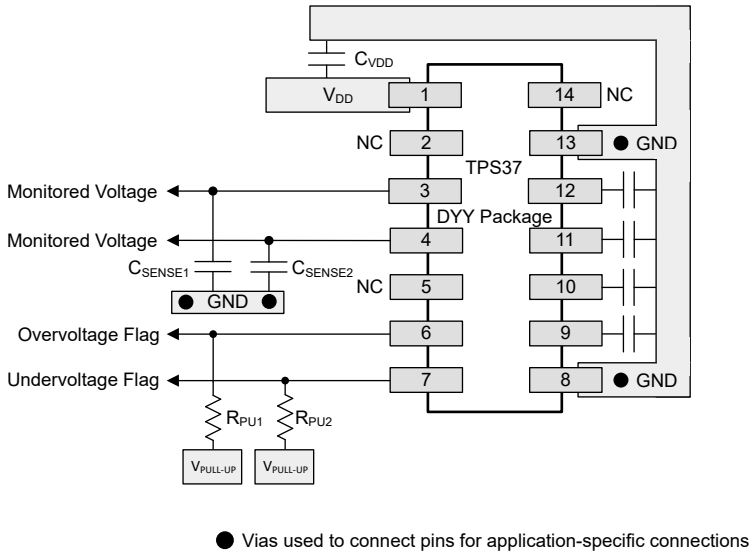

图 10-7. TPS37 DYY Package Recommended Layout

10.4.3 Creepage Distance

Per IEC 60664 Creepage is the shortest distance between two conductive parts or as shown in 图 10-8 the distance between high voltage conductive parts and grounded parts, the floating conductive part is ignored and subtracted from the total distance.

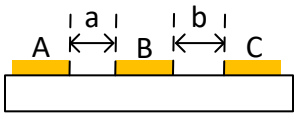

图 10-8. Creepage Distance

图 10-8 details:

- A = Left pins (high voltage)
- B = Central pad (not internally connected, can be left floating or connected to GND)
- C = Right pins (low voltage)
- Creepage distance = a + b

11 Device and Documentation Support

11.1 Device Nomenclature

节 5 shows how to decode the function of the device based on its part number

表 11-1 shows TPS37 possible voltage options per channel. Contact TI sales representatives or on TI's E2E forum for details and availability of other options; minimum order quantities apply.

表 11-1. Voltage Options

100 mV STEPS				400 mV STEPS		500 mV STEPS		1 V STEPS	
NOMEN-CLATURE	VOLTAGE OPTIONS	NOMEN-CLATURE	VOLTAGE OPTIONS	NOMEN-CLATURE	VOLTAGE OPTIONS	NOMEN-CLATURE	VOLTAGE OPTIONS	NOMEN-CLATURE	VOLTAGE OPTIONS
01	800 mV (divider bypass)	**70**	7.0 V	**A0**	10.4 V	**D0**	20.5 V	**F0**	31.0 V
27	2.7 V	**71**	7.1 V	**A1**	10.8 V	**D1**	21.0 V	**F1**	32.0 V
28	2.8 V	**72**	7.2 V	**A2**	11.2 V	**D2**	21.5 V	**F2**	33.0 V
29	2.9 V	**73**	7.3 V	**A3**	11.6 V	**D3**	22.0 V	**F3**	34.0 V
30	3.0 V	**74**	7.4 V	**A4**	12.0 V	**D4**	22.5 V	**F4**	35.0 V
31	3.1 V	**75**	7.5 V	**A5**	12.4 V	**D5**	23.0 V	**F5**	36.0 V
32	3.2 V	**76**	7.6 V	**A6**	12.8 V	**D6**	23.5 V		
33	3.3 V	**77**	7.7 V	**A7**	13.2 V	**D7**	24.0 V		
34	3.4 V	**78**	7.8 V	**A8**	13.6 V	**D8**	24.5 V		
35	3.5 V	**79**	7.9 V	**A9**	14.0 V	**D9**	25.0 V		
36	3.6 V	**80**	8.0 V	**B0**	14.4 V	**E0**	25.5 V		
37	3.7 V	**81**	8.1 V	**B1**	14.8 V	**E1**	26.0 V		
38	3.8 V	**82**	8.2 V	**B2**	15.2 V	**E2**	26.5 V		
39	3.9 V	**83**	8.3 V	**B3**	15.6 V	**E3**	27.0 V		
40	4.0 V	**84**	8.4 V	**B4**	16.0 V	**E4**	27.5 V		
41	4.1 V	**85**	8.5 V	**B5**	16.4 V	**E5**	28.0 V		
42	4.2 V	**86**	8.6 V	**B6**	16.8 V	**E6**	28.5 V		
43	4.3 V	**87**	8.7 V	**B7**	17.2 V	**E7**	29.0 V		
44	4.4 V	**88**	8.8 V	**B8**	17.6 V	**E8**	29.5 V		
45	4.5 V	**89**	8.9 V	**B9**	18.0 V	**E9**	30.0 V		
46	4.6 V	**90**	9.0 V	**C0**	18.4 V				
47	4.7 V	**91**	9.1 V	**C1**	18.8 V				
48	4.8 V	**92**	9.2 V	**C2**	19.2 V				
49	4.9 V	**93**	9.3 V	**C3**	19.6 V				
50	5.0 V	**94**	9.4 V	**C4**	20.0 V				
51	5.1 V	**95**	9.5 V						
52	5.2 V	**96**	9.6 V						
53	5.3 V	**97**	9.7 V						
54	5.4 V	**98**	9.8 V						
55	5.5 V	**99**	9.9 V						
56	5.6 V	**00**	10.0 V						
57	5.7 V								
58	5.8 V								
59	5.9 V								
60	6.0 V								

Copyright © 2023 Texas Instruments Incorporated

表 11-1. Voltage Options (continued)

100 mV STEPS				400 mV STEPS		500 mV STEPS		1 V STEPS	
NOMEN-CLATURE	VOLTAGE OPTIONS	NOMEN-CLATURE	VOLTAGE OPTIONS	NOMEN-CLATURE	VOLTAGE OPTIONS	NOMEN-CLATURE	VOLTAGE OPTIONS	NOMEN-CLATURE	VOLTAGE OPTIONS
61	6.1 V								
62	6.2 V								
63	6.3 V								
64	6.4 V								
65	6.5 V								
66	6.6 V								
67	6.7 V								
68	6.8 V								
69	6.9 V								

11.2 支持资源

TI E2E™ 支持论坛是工程师的重要参考资料，可直接从专家获得快速、经过验证的解答和设计帮助。搜索现有解答或提出自己的问题可获得所需的快速设计帮助。

链接的内容由各个贡献者“按原样”提供。这些内容并不构成 TI 技术规范，并且不一定反映 TI 的观点；请参阅 TI 的《使用条款》。

11.3 Trademarks

TI E2E™ is a trademark of Texas Instruments.
所有商标均为其各自所有者的财产。

11.4 静电放电警告

静电放电 (ESD) 会损坏这个集成电路。德州仪器 (TI) 建议通过适当的预防措施处理所有集成电路。如果不遵守正确的处理和安装程序，可能会损坏集成电路。

ESD 的损坏小至导致微小的性能降级，大至整个器件故障。精密的集成电路可能更容易受到损坏，这是因为非常细微的参数更改都可能会导致器件与其发布的规格不相符。

11.5 术语表

TI 术语表　　本术语表列出并解释了术语、首字母缩略词和定义。

PACKAGING INFORMATION

Orderable part number	Status (1)	Material type (2)	Package | Pins	Package qty | Carrier	RoHS (3)	Lead finish/ Ball material (4)	MSL rating/ Peak reflow (5)	Op temp (°C)	Part marking (6)
TPS37A010122DSKR	Active	Production	SON (DSK) | 10	3000 | LARGE T&R	Yes	SN	Level-1-260C-UNLIM	-40 to 125	2KAL
TPS37A010122DSKR.A	Active	Production	SON (DSK) | 10	3000 | LARGE T&R	Yes	SN	Level-1-260C-UNLIM	-40 to 125	2KAL
TPS37B010122DSKR	Active	Production	SON (DSK) | 10	3000 | LARGE T&R	Yes	NIPDAU	Level-1-260C-UNLIM	-40 to 125	2K8L
TPS37B010122DSKR.A	Active	Production	SON (DSK) | 10	3000 | LARGE T&R	Yes	NIPDAU	Level-1-260C-UNLIM	-40 to 125	2K8L
TPS37E010122DSKR	Active	Production	SON (DSK) | 10	3000 | LARGE T&R	Yes	SN	Level-1-260C-UNLIM	-40 to 125	32HL
TPS37E010122DSKR.A	Active	Production	SON (DSK) | 10	3000 | LARGE T&R	Yes	SN	Level-1-260C-UNLIM	-40 to 125	32HL
TPS37F010122DSKR	Active	Production	SON (DSK) | 10	3000 | LARGE T&R	Yes	SN	Level-1-260C-UNLIM	-40 to 125	2K9L
TPS37F010122DSKR.A	Active	Production	SON (DSK) | 10	3000 | LARGE T&R	Yes	SN	Level-1-260C-UNLIM	-40 to 125	2K9L
TPS37F010122DSKRG4	Active	Production	SON (DSK) | 10	3000 | LARGE T&R	Yes	NIPDAU	Level-1-260C-UNLIM	-40 to 125	2K9L
TPS37F010122DSKRG4.A	Active	Production	SON (DSK) | 10	3000 | LARGE T&R	Yes	NIPDAU	Level-1-260C-UNLIM	-40 to 125	2K9L

(1) **Status:** For more details on status, see our product life cycle.

(2) **Material type:** When designated, preproduction parts are prototypes/experimental devices, and are not yet approved or released for full production. Testing and final process, including without limitation quality assurance, reliability performance testing, and/or process qualification, may not yet be complete, and this item is subject to further changes or possible discontinuation. If available for ordering, purchases will be subject to an additional waiver at checkout, and are intended for early internal evaluation purposes only. These items are sold without warranties of any kind.

(3) **RoHS values:** Yes, No, RoHS Exempt. See the TI RoHS Statement for additional information and value definition.

(4) **Lead finish/Ball material:** Parts may have multiple material finish options. Finish options are separated by a vertical ruled line. Lead finish/Ball material values may wrap to two lines if the finish value exceeds the maximum column width.

(5) **MSL rating/Peak reflow:** The moisture sensitivity level ratings and peak solder (reflow) temperatures. In the event that a part has multiple moisture sensitivity ratings, only the lowest level per JEDEC standards is shown. Refer to the shipping label for the actual reflow temperature that will be used to mount the part to the printed circuit board.

(6) **Part marking:** There may be an additional marking, which relates to the logo, the lot trace code information, or the environmental category of the part.

Multiple part markings will be inside parentheses. Only one part marking contained in parentheses and separated by a "~" will appear on a part. If a line is indented then it is a continuation of the previous line and the two combined represent the entire part marking for that device.

Important Information and Disclaimer: The information provided on this page represents TI's knowledge and belief as of the date that it is provided. TI bases its knowledge and belief on information provided by third parties, and makes no representation or warranty as to the accuracy of such information. Efforts are underway to better integrate information from third parties. TI has taken and continues to take reasonable steps to provide representative

and accurate information but may not have conducted destructive testing or chemical analysis on incoming materials and chemicals. TI and TI suppliers consider certain information to be proprietary, and thus CAS numbers and other limited information may not be available for release.

In no event shall TI's liability arising out of such information exceed the total purchase price of the TI part(s) at issue in this document sold by TI to Customer on an annual basis.

OTHER QUALIFIED VERSIONS OF TPS37 :

- Automotive : TPS37-Q1

NOTE: Qualified Version Definitions:

- Automotive - Q100 devices qualified for high-reliability automotive applications targeting zero defects

TAPE AND REEL INFORMATION

REEL DIMENSIONS

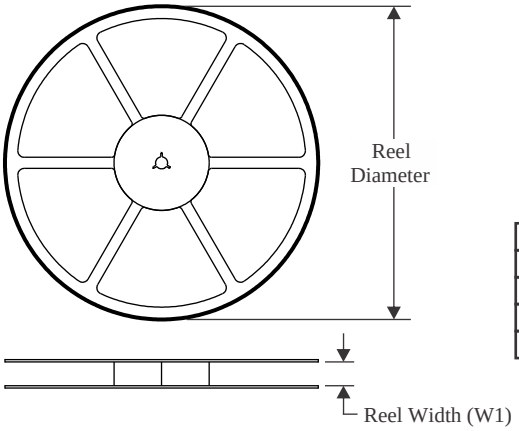

TAPE DIMENSIONS

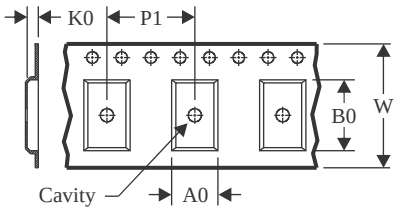

A0	Dimension designed to accommodate the component width
B0	Dimension designed to accommodate the component length
K0	Dimension designed to accommodate the component thickness
W	Overall width of the carrier tape
P1	Pitch between successive cavity centers

QUADRANT ASSIGNMENTS FOR PIN 1 ORIENTATION IN TAPE

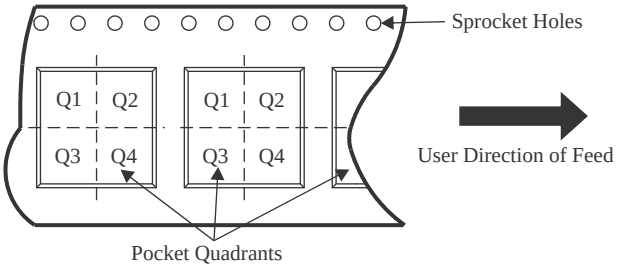

*All dimensions are nominal

Device	Package Type	Package Drawing	Pins	SPQ	Reel Diameter (mm)	Reel Width W1 (mm)	A0 (mm)	B0 (mm)	K0 (mm)	P1 (mm)	W (mm)	Pin1 Quadrant
TPS37A010122DSKR	SON	DSK	10	3000	180.0	8.4	2.8	2.8	1.0	4.0	8.0	Q2
TPS37B010122DSKR	SON	DSK	10	3000	180.0	8.4	2.8	2.8	1.0	4.0	8.0	Q2
TPS37E010122DSKR	SON	DSK	10	3000	180.0	8.4	2.8	2.8	1.0	4.0	8.0	Q2
TPS37F010122DSKR	SON	DSK	10	3000	180.0	8.4	2.8	2.8	1.0	4.0	8.0	Q2
TPS37F010122DSKRG4	SON	DSK	10	3000	180.0	8.4	2.8	2.8	1.0	4.0	8.0	Q2

TAPE AND REEL BOX DIMENSIONS

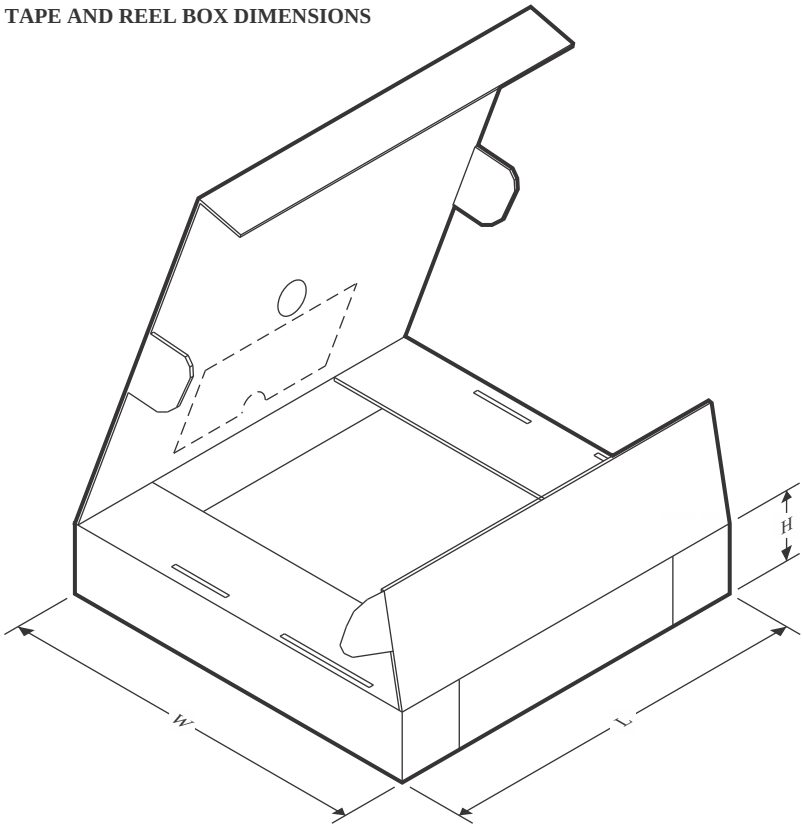

*All dimensions are nominal

Device	Package Type	Package Drawing	Pins	SPQ	Length (mm)	Width (mm)	Height (mm)
TPS37A010122DSKR	SON	DSK	10	3000	210.0	185.0	35.0
TPS37B010122DSKR	SON	DSK	10	3000	210.0	185.0	35.0
TPS37E010122DSKR	SON	DSK	10	3000	210.0	185.0	35.0
TPS37F010122DSKR	SON	DSK	10	3000	210.0	185.0	35.0
TPS37F010122DSKRG4	SON	DSK	10	3000	210.0	185.0	35.0

DSK 10 WSON - 0.8 mm max height

2.5 x 2.5 mm, 0.5 mm pitch

PLASTIC SMALL OUTLINE - NO LEAD

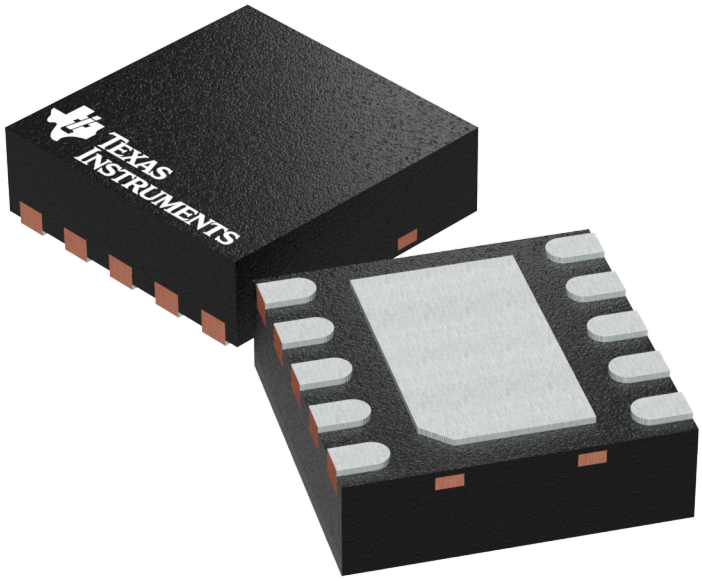

Images above are just a representation of the package family, actual package may vary.
Refer to the product data sheet for package details.

TEXAS INSTRUMENTS

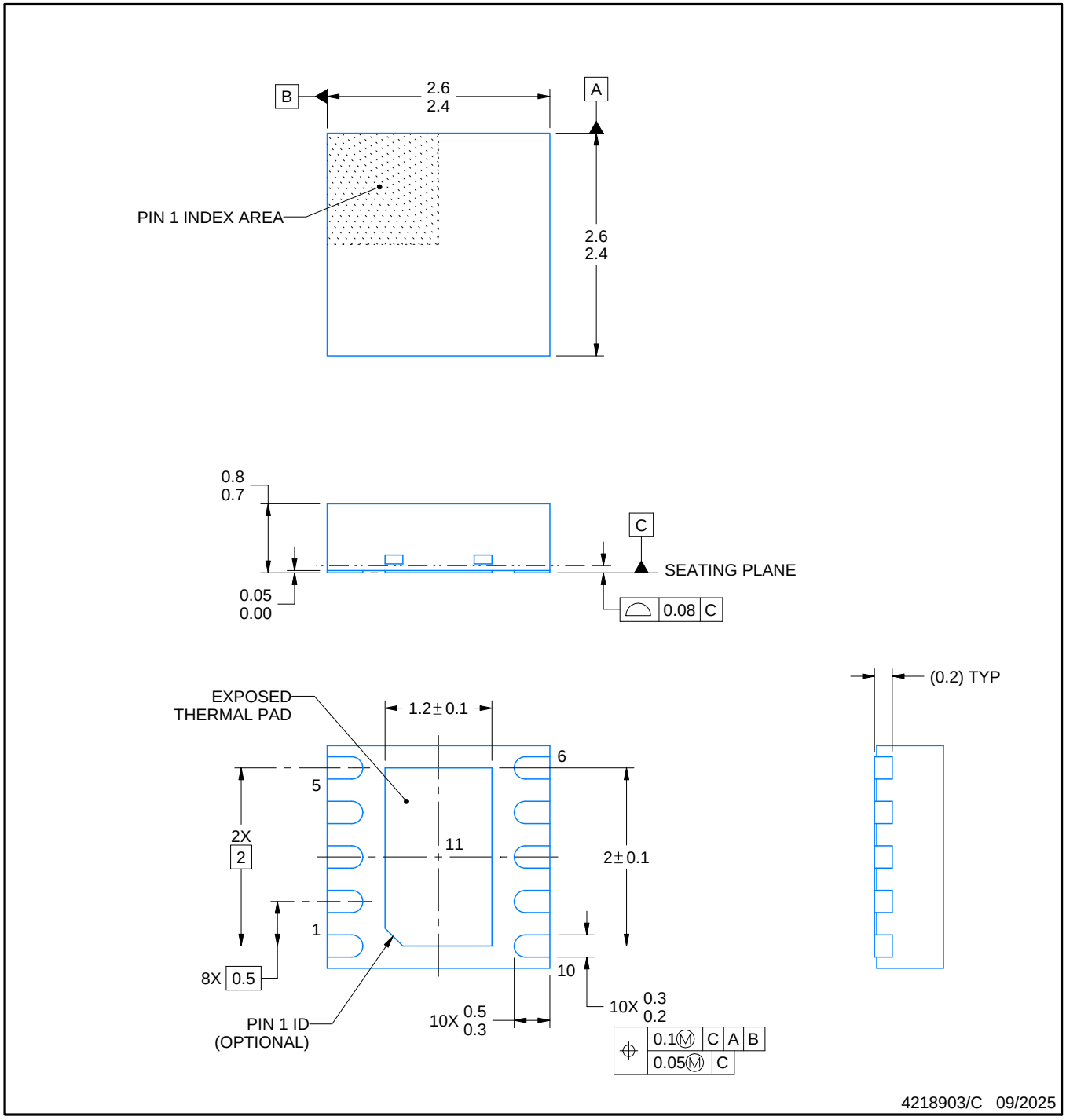

NOTES:

1. All linear dimensions are in millimeters. Any dimensions in parenthesis are for reference only. Dimensioning and tolerancing per ASME Y14.5M.
2. This drawing is subject to change without notice.
3. The package thermal pad must be soldered to the printed circuit board for thermal and mechanical performance.

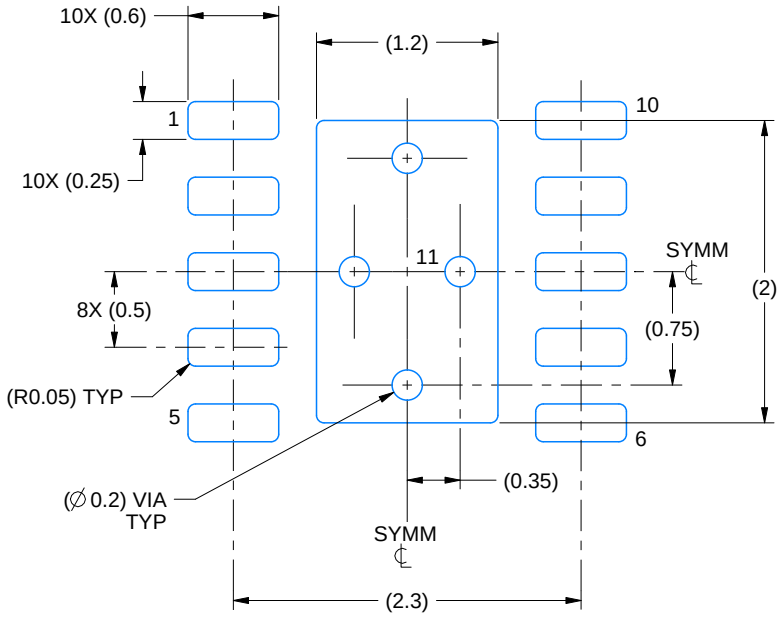

LAND PATTERN EXAMPLE
SCALE:20X

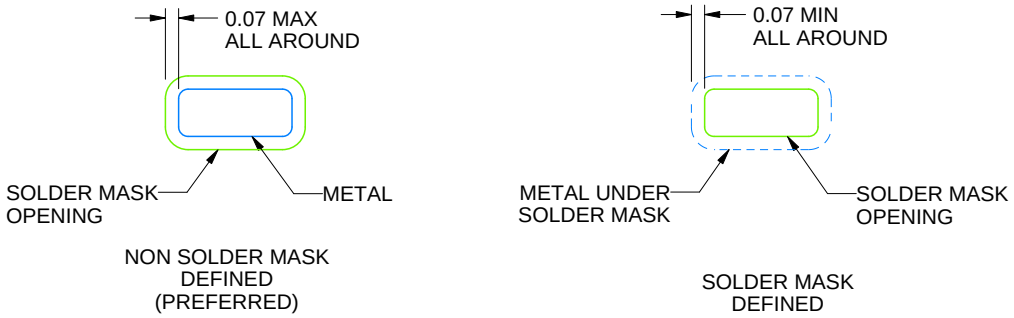

SOLDER MASK DETAILS

4218903/C 09/2025

NOTES: (continued)

4. This package is designed to be soldered to a thermal pad on the board. For more information, see Texas Instruments literature number SLUA271 (www.ti.com/lit/slua271).
5. Vias are optional depending on application, refer to device data sheet. If some or all are implemented, recommended via locations are shown.

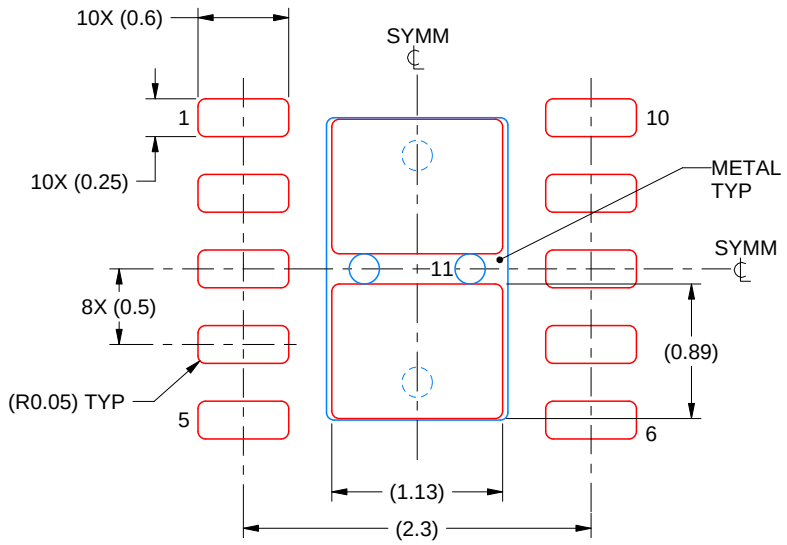

SOLDER PASTE EXAMPLE
BASED ON 0.125 mm THICK STENCIL

EXPOSED PAD 11
84% PRINTED SOLDER COVERAGE BY AREA
SCALE:20X

4218903/C 09/2025

NOTES: (continued)

6. Laser cutting apertures with trapezoidal walls and rounded corners may offer better paste release. IPC-7525 may have alternate design recommendations.

重要通知和免责声明

TI“按原样”提供技术和可靠性数据（包括数据表）、设计资源（包括参考设计）、应用或其他设计建议、网络工具、安全信息和其他资源，不保证没有瑕疵且不做出任何明示或暗示的担保，包括但不限于对适销性、与某特定用途的适用性或不侵犯任何第三方知识产权的暗示担保。

这些资源可供使用 TI 产品进行设计的熟练开发人员使用。您将自行承担以下全部责任：(1) 针对您的应用选择合适的 TI 产品，(2) 设计、验证并测试您的应用，(3) 确保您的应用满足相应标准以及任何其他安全、安保法规或其他要求。

这些资源如有变更，恕不另行通知。TI 授权您仅可将这些资源用于研发本资源所述的 TI 产品的相关应用。严禁以其他方式对这些资源进行复制或展示。您无权使用任何其他 TI 知识产权或任何第三方知识产权。对于因您对这些资源的使用而对 TI 及其代表造成的任何索赔、损害、成本、损失和债务，您将全额赔偿，TI 对此概不负责。

TI 提供的产品受 TI 销售条款)、TI 通用质量指南 或 ti.com 上其他适用条款或 TI 产品随附的其他适用条款的约束。TI 提供这些资源并不会扩展或以其他方式更改 TI 针对 TI 产品发布的适用的担保或担保免责声明。 除非德州仪器 (TI) 明确将某产品指定为定制产品或客户特定产品，否则其产品均为按确定价格收入目录的标准通用器件。

TI 反对并拒绝您可能提出的任何其他或不同的条款。

版权所有 © 2026，德州仪器 (TI) 公司

最后更新日期：2025 年 10 月