Low Quiescent Current, Accurate Programmable-Delay Supervisory Circuit

FEATURES

- **Power-On Reset Generator with Adjustable Delay Time: 1.25ms to 10s**
- **Very Low Quiescent Current: 2.4μA typ**
- **High Threshold Accuracy: 0.5% typ**
- **Fixed Threshold Voltages for Standard Voltage Rails from 0.9V to 5V and Adjustable Voltage Down to 0.4V Are Available**
- **Manual Reset ($\overline{MR}$) Input**
- **Open-Drain $\overline{RESET}$ Output**
- **Temperature Range: –40°C to +125°C**
- **Small SOT23 and 2mm × 2mm QFN Packages**

APPLICATIONS

- **DSP or Microcontroller Applications**
- **Notebook/Desktop Computers**
- **PDAs/Hand-Held Products**
- **Portable/Battery-Powered Products**
- **FPGA/ASIC Applications**

DESCRIPTION

The TPS3818xxx family of microprocessor supervisory circuits monitor system voltages from 0.4V to 5.0V, asserting an open-drain $\overline{RESET}$ signal when the SENSE voltage drops below a preset threshold or when the manual reset ($\overline{MR}$) pin drops to a logic low. The $\overline{RESET}$ output remains low for the user-adjustable delay time after the SENSE voltage and manual reset ($\overline{MR}$) return above the respective thresholds.

The TPS3818 uses a precision reference to achieve 0.5% threshold accuracy for $V_{IT} \leq 3.3V$. The reset delay time can be set to 20ms by disconnecting the C_T pin, 300ms by connecting the C_T pin to V_{DD} using a resistor, or can be user-adjusted between 1.25ms and 10s by connecting the C_T pin to an external capacitor. When used with an external capacitor, the TPS3818xxx gives a more accurate delay time than the similar TPS3808xxx device. The TPS3818 has a very low typical quiescent current of 2.4μA so it is well-suited to battery-powered applications. It is available in either a small SOT23 and an ultra-small 2mm × 2mm QFN PowerPAD™ package, and is fully specified over a temperature range of –40°C to +125°C (T_J).

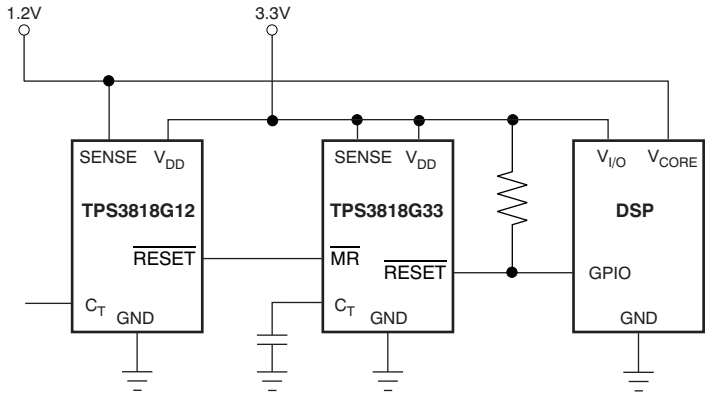

Typical Application Circuit

DBV PACKAGE
SOT23
(TOP VIEW)

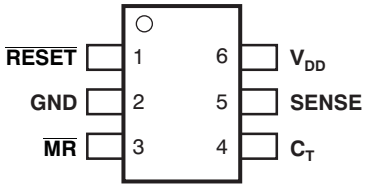

DRV PACKAGE
2mm x 2mm QFN
(TOP VIEW)

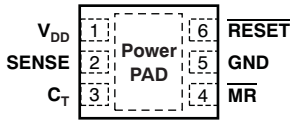

Please be aware that an important notice concerning availability, standard warranty, and use in critical applications of Texas Instruments semiconductor products and disclaimers thereto appears at the end of this data sheet.

PowerPAD is a trademark of Texas Instruments.
All other trademarks are the property of their respective owners.

PRODUCTION DATA information is current as of publication date. Products conform to specifications per the terms of the Texas Instruments standard warranty. Production processing does not necessarily include testing of all parameters.

Copyright © 2008, Texas Instruments Incorporated

This integrated circuit can be damaged by ESD. Texas Instruments recommends that all integrated circuits be handled with appropriate precautions. Failure to observe proper handling and installation procedures can cause damage.

ESD damage can range from subtle performance degradation to complete device failure. Precision integrated circuits may be more susceptible to damage because very small parametric changes could cause the device not to meet its published specifications.

ORDERING INFORMATION(1)

PRODUCT	NOMINAL SUPPLY VOLTAGE(2)	THRESHOLD VOLTAGE (V_{IT})
TPS3818G01	Adjustable	0.405V
TPS3818G09	0.9V	0.84V
TPS3818G12	1.2V	1.12V
TPS3818G125	1.25V	1.16V
TPS3818G15	1.5V	1.40V
TPS3818G18	1.8V	1.67V
TPS3818G25	2.5V	2.33V
TPS3818G30	3.0V	2.79V
TPS3818G33	3.3V	3.07V
TPS3818G50	5.0V	4.65V

(1) For the most current package and ordering information see the Package Option Addendum at the end of this document, or see the TI web site at www.ti.com.
(2) Custom threshold voltages from 0.82V to 3.3V, 4.4V to 5.0V are available through the use of factory EEPROM programming. Minimum order quantities apply. Contact factory for details and availability.

ABSOLUTE MAXIMUM RATINGS(1)

Over operating junction temperature range, unless otherwise noted.

	TPS3818	UNIT
Input voltage range, V_{DD}	–0.3 to 7.0	V
C_T voltage range, V_{CT}	–0.3 to V_{DD} + 0.3	V
Other voltage ranges: V_{RESET}, V_{MR}, V_{SENSE}	–0.3 to 7	V
$\overline{\text{RESET}}$ pin current	5	mA
Operating junction temperature range, T_J(2)	–40 to +150	°C
Storage temperature range, T_{STG}	–65 to +150	°C
ESD rating, HBM	2	kV
ESD rating, CDM	500	V

(1) Stresses beyond those listed under *absolute maximum ratings* may cause permanent damage to the device. These are stress ratings only, and functional operation of the device at these or any other conditions beyond those indicated under the Electrical Characteristics is not implied. Exposure to absolute maximum rated conditions for extended periods may affect device reliability.
(2) As a result of the low dissipated power in this device, it is assumed that $T_J = T_A$.

Copyright © 2008, Texas Instruments Incorporated

ELECTRICAL CHARACTERISTICS

1.7V ≤ V_{DD} ≤ 6.5V, R_{LRESET} = 100kΩ, C_{LRESET} = 50pF, over operating temperature range (T_J = –40°C to +125°C), unless otherwise noted. Typical values are at T_J = +25°C.

PARAMETER			TEST CONDITIONS	MIN	TYP	MAX	UNIT
V_{DD}	Input supply range		–40°C < T_J < +125°C	1.7		6.5	V
			0°C < T_J < +85°C	1.65		6.5	
I_{DD}	Supply current (current into V_{DD} pin)		V_{DD} = 3.3V, $\overline{RESET}$ not asserted $\overline{MR}$, $\overline{RESET}$, C_T open		2.4	5.0	µA
			V_{DD} = 6.5V, $\overline{RESET}$ not asserted $\overline{MR}$, $\overline{RESET}$, C_T open		2.7	6.0	µA
V_{OL}	Low-level output voltage		1.3V ≤ V_{DD} < 1.8V, I_{OL} = 0.4mA			0.3	V
			1.8V ≤ V_{DD} ≤ 6.5V, I_{OL} = 1.0mA			0.4	V
	Power-up reset voltage(1)		V_{OL} (max) = 0.2V, $I_{\overline{RESET}}$ = 15µA			0.8	V
V_{IT}	Negative-going input threshold accuracy	TPS3818G01		–2.0	±1.0	+2.0	%
		V_{IT} ≤ 3.3V		–1.5	±0.5	+1.5	
		3.3V < V_{IT} ≤ 5.0V		–2.0	±1.0	+2.0	
		V_{IT} ≤ 3.3V	–40°C < T_J < +85°C	–1.25	±0.5	+1.25	
		3.3V < V_{IT} ≤ 5.0V	–40°C < T_J < +85°C	–1.5	±0.5	+1.5	
V_{HYS}	Hysteresis on V_{IT} pin	TPS3818G01			1.5	3.0	%V_{IT}
		Fixed versions	–40°C < T_J < +85°C		1.0	2.0	
					1.0	2.5	
$R_{\overline{MR}}$	$\overline{MR}$ Internal pull-up resistance			70	90		kΩ
I_{SENSE}	Input current at SENSE pin	TPS3818G01	V_{SENSE} = V_{IT}	–25		25	nA
		Fixed versions	V_{SENSE} = 6.5V		1.7		µA
I_{OH}	$\overline{RESET}$ leakage current		$V_{\overline{RESET}}$ = 6.5V, $\overline{RESET}$ not asserted			300	nA
C_{IN}	Input capacitance, any pin	C_T pin	V_{IN} = 0V to V_{DD}		5		pF
		Other pins	V_{IN} = 0V to 6.5V		5		
V_{IL}	$\overline{MR}$ logic low input			0		0.3 V_{DD}	V
V_{IH}	$\overline{MR}$ logic high input			0.7 V_{DD}		V_{DD}	
t_w	Input pulse width to $\overline{RESET}$	SENSE	V_{IH} = 1.05V_{IT}, V_{IL} = 0.95V_{IT}		20		µs
		$\overline{MR}$	V_{IH} = 0.7V_{DD}, V_{IL} = 0.3V_{DD}		0.001		
t_d	$\overline{RESET}$ delay time(2)	C_T = Open	See Timing Diagram	12	20	28	ms
		C_T = V_{DD}		180	300	420	ms
V_{CT}	CT pin ($\overline{RESET}$ delay time) comparator threshold(3)			1.211	1.23	1.249	V
I_{CT}	CT pin ($\overline{RESET}$ delay time) charging current(3)		R_{CT}= 2MΩ (resistor between C_T and GND)	190	220	250	nA
t_{pHL}	Propagation delay	$\overline{MR}$ to $\overline{RESET}$	V_{IH} = 0.7V_{DD}, V_{IL} = 0.3V_{DD}		150		ns
	High to low level $\overline{RESET}$ delay	SENSE to $\overline{RESET}$	V_{IH} = 1.05V_{IT}, V_{IL} = 0.95V_{IT}		20		µs
θ_{JA}	Thermal resistance, junction-to-ambient				290		°C/W

(1) The lowest supply voltage (V_{DD}) at which $\overline{RESET}$ becomes active. $T_{rise(VDD)}$ ≥ 15µs/V.
(2) The delay time accuracy without external capacitor is the same as that of the TPS3808xxx. This specification is included here for TPS3808xxx device comparison.
(3) The combined $\overline{RESET}$ delay time accuracy from V_{CT} and I_{CT} is ±15%.

Copyright © 2008, Texas Instruments Incorporated

FUNCTIONAL BLOCK DIAGRAMS

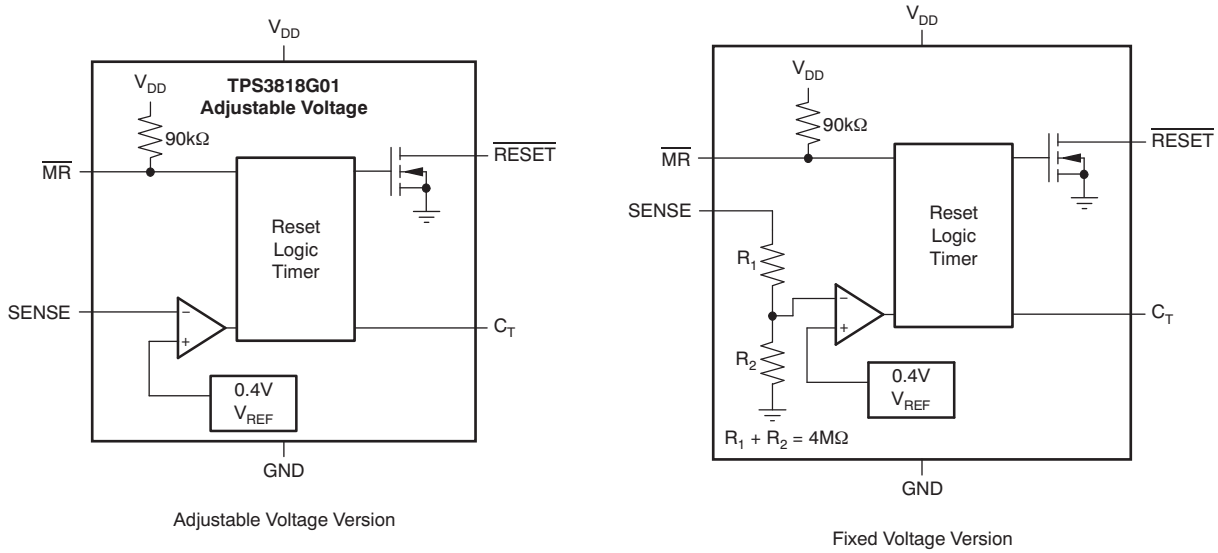

Figure 1. Adjustable and Fixed Voltage Versions

PIN ASSIGNMENTS

DBV PACKAGE
SOT23
(TOP VIEW)

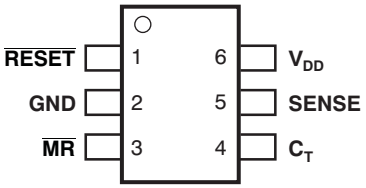

DRV PACKAGE
2mm × 2mm QFN
(TOP VIEW)

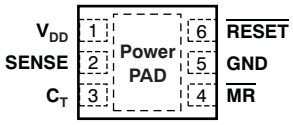

Table 1. TERMINAL FUNCTIONS

TERMINAL		DESCRIPTION
NAME	SOT23 (DBV) PIN NO.	
$\overline{\text{RESET}}$	1	$\overline{\text{RESET}}$ is an open-drain output that is driven to a low impedance state when $\overline{\text{RESET}}$ is asserted (either the SENSE input is lower than the threshold voltage (V_{IT}) or the $\overline{\text{MR}}$ pin is set to a logic low). $\overline{\text{RESET}}$ remains low (asserted) for the reset period after both SENSE is above V_{IT} and $\overline{\text{MR}}$ is set to a logic high. A pull-up resistor from 10kΩ to 1MΩ should be used on this pin, and allows the reset pin to attain voltages higher than V_{DD}.
GND	2	Ground
$\overline{\text{MR}}$	3	Driving the manual reset pin ($\overline{\text{MR}}$) low asserts $\overline{\text{RESET}}$. $\overline{\text{MR}}$ is internally tied to V_{DD} by a 90kΩ pull-up resistor.
C_T	4	Reset period programming pin. Connecting this pin to V_{DD} through a 40kΩ to 200kΩ resistor or leaving it open results in fixed delay times (see Electrical Characteristics). Connecting this pin to a ground referenced capacitor ≥ 100pF gives a user-programmable delay time. See the *Selecting the Reset Delay Time* section for more information.
SENSE	5	This pin is connected to the voltage to be monitored. If the voltage at this terminal drops below the threshold voltage V_{IT}, then $\overline{\text{RESET}}$ is asserted.
V_{DD}	6	Supply voltage. It is good analog design practice to place a 0.1µF ceramic capacitor close to this pin.
PowerPAD		PowerPAD. Connect to ground plane to enhance thermal performance of package.

Copyright © 2008, Texas Instruments Incorporated

TIMING DIAGRAM

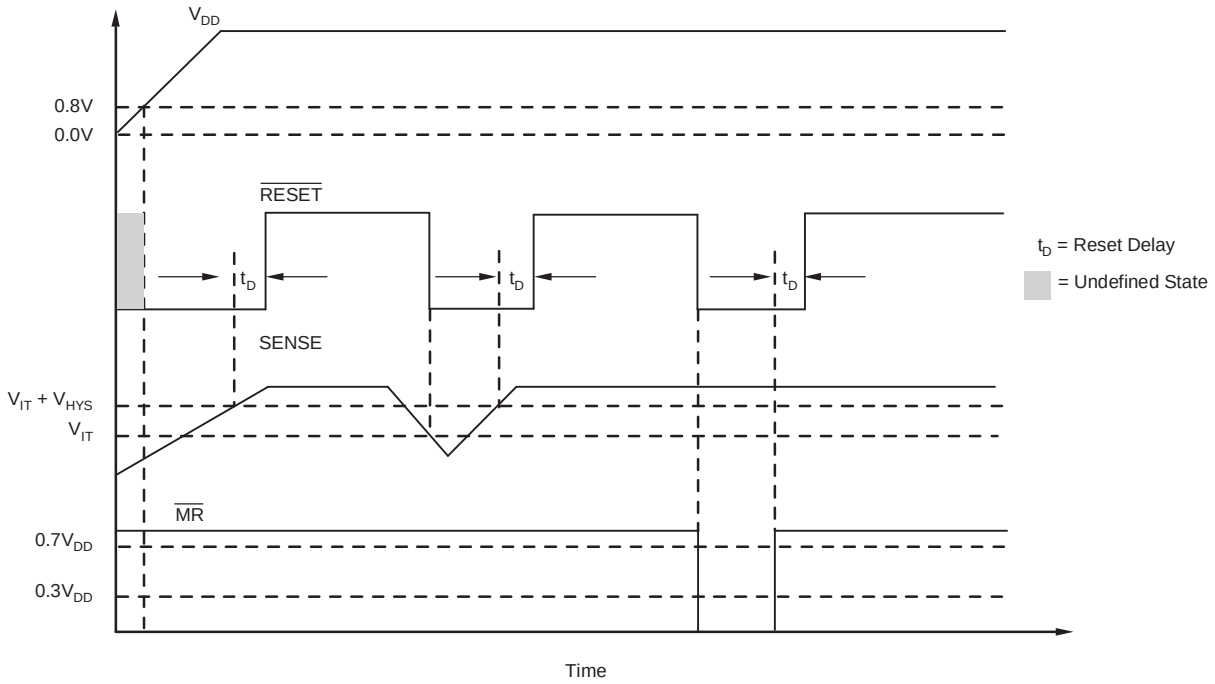

Figure 2. TPS3818 Timing Diagram Showing $\overline{MR}$ and SENSE Reset Timing

TRUTH TABLE

$\overline{MR}$	SENSE > V_{IT}	$\overline{RESET}$
L	0	L
L	1	L
H	0	L
H	1	H

TYPICAL CHARACTERISTICS

At T_J = +25°C, V_{DD} = 3.3V, R_{LRESET} = 100kΩ, and C_{LRESET} = 50pF, unless otherwise noted.

SUPPLY CURRENT vs SUPPLY VOLTAGE

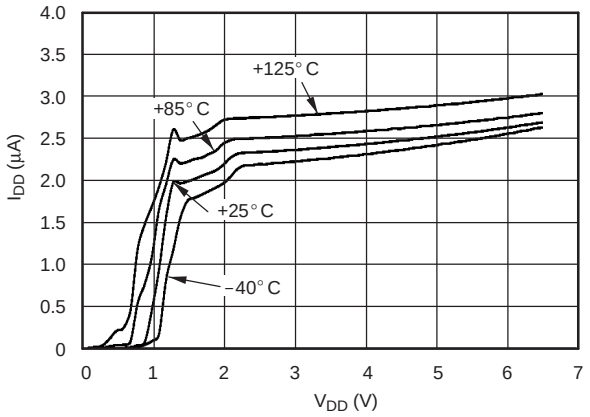

Figure 3.

$\overline{\text{RESET}}$ TIMEOUT PERIOD vs C_T

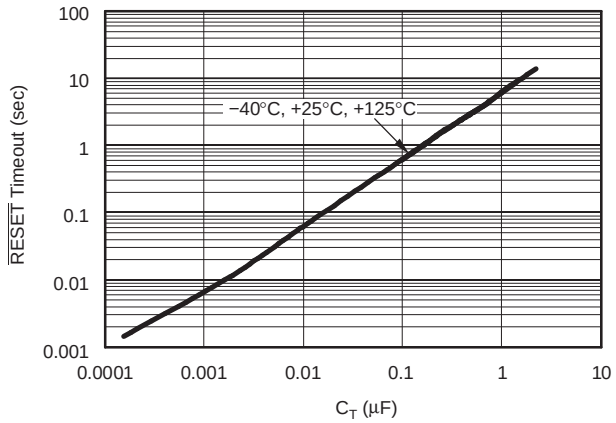

Figure 4.

NORMALIZED $\overline{\text{RESET}}$ TIMEOUT PERIOD vs TEMPERATURE (C_T = OPEN, C_T = V_{DD}, C_T = Any)

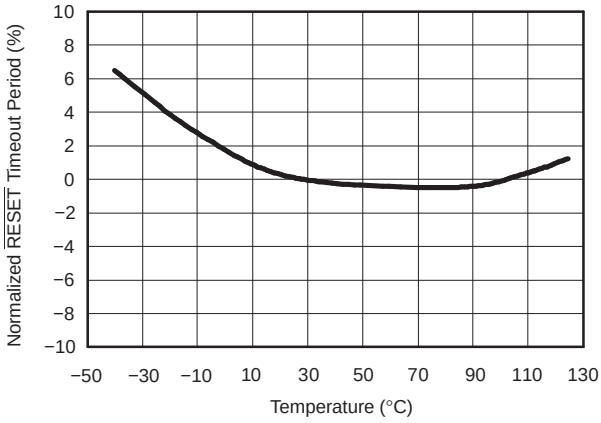

Figure 5.

MAXIMUM TRANSIENT DURATION AT SENSE vs SENSE THRESHOLD OVERDRIVE VOLTAGE

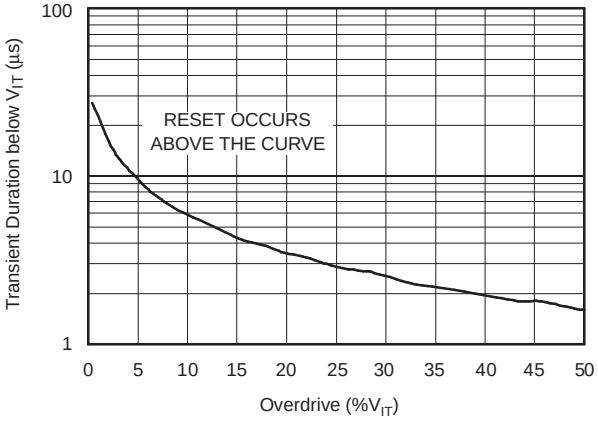

Figure 6.

NORMALIZED SENSE THRESHOLD VOLTAGE (V_{IT}) vs TEMPERATURE

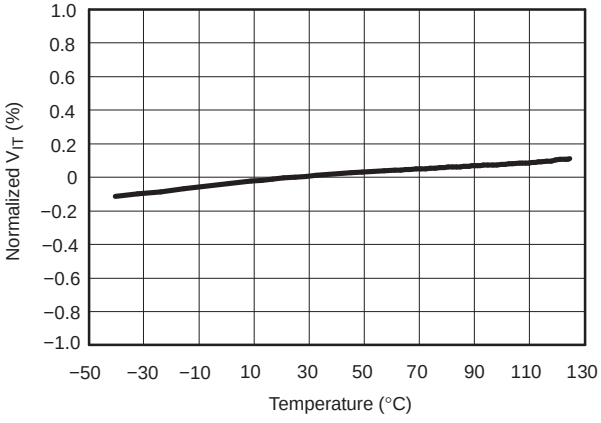

Figure 7.

LOW-LEVEL $\overline{\text{RESET}}$ VOLTAGE vs $\overline{\text{RESET}}$ CURRENT

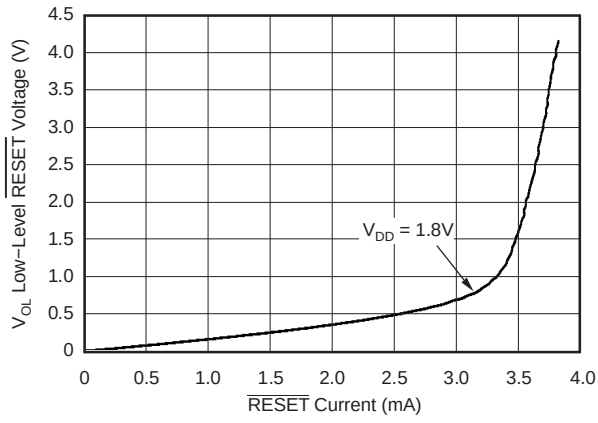

Figure 8.

Copyright © 2008, Texas Instruments Incorporated

TYPICAL CHARACTERISTICS (continued)

At T_J = +25°C, V_{DD} = 3.3V, R_{LRESET} = 100kΩ, and C_{LRESET} = 50pF, unless otherwise noted.

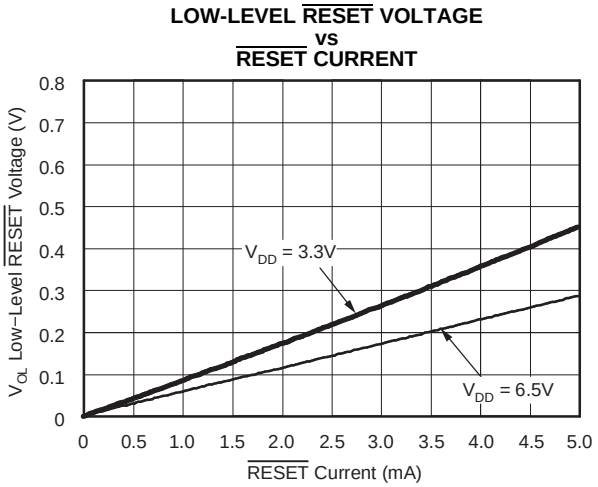

Figure 9.

DEVICE OPERATION

The TPS3818 microprocessor supervisory product family is designed to assert a RESET signal when either the SENSE pin voltage drops below V_{IT} or the manual reset (MR) is driven low. The RESET output remains asserted for a user-adjustable time after both the manual reset (MR) and SENSE voltages return above the respective thresholds. A broad range of voltage threshold and reset delay time adjustments are available, allowing these devices to be used in a wide array of applications. Reset threshold voltages can be factory-set from 0.82V to 3.3V or from 4.4V to 5.0V, while the TPS3818G01 can be set to any voltage above 0.405V using an external resistor divider. Two preset delay times are also user-selectable: connecting the C_T pin to V_{DD} results in a 300ms reset delay, while leaving the C_T pin open yields a 20ms reset delay. In addition, connecting a capacitor between C_T and GND allows the designer to select any reset delay period from 1.25ms to 10s.

RESET OUTPUT

A typical application of the TPS3818G25 used with the OMAP1510 processor is shown in Figure 10. The open-drain RESET output is typically connected to the RESET input of a microprocessor. A pull-up resistor must be used to hold this line high when RESET is not asserted. The RESET output is undefined for voltage below 0.8V, but this is normally not a problem because most microprocessors do not function below this voltage. RESET remains high (unasserted) as long as SENSE is above its threshold (V_{IT}) and the manual reset (MR) is logic high. If either SENSE falls below V_{IT} or MR is driven low, RESET is asserted, driving the RESET pin to a low impedance.

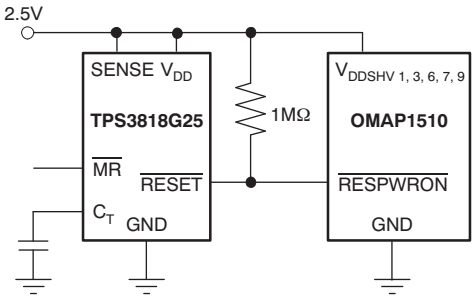

Figure 10. Typical Application of the TPS3818 with an OMAP Processor

Once MR is again logic high and SENSE is above V_{IT} + V_{HYS} (the threshold hysteresis), a delay circuit is enabled that holds RESET low for a specified reset delay period. Once the reset delay has expired, the RESET pin goes to a high impedance state. The pull-up resistor from the open-drain RESET to the supply line can be used to allow the reset signal for the microprocessor to have a voltage higher than V_{DD} (up to 6.5V). The pull-up resistor should be no smaller than 10kΩ as a result of the finite impedance of the RESET line.

SENSE INPUT

The SENSE input provides a terminal at which any system voltage can be monitored. If the voltage on this pin drops below V_{IT}, then RESET is asserted. The comparator has a built-in hysteresis to ensure smooth RESET assertions and de-assertions. It is good analog design practice to put a 1nF to 10nF bypass capacitor on the SENSE input to reduce sensitivity to transients and layout parasitics.

The TPS3818G01 can be used to monitor any voltage rail down to 0.405V using the circuit shown in Figure 11.

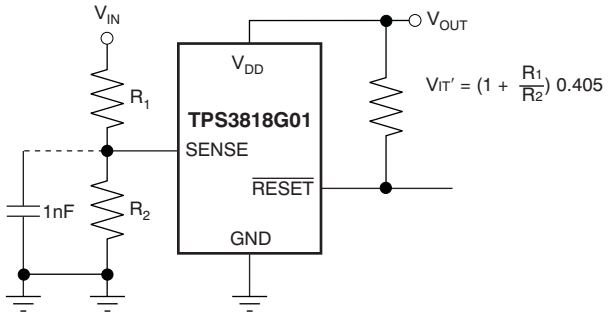

Figure 11. Using the TPS3818G01 to Monitor a User-Defined Threshold Voltage

MANUAL RESET (MR) INPUT

The manual reset (MR) input allows a processor or other logic circuit to initiate a reset. A logic low ($0.3V_{DD}$) on MR causes RESET to assert. After MR returns to a logic high and SENSE is above its reset threshold, RESET is de-asserted after the user-defined reset delay expires. Note that MR is internally tied to V_{DD} using a 90kΩ resistor so this pin can be left unconnected if MR is not used.

See Figure 12 for how MR can be used to monitor multiple system voltages. Note that if the logic signal driving MR does not go fully to V_{DD}, there will be some additional current draw into V_{DD} as a result of the internal pull-up resistor on MR. To minimize current draw, a logic-level FET can be used as illustrated in Figure 13.

Copyright © 2008, Texas Instruments Incorporated

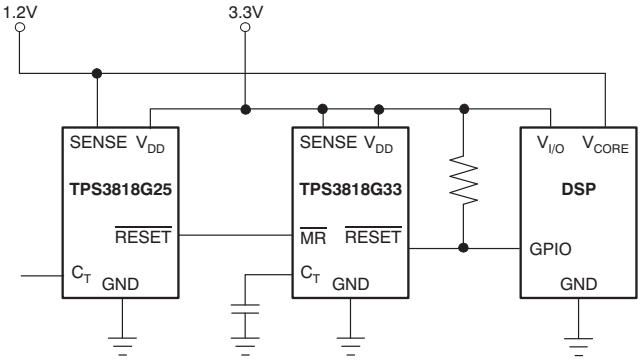

Figure 12. Using $\overline{MR}$ to Monitor Multiple System Voltages

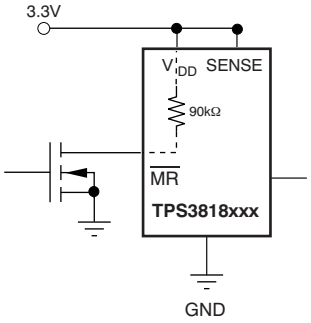

Figure 13. Using an External MOSFET to Minimize I_{DD} When $\overline{MR}$ Signal Does Not Go to V_{DD}

SELECTING THE RESET DELAY TIME

The TPS3818 has three options for setting the $\overline{RESET}$ delay time as shown in Figure 14. Figure 14a shows the configuration for a fixed 300ms typical delay time by tying C_T to V_{DD}; a resistor from 40kΩ to 200kΩ must be used. Supply current is not affected by the choice of resistor. Figure 14b shows a fixed 20ms delay time by leaving the C_T pin open. Figure 14c shows a ground referenced capacitor connected to C_T for a user-defined program time between 1.25ms and 10s.

The capacitor C_T should be ≥ 100pF nominal value in order for the TPS3818xxx to recognize that the capacitor is present. The capacitor value for a given delay time can be calculated using the following equation:

$$C_T\,(nF) = \left[t_D\,(s) - 0.5 \times 10^{-3}\,(s)\right] \times 175 \quad (1)$$

The reset delay time is determined by the time it takes an on-chip precision 220nA current source to charge the external capacitor to 1.23V. When a $\overline{RESET}$ is asserted the capacitor is discharged. When the $\overline{RESET}$ conditions are cleared, the internal current source is enabled and begins to charge the external capacitor. When the voltage on this capacitor reaches 1.23V, $\overline{RESET}$ is de-asserted. Note that a low leakage type capacitor such as a ceramic should be used, and that stray capacitance around this pin may cause errors in the reset delay time.

IMMUNITY TO SENSE PIN VOLTAGE TRANSIENTS

The TPS3818 is relatively immune to short negative transients on the SENSE pin. Sensitivity to transients depends on threshold overdrive, as shown in the *Maximum Transient Duration at Sense vs Sense Threshold Overdrive Voltage* graph (Figure 6) in the Typical Characteristics section.

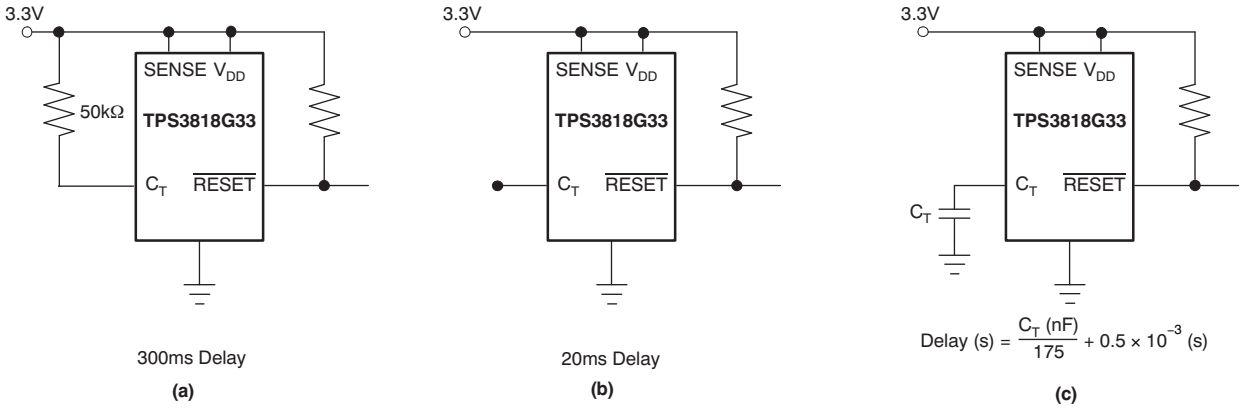

Figure 14. Configuration Used to Set the $\overline{RESET}$ Delay Time

PACKAGING INFORMATION

Orderable part number	Status (1)	Material type (2)	Package | Pins	Package qty | Carrier	RoHS (3)	Lead finish/ Ball material (4)	MSL rating/ Peak reflow (5)	Op temp (°C)	Part marking (6)
TPS3818G25DRVT	Active	Production	WSON (DRV) | 6	250 | SMALL T&R	Yes	NIPDAU	Level-1-260C-UNLIM	-40 to 125	CHJ
TPS3818G25DRVT.B	Active	Production	WSON (DRV) | 6	250 | SMALL T&R	Yes	NIPDAU	Level-1-260C-UNLIM	-40 to 125	CHJ

(1) **Status:** For more details on status, see our product life cycle.

(2) **Material type:** When designated, preproduction parts are prototypes/experimental devices, and are not yet approved or released for full production. Testing and final process, including without limitation quality assurance, reliability performance testing, and/or process qualification, may not yet be complete, and this item is subject to further changes or possible discontinuation. If available for ordering, purchases will be subject to an additional waiver at checkout, and are intended for early internal evaluation purposes only. These items are sold without warranties of any kind.

(3) **RoHS values:** Yes, No, RoHS Exempt. See the TI RoHS Statement for additional information and value definition.

(4) **Lead finish/Ball material:** Parts may have multiple material finish options. Finish options are separated by a vertical ruled line. Lead finish/Ball material values may wrap to two lines if the finish value exceeds the maximum column width.

(5) **MSL rating/Peak reflow:** The moisture sensitivity level ratings and peak solder (reflow) temperatures. In the event that a part has multiple moisture sensitivity ratings, only the lowest level per JEDEC standards is shown. Refer to the shipping label for the actual reflow temperature that will be used to mount the part to the printed circuit board.

(6) **Part marking:** There may be an additional marking, which relates to the logo, the lot trace code information, or the environmental category of the part.

Multiple part markings will be inside parentheses. Only one part marking contained in parentheses and separated by a "~" will appear on a part. If a line is indented then it is a continuation of the previous line and the two combined represent the entire part marking for that device.

Important Information and Disclaimer: The information provided on this page represents TI's knowledge and belief as of the date that it is provided. TI bases its knowledge and belief on information provided by third parties, and makes no representation or warranty as to the accuracy of such information. Efforts are underway to better integrate information from third parties. TI has taken and continues to take reasonable steps to provide representative and accurate information but may not have conducted destructive testing or chemical analysis on incoming materials and chemicals. TI and TI suppliers consider certain information to be proprietary, and thus CAS numbers and other limited information may not be available for release.

In no event shall TI's liability arising out of such information exceed the total purchase price of the TI part(s) at issue in this document sold by TI to Customer on an annual basis.

TAPE AND REEL INFORMATION

REEL DIMENSIONS

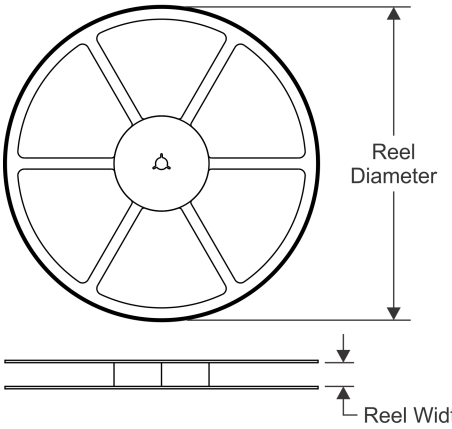

TAPE DIMENSIONS

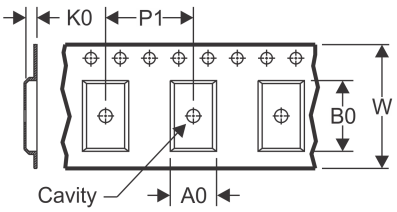

A0	Dimension designed to accommodate the component width
B0	Dimension designed to accommodate the component length
K0	Dimension designed to accommodate the component thickness
W	Overall width of the carrier tape
P1	Pitch between successive cavity centers

QUADRANT ASSIGNMENTS FOR PIN 1 ORIENTATION IN TAPE

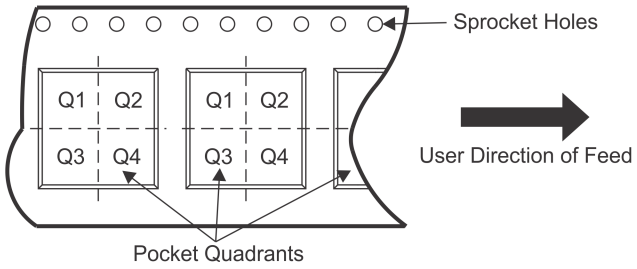

*All dimensions are nominal

Device	Package Type	Package Drawing	Pins	SPQ	Reel Diameter (mm)	Reel Width W1 (mm)	A0 (mm)	B0 (mm)	K0 (mm)	P1 (mm)	W (mm)	Pin1 Quadrant
TPS3818G25DRVT	WSON	DRV	6	250	179.0	8.4	2.2	2.2	1.2	4.0	8.0	Q2

TAPE AND REEL BOX DIMENSIONS

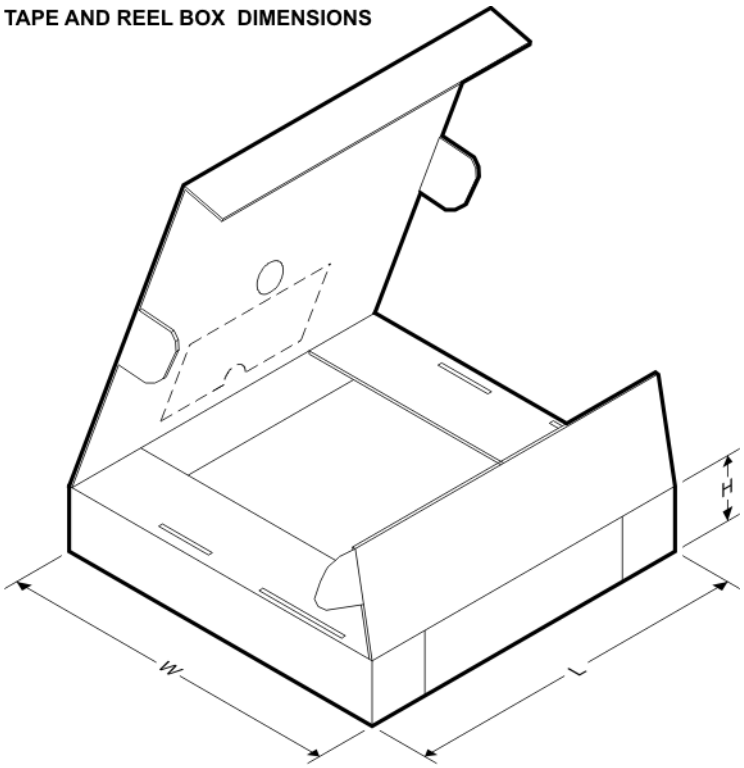

*All dimensions are nominal

Device	Package Type	Package Drawing	Pins	SPQ	Length (mm)	Width (mm)	Height (mm)
TPS3818G25DRVT	WSON	DRV	6	250	203.0	203.0	35.0

DRV 6 WSON - 0.8 mm max height

PLASTIC SMALL OUTLINE - NO LEAD

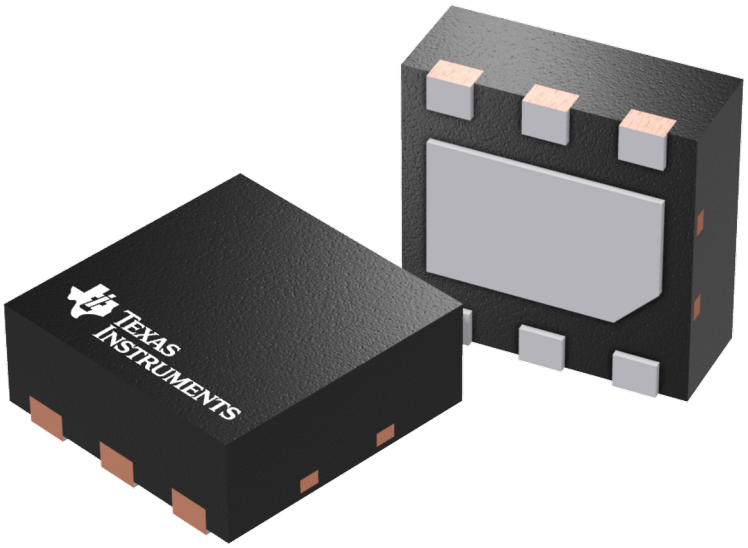

Images above are just a representation of the package family, actual package may vary.
Refer to the product data sheet for package details.

DRV0006D

PACKAGE OUTLINE

WSON - 0.8 mm max height

PLASTIC SMALL OUTLINE - NO LEAD

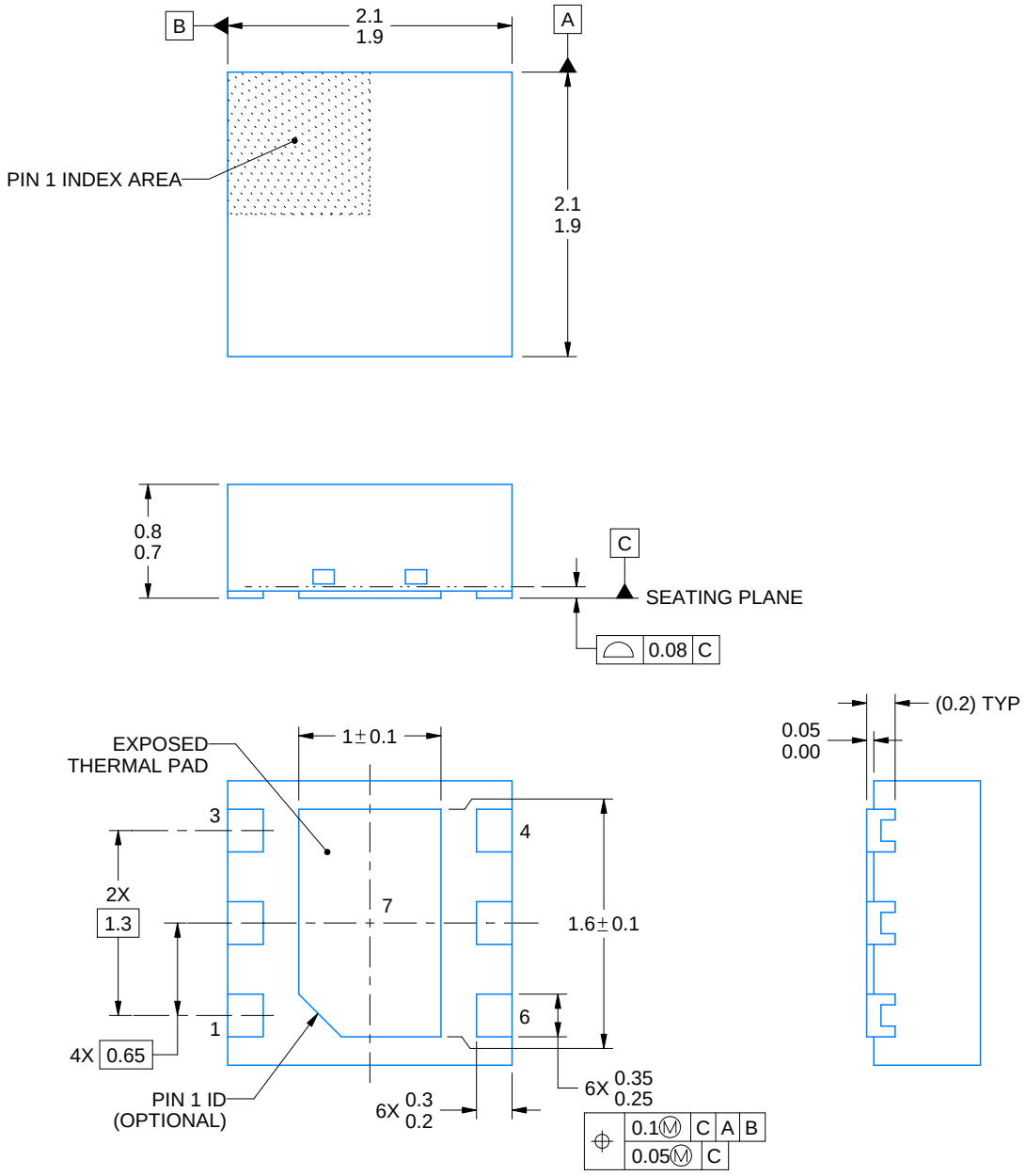

4225563/A 12/2019

NOTES:

1. All linear dimensions are in millimeters. Any dimensions in parenthesis are for reference only. Dimensioning and tolerancing per ASME Y14.5M.
2. This drawing is subject to change without notice.
3. The package thermal pad must be soldered to the printed circuit board for thermal and mechanical performance.

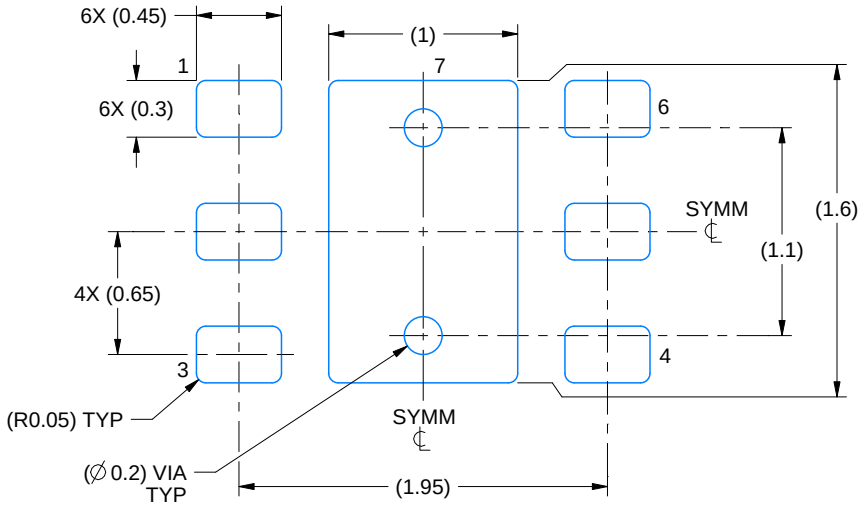

LAND PATTERN EXAMPLE
EXPOSED METAL SHOWN
SCALE:25X

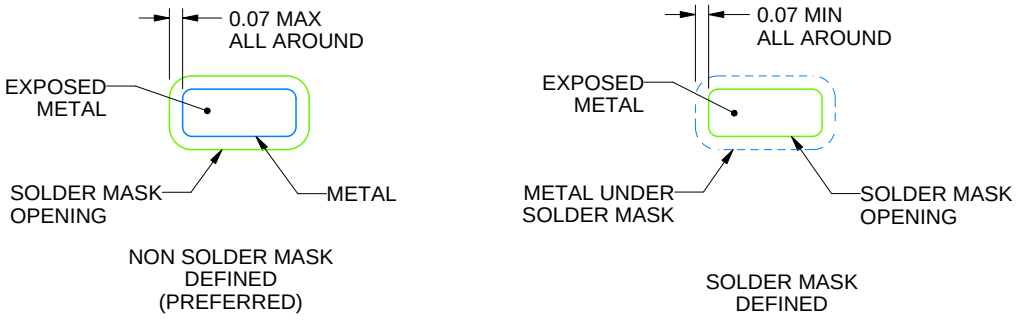

SOLDER MASK DETAILS

4225563/A 12/2019

NOTES: (continued)

4. This package is designed to be soldered to a thermal pad on the board. For more information, see Texas Instruments literature number SLUA271 (www.ti.com/lit/slua271).
5. Vias are optional depending on application, refer to device data sheet. If some or all are implemented, recommended via locations are shown.

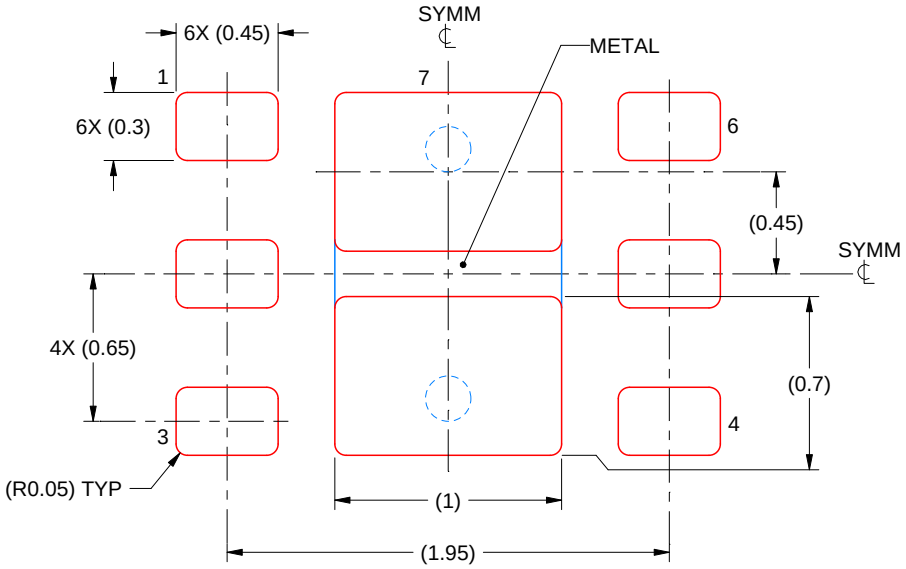

SOLDER PASTE EXAMPLE
BASED ON 0.125 mm THICK STENCIL

EXPOSED PAD #7
88% PRINTED SOLDER COVERAGE BY AREA UNDER PACKAGE
SCALE:30X

4225563/A 12/2019

NOTES: (continued)

6. Laser cutting apertures with trapezoidal walls and rounded corners may offer better paste release. IPC-7525 may have alternate design recommendations.

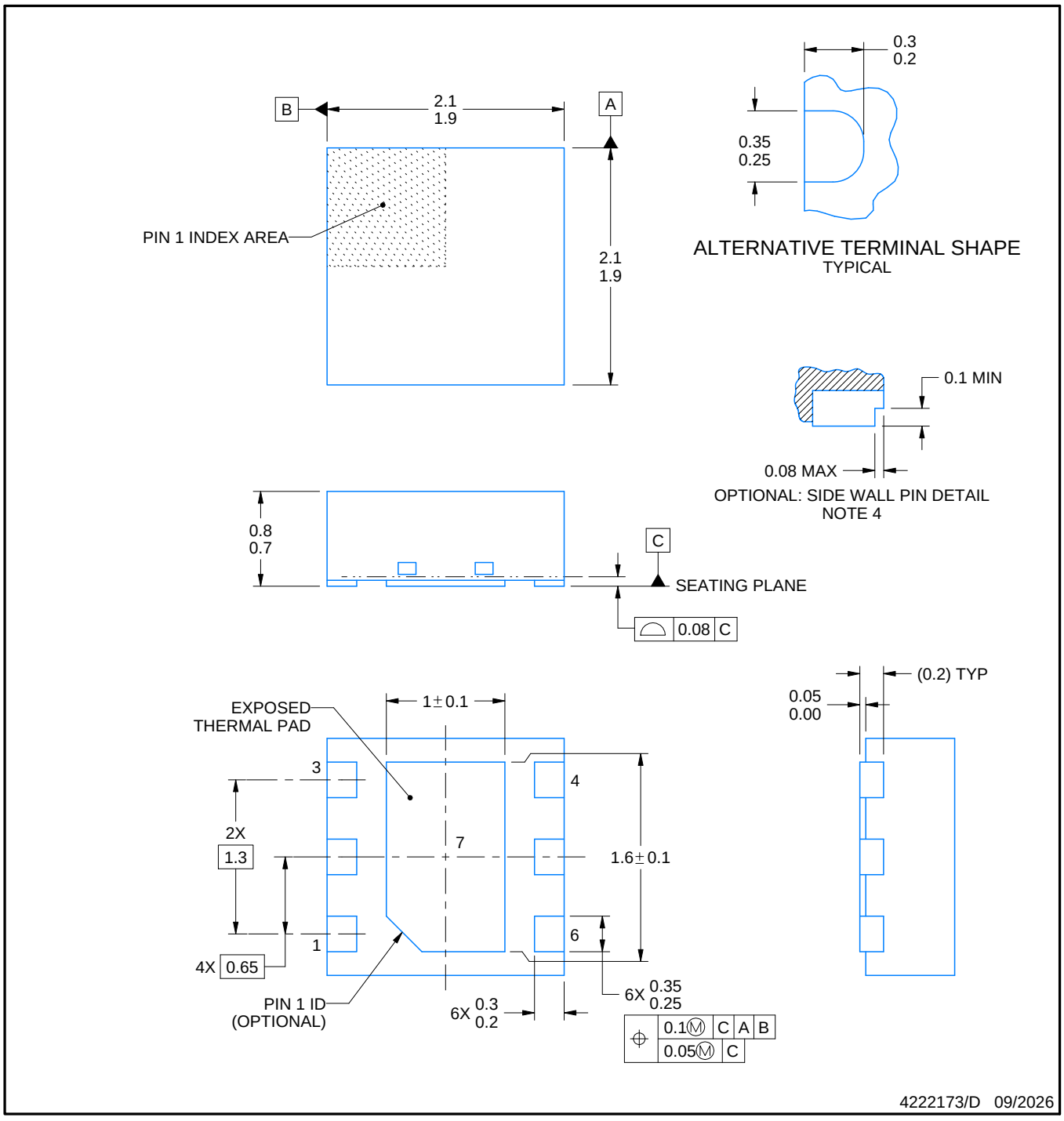

NOTES:

1. All linear dimensions are in millimeters. Any dimensions in parenthesis are for reference only. Dimensioning and tolerancing per ASME Y14.5M.
2. This drawing is subject to change without notice.
3. The package thermal pad must be soldered to the printed circuit board for thermal and mechanical performance.
4. Minimum 0.1 mm solder wetting on pin side wall. Available for wettable flank version only.

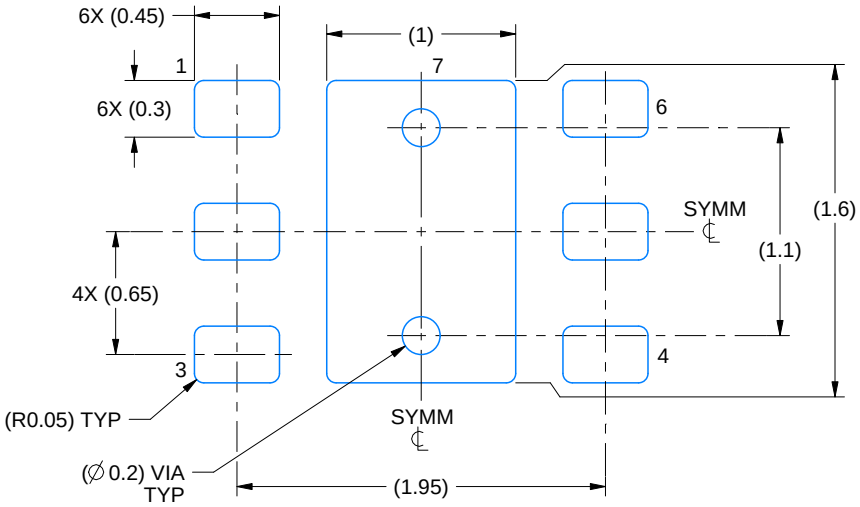

LAND PATTERN EXAMPLE
SCALE:25X

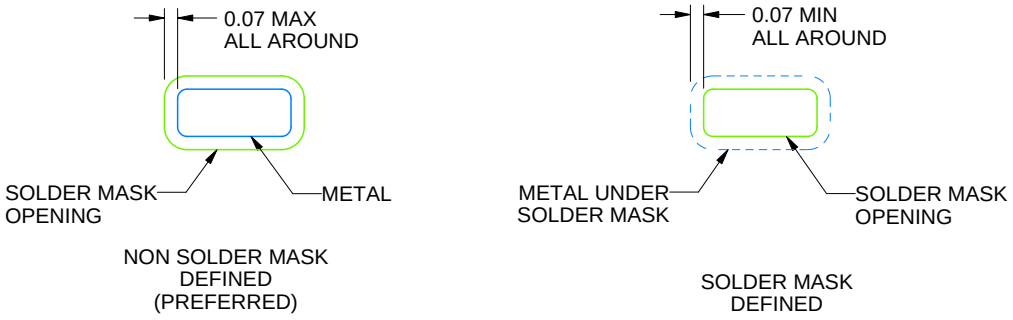

SOLDER MASK DETAILS

4222173/D 09/2026

NOTES: (continued)

5. This package is designed to be soldered to a thermal pad on the board. For more information, see Texas Instruments literature number SLUA271 (www.ti.com/lit/slua271).
6. Vias are optional depending on application, refer to device data sheet. If some or all are implemented, recommended via locations are shown.

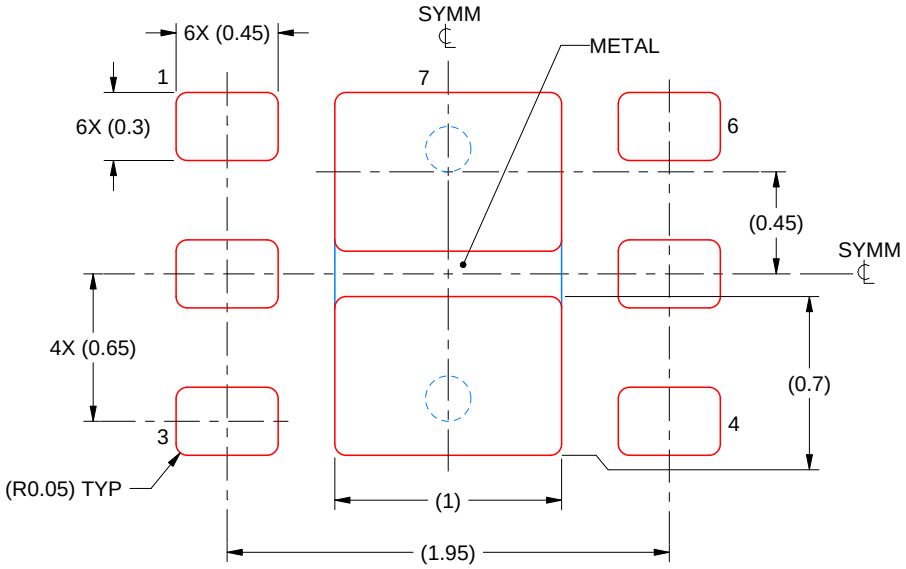

SOLDER PASTE EXAMPLE
BASED ON 0.125 mm THICK STENCIL

EXPOSED PAD #7
88% PRINTED SOLDER COVERAGE BY AREA UNDER PACKAGE
SCALE:30X

4222173/D 09/2026

NOTES: (continued)

7. Laser cutting apertures with trapezoidal walls and rounded corners may offer better paste release. IPC-7525 may have alternate design recommendations.

IMPORTANT NOTICE AND DISCLAIMER

TI PROVIDES TECHNICAL AND RELIABILITY DATA (INCLUDING DATASHEETS), DESIGN RESOURCES (INCLUDING REFERENCE DESIGNS), APPLICATION OR OTHER DESIGN ADVICE, WEB TOOLS, SAFETY INFORMATION, AND OTHER RESOURCES “AS IS” AND WITH ALL FAULTS, AND DISCLAIMS ALL WARRANTIES, EXPRESS AND IMPLIED, INCLUDING WITHOUT LIMITATION ANY IMPLIED WARRANTIES OF MERCHANTABILITY, FITNESS FOR A PARTICULAR PURPOSE OR NON-INFRINGEMENT OF THIRD PARTY INTELLECTUAL PROPERTY RIGHTS.

These resources are intended for skilled developers designing with TI products. You are solely responsible for (1) selecting the appropriate TI products for your application, (2) designing, validating and testing your application, and (3) ensuring your application meets applicable standards, and any other safety, security, regulatory or other requirements.

These resources are subject to change without notice. TI grants you permission to use these resources only for development of an application that uses the TI products described in the resource. Other reproduction and display of these resources is prohibited. No license is granted to any other TI intellectual property right or to any third party intellectual property right. TI disclaims responsibility for, and you fully indemnify TI and its representatives against any claims, damages, costs, losses, and liabilities arising out of your use of these resources.

TI’s products are provided subject to TI’s Terms of Sale, TI’s General Quality Guidelines, or other applicable terms available either on ti.com or provided in conjunction with such TI products. TI’s provision of these resources does not expand or otherwise alter TI’s applicable warranties or warranty disclaimers for TI products. Unless TI explicitly designates a product as custom or customer-specified, TI products are standard, catalog, general purpose devices.

TI objects to and rejects any additional or different terms you may propose.

Copyright © 2026, Texas Instruments Incorporated

Last updated 10/2025