TPS65216 Power Management IC (PMIC) With 4 DC/DC Converters, 1 LDO, and Integrated Power Sequencing

1 Features

- Three adjustable step-down converters with integrated switching FETs (DCDC1, DCDC2, and DCDC3):
  - DCDC1: 1.1V default, up to 1.8A
  - DCDC2: 1.1V default, up to 1.8A
  - DCDC3: 1.1V default, up to 1.8A
  - VIN range from 2.7V to 5.5V
  - Adjustable output voltage range 0.85V to 1.675V (DCDC1 and DCDC2)
  - Adjustable output voltage range 0.9V to 3.4V (DCDC3)
  - Power save mode at light load current
  - 100% duty cycle for lowest dropout
  - Active output-discharge when disabled
- One adjustable buck-boost converter with integrated switching FETs (DCDC4):
  - DCDC4: 3.3V default, up to 1.6A
  - VIN range from 2.7V to 5.5V
  - Adjustable output voltage range from 1.175V to 3.4V
  - Active output-discharge when disabled
- Adjustable general-purpose LDO (LDO1)
  - LDO1: default up to 400mA
  - VIN range from 1.8V to 5.5V
  - Adjustable output voltage range from 0.9V to 3.4V
  - Active output-discharge when disabled
- High-voltage load switch (LS) With 100mA or 500mA selectable current limit
  - VIN range from 1.8V to 10V
  - 500mΩ (max) switch impedance
- Supervisor with built-in supervisor function monitors
  - DCDC1, DCDC2 ±4% tolerance
  - DCDC3, DCDC4 ±5% tolerance
  - LDO1 ±5% tolerance
- Protection, diagnostics, and control:
  - Undervoltage lockout (UVLO)
  - Always-on push-button monitor
  - Overtemperature warning and shutdown
  - I^2C interface (address 0x24) (see *Timing Requirements* for I^2C operation at 400kHz)

2 Applications

- Grid Infrastructure
- Human-Machine Interface (HMI)
- Industrial Automation
- Electronic Point of Sale (ePOS)
- Test and Measurement
- Industrial Communications
- Backplane I/O
- Connected Industrial Drives

3 Description

The TPS65216 is a single chip, power-management IC (PMIC) specifically designed to support the AMIC110, AMIC120, AM335x, and AM437x line of processors in line-powered (5V) applications. The device is characterized across a –40°C to +105°C temperature range, making it suitable for various industrial applications.

The TPS65216 is specifically designed to provide power management for all the functionalities of the AMIC110, AMIC120, AM335x, and AM437x. The DC/DC converters DCDC1 through DCDC4 are intended to power the core, MPU, DDR memory, and 3.3V analog and I/O, respectively. LDO1 provides the 1.8V analog and I/O for the processor. GPIO2 allows for warm reset of the DCDC1 and DCDC2 converters. The I^2C interface allows the user to enable and disable all voltage regulators, the load switch, and GPIOs. Additionally, UVLO and supervisor voltage thresholds, power-up sequence, and power-down sequence can be programmed through I^2C. Interrupts for overtemperature, overcurrent, and undervoltage can be monitored as well. The supervisor monitors DCDC1 through DCDC4 and LDO1. The supervisor has two settings, one for typical undervoltage tolerance (STRICT = 0b), and one for tight undervoltage and overvoltage tolerances (STRICT = 1b). A power-good signal indicates proper regulation of the five voltage regulators.

An IMPORTANT NOTICE at the end of this data sheet addresses availability, warranty, changes, use in safety-critical applications, intellectual property matters and other important disclaimers. PRODUCTION DATA.

Three hysteretic step-down converters are targeted at providing power for the processor core, MPU, and DDRx memory. The default output voltages for each converter can be adjusted through the I^2C interface. DCDC1 and DCDC2 feature dynamic voltage scaling to provide power at all operating points of the processor. DCDC1 and DCDC2 also have programmable slew rates to help protect processor components. DCDC3 remains powered while the processor is in SUSPEND mode to maintain power to DDRx memory.

The TPS65216 device is available in a 48-pin VQFN package (6mm × 6mm, 0.4mm pitch).

Device Information

PART NUMBER	PACKAGE(1)	BODY SIZE (NOM)
TPS65216	VQFN (48)	6.00mm × 6.00mm

(1) For all available packages, see the orderable addendum at the end of the data sheet.

Copyright © 2026 Texas Instruments Incorporated

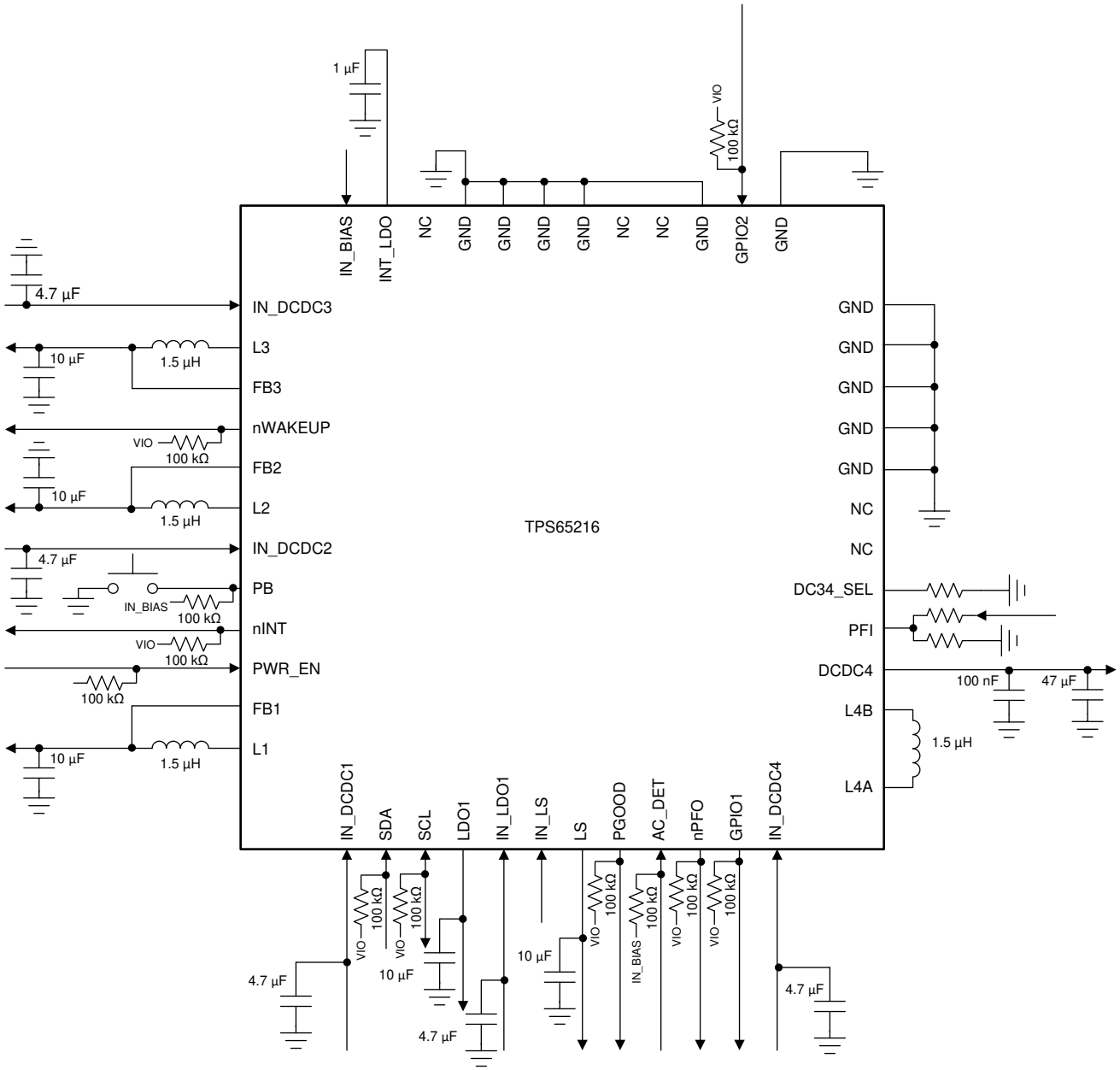

Copyright © 2018, Texas Instruments Incorporated

Simplified Schematic

Table of Contents

1 Features....1
2 Applications....1
3 Description....1
4 Pin Configuration and Functions....5
5 Specifications....7
5.1 Absolute Maximum Ratings....7
5.2 ESD Ratings....7
5.3 Recommended Operating Conditions....7
5.4 Thermal Information....8
5.5 Electrical Characteristics....8
5.6 Timing Requirements....15
5.7 Typical Characteristics....16
6 Detailed Description....17
6.1 Overview....17
6.2 Functional Block Diagram....18
6.3 Feature Description....19
6.4 Device Functional Modes....37
7 Register Maps....39
8 Application and Implementation....77
8.1 Application Information....77
8.2 Typical Application....77
8.3 Power Supply Recommendations....80
8.4 Layout....80
9 Device and Documentation Support....82
9.1 Device Support....82
9.2 Documentation Support....82
9.3 Receiving Notification of Documentation Updates....82
9.4 Support Resources....82
9.5 Trademarks....82
9.6 Electrostatic Discharge Caution....82
9.7 Glossary....82
10 Revision History....83
11 Mechanical, Packaging, and Orderable Information....83
11.1 Package Option Addendum....84

Copyright © 2026 Texas Instruments Incorporated

4 Pin Configuration and Functions

Figure 4-1 shows the 48-pin RSL Plastic Quad Flatpack No-Lead.

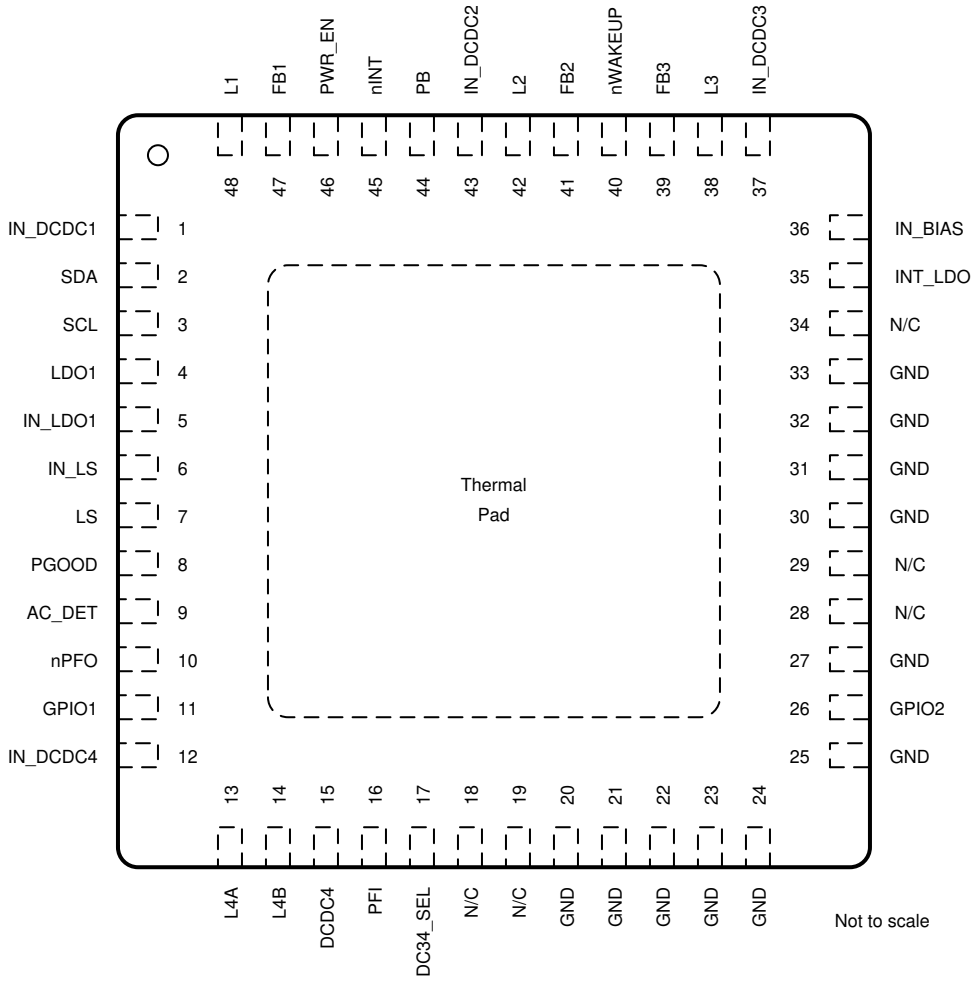

Figure 4-1. 48-Pin RSL VQFN With Exposed Thermal Pad (Top View, 6 mm × 6 mm × 1 mm With 0.4-mm Pitch)

Table 4-1. Pin Functions

PIN		TYPE	DESCRIPTION
NO.	NAME		
1	IN_DCDC1	P	Input supply pin for DCDC1.
2	SDA	I/O	Data line for the I^2C interface. Connect to pullup resistor.
3	SCL	I	Clock input for the I^2C interface. Connect to pullup resistor.
4	LDO1	O	Output voltage pin for LDO1. Connect to capacitor.
5	IN_LDO1	P	Input supply pin for LDO1.
6	IN_LS	P	Input supply pin for the load switch.
7	LS	O	Output voltage pin for the load switch. Connect to capacitor.
8	PGOOD	O	Power-good output (configured as open drain). Pulled low when either DCDC1-4 or LDO1 are out of regulation. Load switch does not affect PGOOD pin.
9	AC_DET	I	AC monitor input and enable for DCDC1-4, LDO1 and load switch. See Modes of Operation for details. Tie pin to IN_BIAS if not used.
10	nPFO	O	Power-fail comparator output, deglitched (open drain). Pin is pulled low when PFI input is below power-fail threshold.

Copyright © 2026 Texas Instruments Incorporated

Table 4-1. Pin Functions (continued)

PIN		TYPE	DESCRIPTION
NO.	NAME		
11	GPIO1	I/O	General-purpose, open-drain output. See I/O Configuration for more information.
12	IN_DCDC4	P	Input supply pin for DCDC4.
13	L4A	P	Switch pin for DCDC4. Connect to inductor.
14	L4B	P	Switch pin for DCDC4. Connect to inductor.
15	DCDC4	P	Output voltage pin for DCDC4. Connect to capacitor.
16	PFI	I	Power-fail comparator input. Connect to resistor divider.
17	DC34_SEL	I	Power-up default selection pin for DCDC3 or DCDC4. Power-up default is programmed by a resistor connected to ground. See DCDC3 and DCDC4 Power-Up Default Selection for resistor options.
18	N/C	–	No connect. Leave pin floating.
19	N/C	–	No connect. Leave pin floating.
20	GND	—	Connect pin to ground.
21	GND		
22	GND		
23	GND		
24	GND		
25	GND		
26	GPIO2	I/O	Pin can be configured as warm reset (negative edge) for DCDC1 and DCDC2 or as a general-purpose, open-drain output. See I/O Configuration for more details.
27	GND	–	Connect pin to ground.
28	N/C	—	No connect. Leave pin floating.
29	N/C		
30	GND	—	Connect pin to ground.
31	GND		
32	GND		
33	GND		
34	N/C	–	No connect. Leave pin floating.
35	INT_LDO	P	Internal bias voltage. Connect to a 1-µF capacitor. TI does not recommended connecting any external load to this pin.
36	IN_BIAS	P	Input supply pin for reference system.
37	IN_DCDC3	P	Input supply pin for DCDC3.
38	L3	P	Switch pin for DCDC3. Connect to inductor.
39	FB3	I	Feedback voltage pin for DCDC3. Connect to output capacitor.
40	nWAKEUP	O	Signal to SOC to indicate a power on event (active low, open-drain output).
41	FB2	I	Feedback voltage pin for DCDC2. Connect to output capacitor.
42	L2	P	Switch pin for DCDC2. Connect to inductor.
43	IN_DCDC2	P	Input supply pin for DCDC2.
44	PB	I	Push-button monitor input. Typically connected to a momentary switch to ground (active low). See Modes of Operation for details.
45	nINT	O	Interrupt output (active low, open drain). Pin is pulled low if an interrupt bit is set. The pin returns to Hi-Z state after the bit causing the interrupt has been read. Interrupts can be masked.
46	PWR_EN	I	Power enable input for DCDC1-4, LDO1 and load switch. See Modes of Operation for details.
47	FB1	I	Feedback voltage pin for DCDC1. Connect to output capacitor.
48	L1	P	Switch pin for DCDC1. Connect to inductor.
—	Thermal Pad	P	Power ground and thermal relief. Connect to ground plane.

Copyright © 2026 Texas Instruments Incorporated

5 Specifications

5.1 Absolute Maximum Ratings

Operating under free-air temperature range (unless otherwise noted).(1)

			MIN	MAX	UNIT
	Supply voltage	IN_BIAS, IN_LDO1, IN_DCDC1, IN_DCDC2, IN_DCDC3, IN_DCDC4	–0.3	7	V
		IN_LS	–0.3	11.2	
	Input voltage	All pins unless specified separately	–0.3	7	V
	Output voltage	All pins unless specified separately	–0.3	7	V
	Sink current	PGOOD, nWAKEUP, nINT, nPFO, SDA, GPIO1, GPIO2		6	mA
T_A	Operating ambient temperature		–40	105	°C
T_J	Junction temperature		–40	125	°C
T_{stg}	Storage temperature		–65	150	°C

(1) Stresses beyond those listed under *Absolute Maximum Ratings* may cause permanent damage to the device. These are stress ratings only and functional operation of the device at these or any other conditions beyond those indicated under *Recommended Operating Conditions* is not implied. Exposure to absolute-maximum-rated conditions for extended periods may affect device reliability.

5.2 ESD Ratings

			VALUE	UNIT
$V_{(ESD)}$	Electrostatic discharge	Human-body model (HBM), per ANSI/ESDA/JEDEC JS-001(1)	±2000	V
		Charged-device model (CDM), per JEDEC specification JESD22-C101(2)	±500	

(1) JEDEC document JEP155 states that 500-V HBM allows safe manufacturing with a standard ESD control process.
(2) JEDEC document JEP157 states that 250-V CDM allows safe manufacturing with a standard ESD control process.

5.3 Recommended Operating Conditions

Over operating free-air temperature range (unless otherwise noted).

		MIN	NOM	MAX	UNIT
Supply voltage, IN_BIAS		2.7		5.5	V
Input voltage for DCDC1, DCDC2, DCDC3, and DCDC4		2.7		5.5	V
Input voltage for LDO1		1.8		5.5	V
Input voltage for LS		1.8		10	V
Output voltage for DCDC1		0.85		1.675	V
Output voltage for DCDC2		0.85		1.675	V
Output voltage for DCDC3		0.9		3.4	V
Output voltage for DCDC4		1.175		3.4	V
Output voltage for LDO1		0.9		3.4	V
Output current for DCDC1, DCDC2, and DCDC3		0		1.8	A
Output current for DCDC4	VIN_DCDC4 = 2.8 V			1	A
	VIN_DCDC4 = 3.6 V			1.3	
	VIN_DCDC4 = 5 V			1.6	
Output current for LDO1		0		400	mA
Output current for LS	VIN_LS > 2.3 V	0		900	mA
	VIN_LS ≤ 2.3 V	0		475	

Copyright © 2026 Texas Instruments Incorporated

5.4 Thermal Information

THERMAL METRIC[1]		TPS65216 RSL (VQFN) 48 PINS	UNIT
$R_{\theta JC(top)}$	Junction-to-case (top)	17.2	°C/W
$R_{\theta JB}$	Junction-to-board	5.8	°C/W
$R_{\theta JA}$	Thermal resistance, junction-to-ambient. JEDEC 4-layer, high-K board.	30.6	°C/W
Ψ_{JT}	Junction-to-package top	0.2	°C/W
Ψ_{JB}	Junction-to-board	5.6	°C/W
$R_{\theta JC(bot)}$	Junction-to-case (bottom)	1.5	°C/W

(1) For more information about traditional and new thermal metrics, see the *Semiconductor and IC Package Thermal Metrics* application report.

5.5 Electrical Characteristics

Over operating free-air temperature range (unless otherwise noted).

PARAMETER		TEST CONDITIONS	MIN	TYP	MAX	UNIT
INPUT VOLTAGE AND CURRENTS						
V_{IN_BIAS}	Input supply voltage range	Normal operation	2.7		5.5	V
		EEPROM programming	4.5		5.5	
	Deglitch time			5		ms
I_{OFF}	OFF state current, total current into IN_BIAS, IN_DCDCx, IN_LDO1, IN_LS	V_{IN} = 3.6 V; All rails disabled. T_J = 0°C to 85°C		5		µA
$I_{SUSPEND}$	SUSPEND current, total current into IN_BIAS, IN_DCDCx, IN_LDO1, IN_LS	V_{IN} = 3.6 V; DCDC3 enabled, low-power mode, no load. All other rails disabled. T_J = 0°C to 105°C		220		µA
INT_LDO						
V_{INT_LDO}	Output voltage			2.5		V
	DC accuracy	I_{OUT} < 10 mA	–2%		2%	
I_{OUT}	Output current range	Maximum allowable external load	0		10	mA
I_{LIMIT}	Short circuit current limit	Output shorted to GND		23		mA
t_{HOLD}	Hold-up time	Measured from V_{INT_LDO} = to V_{INT_LDO} = 1.8 V All rails enabled before power off, V_{IN_BIAS} = 2.8 V to 0 V in < 5 µs No external load on INT_LDO C_{INT_LDO} = 1 µF, see Table 8-3.	150			ms
C_{OUT}	Nominal output capacitor value	Ceramic, X5R or X7R, see Table 8-3.	0.1	1	22	µF
	Tolerance	Ceramic, X5R or X7R, rated voltage ≥ 6.3 V	–20%		20%	
DCDC1 (1.1-V BUCK)						
V_{IN_DCDC1}	Input voltage range	V_{IN_BIAS} > V_{UVLO}	2.7		5.5	V
V_{DCDC1}	Output voltage range	Adjustable through I^2C	0.85		1.675	V
	DC accuracy	2.7 V ≤ V_{IN} ≤ 5.5 V; 0 A ≤ I_{OUT} ≤ 1.8 A	–2%		2%	
	Dynamic accuracy	In respect to nominal output voltage I_{OUT} = 50 mA to 450 mA in < 1 µs C_{OUT} ≥ 10 µF, over full input voltage range.	–2.5%		2.5%	
I_{OUT}	Continuous output current	V_{IN_DCDC1} > 2.7 V			1.8	A
I_Q	Quiescent current	Total current from I_{N_DCDC1} pin; Device not switching, no load		25	50	µA

Copyright © 2026 Texas Instruments Incorporated

5.5 Electrical Characteristics (continued)

Over operating free-air temperature range (unless otherwise noted).

PARAMETER		TEST CONDITIONS		MIN	TYP	MAX	UNIT
$R_{DS(ON)}$	High-side FET on resistance	V_{IN_DCDC1} = 3.6 V			230	355	mΩ
	Low-side FET on resistance	V_{IN_DCDC1} = 3.6 V			90	145	
I_{LIMIT}	High-side current limit	V_{IN_DCDC1} = 3.6 V			2.8		A
	Low-side current limit	V_{IN_DCDC1} = 3.6 V			3.1		
V_{PG}	Power-good threshold	V_{OUT} falling	STRICT = 0b	88.5%	90%	91.5%	
			STRICT = 1b	96%	96.5%	97%	
	Hysteresis	V_{OUT} rising	STRICT = 0b	3.8%	4.1%	4.4%	
			STRICT = 1b		0.25%		
	Deglitch	V_{OUT} falling	STRICT = 0b		1		ms
			STRICT = 1b		50		µs
		V_{OUT} rising	STRICT = 0b		10		µs
			STRICT = 1b		10		µs
	Time-out				5		ms
V_{OV}	Overvoltage detection threshold	V_{OUT} rising, STRICT = 1b		103%	103.5%	104%	
	Hysteresis	V_{OUT} falling, STRICT = 1b			0.25%		
	Deglitch	V_{OUT} rising, STRICT = 1b			50		µs
I_{INRUSH}	Inrush current	V_{IN_DCDC1} = 3.6 V; C_{OUT} = 10 µF to 100 µF				500	mA
R_{DIS}	Discharge resistor			150	250	350	Ω
L	Nominal inductor value	See Table 8-2.		1	1.5	2.2	µH
	Tolerance			–30%		30%	
C_{OUT}	Output capacitance value	Ceramic, X5R or X7R, see Table 8-3.		10	22	100(1)	µF
DCDC2 (1.1-V BUCK)							
V_{IN_DCDC2}	Input voltage range	V_{IN_BIAS} > V_{UVLO}		2.7		5.5	V
V_{DCDC2}	Output voltage range	Adjustable through I^2C		0.85		1.675	V
	DC accuracy	2.7 V ≤ V_{IN} ≤ 5.5 V; 0 A ≤ I_{OUT} ≤ 1.8 A		–2%		2%	
	Dynamic accuracy	In respect to nominal output voltage I_{OUT} = 50 mA to 450 mA in < 1 µs C_{OUT} ≥ 10 µF, over full input voltage range		–2.5%		2.5%	
I_{OUT}	Continuous output current	V_{IN_DCDC2} > 2.7 V				1.8	A
I_Q	Quiescent current	Total current from I_{N_DCDC2} pin; device not switching, no load			25	50	µA
$R_{DS(ON)}$	High-side FET on resistance	V_{IN_DCDC2} = 3.6 V			230	355	mΩ
	Low-side FET on resistance	V_{IN_DCDC2} = 3.6 V			90	145	
I_{LIMIT}	High-side current limit	V_{IN_DCDC2} = 3.6 V			2.8		A
	Low-side current limit	V_{IN_DCDC2} = 3.6 V			3.1		
V_{PG}	Power-good threshold	V_{OUT} falling	STRICT = 0b	88.5%	90%	91.5%	
			STRICT = 1b	96%	96.5%	97%	
	Hysteresis	V_{OUT} rising	STRICT = 0b	3.8%	4.1%	4.4%	
			STRICT = 1b		0.25%		
	Deglitch	V_{OUT} falling	STRICT = 0b		1		ms
			STRICT = 1b		50		µs
		V_{OUT} rising	STRICT = 0b		10		µs
			STRICT = 1b		10		µs
	Time-out	Occurs at enable of DCDC2 and after DCDC2 register write (register 0x17).			5		ms

Copyright © 2026 Texas Instruments Incorporated

5.5 Electrical Characteristics (continued)

Over operating free-air temperature range (unless otherwise noted).

PARAMETER		TEST CONDITIONS		MIN	TYP	MAX	UNIT
V_{OV}	Overvoltage detection threshold	V_{OUT} rising, STRICT = 1b		103%	103.5%	104%	
	Hysteresis	V_{OUT} falling, STRICT = 1b			0.25%		
	Deglitch	V_{OUT} rising, STRICT = 1b			50		µs
I_{INRUSH}	Inrush current	V_{IN_DCDC2} = 3.6 V; C_{OUT} = 10 µF to 100 µF				500	mA
R_{DIS}	Discharge resistor			150	250	350	Ω
L	Nominal inductor value	See Table 8-2.		1	1.5	2.2	µH
	Tolerance			–30%		30%	
C_{OUT}	Output capacitance value	Ceramic, X5R or X7R, see Table 8-3.		10	22	100(1)	µF
DCDC3 (1.2-V BUCK)							
V_{IN_DCDC3}	Input voltage range	V_{IN_BIAS} > V_{UVLO}		2.7		5.5	V
V_{DCDC3}	Output voltage range	Adjustable through I^2C		0.9		3.4	V
	DC accuracy	2.7 V ≤ V_{IN} ≤ 5.5 V; 0 A ≤ I_{OUT} ≤ 1.8 A, V_{IN_DCDC3} ≥ (V_{DCDC3} + 700 mV)		–2%		2%	
	Dynamic accuracy	In respect to nominal output voltage I_{OUT} = 50 mA to 450 mA in < 1 µs C_{OUT} ≥ 10 µF, over full input voltage range		–2.5%		–2.5%	
I_{OUT}	Continuous output current	V_{IN_DCDC3} > 2.7 V				1.8	A
I_Q	Quiescent current	Total current from IN_DCDC3 pin; Device not switching, no load			25	50	µA
$R_{DS(ON)}$	High-side FET on resistance	V_{IN_DCDC3} = 3.6 V			230	345	mΩ
	Low-side FET on resistance	V_{IN_DCDC3} = 3.6 V			100	150	
I_{LIMIT}	High-side current limit	V_{IN_DCDC3} = 3.6 V			2.8		A
	Low-side current limit	V_{IN_DCDC3} = 3.6 V			3		
V_{PG}	Power-good threshold	V_{OUT} falling	STRICT = 0b	88.5%	90%	91.5%	
			STRICT = 1b	95%	95.5%	96%	
	Hysteresis	V_{OUT} rising	STRICT = 0b	3.8%	4.1%	4.4%	
			STRICT = 1b		0.25%		
	Deglitch	V_{OUT} falling	STRICT = 0b		1		ms
			STRICT = 1b		50		µs
		V_{OUT} rising	STRICT = 0b		10		µs
			STRICT = 1b		10		µs
	Time-out	Occurs at enable of DCDC3 and after DCDC3 register write (register 0x18).			5		ms
V_{OV}	Overvoltage detection threshold	V_{OUT} rising, STRICT = 1b		104%	104.5%	105%	
	Hysteresis	V_{OUT} falling, STRICT = 1b			0.25%		
	Deglitch	V_{OUT} rising, STRICT = 1b			50		µs
I_{INRUSH}	Inrush current	V_{IN_DCDC3} = 3.6 V; C_{OUT} = 10 µF to 100 µF				500	mA
R_{DIS}	Discharge resistor			150	250	350	Ω
L	Nominal inductor value	See Table 8-2.		1.0	1.5	2.2	µH
	Tolerance			–30%		30%	
C_{OUT}	Output capacitance value	Ceramic, X5R or X7R, see Table 8-3.		10	22	100	µF
DCDC4 (3.3-V BUCK-BOOST) / ANALOG AND I/O							
V_{IN_DCDC4}	Input voltage operating range	V_{IN_BIAS} > V_{UVLO}, –40°C to +105°C		2.7		5.5	V
V_{DCDC4}	Output voltage range	Adjustable through I^2C		1.175		3.3	V

Copyright © 2026 Texas Instruments Incorporated

5.5 Electrical Characteristics (continued)

Over operating free-air temperature range (unless otherwise noted).

PARAMETER		TEST CONDITIONS		MIN	TYP	MAX	UNIT
V_{DCDC4}	DC accuracy	4.2 V ≤ V_{IN} ≤ 5.5 V; 3 V < V_{OUT} ≤ 3.4 V 0 A ≤ I_{OUT} ≤ 1.6 A		–2%		2%	
		3.3 V ≤ V_{IN} ≤ 4.2 V; 3 V < V_{OUT} ≤ 3.4 V 0 A ≤ I_{OUT} ≤ 1.3 A		–2%		2%	
		2.7 V ≤ V_{IN} ≤ 5.5 V; 1.65 V < V_{OUT} ≤ 3 V 0 A ≤ I_{OUT} ≤ 1 A		–2%		2%	
		2.7 V ≤ V_{IN} ≤ 5.5 V; 1.175 V < V_{OUT} ≤ 1.65 V 0 A ≤ I_{OUT} ≤ 1 A		–2.5%		2.5%	
	Output voltage ripple	PFM mode enabled; 4.2 V ≤ V_{IN} ≤ 5.5 V; 0 A ≤ I_{OUT} ≤ V_{OUT} = 3.3 V					mV_{pp}
	Minimum duty cycle in step-down mode					18%	
I_{OUT}	Continuous output current	V_{IN_DCDC4} = 2.8 V, V_{OUT} = 3.3 V				1	A
		V_{IN_DCDC4} = 3.6 V, V_{OUT} = 3.3 V				1.3	
		V_{IN_DCDC4} = 5 V, V_{OUT} = 3.3 V				1.6	
I_Q	Quiescent current	Total current from IN_DCDC4 pin; Device not switching, no load.			25	50	µA
f_{SW}	Switching frequency				2400		kHz
$R_{DS(ON)}$	High-side FET on resistance	V_{IN_DCDC3} = 3.6 V	IN_DCDC4 to L4A		166		mΩ
			L4B to DCDC4		149		
	Low-side FET on resistance	V_{IN_DCDC3} = 3.6 V	L4A to GND		142	190	
			L4B to GND		144	190	
I_{LIMIT}	Average switch current limit	V_{IN_DCDC4} = 3.6 V			3000		mA
V_{PG}	Power-good threshold	V_{OUT} falling	STRICT = 0b	88.5%	90%	91.5%	
			STRICT = 1b	95%	95.5%	96%	
	Hysteresis	V_{OUT} rising	STRICT = 0b	3.8%	4.1%	4.4%	
			STRICT = 1b		0.25%		
	Deglitch	V_{OUT} falling	STRICT = 0b		1		ms
			STRICT = 1b		50		µs
		V_{OUT} rising	STRICT = 0b		10		µs
			STRICT = 1b		10		µs
	Time-out	Occurs at enable of DCDC4 and after DCDC4 register write (register 0x19)			5		ms
V_{OV}	Overvoltage detection threshold	V_{OUT} rising, STRICT = 1b		104%	104.5%	105%	
	Hysteresis	V_{OUT} falling, STRICT = 1b			0.25%		
	Deglitch	V_{OUT} rising, STRICT = 1b			50		µs
I_{INRUSH}	Inrush current	3.6 V ≤ $V_{INDCDC4}$ ≤ 5.5 V; 40 µF ≤ C_{OUT} ≤ 100 µF				500	mA
R_{DIS}	Discharge resistor[2]			150	250	350	Ω
L	Nominal inductor value	See Table 8-2.		1.2	1.5	2.2	µH
	Tolerance			–30%		30%	
C_{OUT}	Output capacitance value	Ceramic, X5R or X7R, see Table 8-3.		40	80	100	µF

Copyright © 2026 Texas Instruments Incorporated

5.5 Electrical Characteristics (continued)

Over operating free-air temperature range (unless otherwise noted).

PARAMETER		TEST CONDITIONS		MIN	TYP	MAX	UNIT
LDO1 (1.8-V LDO)							
V_{IN_LDO1}	Input voltage range	V_{IN_BIAS} > V_{UVLO}		1.8		5.5	V
I_Q	Quiescent current	No load			35		µA
V_{OUT}	Output voltage range	Adjustable through I^2C		0.9		3.4	V
	DC accuracy	V_{OUT} + 0.2 V ≤ V_{IN} ≤ 5.5 V; 0 A ≤ I_{OUT} ≤ 200 mA		–2%		2%	
I_{OUT}	Output current range	V_{IN_LDO1} – V_{DO} = V_{OUT}		0		200	mA
		V_{IN_LDO1} > 2.7 V, V_{OUT} = 1.8 V		0		400	
I_{LIMIT}	Short circuit current limit	Output shorted to GND		445	550		mA
V_{DO}	Dropout voltage	I_{OUT} = 100 mA, V_{IN} = 3.6 V				200	mV
V_{PG}	Power-good threshold	V_{OUT} falling	STRICT = 0b	86%	90%	94%	
			STRICT = 1b	95%	95.5%	96%	
		Hysteresis, V_{OUT} rising	STRICT = 0b	3%	4%	5%	
			STRICT = 1b		0.25%		
	Deglitch	V_{OUT} falling	STRICT = 0b		1		ms
			STRICT = 1b		50		µs
		V_{OUT} rising	STRICT = 0b		10		µs
			STRICT = 1b		10		µs
	Time-out				5		ms
V_{OV}	Overvoltage detection threshold	V_{OUT} rising, STRICT = 1b		104%	104.5%	105%	
	Hysteresis	V_{OUT} falling, STRICT = 1b			0.25%		
	Deglitch	V_{OUT} rising, STRICT = 1b			50		µs
		V_{OUT} falling, STRICT = 1b			1		ms
R_{DIS}	Discharge resistor			150	250	380	Ω
C_{OUT}	Output capacitance value	Ceramic, X5R or X7R			22	100	µF
LOAD SWITCH							
V_{IN_LS}	Input voltage range	V_{IN_BIAS} > V_{UVLO}		1.8		10	V
$R_{DS(ON)}$	Static on resistance	V_{IN_LS} = 9 V, I_{OUT}= 500 mA, over full temperature range				440	mΩ
		V_{IN_LS} = 5 V, I_{OUT}= 500 mA, over full temperature range				526	
		V_{IN_LS} = 2.8 V, I_{OUT}= 200 mA, over full temperature range				656	
		V_{IN_LS} = 1.8 V, I_{OUT}= 200 mA, over full temperature range				910	
I_{LIMIT}	Short circuit current limit	V_{IN_LS} > 2.3 V, Output shorted to GND	LSILIM[1:0] = 00b	98		126	mA
			LSILIM[1:0] = 01b	194		253	
			LSILIM[1:0] = 10b	475		738	
			LSILIM[1:0] = 11b	900		1234	
		V_{IN_LS} ≤ 2.3 V, Output shorted to GND	LSILIM[1:0] = 00b	98		126	
			LSILIM[1:0] = 01b	194		253	
			LSILIM[1:0] = 10b	475		738	
t_{BLANK}	Interrupt blanking time	Output shorted to GND until interrupt is triggered.			15		ms
R_{DIS}	Internal discharge resistor at output(2)	LSDCHRG = 1		650	1000	1500	Ω

Copyright © 2026 Texas Instruments Incorporated

5.5 Electrical Characteristics (continued)

Over operating free-air temperature range (unless otherwise noted).

PARAMETER		TEST CONDITIONS		MIN	TYP	MAX	UNIT
T_{OTS}	Overtemperature shutdown[3]			125	132	139	°C
	Hysteresis				10		°C
C_{OUT}	Nominal output capacitance value	Ceramic, X5R or X7R, see Table 8-3.		1	100	220	µF
I/O LEVELS AND TIMING CHARACTERISTICS							
PG_{DLY}	PGOOD delay time	PGDLY[1:0] = 00b			10		ms
		PGDLY[1:0] = 01b			20		
		PGDLY[1:0] = 10b			50		
		PGDLY[1:0] = 11b			150		
t_{DG}	Deglitch time	PB input	Rising edge		100		ms
			Falling edge		50		ms
		AC_DET input	Rising edge		100		µs
			Falling edge		10		ms
		PWR_EN input	Rising edge		10		ms
			Falling edge		100		µs
		GPIO1	Rising edge		1		ms
			Falling edge		1		ms
		GPIO2	Rising edge		5		µs
			Falling edge		5		µs
t_{RESET}	Reset time	PB input held low	TRST = 0b		8		s
			TRST = 1b		15		
V_{IH}	High level input voltage	SCL, SDA, GPIO1, and GPIO2		1.3			V
		AC_DET, PB		0.66 × IN_BIAS			
		PWR_EN		1.3			
V_{IL}	Low level input voltage	SCL, SDA, PWR_EN, AC_DET, PB, GPIO1, and GPIO2		0		0.4	V
V_{OL}	Low level output voltage	nWAKEUP, nINT, SDA, PGOOD, GPIO1, and GPIO2; I_{SINK} = 2 mA		0		0.3	V
		nPFO; I_{SINK} = 2 mA		0		0.35	
V_{PFI}	Power-fail comparator threshold	Input falling			800		mV
	Hysteresis	Input rising			40		mV
	Accuracy			–4%		4%	
	Deglitch	Input falling			25		µs
		Input rising			10		ms
I_{DC34_SEL}	DC34_SEL bias current	Enabled only at power-up.			10		µA
V_{DC34_SEL}	DCDC3 and DCDC4 power-up default selection thresholds	Threshold 1			100		mV
		Threshold 2			163		
		Threshold 3			275		
		Threshold 4			400		
		Threshold 5			575		
		Threshold 6			825		
		Threshold 7			1200		

Copyright © 2026 Texas Instruments Incorporated

5.5 Electrical Characteristics (continued)

Over operating free-air temperature range (unless otherwise noted).

PARAMETER		TEST CONDITIONS	MIN	TYP	MAX	UNIT
R_{DC34_SEL}	DCDC3 and DCDC4 power-up default selection resistor values	Setting 0	0	0	7.7	kΩ
		Setting 1		12.1		
		Setting 2		20		
		Setting 3	30.9	31.6	32.3	
		Setting 4		45.3		
		Setting 5				
		Setting 6		95.3		
		Setting 7		150		
I_{BIAS}	Input bias current	SCL, SDA, GPIO1(4), GPIO2 (4); V_{IN} = 3.3 V		0.01	1	µA
		PB, AC_DET, PFI; V_{IN} = 3.3 V			500	nA
I_{LEAK}	Pin leakage current	nINT, nWAKEUP, nPFO, PGOOD, PWR_EN, GPIO1(5), GPIO2(5) V_{OUT} = 3.3 V			500	nA
OSCILLATOR						
f_{OSC}	Oscillator frequency			2400		kHz
	Frequency accuracy	T_J = –40°C to +105°C	–12%		12%	
OVERTEMPERATURE SHUTDOWN						
T_{OTS}	Overtemperature shutdown	Increasing junction temperature	135	145	155	°C
	Hysteresis	Decreasing junction temperature		20		
T_{WARN}	High-temperature warning	Increasing junction temperature	90	100	110	°C
	Hysteresis	Decreasing junction temperature		15		

(1) 500-µF of remote capacitance can be supported for DCDC1 and DCDC2.
(2) Discharge function disabled by default.
(3) Switch is temporarily turned OFF if input voltage drops below UVLO threshold.
(4) Configured as input.
(5) Configured as output.

Copyright © 2026 Texas Instruments Incorporated

5.6 Timing Requirements

			MIN	NOM	MAX	UNIT
f_{SCL}	Serial clock frequency			100		kHz
				400		
$t_{HD;STA}$	Hold time (repeated) START condition. After this period, the first clock pulse is generated.	SCL = 100 kHz	4			µs
		SCL = 400 kHz	600			ns
t_{LOW}	LOW period of the SCL clock	SCL = 100 kHz	4.7			µs
		SCL = 400 kHz	1.3			
t_{HIGH}	HIGH period of the SCL clock	SCL = 100 kHz	4			µs
		SCL = 400 kHz(1)	1			
$t_{SU;STA}$	Set-up time for a repeated START condition	SCL = 100 kHz	4.7			µs
		SCL = 400 kHz	600			ns
$t_{HD;DAT}$	Data hold time	SCL = 100 kHz	0		3.45	µs
		SCL = 400 kHz	0		900	ns
$t_{SU;DAT}$	Data set-up time	SCL = 100 kHz	250			ns
		SCL = 400 kHz	100			
t_r	Rise time of both SDA and SCL signals	SCL = 100 kHz			1000	ns
		SCL = 400 kHz			300	
t_f	Fall time of both SDA and SCL signals	SCL = 100 kHz			300	ns
		SCL = 400 kHz			300	
$t_{SU;STO}$	Set-up time for STOP condition	SCL = 100 kHz	4			µs
		SCL = 400 kHz	600			ns
t_{BUF}	Bus free time between STOP and START condition	SCL = 100 kHz	4.7			µs
		SCL = 400 kHz	1.3			
t_{SP}	Pulse width of spikes which must be suppressed by the input filter	SCL = 100 kHz	—(2)		—(2)	ns
		SCL = 400 kHz	0		50	
C_b	Capacitive load for each bus line	SCL = 100 kHz			400	pF
		SCL = 400 kHz			400	

(1) The SCL duty cycle at 400 kHz must be > 40%.
(2) The inputs of I^2C devices in Standard-mode do not require spike suppression.

Copyright © 2026 Texas Instruments Incorporated

5.7 Typical Characteristics

At T_J = 25°C unless otherwise noted.

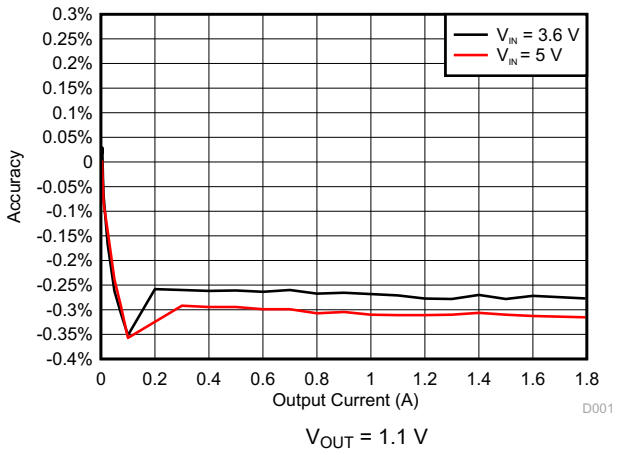

V_{OUT} = 1.1 V

Figure 5-1. DCDC1 Accuracy

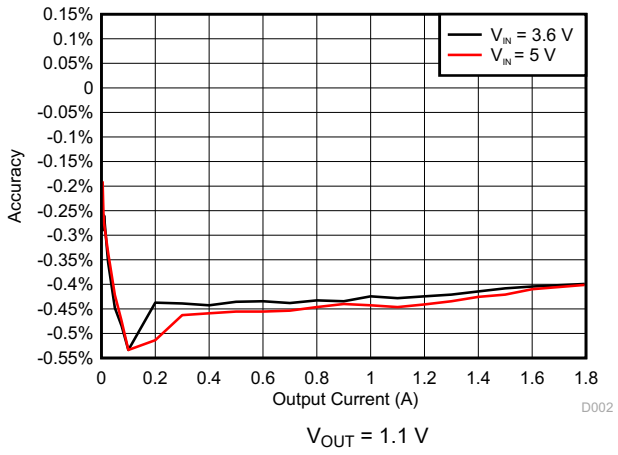

V_{OUT} = 1.1 V

Figure 5-2. DCDC2 Accuracy

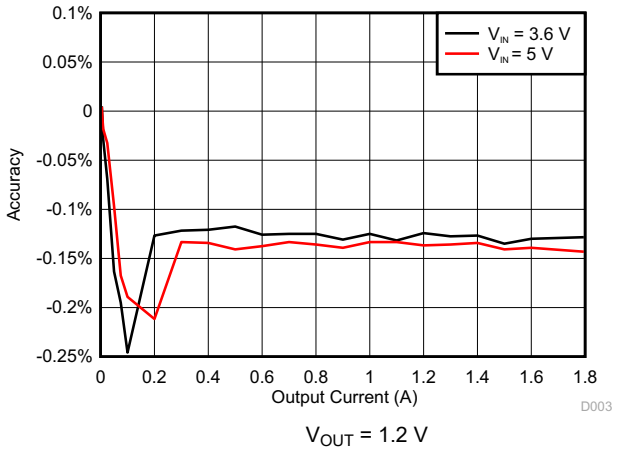

V_{OUT} = 1.2 V

Figure 5-3. DCDC3 Accuracy

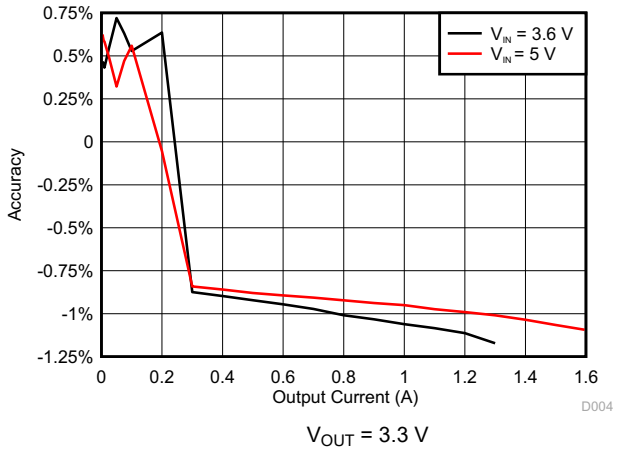

V_{OUT} = 3.3 V

Figure 5-4. DCDC4 Accuracy

Copyright © 2026 Texas Instruments Incorporated

6 Detailed Description

6.1 Overview

The TPS65216 provides three step-down converters three general-purpose I/Os, one buck-boost converter, one load switch, and one LDO. The system can be supplied by a regulated 5-V supply. The device is characterized across a –40°C to +105°C temperature range, which makes it suitable for various industrial applications.

The I^2C interface provides comprehensive features for using TPS65216. All rails, the load switch, and GPIOs can be enabled and disabled. Voltage thresholds for the UVLO and supervisor can be customized. Power-up and power-down sequences can also be programmed through I^2C. Interrupts for overtemperature, overcurrent, and undervoltage can be monitored for the load-switch.

The integrated voltage supervisor monitors DCDC 1-4 and LDO1. It has two settings; the standard settings only monitor for undervoltage, while the strict settings implement tight tolerances on both undervoltage and overvoltage. A power-good signal is provided to report the regulation state of the five rails.

The three hysteretic step-down converters can each supply up to 1.8 A of current. The default output voltages for each converter can be adjusted through the I^2C interface. DCDC1 and DCDC2 features dynamic voltage scaling with an adjustable slew rate. The step-down converters operate in a low power mode at light load, and can be forced into power mode (PWM) operation for noise sensitive applications.

Copyright © 2026 Texas Instruments Incorporated

6.2 Functional Block Diagram

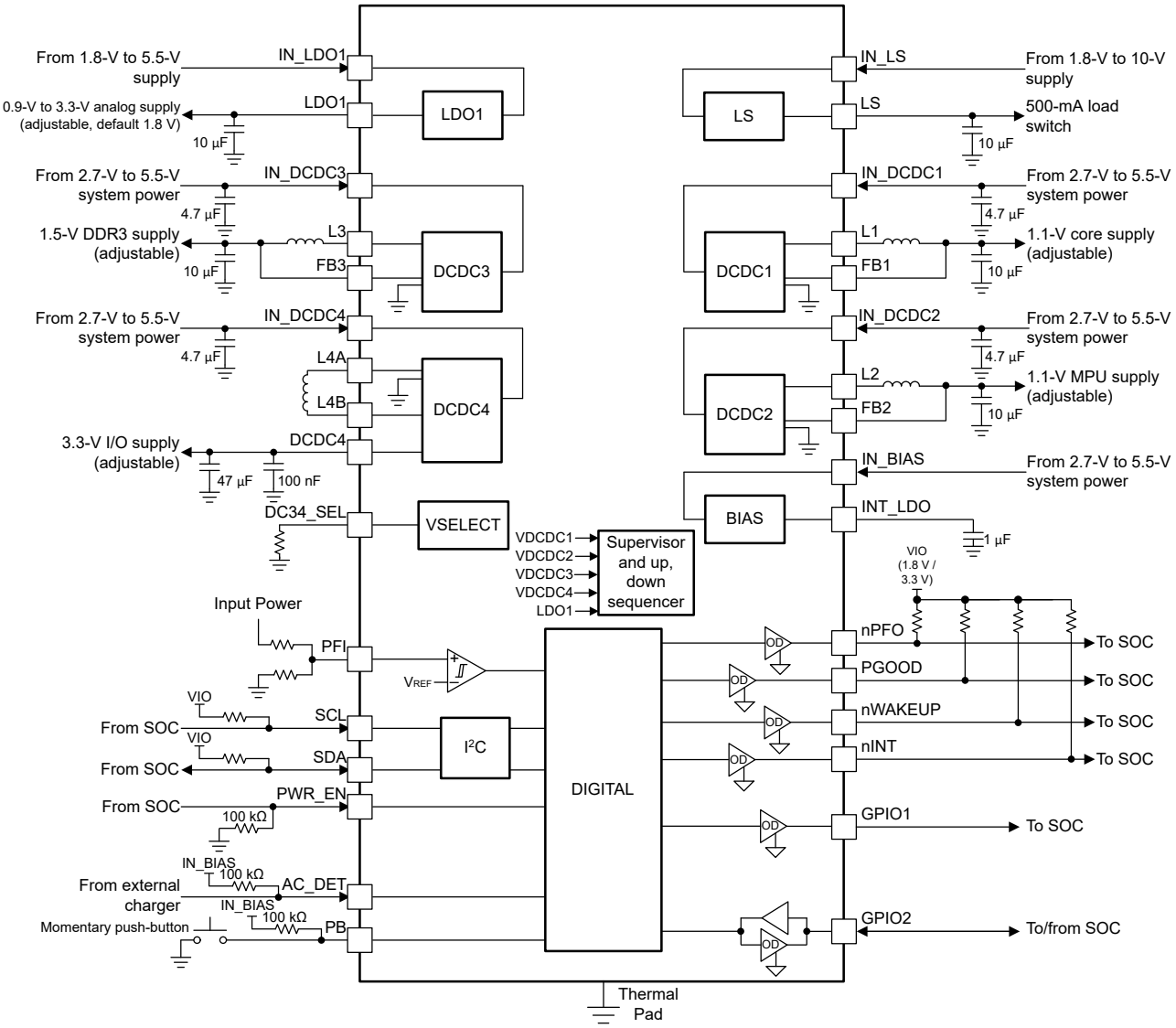

Copyright © 2026 Texas Instruments Incorporated

6.3 Feature Description

6.3.1 Wake-Up and Power-Up and Power-Down Sequencing

The TPS65216 has a predefined power-up and power-down sequence, which does not change in a typical application. The user can define custom sequences with I^2C. The power-up sequence is defined by a series of ten strobes and nine delay times. Each output rail is assigned to a strobe to determine the order of enabling rails. A single rail is assigned to only one strobe, but multiple rails can be assigned to the same strobe. The delay times between strobes are between 2 ms and 5 ms.

6.3.1.1 Power-Up Sequencing

When the power-up sequence initiates, STROBE 1 occurs, and any rail assigned to this strobe is enabled. After a delay time of DLY1, STROBE 2 occurs and the rail assigned to this strobe is powered up. The sequence continues until all strobes occur and all DLYx times execute. Strobe assignments and delay times are defined in the SEQx registers, and are changed under I^2C control. The power-up sequence executes if one of the following events occurs:

- From the OFF state:
  - The push-button (PB) is pressed (falling edge on PB) *or*
  - The AC_DET pin is pulled low (falling edge) *or*
  - The PWR_EN is asserted (driven to high-level) *or*
  - The main power is connected (IN_BIAS) and AC_DET is grounded *and*
  - The device is not in undervoltage lockout (UVLO) or overtemperature shutdown (OTS).
- From the PRE_OFF state:
  - The PB is pressed (falling edge on PB) *or*
  - The AC_DET pin is pulled low (falling edge) *or*
  - The PWR_EN is asserted (driven to high-level) *and*
  - The device is not in UVLO or OTS.
- From the SUSPEND state:
  - The PB is pressed (falling edge on PB) *or*
  - The AC_DET pin is pulled low (falling edge) *or*
  - The PWR_EN pin is pulled high (level sensitive) *and*
  - The device is not in UVLO or OTS.

When a power-up event is detected, the device enters a WAIT_PWR_EN state and triggers the power-up sequence. The device remains in WAIT_PWR_EN as long as the PWR_EN and either the PB or AC_DET pin are held low. If both, the PB and AC_DET return to logic-high state and the PWR_EN pin has not been asserted within 20 s of entering WAIT_PWR_EN state, the power-down sequence is triggered and the device returns to OFF state. Once PWR_EN is asserted, the device advances to ACTIVE state, which is functionally equivalent to WAIT_PWR_EN. However, the AC_DET pin is ignored and power-down is controlled by the PWR_EN pin only.

Rails not assigned to a strobe (SEQ = 0000b) are not affected by power-up and power-down sequencing and remain in their current ON or OFF state regardless of the sequencer. A rail can be enabled and disabled at any time by setting the corresponding enable bit in the ENABLEx register, with the exception that the ENABLEx register cannot be accessed while the sequencer is active. Enable bits always reflect the current enable state of the rail. For example, the sequencer sets and resets the enable bits for the rails under its control.

Note

The power-up sequence is defined by strobes and delay times, and can be triggered by the PB, AC_DET (not shown, same as PB), or PWR_EN pin.

Copyright © 2026 Texas Instruments Incorporated

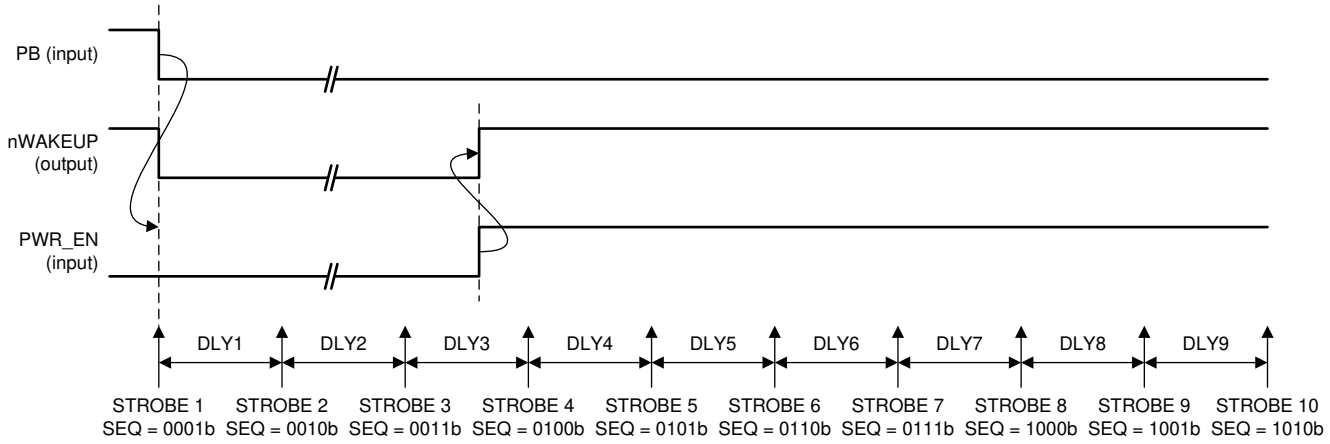

Push-button deglitch time is not shown.

Figure 6-1. Power-Up Sequences from OFF or SUSPEND State; PB is Power-Up Event

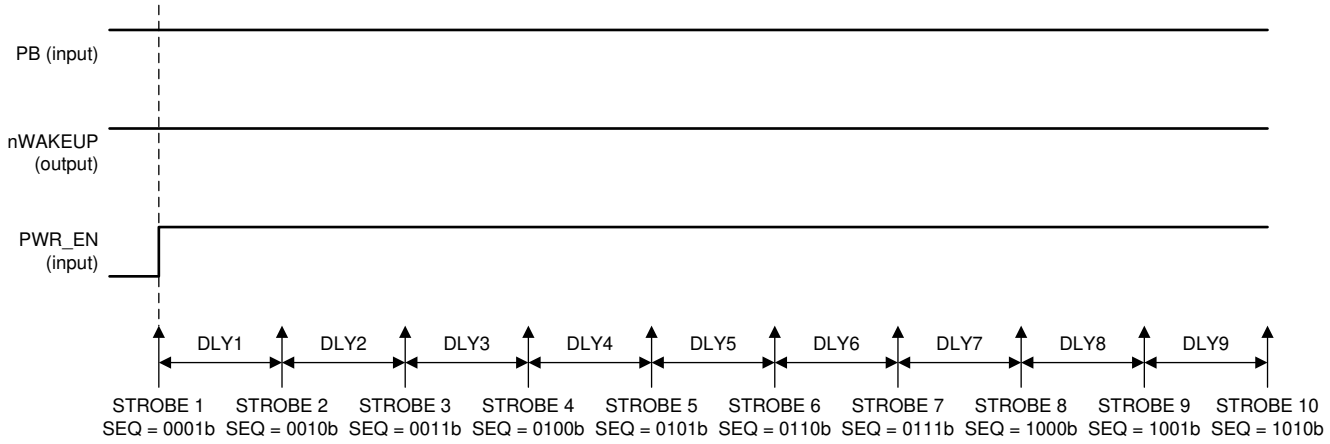

Figure 6-2. Power-Up Sequences from SUSPEND State; PWR_EN is Power-Up Event

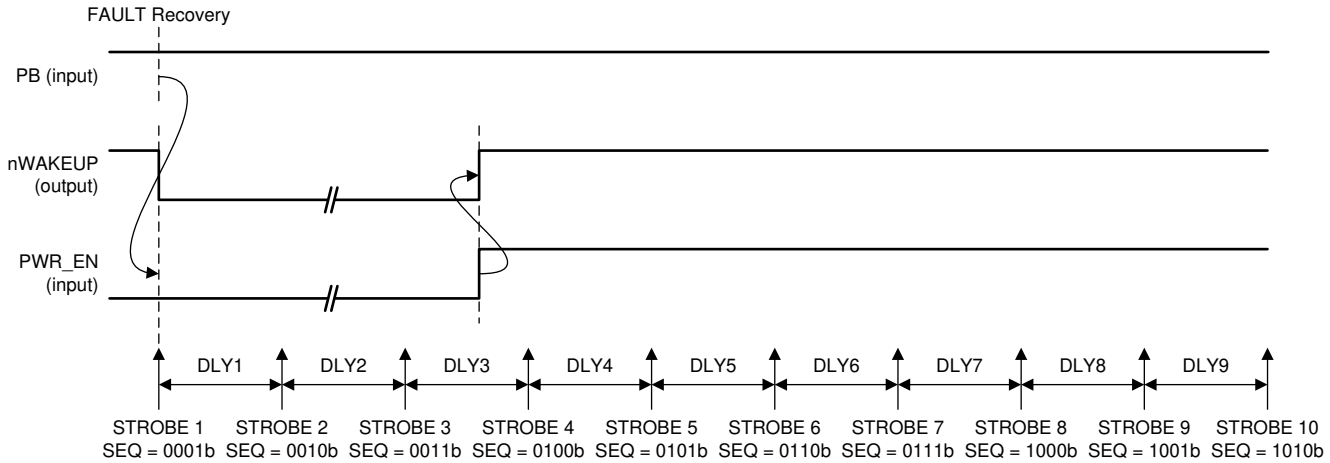

Figure 6-3. Power-Up Sequences from RECOVERY State

Copyright © 2026 Texas Instruments Incorporated

6.3.1.2 Power-Down Sequencing

By default, the power-down sequence follows the reverse of the power-up sequence. When the power-down sequence is triggered, STROBE 10 occurs and any rail assigned to STROBE 10 is shut down and its discharge circuit is enabled. After a delay time of DLY9, STROBE 9 occurs and any rail assigned to it is shut down and its discharge circuit is enabled. The sequence continues until all strobes occur and all DLYx times execute. The DLYx times are extended by a factor of 10x to provide ample time for discharge, and preventing output voltages from crossing during shut-down. The DLYFCTR bit is applied globally to all power-down delay times. Regardless of the DLYx and DLYFCTR settings, the PMIC enters OFF, SUSPEND, or RECOVERY state 500 ms after the power-down sequence initiates, to ensure that the discharge circuits remain enabled for a minimum of 150 ms before the next power-up sequence starts.

A power-down sequence executes if one of the following events occurs:

- The device is in the WAIT_PWR_EN state, the PB and AC_DET pins are high, PWR_EN is low, and the 20-s timer has expired.
- The device is in the ACTIVE state and the PWR_EN pin is pulled low.
- The device is in the WAIT_PWR_EN, ACTIVE, or SUSPEND state and the push-button is held low for > 8 s (15 s if TRST = 1b).
- A fault occurs in the device (OTS, UVLO, PGOOD failure).

When transitioning from ACTIVE to SUSPEND state, the rails not controlled by the power-down sequencer maintains the same ON/OFF state in SUSPEND state that it had in ACTIVE state. This allows for the selected power rails to remain powered up when in the SUSPEND state.

When transitioning to the OFF or RECOVERY state, rails not under sequencer control are shut-down as follows:

- DCDC1, DCDC2, DCDC3, DCDC4, , and LDO1 shut down at the beginning of the power-down sequence, if not under sequencer control (SEQ = 0b).
- LS shuts down as the state machine enters an OFF or RECOVERY state; 500 ms after the power-down sequence is triggered.

If the supply voltage on IN_BIAS drops below 2.5 V, the digital core is reset and all power rails are shut down instantaneously and are pulled low to ground by their internal discharge circuitry (DCDC1-4, and LDO1). The amount of time the discharge circuitry remains active is a function of the INT_LDO hold up time (see Internal LDO (INT_LDO) for more details).

6.3.1.3 Strobe 1 and Strobe 2

STROBE 1 and STROBE 2 are special strobes that are not used in the TPS65216 device, but STROBE 1 and STROBE 2 are still executed for power-up. The power-up sequence starts at STROBE 3 after DLY1 and DLY2 timers. The power-down sequence ends at STROBE 3.

Copyright © 2026 Texas Instruments Incorporated

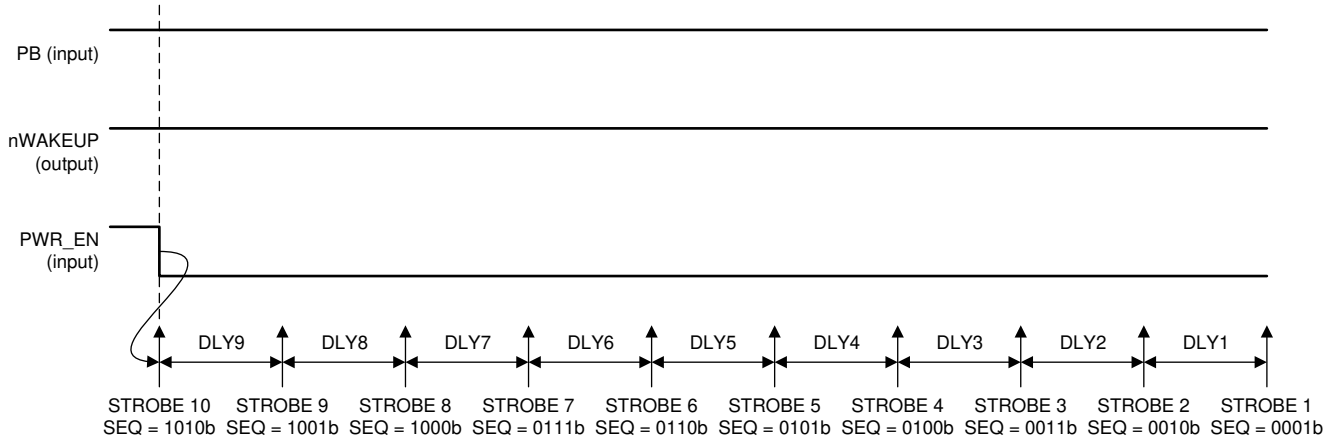

Figure 6-4. Power-Down Sequences to OFF State; PWR_EN is Power-Down Event

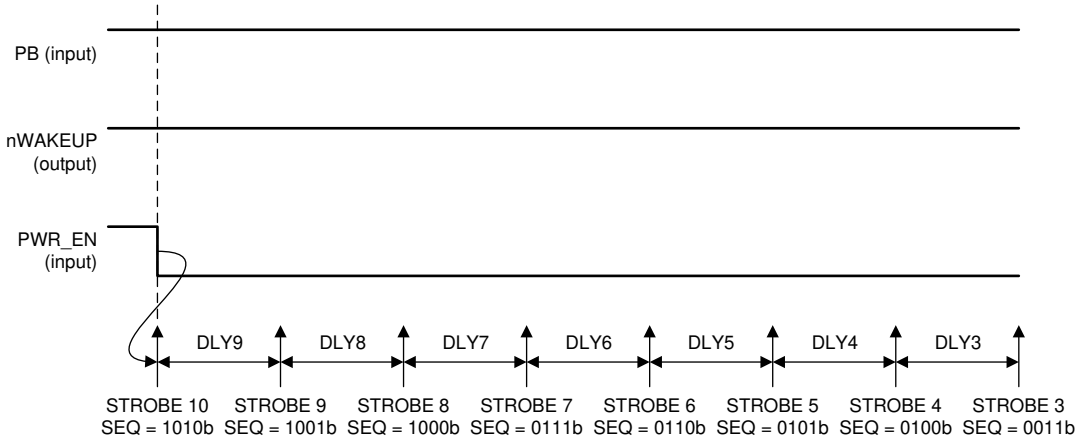

STROBE2 and STROBE1 are not shown.

Figure 6-5. Power-Down Sequences to SUSPEND State; PWR_EN is Power-Down Event

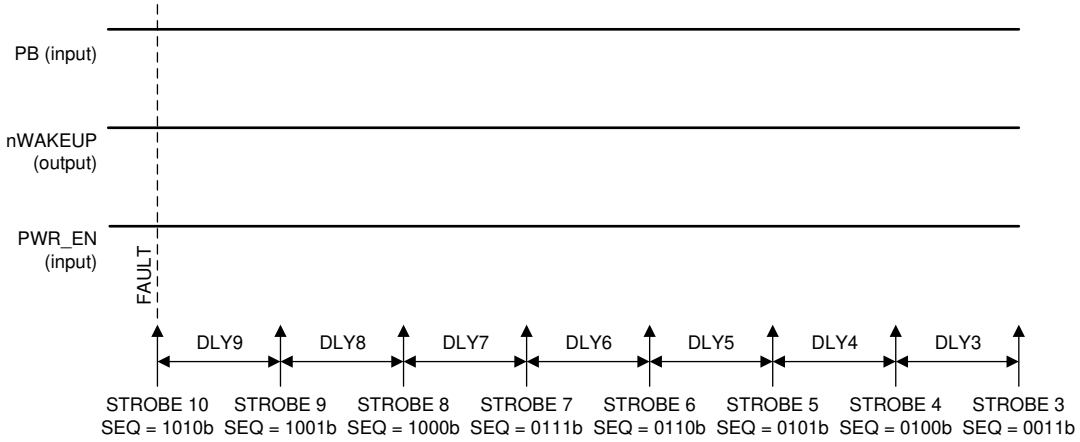

STROBE2 and STROBE1 are not shown.

Figure 6-6. Power-Down Sequences to RECOVERY State; TSD or UV is Power-Down Event

Copyright © 2026 Texas Instruments Incorporated

6.3.1.4 Supply Voltage Supervisor and Power-Good (PGOOD)

Power-good (PGOOD) is an open-drain output of the built-in voltage supervisor that monitors DCDC1, DCDC2, DCDC3, DCDC4, and LDO1. The output is Hi-Z when all enabled rails are in regulation and driven low when one or more rails encounter a fault which brings the output voltage outside the specified tolerance range. In a typical application PGOOD drives the reset signal of the SOC.

The supervisor has two modes of operation, controlled by the STRICT bit. With the STRICT bit set to 0, all enabled rails of the five regulators are monitored for undervoltage only with relaxed thresholds and deglitch times. With the STRCT bit set to 1, all enabled rails of the five regulators are monitored for undervoltage and overvoltage with tight limits and short deglitch times. Table 6-1 summarizes these details.

Table 6-1. Supervisor Characteristics Controlled by the STRICT Bit

PARAMETER		STRICT = 0b (TYP)	STRICT =1b (TYP)
Undervoltage monitoring	Threshold (output falling)	90%	96.5% (DCDC1 and DCDC2) 95.5% (DCDC3, DCDC4, and LDO1)
	Deglitch (output falling)	1 ms	50 µs
	Deglitch (output rising)	10 µs	10 µs
Overvoltage monitoring	Threshold (output falling)	N/A	103.5% (DCDC1 and DCDC2) 104.5% (DCDC3, DCDC4, and LDO1)
	Deglitch (output falling)	N/A	1 ms
	Deglitch (output rising)	N/A	50 µs

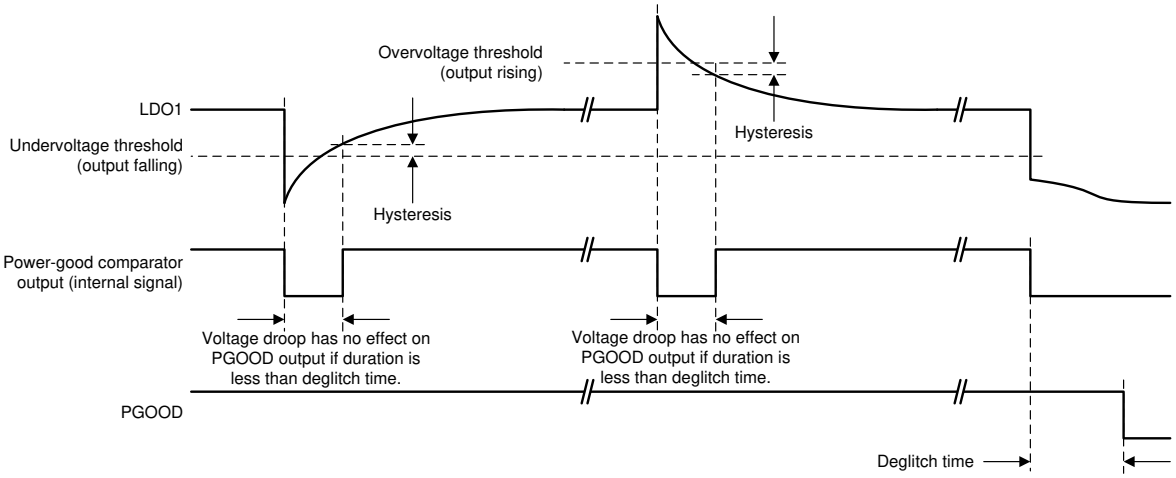

Figure 6-7. Definition of Undervoltage, Overvoltage Thresholds, Hysteresis, and Deglitch Times

The following rules apply to the PGOOD output:

- The power-up default state for THE PGOOD is low. When all rails are disabled, the PGOOD output is driven low.
- Only enabled rails are monitored. Disabled rails are ignored.
- Power-good monitoring of a particular rail starts 5 ms after the rail is enabled and is continuously monitored thereafter. This allows the rail to power-up.
- The PGOOD is delayed by PGDLY time after the sequencer is finished and the last rail is enabled.
- If an enabled rail is continuously outside the monitoring threshold for longer than the deglitch time, then the PGOOD is pulled low, and all rails are shut-down following the power-down sequence. PGDLY does not apply.
- Disabling a rail manually by resetting the DCx_EN or LDO1_EN bit has no effect on the PGOOD pin. If all rails are disabled, the PGOOD is driven low as the last rail is disabled.
- If the power-down sequencer is triggered, PGOOD is driven low.

Copyright © 2026 Texas Instruments Incorporated

- The PGOOD is driven low in the SUSPEND state, regardless of the number of rails that are enabled.

Figure 6-8 shows a typical power-up sequence and PGOOD timing.

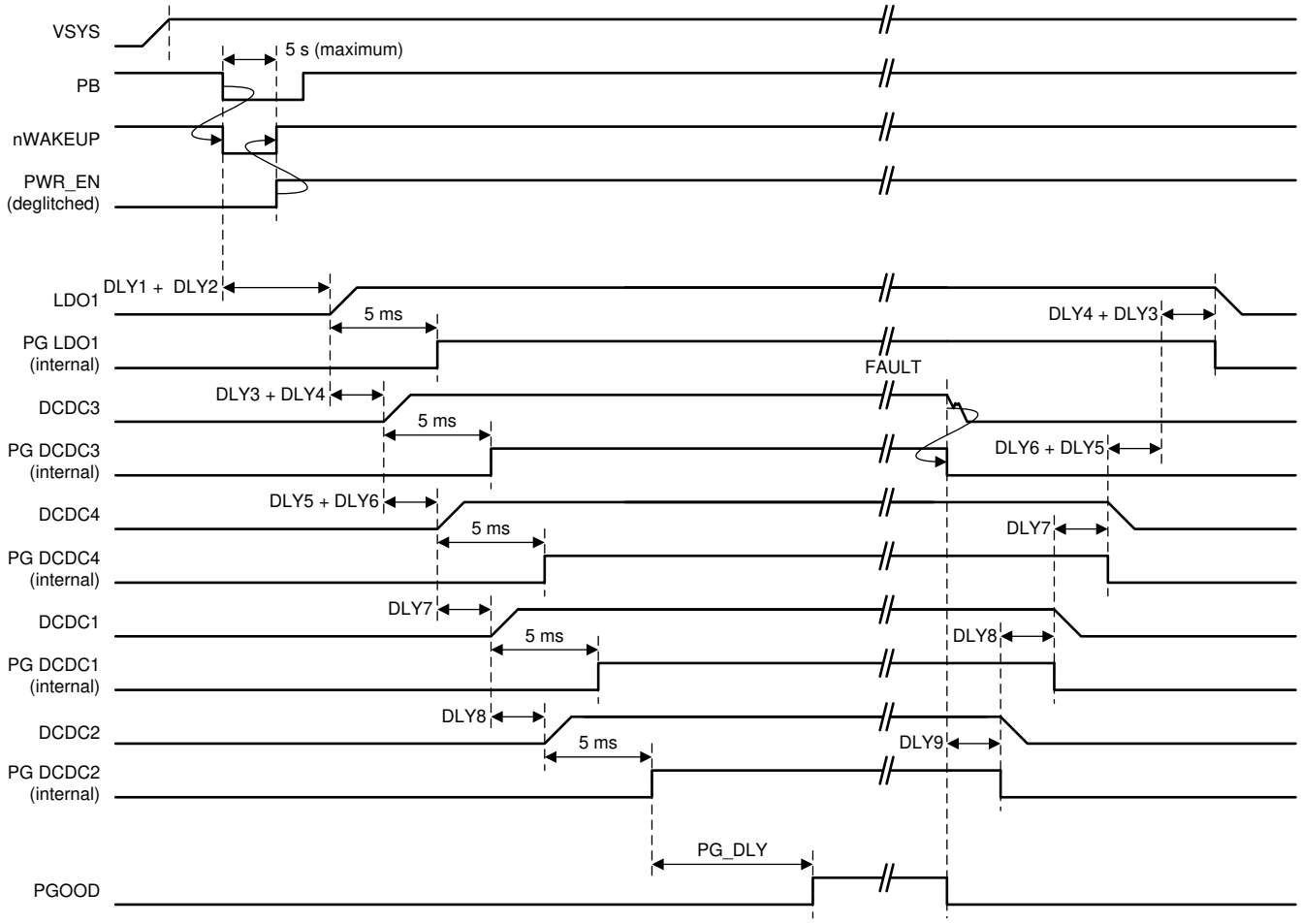

Figure 6-8. Typical Power-Up Sequence of the Main Output Rails

6.3.1.5 Internal LDO (INT_LDO)

The internal LDO provides a regulated voltage to the internal digital core and analog circuitry. The internal LDO has a nominal output voltage of 2.5 V and can support up to 10 mA of external load.

When system power fails, the UVLO comparator triggers the power-down sequence. If system power drops below , the digital core is reset and all remaining power rails are shut down instantaneously and are pulled low to ground by their internal discharge circuitry (DCDC1-4 and LDO1).

The internal LDO reverse blocks to prevent the discharging of the output capacitor (C_{INT_LDO}) on the INT_LDO pin. The remaining charge on the INT_LDO output capacitor provides a supply for the power rail discharge circuitry to ensure the outputs are discharged to ground even if the system supply has failed. The amount of hold-up time specified in Electrical Characteristics is a function of the output capacitor value (C_{INT_LDO}) and the amount of external load on the INT_LDO pin, if any. The design allows for enough hold-up time to sufficiently discharge DCDC1-4, and LDO1 to ensure proper processor power-down sequencing.

Copyright © 2026 Texas Instruments Incorporated

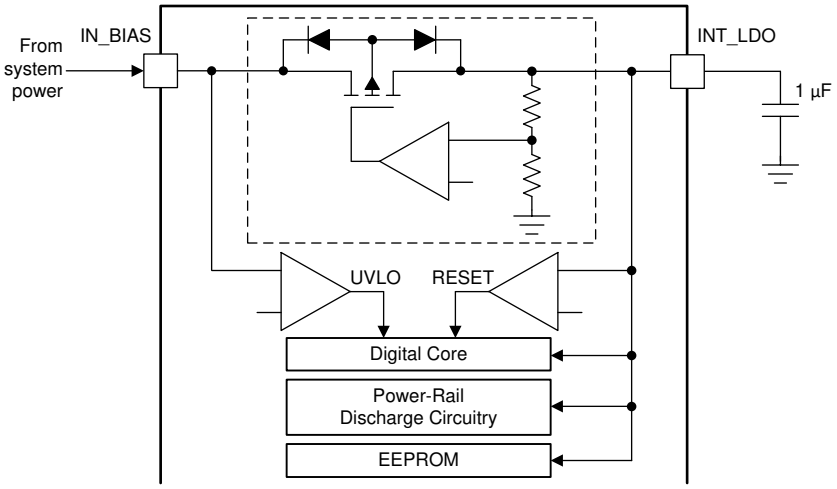

Figure 6-9. Internal LDO and UVLO Sensing

6.3.1.6 Current Limited Load Switch

The TPS65216 provides a current limited load switch with individual enable control. The load switch provides the following control and diagnostic features:

- The ON or OFF state of the switch is controlled by the corresponding LS_EN bit in the ENABLE register.
- The load switch can only be controlled through I^2C communication. The sequencer has no control over the load switch.
- The load switch has an active discharge function, disabled by default, and enabled through the LSDCHRG bit. When enabled, the switch output is discharged to ground whenever the switch is disabled.
- When the PFI input drops below the power-fail threshold (the power-fail comparator trips), the load switch is automatically disabled to shed system load. This function must be individually through the corresponding LSnPFO bit. The switch does not turn back on automatically as the system voltage recovers, and must be manually re-enabled.
- An interrupt (LS_I) issues whenever the load switch actively limits the output current, such as when the output load exceeds the current limit value. The switch remains ON and provides current to the load according to the current-limit setting.
- The load switch has a local overtemperature sensor which disables the switch if the power dissipation and junction temperature exceeds safe operating value. The switch automatically recovers once the temperature drops below the OTS threshold value minus hysteresis. The LS_F (fault) interrupt bit is set while the switch is held OFF by the OTS function.

The load switch (LS) is a non-reverse blocking, medium-voltage (< 10 V), low-impedance switch that can be used to provide 1.8-V to 10-V power to an auxiliary port. LS has four selectable current limit values that are selectable through LSILIM[1:0].

Copyright © 2026 Texas Instruments Incorporated

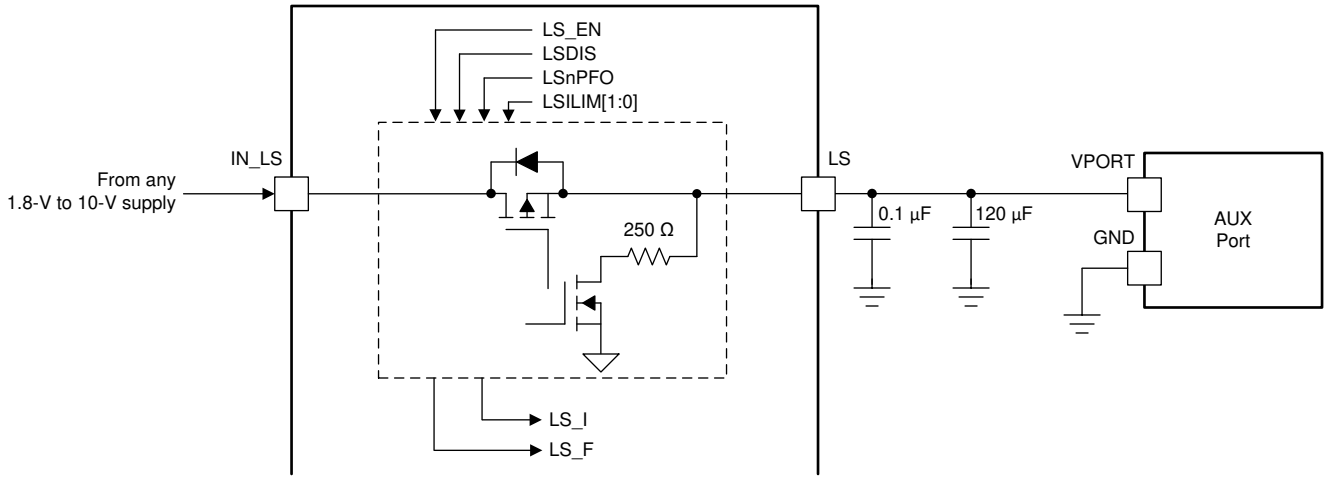

Figure 6-10. Typical Application of Load Switch

6.3.1.7 LDO1

LDO1 is a general-purpose LDO intended to provide power to analog circuitry on the SOC. LDO1 has an input voltage range from 1.8 V to 5.5 V, and can be connected either directly to the system power or the output of a DCDC converter. The output voltage is programmable in the range of 0.9 V to 3.4 V with a default of 1.8 V. LDO1 supports up to 200 mA at the minimum specified headroom voltage, and up to 400 mA at the typical operating condition of V_{OUT} = 1.8 V, V_{IN_LDO1} > 2.7 V.

6.3.1.8 UVLO

Depending on the slew rate of the input voltage into the IN_BIAS pin, the power rails of TPS65216 will be enabled at either V_{ULVO} or V_{ULVO} + V_{HYS}.

If the slew rate of the IN_BIAS voltage is greater than 30 V/s, then TPS65216 will power up at V_{ULVO}. Once the input voltage rises above this level, the input voltage may drop to the V_{UVLO} level before the PMIC shuts down. In this scenario, if the input voltage were to fall below V_{UVLO} but above 2.55 V, the input voltage would have to recover above V_{UVLO} in less than 5 ms for the device to remain active.

If the slew rate of the IN_BIAS voltage is less than 30 V/s, then TPS65216 will power up at V_{ULVO} + V_{HYS}. Once the input voltage rises above this level, the input voltage may drop to the V_{UVLO} level before the PMIC shuts down. In this scenario, if the input voltage were to fall below V_{UVLO} but above 2.5 V, the input voltage would have to recover above V_{UVLO} + V_{HYS} in less than 5 ms for the device to remain active.

In either slew rate scenario, if the input voltage were to fall below 2.5 V, the digital core is reset and all remaining power rails are shut down instantaneously and are pulled low to ground by their internal discharge circuitry (DCDC1-4 and LDO1).

Copyright © 2026 Texas Instruments Incorporated

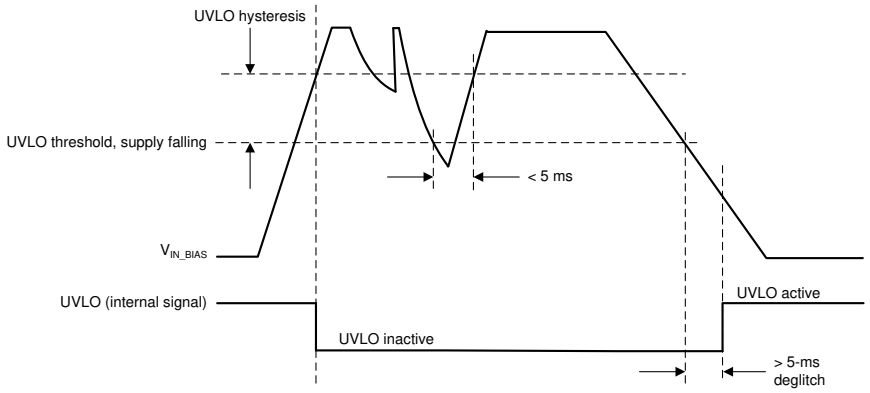

Figure 6-11. Definition of UVLO and Hysteresis

After the UVLO triggers, the internal LDO blocks current flow from its output capacitor back to the IN_BIAS pin, allowing the digital core and the discharge circuits to remain powered for a limited amount of time to properly shut-down and discharge the output rails. The hold-up time is determined by the value of the capacitor connected to INT_LDO. See Internal LDO (INT_LDO) for more details.

Copyright © 2026 Texas Instruments Incorporated

6.3.1.9 Power-Fail Comparator

The power-fail comparator notifies the system host if the system supply voltage drops and the system is at risk of shutting down. The comparator has an internal 800-mV threshold and the trip-point is adjusted by an external resistor divider.

By default, the power-fail comparator has no impact on any of the power rails or the load switch. The load switch can be configured to be disabled when the PFI comparator trips to shed system load and extend hold-up time. The power-fail comparator also triggers the power-down sequencer, such that all or selective rails power-down when the system voltage fails. To tie the power-fail comparator into the power-down sequence, the OFFnPFO bit in the CONTROL register must be set to 1.

The power-fail comparator cannot be monitored by software, such that no interrupt or status bit is associated to this function.

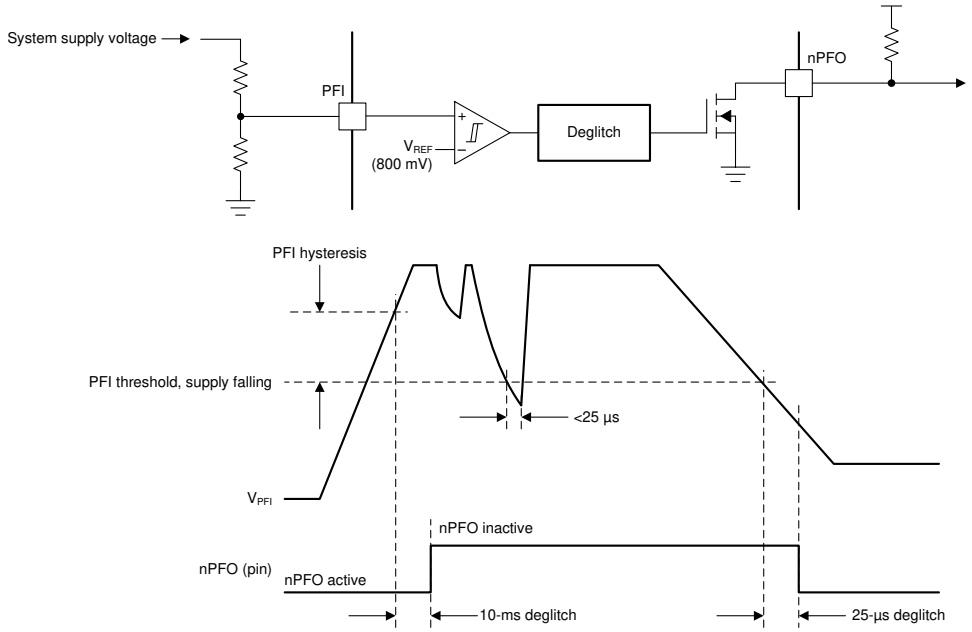

Figure 6-12. Power-Fail Comparator Simplified Circuit and Timing Diagram

Copyright © 2026 Texas Instruments Incorporated

6.3.1.10 DCDC3 and DCDC4 Power-Up Default Selection

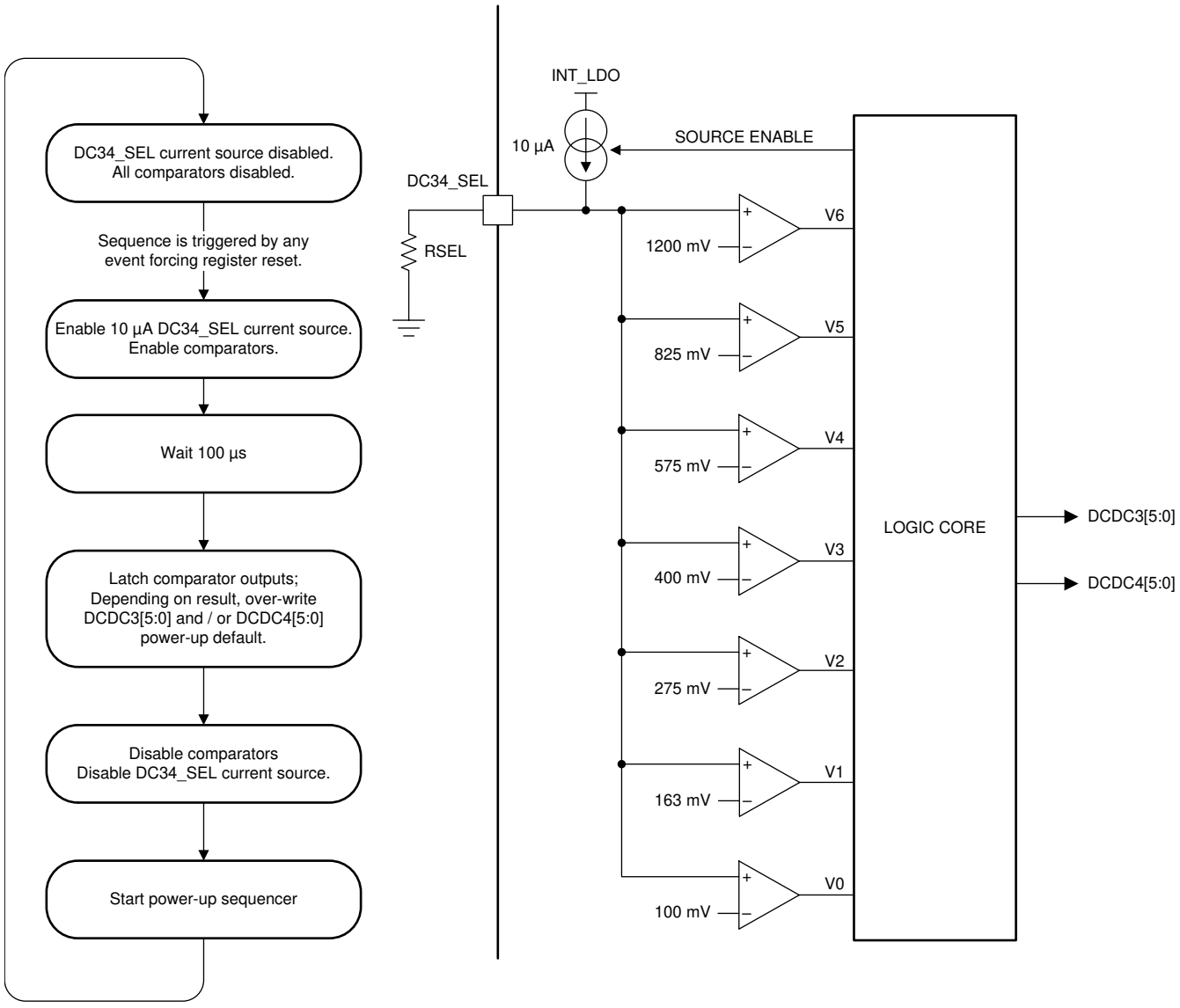

Figure 6-13. Left: Flow Chart for Selecting DCDC Power-Up Default Voltage Right: Comparator Circuit

Table 6-2. Power-Up Default Values of DCDC3 and DCDC4

RSEL [KΩ]			POWER-UP DEFAULT	
MIN	TYP	MAX	DCDC3[5:0]	DCDC4[5:0]
0	0	7.7	Programmed default (1.2 V)	Programmed default (3.3 V)
	12.1		0x12 (1.35 V)	Programmed default (3.3 V)
	20		0x18 (1.5 V)	Programmed default (3.3 V)
30.9	31.6	32.3	0x1F (1.8 V)	Programmed default (3.3 V)
	45.3		0x3D (3.3 V)	0x01 (1.2 V)
			Programmed default (1.2 V))	0x07 (1.35 V)
	95.3		Programmed default (1.2 V)	0x0D (1.5 V)
	150	Tied to INT_LDO	Programmed default (1.2 V)	0x14 (1.8 V)

Copyright © 2026 Texas Instruments Incorporated

6.3.1.11 I/O Configuration

The device has two GPIOpins, which are configured as follows:

- GPIO1:
  - General-purpose, open-drain output is controlled by the GPO1 user bit or sequencer.
- GPIO2:
  - General-purpose, open-drain output id controlled by the GPO2 user bit or sequencer.
  - Reset input-signal for DCDC1 and DCDC2.

Table 6-3. GPIO1 Configuration

GPO1 (USER BIT)	GPIO1 (I/O PIN)	COMMENTS
0	0	Open-drain output, driving low
1	HiZ	Open-drain output, HiZ

Table 6-4. GPIO2 Configuration

DC12_RST (EEPROM)	GPO2 (USER BIT)	GPIO2 (I/O PIN)	COMMENTS
0	0	0	Open-drain output, driving low
0	1	HiZ	Open-drain output, HiZ
1	X	Active low	GPIO2 is DCDC1 and DCDC2 reset input signal to PMIC (active low). See *Using GPIO2 as Reset Signal to DCDC1 and DCDC2* for details.

6.3.1.11.1 Using GPIO2 as Reset Signal to DCDC1 and DCDC2

The GPIO2 is an edge-sensitive reset input to the PMIC, when the DC12_RST bit set to 1. The reset signal affects DCDC1 and DCDC2 only, so that only those two registers are reset to the power-up default whenever GPIO2 input transitions from high to low, while all other registers maintain their current values. DCDC1 and DCDC2 transition back to the default value following the SLEW settings, and are not power cycled. This function recovers the processor from reset events while in low-power mode.

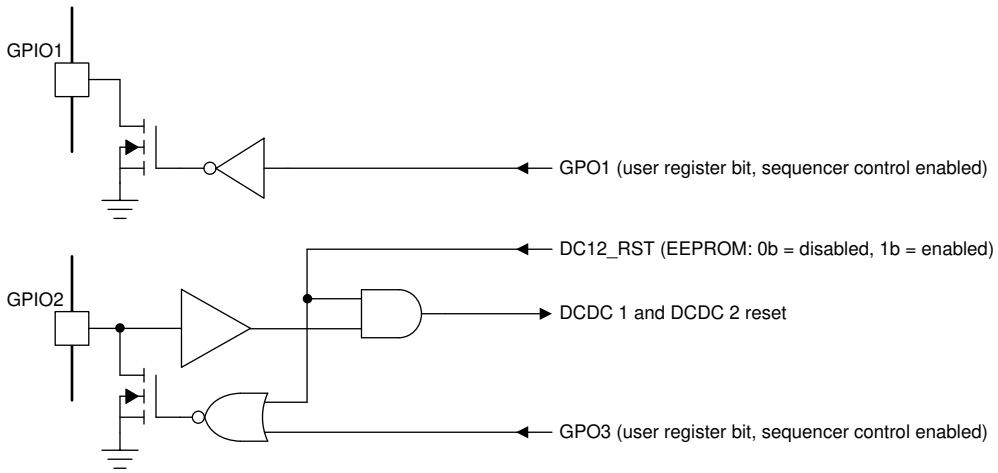

Figure 6-14. I/O Pin Logic

Copyright © 2026 Texas Instruments Incorporated

6.3.1.12 Push Button Input (PB)

The PB pin is a CMOS-type input used to power-up the PMIC. Typically, the PB pin is connected to a momentary switch to ground and an external pullup resistor. The power-up sequence is triggered if the PB input is held low for 600 ms.

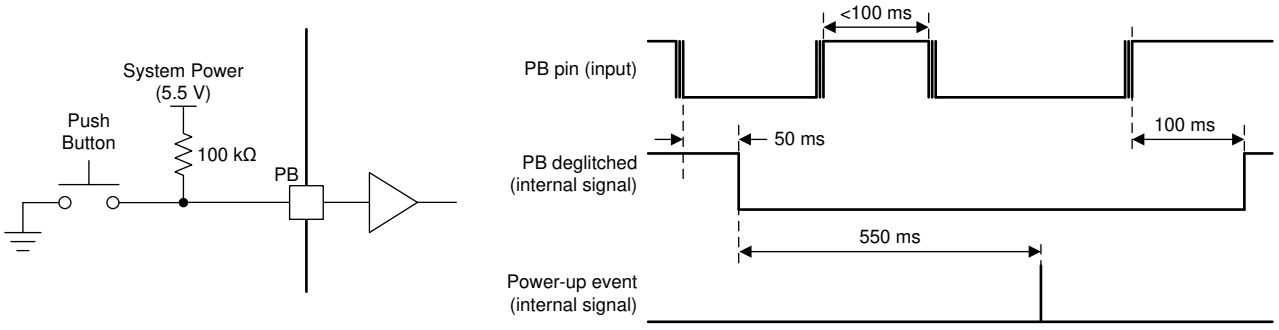

Figure 6-15. Left: Typical PB Input Circuit Right: Push-Button Input (PB) Deglitch and Power-Up Timing

In ACTIVE mode, the TPS65216 monitors the PB input and issues an interrupt when the pin status changes, such as when it drops below or rises above the PB input-low or input-high thresholds. The interrupt is masked by the PBM bit in the INT_MASK1 register.

Copyright © 2026 Texas Instruments Incorporated

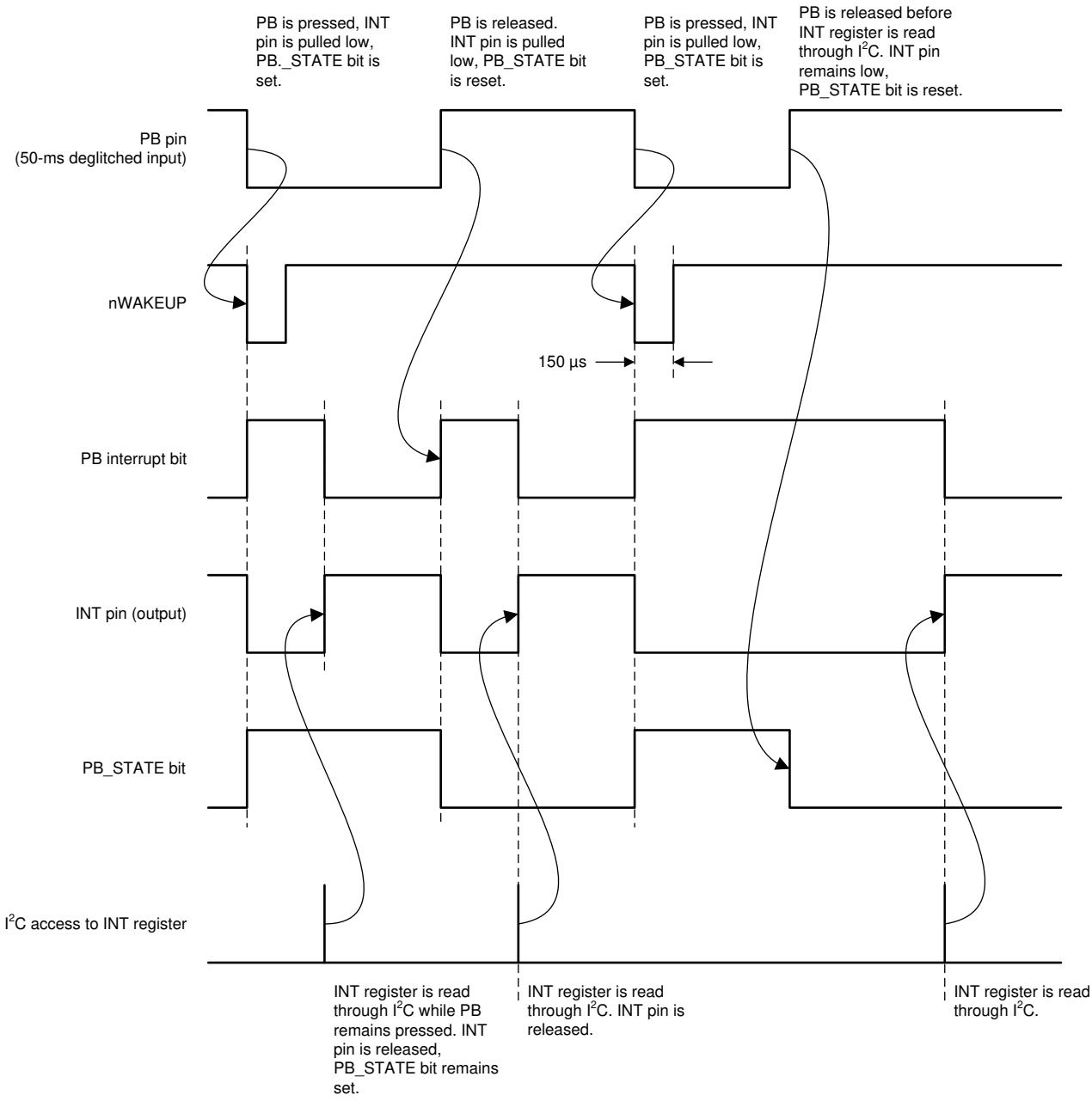

Figure 6-16. PB Input-Low or Input-High Thresholds

Note

Interrupts are issued whenever the PB pin status changes. The PB_STATE bit reflects the current status of the PB input. nWAKEUP is pulled low for 150 µs on every falling edge of PB.

Copyright © 2026 Texas Instruments Incorporated

6.3.1.12.1 Signaling PB-Low Event on the nWAKEUP Pin

In ACTIVE state, the nWAKEUP pin is pulled low for five 32-kHz clock cycles (approximately 150 µs) whenever a falling edge on the PB input is detected. This allows the host processor to wakeup from DEEP SLEEP mode of operation. It is recommended to pull-up the nWAKEUP pin to a I/O power supply through a pull-up resistor. For nWAKEUP to function properly in the SUSPEND state, this pin must be pulled up to a power supply that is disconnected from the sequencer before entering SUSPEND. .

6.3.1.12.2 Push Button Reset

If the PB input is pulled low for 8 s (15 s if TRST = 1b) or longer, then all rails are disabled, and the device enters the RECOVERY state. The device powers up automatically after the 500 ms power-down sequence is complete, regardless of the state of the PB input. Holding the PB pin low for 8 s (15 s if TRST = 1b), only turns off the device temporarily and forces a system restart, and is not a power-down function. If the PB is held low continuously, the device power-cycles in 8-s and 15-s intervals.

6.3.1.13 AC_DET Input (AC_DET)

The AC_DET pin is a CMOS-type input used in three different ways to control the power-up of the PMIC:

- In a battery operated system, AC_DET is typically connected to an external battery charger with an open-drain power-good output pulled low when a valid charger supply is connected to the system. A falling edge on the AC_DET pin causes the PMIC to power up.
- In a non-portable system, the AC_DET pin may be shorted to ground and the device powers up whenever system power is applied to the chip.
- If none of the above behaviors are desired, AC_DET may be tied to system power (IN_BIAS). Power-up is then controlled through the push-button input or PWR_EN input.

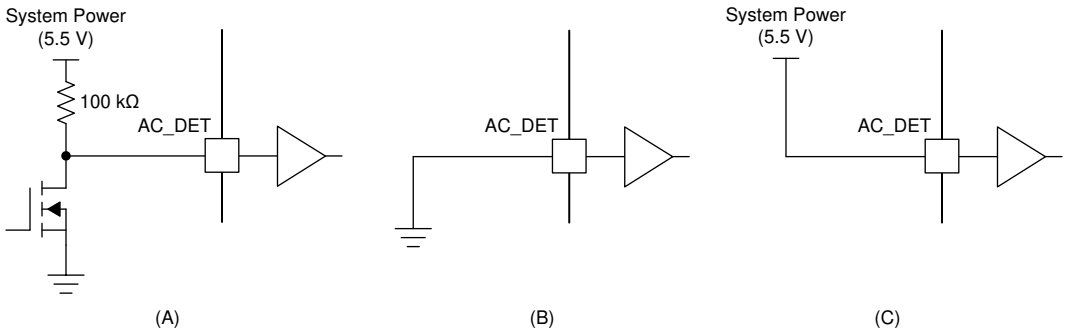

A. Portable Systems
B. Non-portable Systems
C. Disabled

Figure 6-17. AC_DET Pin Configurations

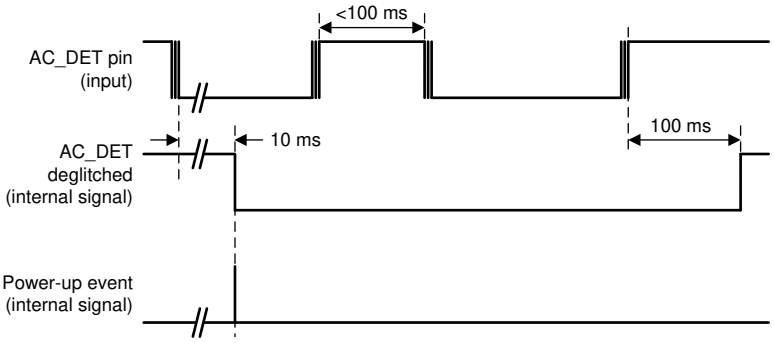

Figure 6-18. AC_DET Input Deglitch and Power-Up Timing (Portable Systems)

In ACTIVE state, the TPS65216 monitors the AC_DET input and issues an interrupt when the pin status changes, such as when it drops below or rises above the AC_DET input-low or input-high thresholds. The interrupt is masked by the ACM bit in the INT_MASK1 register.

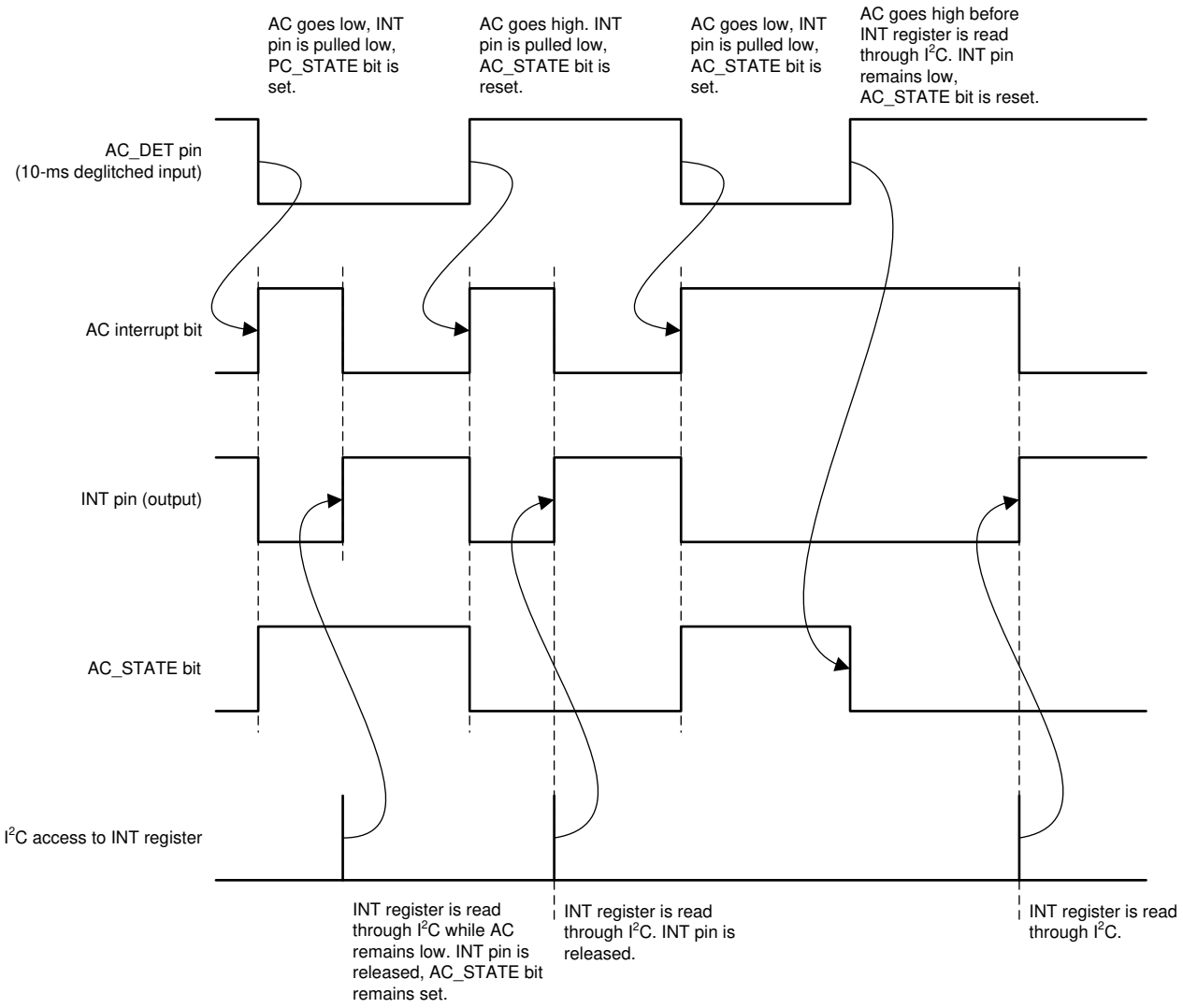

Figure 6-19. AC_STATE Pin

Note

Interrupts are issued whenever the AC_DET pin status changes. The AC_STATE bit reflects the current status of the AC_DET input.

6.3.1.14 Interrupt Pin (INT)

The interrupt pin signals any event or fault condition to the host processor. Whenever a fault or event occurs in the device, the corresponding interrupt bit is set in the INT register, and the open-drain output is pulled low. The INT pin is released (returns to Hi-Z state) and fault bits are cleared when the host reads the INT register. If a failure persists, the corresponding INT bit remains set and the INT pin is pulled low again after a maximum of 32 µs.

The MASK register masks events from generating interrupts. The MASK settings affect the INT pin only, and have no impact on the protection and monitor circuits.

Copyright © 2026 Texas Instruments Incorporated

6.3.1.15 I²C Bus Operation

The TPS65216 hosts a slave I²C interface (address 0x24) that supports data rates up to 400 kbps, auto-increment addressing. [1]

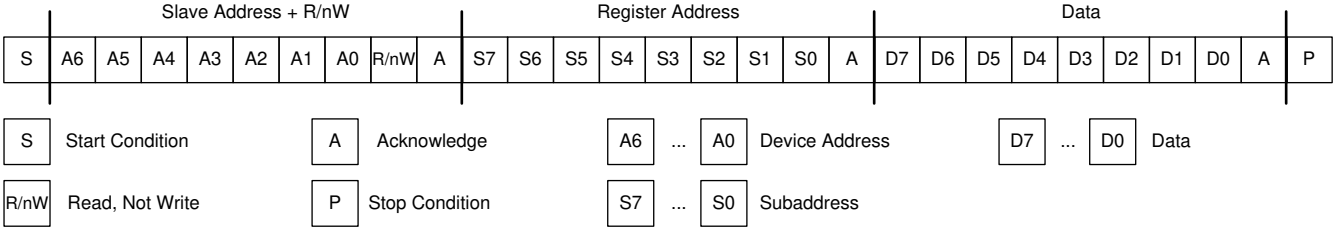

Figure 6-20. Subaddress in I²C Transmission

The I²C bus is a communications link between a controller and a series of slave terminals. The link is established using a two-wired bus consisting of a serial clock signal (SCL) and a serial data signal (SDA). The serial clock is sourced from the controller in all cases where the serial data line is bi-directional for data communication between the controller and the slave terminals. Each device has an open drain output to transmit data on the serial data line. An external pullup resistor must be placed on the serial data line to pull the drain output high during data transmission.

Data transmission initiates with a start bit from the controller as shown in Figure 6-22. The start condition is recognized when the SDA line transitions from high to low during the high portion of the SCL signal. Upon reception of a start bit, the device receives serial data on the SDA input and checks for valid address and control information. If the appropriate slave address is set for the device, the device issues an acknowledge pulse and prepares to receive register address and data. Data transmission is completed by either the reception of a stop condition or the reception of the data word sent to the device. A stop condition is recognized as a low to high transition of the SDA input during the high portion of the SCL signal. All other transitions of the SDA line must occur during the low portion of the SCL signal. An acknowledge issues after the reception of valid slave address, register-address, and data words. The I²C interfaces an auto-sequence through the register addresses, so that multiple data words can be sent for a given I²C transmission. Reference Figure 6-21 and Figure 6-22 for details.

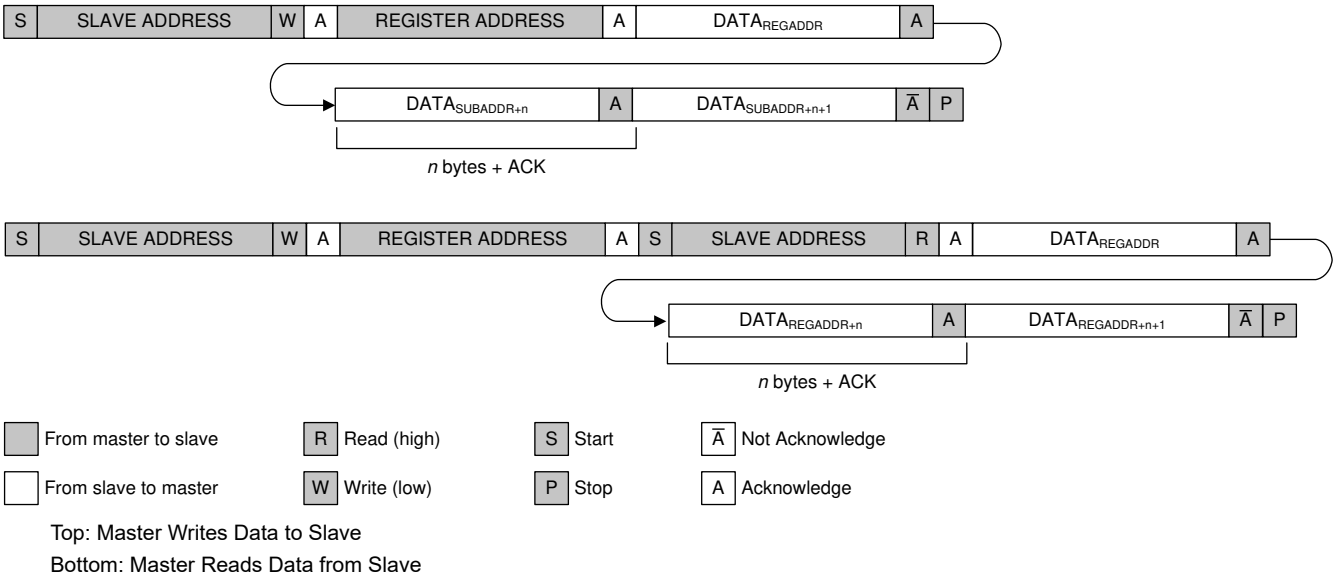

Figure 6-21. I²C Data Protocol

[1] Note: The SCL duty cycle at 400 kHz must be >40%.

Copyright © 2026 Texas Instruments Incorporated

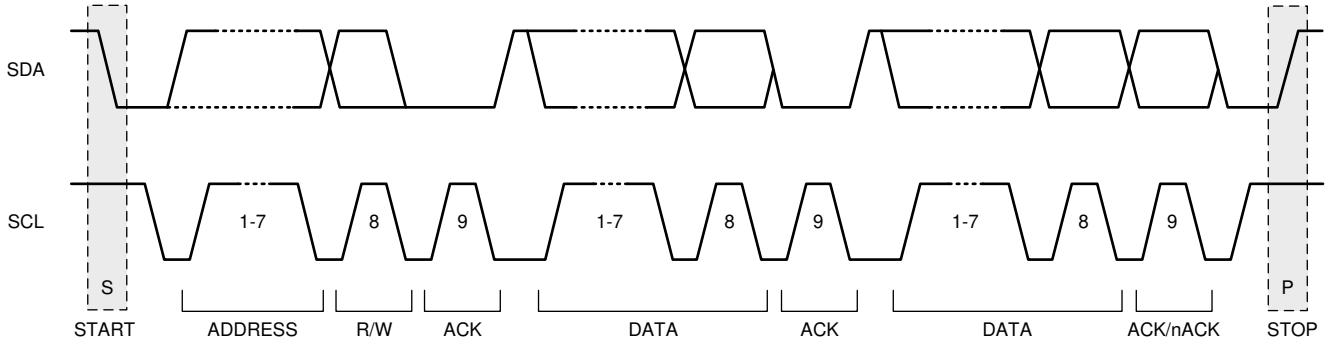

Figure 6-22. I²C Protocol and Transmission Timing I²C Start Stop and Acknowledge Protocol

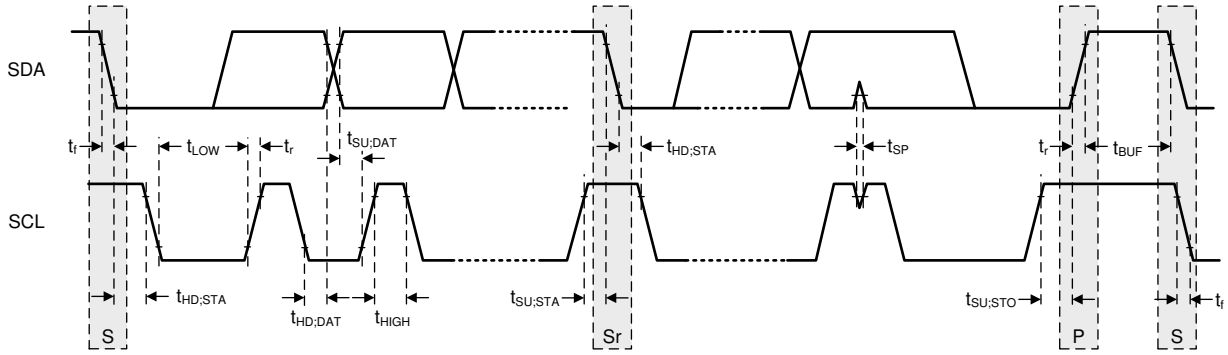

Figure 6-23. I²C Protocol and Transmission Timing I²C Data Transmission Timing

Copyright © 2026 Texas Instruments Incorporated

6.4 Device Functional Modes

6.4.1 Modes of Operation

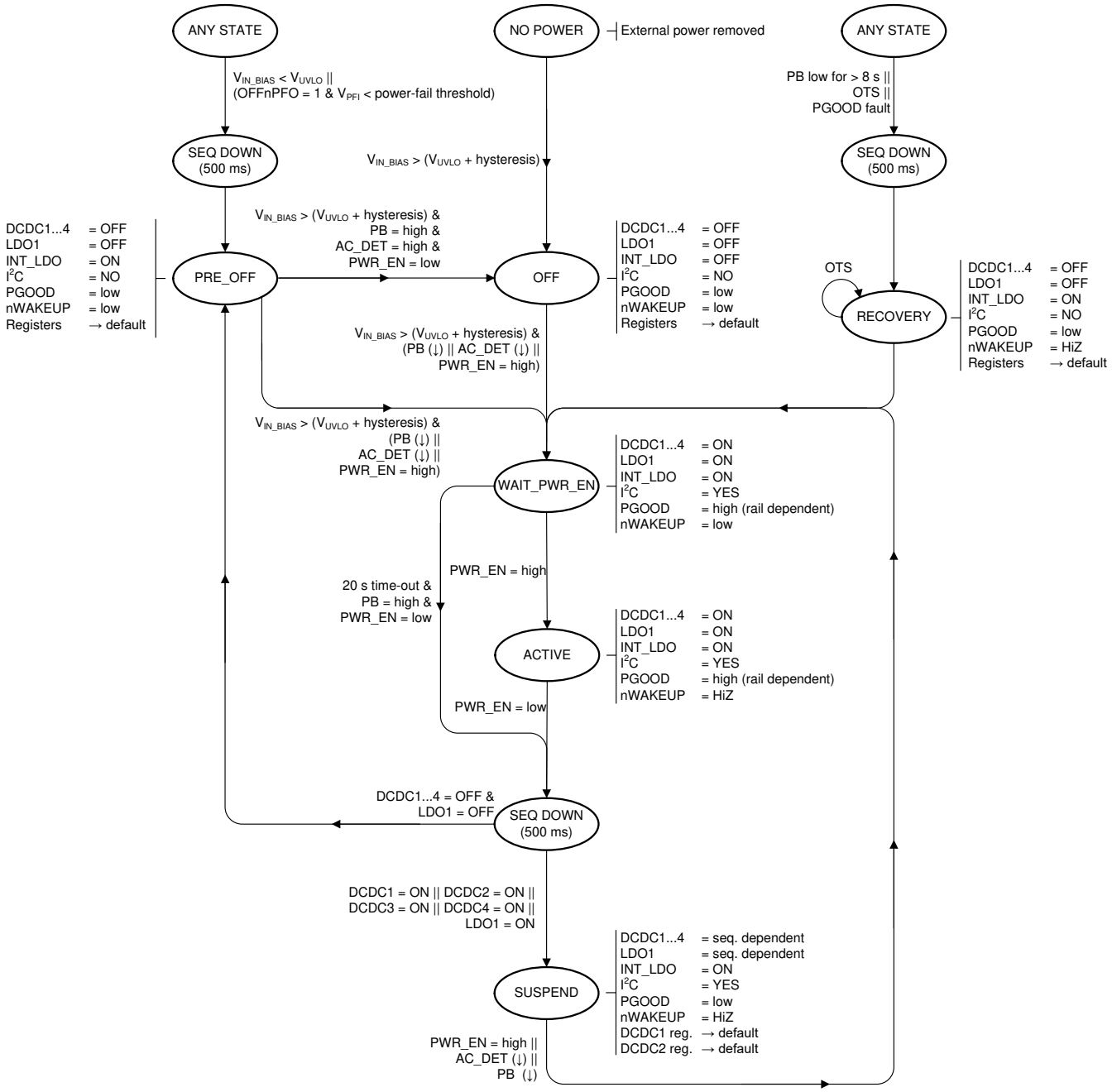

Figure 6-24. Modes of Operation Diagram

6.4.2 OFF

In OFF mode, the PMIC is completely shut down with the exception of a few circuits to monitor the AC_DET, PWR_EN, and PB input. All power rails are turned off and the registers are reset to their default values. The I^2C communication interface is turned off. This is the lowest-power mode of operation. To exit OFF mode V_{IN_BIAS} must exceed the UVLO threshold and one of the following wake-up events must occur:

- The PB input is pulled low.
- THE AC_DET input is pulled low.
- The PWR_EN input is pulled high.

To enter the OFF state, ensure that all power rails are assigned to the sequencer, then pull the PWR_EN pin low. Additionally, if the OFFnPFO bit is set to 1b and the PFI input falls below the power fail threshold the device transitions to the OFF state. If a PGOOD or OTS fault occurs while in the ACTIVE state, TPS65216 will transition to the RESET state.

6.4.3 ACTIVE

This is the typical mode of operation when the system is up and running. All DCDC converters, LDOs, and load switch are operational and can be controlled through the I^2C interface. After a wake-up event, the PMIC enables all rails controlled by the sequencer and pulls the nWAKEUP pin low to signal the event to the host processor. The device only enters the ACTIVE state if the host asserts the PWR_EN pin within 20 s after the wake-up event. Otherwise it will enter the OFF state. The nWAKEUP pin returns to HiZ mode after the PWR_EN pin is asserted. The ACTIVE state can also be directly entered from the SUSPEND state by pulling the PWR_EN pin high. See the SUSPEND state description for details. To exit the ACTIVE mode, the PWR_EN pin must be pulled low.

6.4.4 SUSPEND

The SUSPEND state is a low-power mode of operation intended to support system standby. Typically all power rails are turned off with the exception of any rail with an SEQ register set to 0h. To enter the SUSPEND state, pull the PWR_EN pin low. All power rails controlled by the power-down sequencer are shut down, and after 500 ms the device enters the SUSPEND state. All rails not controlled by the power-down sequencer will maintain its state. Note: all register values are reset as the device enters the SUSPEND state. The device enters the ACTIVE state after it detects a wake-up event as described in the previous sections.

6.4.5 RESET

The TPS65216 can be reset by holding the PB pin low for more than 8 or 15 s, depending on the value of the TRST bit. All rails are shut down by the sequencer and all register values reset to their default values. Rails not controlled by the sequencer are shut down additionally. Note: the RESET function power-cycles the device and only temporarily shuts down the output rails. Resetting the device does not lead to an OFF state. If the PB_IN pin is kept low for an extended amount of time, the device continues to cycle between the ACTIVE and RESET state, entering the RESET every 8 or 15 s.

The device is also reset if a PGOOD or OTS fault occurs. The TPS65216 remains in the RECOVERY state until the fault is removed, at which time it transitions back to the ACTIVE state.

Copyright © 2026 Texas Instruments Incorporated

7 Register Maps

7.1 Password Protection

Registers 0x11 through 0x26 are protected against accidental write by a 8-bit password. The password must be written prior to writing to a protected register and automatically resets to 0x00 after the next I^2C transaction, regardless of the register accessed or transaction type (read or write). The password is required for write access only and is not required for read access.

To write to a protected register:

1. Write the address of the destination register, XORed with the protection password (0x7D), to the PASSWORD register (0x10).
2. Write the data to the password protected register.
3. If the content of the PASSWORD register is XORed, with an address send that matches 0x7D, then the data transfers to the protected register. Otherwise, the transaction is ignored. In either case the PASSWORD register resets to 0x00 after the transaction.

The cycle must be repeated for any other register that is Level1 write protected.

7.2 FLAG Register

The FLAG register contains a bit for each power rail and GPO to keep track of the enable state of the rails while the system is suspended. The following rules apply to the FLAG register:

- The power-up default value for any flag bit is 0.
- Flag bits are read-only and cannot be written to.
- Upon entering a SUSPEND state, the flag bits are set to same value as their corresponding ENABLE bits. Rails and GPOs enabled in a SUSPEND state have flag bits set to 1, while all other flag bits are set to 0. Flag bits are not updated while in the SUSPEND state or when exiting the SUSPEND state.
- The FLAG register is static in WAIT_PWR_EN and ACTIVE state. The FLAG register reflects the enable state of DCDC1, DCDC2, DCDC3, DCDC4, and LDO1; and, reflects the enable state of GPO1, GPO2, and GPO3 during the last SUSPEND state.

The host processor reads the FLAG register to determine if the system powered up from the OFF or SUSPEND state. In the SUSPEND state, typically the DDR memory is kept in self refresh mode and therefore the DC3_FLG or DC4_FLG bits are set.

Copyright © 2026 Texas Instruments Incorporated

7.3 TPS65216 Registers

Table 7-1 lists the memory-mapped registers for the TPS65216. All register offset addresses not listed in Table 7-1 should be considered as reserved locations and the register contents should not be modified.

Table 7-1. TPS65216 Registers

SUBADDRESS	ACRONYM	REGISTER NAME	R/W	PASSWORD PROTECTED	SECTION
0x00	CHIPID	CHIP ID	R	No	Go
0x01	INT1	INTERRUPT 1	R	No	Go
0x02	INT2	INTERRUPT 2	R	No	Go
0x03	INT_MASK1	INTERRUPT MASK 1	R/W	No	Go
0x04	INT_MASK2	INTERRUPT MASK 2	R/W	No	Go
0x05	STATUS	STATUS	R	No	Go
0x06	CONTROL	CONTROL	R/W	No	Go
0x07	FLAG	FLAG	R	No	Go
0x10	PASSWORD	PASSWORD	R/W	No	Go
0x11	ENABLE1	ENABLE 1	R/W	Yes	Go
0x12	ENABLE2	ENABLE 2	R/W	Yes	Go
0x13	CONFIG1	CONFIGURATION 1	R/W	Yes	Go
0x14	CONFIG2	CONFIGURATION 2	R/W	Yes	Go
0x15	CONFIG3	CONFIGURATION 3	R/W	Yes	Go
0x16	DCDC1	DCDC1 CONTROL	R/W	Yes	Go
0x17	DCDC2	DCDC2 CONTROL	R/W	Yes	Go
0x18	DCDC3	DCDC3 CONTROL	R/W	Yes	Go
0x19	DCDC4	DCDC4 CONTROL	R/W	Yes	Go
0x1A	SLEW	SLEW RATE CONTROL	R/W	Yes	Go
0x1B	LDO1	LDO1 CONTROL	R/W	Yes	Go
0x20	SEQ1	SEQUENCER 1	R/W	Yes	Go
0x21	SEQ2	SEQUENCER 2	R/W	Yes	Go
0x22	SEQ3	SEQUENCER 3	R/W	Yes	Go
0x23	SEQ4	SEQUENCER 4	R/W	Yes	Go
0x24	SEQ5	SEQUENCER 5	R/W	Yes	Go
0x25	SEQ6	SEQUENCER 6	R/W	Yes	Go
0x26	SEQ7	SEQUENCER 7	R/W	Yes	Go

Table 7-2 explains the common abbreviations used in this section.

Table 7-2. Common Abbreviations

Abbreviation	Description
R	Read
W	Write
R/W	Read and write capable
E2	Backed by EEPROM
h	Hexadecimal notation of a group of bits
b	Hexadecimal notation of a bit or group of bits
X	Do not care reset value

Copyright © 2026 Texas Instruments Incorporated

7.4 CHIPID Register (subaddress = 0x00) [reset = 0x05]

CHIPID is shown in Figure 7-1 and described in Table 7-3.

Return to Summary Table.

Figure 7-1. CHIPID Register

7	6	5	4	3	2	1	0
CHIP					REV		
R-0h					R-5h		

Table 7-3. CHIPID Register Field Descriptions

Bit	Field	Type	Reset	Description
7-3	CHIP	R	0h	Chip ID: 0h = TPS65216 1h = Future use ... 1Fh = Future use
2-0	REV	R	5h	Revision code: 0h = Revision 1.0 1h = Revision 1.1 2h = Revision 2.0 3h = Revision 2.1 4h = Revision 3.0 5h = Revision 4.0 (D0) 6h = Future use 7h = Future use

Copyright © 2026 Texas Instruments Incorporated

7.5 INT1 Register (subaddress = 0x01) [reset = 0x00]

INT1 is shown in Figure 7-2 and described in Table 7-4.

Return to Summary Table.

Figure 7-2. INT1 Register

7	6	5	4	3	2	1	0
RESERVED		VPRG	AC	PB	HOT	RESERVED	PRGC
R-00b		R-0b	R-0b	R-0b	R-0b	R-0b	R-0b

Table 7-4. INT1 Register Field Descriptions

Bit	Field	Type	Reset	Description
7-6	RESERVED	R	00b	
5	VPRG	R	0b	Programming voltage interrupt: 0b = No significance. 1b = Input voltage is too low for programming power-up default values.
4	AC	R	0b	AC_DET pin status change interrupt. Note: Status information is available in STATUS register. 0b = No change in status. 1b = AC_DET status change (AC_DET pin changed high to low or low to high).
3	PB	R	0b	Push-button status change interrupt. Note: Status information is available in STATUS register 0b = No change in status. 1b = Push-button status change (PB changed high to low or low to high).
2	HOT	R	0b	Thermal shutdown early warning: 0b = Chip temperature is below HOT threshold. 1b = Chip temperature exceeds HOT threshold.
1	RESERVED	R	0b	
0	PRGC	R	0b	EEPROM programming complete interrupt: 0b = No significance. 1b = Programming of power-up default settings has completed successfully.

Copyright © 2026 Texas Instruments Incorporated

7.6 INT2 Register (subaddress = 0x02) [reset = 0x00]

INT2 is shown in Figure 7-3 and described in Table 7-5.

Return to Summary Table.

Figure 7-3. INT2 Register

7	6	5	4	3	2	1	0
RESERVED		LS_F	RESERVED	RESERVED	LS_I	RESERVED	RESERVED
R-00b		R-0b	R-0b	R-0b	R-0b	R-0b	R-0b

Table 7-5. INT2 Register Field Descriptions

Bit	Field	Type	Reset	Description
7-6	RESERVED	R	00b	
5	LS_F	R	0b	Load switch fault interrupt: 0b = No fault. Switch is working normally. 1b = Load switch exceeded operating temperature limit and is temporarily disabled.
4	RESERVED	R	0b	
3	RESERVED	R	0b	
2	LS_I	R	0b	Load switch current-limit interrupt: 0b = Load switch is disabled or not in current limit. 1b = Load switch is actively limiting the output current (output load is exceeding current limit value).
1	RESERVED	R	0b	
0	RESERVED	R	0b	

Copyright © 2026 Texas Instruments Incorporated

7.7 INT_MASK1 Register (subaddress = 0x03) [reset = 0x00]

INT_MASK1 is shown in Figure 7-4 and described in Table 7-6.

Return to Summary Table.

Figure 7-4. INT_MASK1 Register

7	6	5	4	3	2	1	0
RESERVED		VPRGM	ACM	PBM	HOTM	RESERVED	PRGCM
R-00b		R/W-0b	R/W-0b	R/W-0b	R/W-0b	R/W-0b	R/W-0b

Table 7-6. INT_MASK1 Register Field Descriptions

Bit	Field	Type	Reset	Description
7-6	RESERVED	R	00b	
5	VPRGM	R/W	0b	Programming voltage interrupt mask bit. Note: mask bit has no effect on monitoring function: 0b = Interrupt is unmasked (interrupt event pulls nINT pin low). 1b = Interrupt is masked (interrupt has no effect on nINT pin).
4	ACM	R/W	0b	AC_DET interrupt masking bit: 0b = Interrupt is unmasked (interrupt event pulls nINT pin low). 1b = Interrupt is masked (interrupt has no effect on nINT pin). Note: mask bit has no effect on monitoring function.
3	PBM	R/W	0b	PB interrupt masking bit. Note: mask bit has no effect on monitoring function. 0b = Interrupt is unmasked (interrupt event pulls nINT pin low). 1b = Interrupt is masked (interrupt has no effect on nINT pin).
2	HOTM	R/W	0b	HOT interrupt masking bit. Note: mask bit has no effect on monitoring function. 0b = Interrupt is unmasked (interrupt event pulls nINT pin low). 1b = Interrupt is masked (interrupt has no effect on nINT pin).
1	RESERVED	R/W	0b	
0	PRGCM	R/W	0b	PRGC interrupt masking bit. Note: mask bit has no effect on monitoring function. 0b = Interrupt is unmasked (interrupt event pulls nINT pin low). 1b = Interrupt is masked (interrupt has no effect on nINT pin).

Copyright © 2026 Texas Instruments Incorporated

7.8 INT_MASK2 Register (subaddress = 0x04) [reset = 0x00]

INT_MASK2 is shown in Table 7-7 and described in Table 7-8.

Return to Summary Table.

Table 7-7. INT_MASK2 Register

7	6	5	4	3	2	1	0
RESERVED		LS_FM	RESERVED	RESERVED	LS_IM	RESERVED	RESERVED
R-00b		R/W-0b	R/W-0b	R/W-0b	R/W-0b	R/W-0b	R/W-0b

Table 7-8. INT_MASK2 Register Field Descriptions

Bit	Field	Type	Reset	Description
7-6	RESERVED	R	00b	
5	LS_FM	R/W	0b	LS fault interrupt mask bit. Note: mask bit has no effect on monitoring function. 0b = Interrupt is unmasked (interrupt event pulls nINT pin low). 1b = Interrupt is masked (interrupt has no effect on nINT pin).
4	RESERVED	R/W	0b	
3	RESERVED	R/W	0b	
2	LS_IM	R/W	0b	LS current-limit interrupt mask bit. Note: mask bit has no effect on monitoring function. 0b = Interrupt is unmasked (interrupt event pulls nINT pin low). 1b = Interrupt is masked (interrupt has no effect on nINT pin).
1	RESERVED	R/W	0b	
0	RESERVED	R/W	0b	

Copyright © 2026 Texas Instruments Incorporated

7.9 STATUS Register (subaddress = 0x05) [reset = 00XXXXXXb]

Register mask: C0h

STATUS is shown in Table 7-9 and is described in Table 7-10.

Return to Summary Table.

Table 7-9. STATUS Register

7	6	5	4	3	2	1	0
RESERVED	EE	AC_STATE	PB_STATE	STATE		RESERVED	
R-0b	R-0b	R-X	R-X	R-X		R-X	

Table 7-10. STATUS Register Field Descriptions

Bit	Field	Type	Reset	Description
7	RESERVED	R	0b	
6	EE	R	0b	EEPROM status: 0b = EEPROM values have not been changed from factory default setting. 1b = EEPROM values have been changed from factory default settings.
5	AC_STATE	R	X	AC_DET input status bit: 0b = AC_DET input is inactive (AC_DET input pin is high). 1b = AC_DET input is active (AC_DET input is low).
4	PB_STATE	R	X	PB input status bit: 0b = Push Button input is inactive (PB input pin is high). 1b = Push Button input is active (PB input pin is low).
3-2	STATE	R	X	State machine STATE indication: 0h = PMIC is in transitional state. 1h = PMIC is in WAIT_PWR_EN state. 2h = PMIC is in ACTIVE state. 3h = PMIC is in SUSPEND state.
1-0	RESERVED	R	X	

Copyright © 2026 Texas Instruments Incorporated

7.10 CONTROL Register (subaddress = 0x06) [reset = 0x00]

CONTROL is shown in Figure 7-5 and described in Table 7-11.

Return to Summary Table.

Figure 7-5. CONTROL Register

7	6	5	4	3	2	1	0
RESERVED						OFFnPFO	RESERVED
R-0000 00b						R/W-0b	R/W-0b

Table 7-11. CONTROL Register Field Descriptions

Bit	Field	Type	Reset	Description
7-2	RESERVED	R	0000 00b	
1	OFFnPFO	R/W	0b	Power-fail shutdown bit: 0b = nPFO has no effect on PMIC state. 1b = All rails are shut down and PMIC enters OFF state when PFI comparator trips (nPFO is low).
0	RESERVED	R/W	0b	

Copyright © 2026 Texas Instruments Incorporated

7.11 FLAG Register (subaddress = 0x07) [reset = 0x00]

FLAG is shown in Figure 7-6 and described in Table 7-12.

Return to Summary Table.

Figure 7-6. FLAG Register

7	6	5	4	3	2	1	0
GPO2_FLG	RESERVED	GPO1_FLG	LDO1_FLG	DC4_FLG	DC3_FLG	DC2_FLG	DC1_FLG
R-0b	R-0b	R-0b	R-0b	R-0b	R-0b	R-0b	R-0b

Table 7-12. FLAG Register Field Descriptions

Bit	Field	Type	Reset	Description
7	GPO2_FLG	R	0b	GPO2 Flag bit: 0b = Device powered up from OFF or SUSPEND state and GPO2 was disabled while in SUSPEND. 1b = Device powered up from SUSPEND state and GPO2 was enabled while in SUSPEND.
6	RESERVED	R	0b	
5	GPO1_FLG	R	0b	GPO1 Flag bit: 0b = Device powered up from OFF or SUSPEND state and GPO1 was disabled while in SUSPEND. 1b = Device powered up from SUSPEND state and GPO1 was enabled while in SUSPEND.
4	LDO1_FLG	R	0b	LDO1 Flag bit: 0b = Device powered up from OFF or SUSPEND state and LDO1 was disabled while in SUSPEND. 1b = Device powered up from SUSPEND state and LDO1 was enabled while in SUSPEND.
3	DC4_FLG	R	0b	DCDC4 Flag bit: 0b = Device powered up from OFF or SUSPEND state and DCDC4 was disabled while in SUSPEND. 1b = Device powered up from SUSPEND state and DCDC4 was enabled while in SUSPEND.
2	DC3_FLG	R	0b	DCDC3 Flag bit: 0b = Device powered up from OFF or SUSPEND state and DCDC3 was disabled while in SUSPEND. 1b = Device powered up from SUSPEND state and DCDC3 was enabled while in SUSPEND.
1	DC2_FLG	R	0b	DCDC2 Flag bit: 0b = Device powered up from OFF or SUSPEND state and DCDC2 was disabled while in SUSPEND. 1b = Device powered up from SUSPEND state and DCDC2 was enabled while in SUSPEND.
0	DC1_FLG	R	0b	DCDC1 Flag bit: 0b = Device powered up from OFF or SUSPEND state and DCDC1 was disabled while in SUSPEND. 1b = Device powered up from SUSPEND state and GDCDC1PO3 was enabled while in SUSPEND.

Copyright © 2026 Texas Instruments Incorporated

7.12 PASSWORD Register (subaddress = 0x10) [reset = 0x00]

PASSWORD is shown in Figure 7-7 and described in Table 7-13.

Return to Summary Table.

Figure 7-7. PASSWORD Register

7	6	5	4	3	2	1	0
PWRD							
R/W-00h							

Table 7-13. PASSWORD Register Field Descriptions

Bit	Field	Type	Reset	Description
7-0	PWRD	R/W	00h	Register is used for accessing password protected registers (see Password Protection for details).. Read-back always yields 0x00.

7.13 ENABLE1 Register (subaddress = 0x11) [reset = 0x00]

ENABLE1 is shown in Figure 7-8 and described in Table 7-14.

Return to Summary Table.

Password protected.

Figure 7-8. ENABLE1 Register

7	6	5	4	3	2	1	0
RESERVED		RESERVED	RESERVED	DC4_EN	DC3_EN	DC2_EN	DC1_EN
R-00b		R/W-0b	R/W-0b	R/W-0b	R/W-0b	R/W-0b	R/W-0b

Table 7-14. ENABLE1 Register Field Descriptions

Bit	Field	Type	Reset	Description
7-6	RESERVED	R	00b	
5	RESERVED	R/W	0b	
4	RESERVED	R/W	0b	
3	DC4_EN	R/W	0b	DCDC4 enable bit. Note: At power-up and down this bit is automatically updated by the internal power sequencer. 0b = Disabled 1b = Enabled
2	DC3_EN	R/W	0b	DCDC3 enable bit. Note: At power-up and down this bit is automatically updated by the internal power sequencer. 0b = Disabled 1b = Enabled
1	DC2_EN	R/W	0b	DCDC2 enable bit. Note: At power-up and down this bit is automatically updated by the internal power sequencer. 0b = Disabled 1b = Enabled
0	DC1_EN	R/W	0b	DCDC1 enable bit. Note: At power-up and down this bit is automatically updated by the internal power sequencer. 0b = Disabled 1b = Enabled

Copyright © 2026 Texas Instruments Incorporated

7.14 ENABLE2 Register (subaddress = 0x12) [reset = 0x00]

ENABLE2 is shown in Figure 7-9 and described in Table 7-15.

Return to Summary Table.

Password protected.

Figure 7-9. ENABLE2 Register

7	6	5	4	3	2	1	0
RESERVED	GPIO2	RESERVED	GPIO1	LS_EN	RESERVED	RESERVED	LDO1_EN
R-0b	R/W-0b	R/W-0b	R/W-0b	R/W-0b	R/W-0b	R/W-0b	R/W-0b

Table 7-15. ENABLE2 Register Field Descriptions

Bit	Field	Type	Reset	Description
7	RESERVED	R	0b	
6	GPIO2	R/W	0b	General purpose output 2 / reset polarity. Note: If DC12_RST bit (register 0x14) is set to 1 this bit has no function. 0b = GPIO2 output is driven low. 1b = GPIO2 output is HiZ.
5	RESERVED	R/W	0b	
4	GPIO1	R/W	0b	General purpose output 1. Note: If IO_SEL bit (register 0x13) is set to 1 this bit has no function. 0b = GPO1 output is driven low. 1b = GPO1 output is HiZ.
3	LS_EN	R/W	0b	Load switch (LS) enable bit. 0b = Disabled 1b = Enabled
2	RESERVED	R/W	0b	
1	RESERVED	R/W	0b	
0	LDO1_EN	R/W	0b	LDO1 enable bit. 0b = Disabled 1b = Enabled Note: At power-up and down this bit is automatically updated by the internal power sequencer.

Copyright © 2026 Texas Instruments Incorporated

7.15 CONFIG1 Register (subaddress = 0x13) [reset = 0x04C]

CONFIG1 is shown in Figure 7-10 and described in Table 7-16.

Return to Summary Table.

Password protected.

Figure 7-10. CONFIG1 Register

7	6	5	4	3	2	1	0
TRST	RESERVED	RESERVED	PGDLY		STRICT	UVLO	
R/W-0b	R/W-1b	R/W-0b	R/W-01b		R/W-1b	R/W-00b	

Table 7-16. CONFIG1 Register Field Descriptions

Bit	Field	Type	Reset	Description
7	TRST	R/W, E2	0b	Push-button reset time constant: 0b = 8 s 1b = 15 s
6	RESERVED	R/W	1b	
5	RESERVED	R/W	0b	
4-3	PGDLY	R/W, E2	01b	Power-Good delay. Note: Power-good delay applies to rising-edge only (power-up), not falling edge (power-down or fault). 00b = 10 ms 01b = 20 ms 10b = 50 ms 11b = 150 ms
2	STRICT	R/W, E2	1b	Supply Voltage Supervisor Sensitivity selection. See Electrical Characteristics for details. 0b = Power-good threshold (VOUT falling) has wider limits. Over-voltage is not monitored. 1b = Power-good threshold (VOUT falling) has tight limits. Over-voltage is monitored.
1-0	UVLO	R/W, E2	00b	UVLO setting 00b = 2.75 V 01b = 2.95 V 10b = 3.25 V 11b = 3.35 V

Copyright © 2026 Texas Instruments Incorporated

7.16 CONFIG2 Register (subaddress = 0x14) [reset = 0xC0]

CONFIG2 is shown in Figure 7-11 and described in Table 7-17.

Return to Summary Table.

Password protected.

Figure 7-11. CONFIG2 Register

7	6	5	4	3	2	1	0
DC12_RST	UVLOHYS	RESERVED		LSILIM		RESERVED	
R/W-1b	R/W-1b	R-00b		R/W-00b		R/W-00b	

Table 7-17. CONFIG2 Register Field Descriptions

Bit	Field	Type	Reset	Description
7	DC12_RST	R/W, E2	1b	DCDC1 and DCDC2 reset-pin enable: 0b = GPIO2 is configured as general-purpose output. 1b = GPIO2 is configured as warm-reset input to DCDC1 and DCDC2.
6	UVLOHYS	R/W, E2	1b	UVLO hysteresis: 0b = 200 mV 1b = 400 mV
5-4	RESERVED	R	00b	
3-2	LSILIM	R/W	00b	Load switch (LS) current limit selection: 00b = 100 mA, (MIN = 98 mA) 01b = 200 mA, (MIN = 194 mA) 10b = 500 mA, (MIN = 475 mA) 11b = 1000 mA, (MIN = 900 mA) See the LS current limit specification in Electrical Characteristics for more details.
1-0	RESERVED	R/W	00b	

Copyright © 2026 Texas Instruments Incorporated

7.17 CONFIG3 Register (subaddress = 0x15) [reset = 0x0]

CONFIG3 is shown in Figure 7-12 and described in Table 7-18.

Return to Summary Table.

Password protected.

Figure 7-12. CONFIG3 Register

7	6	5	4	3	2	1	0
RESERVED		LSnPFO	RESERVED	RESERVED	LSDCHRG	RESERVED	RESERVED
R-00b		R/W-0b	R/W-0b	R/W-0b	R/W-0b	R/W-0b	R/W-0b

Table 7-18. CONFIG3 Register Field Descriptions

Bit	Field	Type	Reset	Description
7-6	RESERVED	R	00b	
5	LSnPFO	R/W	0b	Load switch power-fail disable bit: 0b = Load switch status is not affected by power-fail comparator. 1b = Load switch is disabled if power-fail comparator trips (nPFO is low).
4	RESERVED	R/W	0b	
3	RESERVED	R/W	0b	
2	LSDCHRG	R/W	0b	Load switch discharge enable bit: 0b = Active discharge is disabled. 1b = Active discharge is enabled (load switch output is actively discharged when switch is OFF).
1	RESERVED	R/W	0b	
0	RESERVED	R/W	0b	

Copyright © 2026 Texas Instruments Incorporated

7.18 DCDC1 Register (offset = 0x16) [reset = 0x99]

DCDC1 is shown in Figure 7-13 and described in Table 7-19.

Return to Summary Table.

Note 1: This register is password protected. For more information, see Password Protection.
Note 2: A 5-ms blanking time of the over-voltage and under-voltage monitoring occurs when a write is performed on the DCDC1 register.
Note 3: To change the output voltage of DCDC1, the GO bit or the GODSBL bit must be set to 1b in register 0x1A.

Figure 7-13. DCDC1 Register

7	6	5	4	3	2	1	0
PFM	RESERVED	DCDC1					
R/W-1b	R-0b	R/W-19h					

Table 7-19. DCDC1 Register Field Descriptions

Bit	Field	Type	Reset	Description
7	PFM	R/W	1b	Pulse Frequency Modulation (PFM, also known as pulse-skip-mode) enable. PFM mode improves light-load efficiency. Actual PFM mode operation depends on load condition. 0b = Disabled (forced PWM) 1b = Enabled
6	RESERVED	R	0b	

Copyright © 2026 Texas Instruments Incorporated

Table 7-19. DCDC1 Register Field Descriptions (continued)

Bit	Field	Type	Reset	Description
5-0	DCDC1	R/W, E2	19h	DCDC1 output voltage setting: 0h = 0.850 1h = 0.860 2h = 0.870 3h = 0.880 4h = 0.890 5h = 0.900 6h = 0.910 7h = 0.920 8h = 0.930 9h = 0.940 Ah = 0.950 Bh = 0.960 Ch = 0.970 Dh = 0.980 Eh = 0.990 Fh = 1.000 10h = 1.010 11h = 1.020 12h = 1.030 13h = 1.040 14h = 1.050 15h = 1.060 16h = 1.070 17h = 1.080 18h = 1.090 19h = 1.100 1Ah = 1.110 1Bh = 1.120 1Ch = 1.130 1Dh = 1.140 1Eh = 1.150 1Fh = 1.160 20h = 1.170 21h = 1.180 22h = 1.190 23h = 1.200

Copyright © 2026 Texas Instruments Incorporated

Table 7-19. DCDC1 Register Field Descriptions (continued)

Bit	Field	Type	Reset	Description
				24h = 1.210 25h = 1.220 26h = 1.230 27h = 1.240 28h = 1.250 29h = 1.260 2Ah = 1.270 2Bh = 1.280 2Ch = 1.290 2Dh = 1.300 2Eh = 1.310 2Fh = 1.320 30h = 1.330 31h = 1.340 32h = 1.350 33h = 1.375 34h = 1.400 35h = 1.425 36h = 1.450 37h = 1.475 38h = 1.500 39h = 1.525 3Ah = 1.550 3Bh = 1.575 3Ch = 1.600 3Dh = 1.625 3Eh = 1.650 3Fh = 1.675

Copyright © 2026 Texas Instruments Incorporated

7.19 DCDC2 Register (subaddress = 0x17) [reset = 0x99]

DCDC2 is shown in Figure 7-14 and described in Table 7-20.

Return to Summary Table.

Note 1: This register is password protected. For more information, see Password Protection.
Note 2: A 5-ms blanking time of the over-voltage and under-voltage monitoring occurs when a write is performed on the DCDC2 register.
Note 3: To change the output voltage of DCDC2, the GO bit or the GODSBL bit must be set to 1b in register 0x1A.

Figure 7-14. DCDC2 Register

7	6	5	4	3	2	1	0
PFM	RESERVED	DCDC2					
R/W-1b	R-0b	R/W-19h					

Table 7-20. DCDC2 Register Field Descriptions

Bit	Field	Type	Reset	Description
7	PFM	R/W	1b	Pulse frequency modulation (PFM, also known as pulse-skip-mode) enable. PFM mode improves light-load efficiency. Actual PFM mode operation depends on load condition. 0b = Disabled (forced PWM) 1b = Enabled
6	RESERVED	R	0b	

Copyright © 2026 Texas Instruments Incorporated

Table 7-20. DCDC2 Register Field Descriptions (continued)

Bit	Field	Type	Reset	Description
5-0	DCDC2	R/W, E2	19h	DCDC2 output voltage setting: 0h = 0.850 1h = 0.860 2h = 0.870 3h = 0.880 4h = 0.890 5h = 0.900 6h = 0.910 7h = 0.920 8h = 0.930 9h = 0.940 Ah = 0.950 Bh = 0.960 Ch = 0.970 Dh = 0.980 Eh = 0.990 Fh = 1.000 10h = 1.010 11h = 1.020 12h = 1.030 13h = 1.040 14h = 1.050 15h = 1.060 16h = 1.070 17h = 1.080 18h = 1.090 19h = 1.100 1Ah = 1.110 1Bh = 1.120 1Ch = 1.130 1Dh = 1.140 1Eh = 1.150 1Fh = 1.160 20h = 1.170 21h = 1.180 22h = 1.190 23h = 1.200

Copyright © 2026 Texas Instruments Incorporated

Table 7-20. DCDC2 Register Field Descriptions (continued)

Bit	Field	Type	Reset	Description
				24h = 1.210 25h = 1.220 26h = 1.230 27h = 1.240 28h = 1.250 29h = 1.260 2Ah = 1.270 2Bh = 1.280 2Ch = 1.290 2Dh = 1.300 2Eh = 1.310 2Fh = 1.320 30h = 1.330 31h = 1.340 32h = 1.350 33h = 1.375 34h = 1.400 35h = 1.425 36h = 1.450 37h = 1.475 38h = 1.500 39h = 1.525 3Ah = 1.550 3Bh = 1.575 3Ch = 1.600 3Dh = 1.625 3Eh = 1.650 3Fh = 1.675

Copyright © 2026 Texas Instruments Incorporated

7.20 DCDC3 Register (subaddress = 0x18) [reset = 0x8C]

DCDC3 is shown in Figure 7-15 and described in Table 7-21.

Return to Summary Table.

Note 1: This register is password protected. For more information, see Password Protection.
Note 2: A 5-ms blanking time of the over-voltage and under-voltage monitoring occurs when a write is performed on the DCDC3 register.

Note

Power-up default may differ depending on RSEL value. See DCDC3 and DCDC4 Power-Up Default Selection for details.

Figure 7-15. DCDC3 Register

7	6	5	4	3	2	1	0
PFM	RESERVED	DCDC3					
R/W-1b	R-0b	R/W-Ch					

Table 7-21. DCDC3 Register Field Descriptions

Bit	Field	Type	Reset	Description
7	PFM	R/W	1b	Pulse Frequency Modulation (PFM, also known as pulse-skip-mode) enable. PFM mode improves light-load efficiency. Actual PFM mode operation depends on load condition. 0b = Disabled (forced PWM) 1b = Enabled
6	RESERVED	R	0b	

Copyright © 2026 Texas Instruments Incorporated

Table 7-21. DCDC3 Register Field Descriptions (continued)

Bit	Field	Type	Reset	Description
5-0	DCDC3	R/W, E2	Ch	DCDC3 output voltage setting: 0h = 0.900 1h = 0.925 2h = 0.950 3h = 0.975 4h = 1.000 5h = 1.025 6h = 1.050 7h = 1.075 8h = 1.100 9h = 1.125 Ah = 1.150 Bh = 1.175 Ch = 1.200 Dh = 1.225 Eh = 1.250 Fh = 1.275 10h = 1.300 11h = 1.325 12h = 1.350 13h = 1.375 14h = 1.400 15h = 1.425 16h = 1.450 17h = 1.475 18h = 1.500 19h = 1.525 1Ah = 1.550 1Bh = 1.600 1Ch = 1.650 1Dh = 1.700 1Eh = 1.750 1Fh = 1.800 20h = 1.850 21h = 1.900 22h = 1.950 23h = 2.000

Copyright © 2026 Texas Instruments Incorporated

Table 7-21. DCDC3 Register Field Descriptions (continued)

Bit	Field	Type	Reset	Description
				24h = 2.050 25h = 2.100 26h = 2.150 27h = 2.200 28h = 2.250 29h = 2.300 2Ah = 2.350 2Bh = 2.400 2Ch = 2.450 2Dh = 2.500 2Eh = 2.550 2Fh = 2.600 30h = 2.650 31h = 2.700 32h = 2.750 33h = 2.800 34h = 2.850 35h = 2.900 36h = 2.950 37h = 3.000 38h = 3.050 39h = 3.100 3Ah = 3.150 3Bh = 3.200 3Ch = 3.250 3Dh = 3.300 3Eh = 3.350 3Fh = 3.400

Copyright © 2026 Texas Instruments Incorporated

7.21 DCDC4 Register (subaddress = 0x19) [reset = 0xB2]

DCDC4 is shown in Figure 7-16 and described in Table 7-22.

Return to Summary Table.

Note 1: This register is password protected. For more information, see Password Protection.
Note 2: A 5-ms blanking time of the over-voltage and under-voltage monitoring occurs when a write is performed on the DCDC4 register.

Note

Power-up default may differ depending on RSEL value. See DCDC3 and DCDC4 Power-Up Default Selection for details. The Reserved setting should not be selected and the output voltage settings should not be modified while the converter is operating.

Figure 7-16. DCDC4 Register

7	6	5	4	3	2	1	0
PFM	RESERVED	DCDC4					
R/W-1b	R-0b	R/W-32h					

Table 7-22. DCDC4 Register Field Descriptions

Bit	Field	Type	Reset	Description
7	PFM	R/W	1b	Pulse Frequency Modulation (PFM, also known as pulse-skip-mode) enable. PFM mode improves light-load efficiency. Actual PFM mode operation depends on load condition. 0b = Disabled (forced PWM) 1b = Enabled
6	RESERVED	R	0b	

Copyright © 2026 Texas Instruments Incorporated

Table 7-22. DCDC4 Register Field Descriptions (continued)

Bit	Field	Type	Reset	Description
5-0	DCDC4	R/W, E2	32h	DCDC4 output voltage setting: 0h = 1.175 1h = 1.200 2h = 1.225 3h = 1.250 4h = 1.275 5h = 1.300 6h = 1.325 7h = 1.350 8h = 1.375 9h = 1.400 Ah = 1.425 Bh = 1.450 Ch = 1.475 Dh = 1.500 Eh = 1.525 Fh = 1.550 10h = 1.600 11h = 1.650 12h = 1.700 13h = 1.750 14h = 1.800 15h = 1.850 16h = 1.900 17h = 1.950 18h = 2.000 19h = 2.050 1Ah = 2.100 1Bh = 2.150 1Ch = 2.200 1Dh = 2.250 1Eh = 2.300 1Fh = 2.3500 20h = 2.400 21h = 2.450 22h = 2.500 23h = 2.550

Copyright © 2026 Texas Instruments Incorporated

Table 7-22. DCDC4 Register Field Descriptions (continued)

Bit	Field	Type	Reset	Description
				24h = 2.600 25h = 2.650 26h = 2.700 27h = 2.750 28h = 2.800 29h = 2.850 2Ah = 2.900 2Bh = 2.950 2Ch = 3.000 2Dh = 3.050 2Eh = 3.100 2Fh = 3.150 30h = 3.200 31h = 3.250 32h = 3.300 33h = 3.350 34h = 3.400 35h = reserved 36h = reserved 37h = reserved 38h = reserved 39h = reserved 3Ah = reserved 3Bh = reserved 3Ch = reserved 3Dh = reserved 3Eh = reserved 3Fh = reserved

Copyright © 2026 Texas Instruments Incorporated

7.22 SLEW Register (subaddress = 0x1A) [reset = 0x06]

SLEW is shown in Figure 7-17 and described in Table 7-23.

Return to Summary Table.

Note

Slew-rate control applies to DCDC1 and DCDC2 only. If changing from a higher voltage to lower voltage while STRICT = 1 and converters are in a no load state, PFM bit for DCDC1 and DCDC2 must be set to 0.

Figure 7-17. SLEW Register

7	6	5	4	3	2	1	0
GO	GODSBL	RESERVED			SLEW		
R/W-0b	R/W-0b	R-000b			R/W-6h		

Table 7-23. SLEW Register Field Descriptions

Bit	Field	Type	Reset	Description
7	GO	R/W	0b	Go bit. Note: Bit is automatically reset at the end of the voltage transition. 0b = No change 1b = Initiates the transition from present state to the output voltage setting currently stored in DCDC1 and DCDC2 register. SLEW setting does apply.
6	GODSBL	R/W	0b	Go disable bit 0b = Enabled 1b = Disabled; DCDC1 and DCDC2 output voltage changes whenever set-point is updated in DCDC1 and DCDC2 register without having to write to the GO bit. SLEW setting does apply.
5-3	RESERVED	R	000b	
2-0	SLEW	R/W	6h	Output slew rate setting: 0h = 160 µs/step (0.0625 mV/µs at 10 mV per step) 1h = 80 µs/step (0.125 mV/µs at 10 mV per step) 2h = 40 µs/step (0.250 mV/µs at 10 mV per step) 3h = 20 µs/step (0.500 mV/µs at 10 mV per step) 4h = 10 µs/step (1.0 mV/µs at 10 mV per step) 5h = 5 µs/step (2.0 mV/µs at 10 mV per step) 6h = 2.5 µs/step (4.0 mV/µs at 10 mV per step) 7h = Immediate; slew rate is only limited by control loop response time. Note: The actual slew rate depends on the voltage step per code. Refer to DCDCx registers for details.

Copyright © 2026 Texas Instruments Incorporated

7.23 LDO1 Register (subaddress = 0x1B) [reset = 0x1F]

LDO1 is shown in Figure 7-18 and described in Table 7-24.

Return to Summary Table.

Note 1: This register is password protected. For more information, see Password Protection.
Note 2: A 5-ms blanking time of the over-voltage and under-voltage monitoring occurs when a write is performed on the LDO1 register.

Figure 7-18. LDO1 Register

7	6	5	4	3	2	1	0
RESERVED		LDO1					
R-00b		R/W-1Fh					

Table 7-24. LDO1 Register Field Descriptions

Bit	Field	Type	Reset	Description
7-6	RESERVED	R	00b	
5-0	LDO1	R/W, E2	1Fh	LDO1 output voltage setting: 0h = 0.900 1h = 0.925 2h = 0.950 3h = 0.975 4h = 1.000 5h = 1.025 6h = 1.050 7h = 1.075 8h = 1.100 9h = 1.125 Ah = 1.150 Bh = 1.175 Ch = 1.200 Dh = 1.225 Eh = 1.250 Fh = 1.275 10h = 1.300 11h = 1.325 12h = 1.350 13h = 1.375 14h = 1.400 15h = 1.425 16h = 1.450 17h = 1.475 18h = 1.500 19h = 1.525

Copyright © 2026 Texas Instruments Incorporated

Table 7-24. LDO1 Register Field Descriptions (continued)

Bit	Field	Type	Reset	Description
				1Ah = 1.550 1Bh = 1.600 1Ch = 1.650 1Dh = 1.700 1Eh = 1.750 1Fh = 1.800 20h = 1.850 21h = 1.900 22h = 1.950 23h = 2.000 24h = 2.050 25h = 2.100 26h = 2.150 27h = 2.200 28h = 2.250 29h = 2.300 2Ah = 2.350 2Bh = 2.400 2Ch = 2.450 2Dh = 2.500 2Eh = 2.550 2Fh = 2.600 30h = 2.650 31h = 2.700 32h = 2.750 33h = 2.800 34h = 2.850 35h = 2.900 36h = 2.950 37h = 3.000 38h = 3.050 39h = 3.100 3Ah = 3.150 3Bh = 3.200 3Ch = 3.250 3Dh = 3.300 3Eh = 3.350 3Fh = 3.400

Copyright © 2026 Texas Instruments Incorporated

7.24 SEQ1 Register (subaddress = 0x20) [reset = 0x00]

SEQ1 is shown in Figure 7-19 and described in Table 7-25.

Return to Summary Table.

Password protected.

Figure 7-19. SEQ1 Register

7	6	5	4	3	2	1	0
DLY8	DLY7	DLY6	DLY5	DLY4	DLY3	DLY2	DLY1
R/W-0b	R/W-0b	R/W-0b	R/W-0b	R/W-0b	R/W-0b	R/W-0b	R/W-0b

Table 7-25. SEQ1 Register Field Descriptions

Bit	Field	Type	Reset	Description
7	DLY8	R/W, E2	0b	Delay8 (occurs after Strobe 8 and before Strobe 9.) 0b = 2 ms 1b = 5 ms
6	DLY7	R/W, E2	0b	Delay7 (occurs after Strobe 7 and before Strobe 8.) 0b = 2 ms 1b = 5 ms
5	DLY6	R/W, E2	0b	Delay6 (occurs after Strobe 6 and before Strobe 7.) 0b = 2 ms 1b = 5 ms
4	DLY5	R/W, E2	0b	Delay5 (occurs after Strobe 5 and before Strobe 6.) 0b = 2 ms 1b = 5 ms
3	DLY4	R/W, E2	0b	Delay4 (occurs after Strobe 4 and before Strobe 5.) 0b = 2 ms 1b = 5 ms
2	DLY3	R/W, E2	0b	Delay3 (occurs after Strobe 3 and before Strobe 4.) 0b = 2 ms 1b = 5 ms
1	DLY2	R/W, E2	0b	Delay2 (occurs after Strobe 2 and before Strobe 3.) 0b = 2 ms 1b = 5 ms
0	DLY1	R/W, E2	0b	Delay1 (occurs after Strobe 1 and before Strobe 2.) 0b = 2 ms 1b = 5 ms

Copyright © 2026 Texas Instruments Incorporated

7.25 SEQ2 Register (subaddress = 0x21) [reset = 0x00]

SEQ2 is shown in Figure 7-20 and described in Table 7-26.

Return to Summary Table.

Password protected.

Figure 7-20. SEQ2 Register

7	6	5	4	3	2	1	0
DLYFCTR	RESERVED						DLY9
R/W -0b	R-000 000b						R/W -0b

Table 7-26. SEQ2 Register Field Descriptions

Bit	Field	Type	Reset	Description
7	DLYFCTR	R/W, E2	0b	Power-down delay factor: 0b = 1x 1b = 10x (delay times are multiplied by 10x during power-down.) Note: DLYFCTR has no effect on power-up timing.
6-1	RESERVED	R	000 000b	
0	DLY9	R/W, E2	0b	Delay9 (occurs after Strobe 9 and before Strobe 10.) 0b = 2 ms 1b = 5 ms

Copyright © 2026 Texas Instruments Incorporated

7.26 SEQ3 Register (subaddress = 0x22)[reset = 0x98]

SEQ3 is shown in Figure 7-21 and described in Table 7-27.

Return to Summary Table.

Password protected.

Figure 7-21. SEQ3 Register

7	6	5	4	3	2	1	0
DC2_SEQ				DC1_SEQ			
R/W-9h				R/W-8h			

Table 7-27. SEQ3 Register Field Descriptions

Bit	Field	Type	Reset	Description
7-4	DC2_SEQ	R/W, E2	9h	DCDC2 enable STROBE: 0h = Rail is not controlled by sequencer. 1h = Rail is not controlled by sequencer. 2h = Rail is not controlled by sequencer. 3h = Enable at STROBE 3. 4h = Enable at STROBE 4. 5h = Enable at STROBE 5. 6h = Enable at STROBE 6. 7h = Enable at STROBE 7. 8h = Enable at STROBE 8. 9h = Enable at STROBE 9. Ah = Enable at STROBE 10. Bh = Rail is not controlled by sequencer. Ch = Rail is not controlled by sequencer. Dh = Rail is not controlled by sequencer. Eh = Rail is not controlled by sequencer. Fh = Rail is not controlled by sequencer.
3-0	DC1_SEQ	R/W, E2	8h	DCDC1 enable STROBE: 0h = Rail is not controlled by sequencer. 1h = Rail is not controlled by sequencer. 2h = Rail is not controlled by sequencer. 3h = Enable at STROBE 3. 4h = Enable at STROBE 4. 5h = Enable at STROBE 5. 6h = Enable at STROBE 6. 7h = Enable at STROBE 7. 8h = Enable at STROBE 8. 9h = Enable at STROBE 9. Ah = Enable at STROBE 10. Bh = Rail is not controlled by sequencer. Ch = Rail is not controlled by sequencer. Dh = Rail is not controlled by sequencer. Eh = Rail is not controlled by sequencer. Fh = Rail is not controlled by sequencer.

Copyright © 2026 Texas Instruments Incorporated

7.27 SEQ4 Register (subaddress = 0x23) [reset = 0x75]

SEQ4 is shown in Figure 7-22 and described in Table 7-28.

Return to Summary Table.

Password protected.

Figure 7-22. SEQ4 Register

7	6	5	4	3	2	1	0
DC4_SEQ				DC3_SEQ			
R/W-7h				R/W-5h			

Table 7-28. SEQ4 Register Field Descriptions

Bit	Field	Type	Reset	Description
7-4	DC4_SEQ	R/W, E2	7h	DCDC4 enable STROBE: 0h = Rail is not controlled by sequencer. 1h = Rail is not controlled by sequencer. 2h = Rail is not controlled by sequencer. 3h = Enable at STROBE 3. 4h = Enable at STROBE 4. 5h = Enable at STROBE 5. 6h = Enable at STROBE 6. 7h = Enable at STROBE 7. 8h = Enable at STROBE 8. 9h = Enable at STROBE 9. Ah = Enable at STROBE 10. Bh = Rail is not controlled by sequencer. Ch = Rail is not controlled by sequencer. Dh = Rail is not controlled by sequencer. Eh = Rail is not controlled by sequencer. Fh = Rail is not controlled by sequencer.
3-0	DC3_SEQ	R/W, E2	5h	DCDC3 enable STROBE: 0h = Rail is not controlled by sequencer. 1h = Rail is not controlled by sequencer. 2h = Rail is not controlled by sequencer. 3h = Enable at STROBE 3. 4h = Enable at STROBE 4. 5h = Enable at STROBE 5. 6h = Enable at STROBE 6. 7h = Enable at STROBE 7. 8h = Enable at STROBE 8. 9h = Enable at STROBE 9. Ah = Enable at STROBE 10. Bh = Rail is not controlled by sequencer. Ch = Rail is not controlled by sequencer. Dh = Rail is not controlled by sequencer. Eh = Rail is not controlled by sequencer. Fh = Rail is not controlled by sequencer.

Copyright © 2026 Texas Instruments Incorporated

7.28 SEQ5 Register (subaddress = 0x24) [reset = 0x12]

SEQ5 is shown in Figure 7-23 and described in Table 7-29.

Return to Summary Table.

Password protected.

Figure 7-23. SEQ5 Register

7	6	5	4	3	2	1	0
RESERVED		RESERVED		RESERVED		RESERVED	
R-0h		R/W-1h		R-0h		R/W-2h	

Table 7-29. SEQ5 Register Field Descriptions

Bit	Field	Type	Reset	Description
7-6	RESERVED	R	0h	
5-4	RESERVED	R/W, E2	1h	
3-2	RESERVED	R	0h	
1-0	RESERVED	R/W, E2	2h	

Copyright © 2026 Texas Instruments Incorporated

7.29 SEQ6 Register (subaddress = 0x25) [reset = 0x63]

SEQ6 is shown in Figure 7-24 and described in Table 7-30.

Return to Summary Table.

Password protected.

Figure 7-24. SEQ6 Register

7	6	5	4	3	2	1	0
Reserved				LDO1_SEQ			
R/W-6h				R/W-3h			

Table 7-30. SEQ6 Register Field Descriptions

Bit	Field	Type	Reset	Description
7-4	Reserved	R/W	6h	Reserved
3-0	LDO1_SEQ	R/W, E2	3h	LDO1 enable STROBE: 0h = Rail is not controlled by sequencer. 1h = Rail is not controlled by sequencer. 2h = Rail is not controlled by sequencer. 3h = Enable at STROBE 3. 4h = Enable at STROBE 4. 5h = Enable at STROBE 5. 6h = Enable at STROBE 6. 7h = Enable at STROBE 7. 8h = Enable at STROBE 8. 9h = Enable at STROBE 9. Ah = Enable at STROBE 10. Bh = Rail is not controlled by sequencer. Ch = Rail is not controlled by sequencer. Dh = Rail is not controlled by sequencer. Eh = Rail is not controlled by sequencer. Fh = Rail is not controlled by sequencer.

Copyright © 2026 Texas Instruments Incorporated

7.30 SEQ7 Register (subaddress = 0x26) [reset = 0x03]

SEQ7 is shown in Figure 7-25 and described in Table 7-31.

Return to Summary Table.

Password protected.

Figure 7-25. SEQ7 Register

7	6	5	4	3	2	1	0
GPO2_SEQ				GPO1_SEQ			
R/W-0h				R/W-3h			

Table 7-31. SEQ7 Register Field Descriptions

Bit	Field	Type	Reset	Description
7-4	GPO2_SEQ	R/W, E2	0h	GPO2 enable STROBE: 0h = Rail is not controlled by sequencer. 1h = Rail is not controlled by sequencer. 2h = Rail is not controlled by sequencer. 3h = Enable at STROBE 3. 4h = Enable at STROBE 4. 5h = Enable at STROBE 5. 6h = Enable at STROBE 6. 7h = Enable at STROBE 7. 8h = Enable at STROBE 8. 9h = Enable at STROBE 9. Ah = Enable at STROBE 10. Bh = Rail is not controlled by sequencer. Ch = Rail is not controlled by sequencer. Dh = Rail is not controlled by sequencer. Eh = Rail is not controlled by sequencer. Fh = Rail is not controlled by sequencer.
3-0	GPO1_SEQ	R/W, E2	3h	GPO1 enable STROBE: 0h = Rail is not controlled by sequencer. 1h = Rail is not controlled by sequencer. 2h = Rail is not controlled by sequencer. 3h = Enable at STROBE 3. 4h = Enable at STROBE 4. 5h = Enable at STROBE 5. 6h = Enable at STROBE 6. 7h = Enable at STROBE 7. 8h = Enable at STROBE 8. 9h = Enable at STROBE 9. Ah = Enable at STROBE 10. Bh = Rail is not controlled by sequencer. Ch = Rail is not controlled by sequencer. Dh = Rail is not controlled by sequencer. Eh = Rail is not controlled by sequencer. Fh = Rail is not controlled by sequencer.

Copyright © 2026 Texas Instruments Incorporated

8 Application and Implementation

Note

Information in the following applications sections is not part of the TI component specification, and TI does not warrant its accuracy or completeness. TI's customers are responsible for determining suitability of components for their purposes, as well as validating and testing their design implementation to confirm system functionality.

8.1 Application Information

The TPS65216 is designed to pair with various applications. For detailed information on using TPS65216 with Sitara™ AMIC110, AMIC120, AM335x or AM437x processors, refer to *Powering AMIC110, AMIC120, AM335x, and AM437x with TPS65216*. The typical application in Typical Application is based on and uses terminology consistent with the Sitara™ family of processors.

8.2 Typical Application

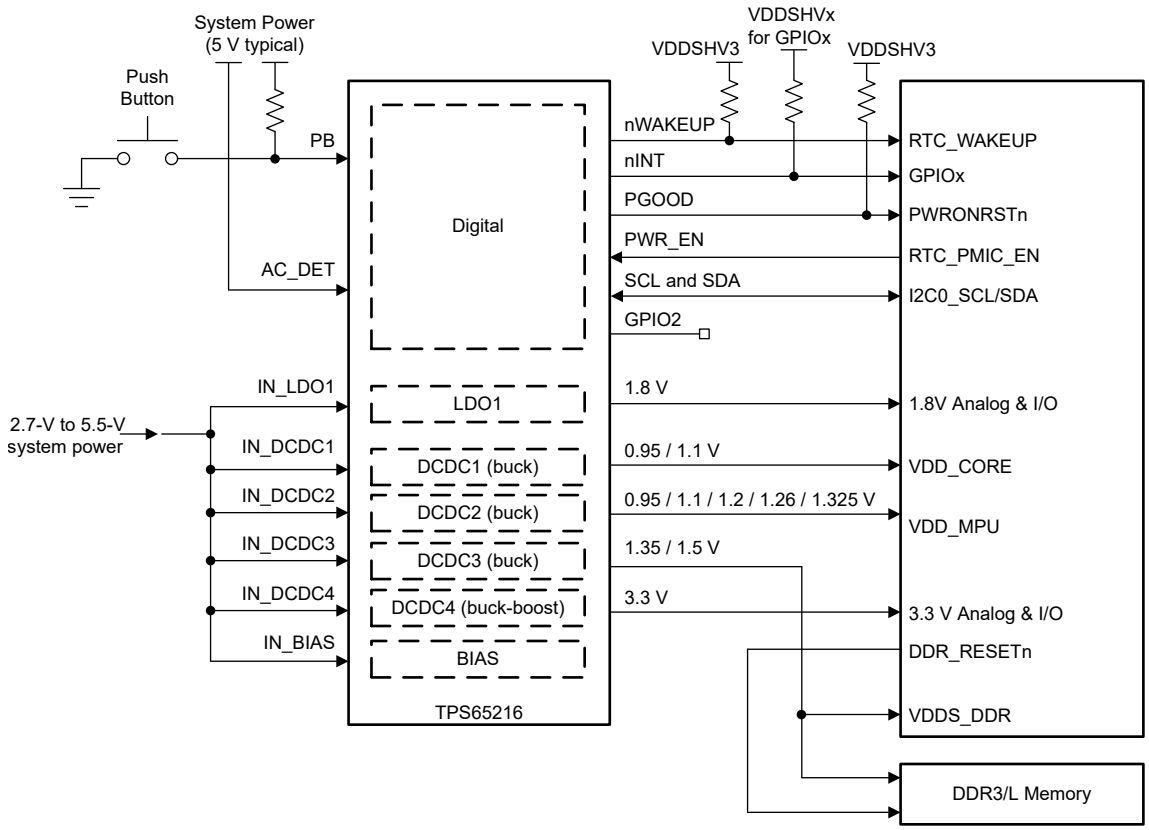

Figure 8-1. Typical Application Schematic

8.2.1 Design Requirements

Table 8-1 lists the design requirements.

Table 8-1. Design Parameters

	VOLTAGE	SEQUENCE
DCDC1	1.1 V	8
DCDC2	1.1 V	9
DCDC3	1.2 V	5
DCDC4	3.3 V	7
LDO1	1.8 V	3

8.2.2 Detailed Design Procedure

8.2.2.1 Output Filter Design

The step down converters (DCDC1, DCDC2, and DCDC3) on TPS65216 are designed to operate with effective inductance values in the range of 1 to 2.2 µH and with effective output capacitance in the range of 10 to 100 µF. The internal compensation is optimized to operate with an output filter of L = 1.5 µH and C_{OUT} = 10 µF.

The buck boost converter (DCDC4) on TPS65216 is designed to operate with effective inductance values in the range of 1.2 to 2.2 µH. The internal compensation is optimized to operate with an output filter of L = 1.5 µH and C_{OUT} = 47 µF.

Larger or smaller inductor/capacitance values can be used to optimize performance of the device for specific operation conditions.

8.2.2.2 Inductor Selection for Buck Converters

The inductor value affects its peak to peak ripple current, the PWM to PFM transition point, the output voltage ripple, and the efficiency. The selected inductor must be rated for its DC resistance and saturation current. The inductor ripple current (ΔL) decreases with higher inductance and increases with higher V_{IN} or V_{OUT}. Equation 1 calculates the maximum inductor current ripple under static load conditions. The saturation current of the inductor should be rated higher than the maximum inductor current as calculated with Equation 2. This is recommended as during heavy load transient the inductor current will rise above the calculated value.

$$\Delta I_L = V_{OUT} \times \frac{1 - \frac{V_{OUT}}{V_{IN}}}{L \times f} \quad (1)$$

$$I_{Lmax} = I_{OUTmax} + \frac{\Delta I_L}{2} \quad (2)$$

where

- F = Switching frequency
- L = Inductor value
- ΔI_L = Peak-to-peak inductor ripple current
- I_{Lmax} = Maximum inductor current

The following inductors have been used with the TPS65216 (see Table 8-2).

Table 8-2. List of Recommended Inductors

PART NUMBER	VALUE	SIZE (mm) [L × W × H]	MANUFACTURER
INDUCTORS FOR DCDC1, DCDC2, DCDC3, DCDC4			
SPM3012T-1R5M	1.5 µH, 2.8 A, 77 mΩ	3.2 × 3.0 × 1.2	TDK
IHLP1212BZER1R5M11	1.5 µH, 4.0 A, 28.5 mΩ	3.6 × 3.0 × 2.0	Vishay

Copyright © 2026 Texas Instruments Incorporated

8.2.2.3 Output Capacitor Selection

The hysteretic PWM control scheme of the TPS65216 switching converters allows the use of tiny ceramic capacitors. Ceramic capacitors with low ESR values have the lowest output voltage ripple and are recommended. The output capacitor requires either an X7R or X5R dielectric.

At light load currents the converter operates in power save mode, and the output voltage ripple is dependent on the output capacitor value and the PFM peak inductor current. Higher output capacitor values minimize the voltage ripple in PFM Mode and tighten DC output accuracy in PFM mode.

The buck-boost converter requires additional output capacitance to help maintain converter stability during high load conditions. At least 40 µF of output capacitance is recommended and an additional 100-nF capacitor can be added to further filter output ripple at higher frequencies.

Table 8-2 lists the recommended capacitors.

Table 8-3. List of Recommended Capacitors

PART NUMBER	VALUE	SIZE (mm) [L × W × H]	MANUFACTURER
CAPACITORS FOR VOLTAGES UP TO 5.5 V(1)			
GRM188R60J105K	1 µF	1608 / 0603 (1.6 × 0.8 × 0.8)	Murata
GRM21BR60J475K	4.7 µF	2012 / 0805 (2.0 × 1.25 × 1.25)	Murata
GRM31MR60J106K	10 µF	3216 / 1206 (3.2 × 1.6 × 1.6)	Murata
GRM31CR60J226K	22 µF	3216 / 1206 (3.2 × 1.6 × 1.6)	Murata

(1) The DC bias effect of ceramic capacitors must be considered when selecting a capacitor.

8.2.3 Application Curves

at T_J = 25°C unless otherwise noted

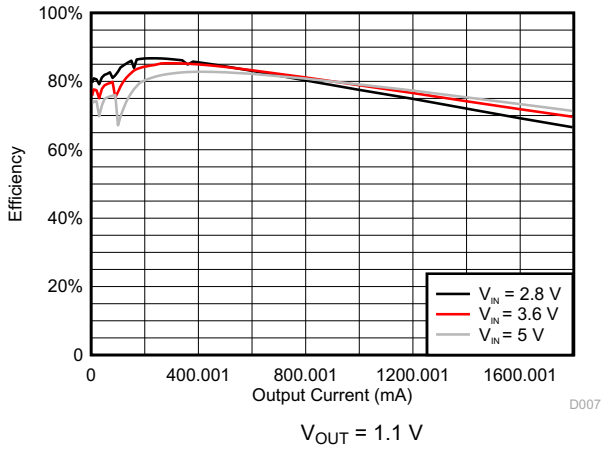

V_{OUT} = 1.1 V

Figure 8-2. DCDC1/DCDC2 Efficiency

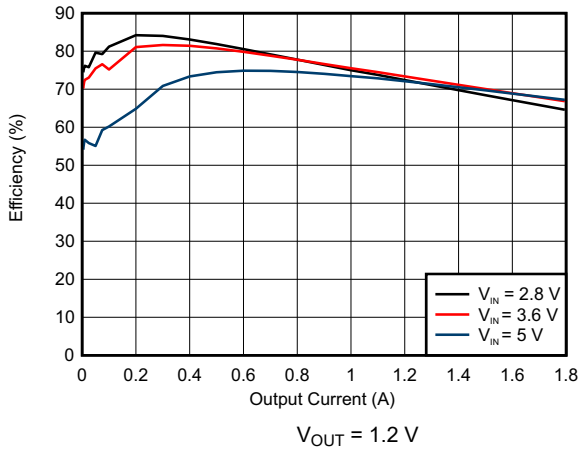

V_{OUT} = 1.2 V

Figure 8-3. DCDC3 Efficiency

Copyright © 2026 Texas Instruments Incorporated

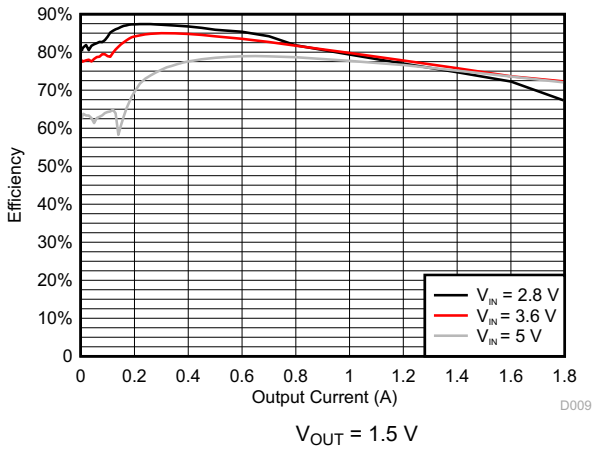

Figure 8-4. DCDC3 Efficiency

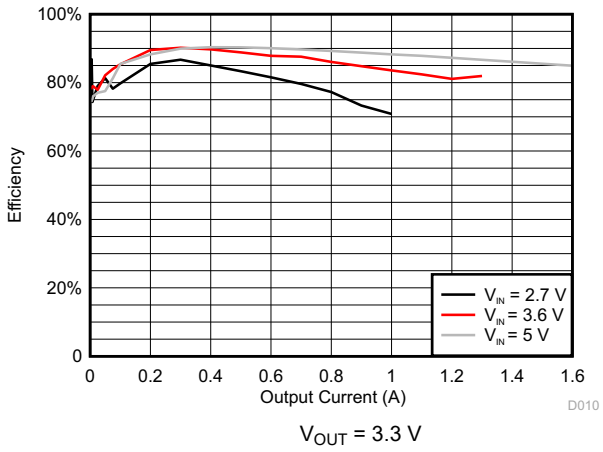

Figure 8-5. DCDC4 Efficiency

8.3 Power Supply Recommendations

The device is designed to operate with an input voltage supply range between 3.6 V and 5.5 V. This input supply can be from an externally regulated supply. If the input supply is located more than a few inches from the TPS65216 additional bulk capacitance may be required in addition to the ceramic bypass capacitors. An electrolytic capacitor with a value of 47 µF is a typical choice.

8.4 Layout

8.4.1 Layout Guidelines

Follow these layout guidelines:

- The IN_X pins should be bypassed to ground with a low ESR ceramic bypass capacitor. The typical recommended bypass capacitance is 4.7-µF with a X5R or X7R dielectric.
- The optimum placement is closest to the IN_X pins of the device. Take care to minimize the loop area formed by the bypass capacitor connection, the IN_X pin, and the thermal pad of the device.
- The thermal pad should be tied to the PCB ground plane with a minimum of 25 vias. See Figure 8-7 for an example.
- The LX trace should be kept on the PCB top layer and free of any vias.
- The FBX traces should be routed away from any potential noise source to avoid coupling.
- DCDC4 Output capacitance should be placed immediately at the DCDC4 pin. Excessive distance between the capacitance and DCDC4 pin may cause poor converter performance.

Copyright © 2026 Texas Instruments Incorporated

8.4.2 Layout Example

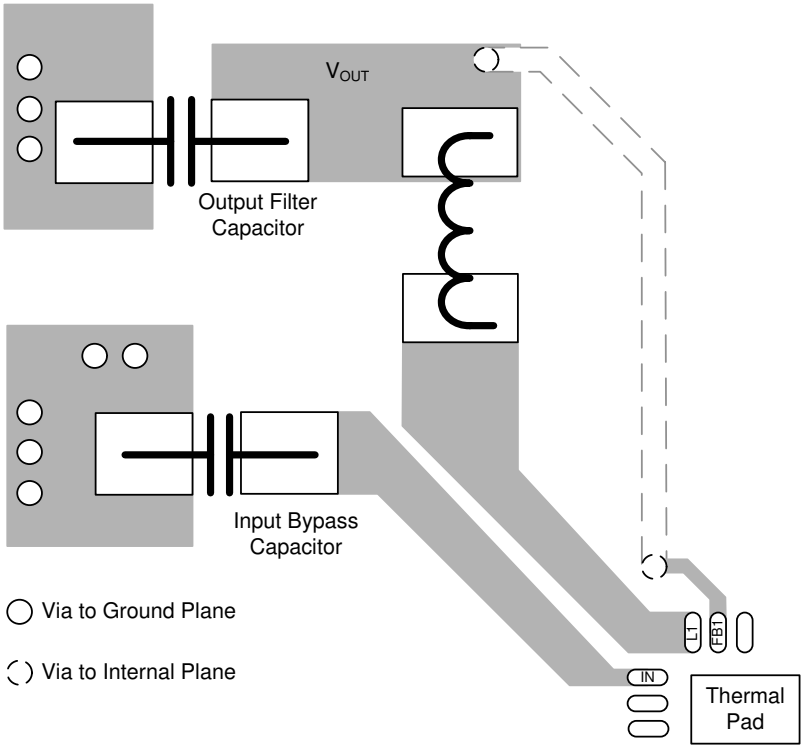

Figure 8-6. Layout Recommendation

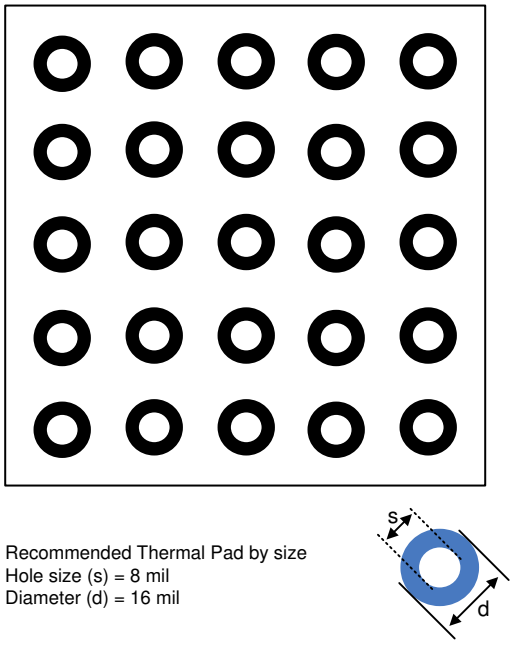

Figure 8-7. Thermal Pad Layout Recommendation

9 Device and Documentation Support

9.1 Device Support

9.1.1 Third-Party Products Disclaimer

TI'S PUBLICATION OF INFORMATION REGARDING THIRD-PARTY PRODUCTS OR SERVICES DOES NOT CONSTITUTE AN ENDORSEMENT REGARDING THE SUITABILITY OF SUCH PRODUCTS OR SERVICES OR A WARRANTY, REPRESENTATION OR ENDORSEMENT OF SUCH PRODUCTS OR SERVICES, EITHER ALONE OR IN COMBINATION WITH ANY TI PRODUCT OR SERVICE.

9.2 Documentation Support

9.2.1 Related Documentation

For related documentation see the following:

- Texas Instruments, *Basic Calculation of a Buck Converter's Power Stage* application report
- Texas Instruments, *Design Calculations for Buck-Boost Converters* application report
- Texas Instruments, *Empowering Designs With Power Management IC (PMIC) for Processor Applications* application report
- Texas Instruments, *TPS65218EVM* user's guide
- Texas Instruments, *TPS65218 Power Management Integrated Circuit (PMIC) for Industrial Applications* application report

9.3 Receiving Notification of Documentation Updates

To receive notification of documentation updates, navigate to the device product folder on ti.com. In the upper right corner, click on *Alert me* to register and receive a weekly digest of any product information that has changed. For change details, review the revision history included in any revised document.

9.4 Support Resources

TI E2E™ support forums are an engineer's go-to source for fast, verified answers and design help — straight from the experts. Search existing answers or ask your own question to get the quick design help you need.

Linked content is provided "AS IS" by the respective contributors. They do not constitute TI specifications and do not necessarily reflect TI's views; see TI's Terms of Use.

9.5 Trademarks

Sitara™ and TI E2E™ are trademarks of Texas Instruments.
All trademarks are the property of their respective owners.

9.6 Electrostatic Discharge Caution



This integrated circuit can be damaged by ESD. Texas Instruments recommends that all integrated circuits be handled with appropriate precautions. Failure to observe proper handling and installation procedures can cause damage.

ESD damage can range from subtle performance degradation to complete device failure. Precision integrated circuits may be more susceptible to damage because very small parametric changes could cause the device not to meet its published specifications.

9.7 Glossary

TI Glossary	This glossary lists and explains terms, acronyms, and definitions.

Copyright © 2026 Texas Instruments Incorporated

10 Revision History

NOTE: Page numbers for previous revisions may differ from page numbers in the current version.

Changes from Revision B (January 2026) to Revision C (June 2026) **Page**

- Changed VIN range minimum from 3.6 V to 2.7 V for DCDC1-4 1
- Changed minimum from 3.6 V to 2.7 V for IN_BIAS and Input voltage for DCDC1, DCDC2, DCDC3, and DCDC4 7
- Changed minimum from 3.6 V to 2.7 V for V_{IN_BIAS} , V_{IN_DCDC1}, V_{IN_DCDC2}, V_{IN_DCDC3}, and V_{IN_DCDC4} 8
- Changed references to system power minimum 3.6 V to 2.7 V in the *Functional Block Diagram* 18
- Changed 3.6-V to 2.7-V for minimum system power voltage in *Typical Application* Figure 77

Changes from Revision A (December 2019) to Revision B (January 2026) **Page**

- Updated the numbering format for tables, figures, and cross-references throughout the document 1
- Updated wording of "sleep" mode to "SUSPEND" mode for behavior of DCDC3 in *Description* section 1
- Deleted broken links from PASSWORD register field description 39
- Updated GPIO2 bitfield description in ENABLE2 from General purpose output 3 to 2 39
- Changed the device marking from TPS65216D0 to T65216D0 in the *Packaging Information* 84

Changes from Revision * (October 2018) to Revision A (December 2019) **Page**

- Updated *Title* and *Description* section 1

11 Mechanical, Packaging, and Orderable Information

The following pages include mechanical packaging and orderable information. This information is the most current data available for the designated devices. This data is subject to change without notice and revision of this document. For browser-based versions of this data sheet, refer to the left-hand navigation.

Copyright © 2026 Texas Instruments Incorporated

11.1 Package Option Addendum

11.1.1 Packaging Information

Orderable Device	Status (1)	Package Type	Package Drawing	Pins	Package Qty	Eco Plan (2)	Lead/Ball Finish(3)	MSL Peak Temp (4)	Op Temp (°C)	Device Marking(5) (6)
TPS65216D0RSLR	ACTIVE	VQFN	RSL	48	2500	Green (RoHS & no Sb/Br)	CU NIPDAU	Level-3-260C-168 HR	-40 to 105	T65216D0
TPS65216D0RSLT	ACTIVE	VQFN	RSL	48	250	Green (RoHS & no Sb/Br)	CU NIPDAU	Level-3-260C-168 HR	-40 to 105	T65216D0

(1) The marketing status values are defined as follows:
ACTIVE: Product device recommended for new designs.
LIFEBUY: TI has announced that the device will be discontinued, and a lifetime-buy period is in effect.
NRND: Not recommended for new designs. Device is in production to support existing customers, but TI does not recommend using this part in a new design.
PRE_PROD Unannounced device, not in production, not available for mass market, nor on the web, samples not available.
PREVIEW: Device has been announced but is not in production. Samples may or may not be available.
OBSOLETE: TI has discontinued the production of the device.

(2) Eco Plan - The planned eco-friendly classification: Pb-Free (RoHS), Pb-Free (RoHS Exempt), or Green (RoHS & no Sb/Br) - please check http://www.ti.com/productcontent for the latest availability information and additional product content details.
TBD: The Pb-Free/Green conversion plan has not been defined.
Pb-Free (RoHS): TI's terms "Lead-Free" or "Pb-Free" mean semiconductor products that are compatible with the current RoHS requirements for all 6 substances, including the requirement that lead not exceed 0.1% by weight in homogeneous materials. Where designed to be soldered at high temperatures, TI Pb-Free products are suitable for use in specified lead-free processes.
Pb-Free (RoHS Exempt): This component has a RoHS exemption for either 1) lead-based flip-chip solder bumps used between the die and package, or 2) lead-based die adhesive used between the die and leadframe. The component is otherwise considered Pb-Free (RoHS compatible) as defined above.
Green (RoHS & no Sb/Br): TI defines "Green" to mean Pb-Free (RoHS compatible), and free of Bromine (Br) and Antimony (Sb) based flame retardants (Br or Sb do not exceed 0.1% by weight in homogeneous material)

(3) Lead/Ball Finish - Orderable Devices may have multiple material finish options. Finish options are separated by a vertical ruled line. Lead/Ball Finish values may wrap to two lines if the finish value exceeds the maximum column width.

(4) MSL, Peak Temp. -- The Moisture Sensitivity Level rating according to the JEDEC industry standard classifications, and peak solder temperature.

(5) There may be additional marking, which relates to the logo, the lot trace code information, or the environmental category on the device

(6) Multiple Device markings will be inside parentheses. Only on Device Marking contained in parentheses and separated by a "~" will appear on a device. If a line is indented then it is a continuation of the previous line and the two combined represent the entire Device Marking for that device.

Important Information and Disclaimer: The information provided on this page represents TI's knowledge and belief as of the date that it is provided. TI bases its knowledge and belief on information provided by third parties, and makes no representation or warranty as to the accuracy of such information. Efforts are underway to better integrate information from third parties. TI has taken and continues to take reasonable steps to provide representative and accurate information but may not have conducted destructive testing or chemical analysis on incoming materials and chemicals. TI and TI suppliers consider certain information to be proprietary, and thus CAS numbers and other limited information may not be available for release.

In no event shall TI's liability arising out of such information exceed the total purchase price of the TI part(s) at issue in this document sold by TI to Customer on an annual basis.

Copyright © 2026 Texas Instruments Incorporated

11.1.2 Tape and Reel Information

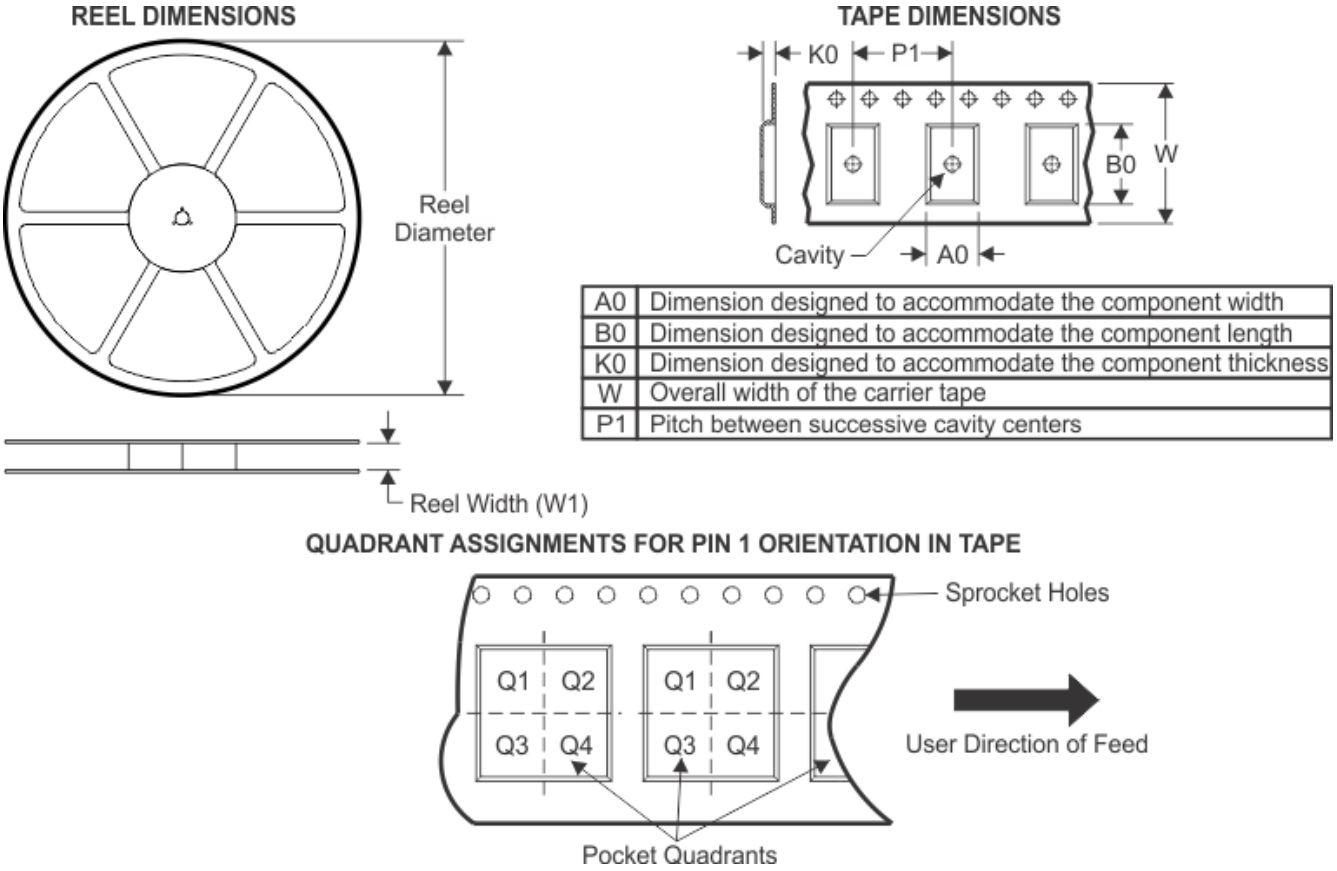

A0	Dimension designed to accommodate the component width
B0	Dimension designed to accommodate the component length
K0	Dimension designed to accommodate the component thickness
W	Overall width of the carrier tape
P1	Pitch between successive cavity centers

Device	Package Type	Package Drawing	Pins	SPQ	Reel Diameter (mm)	Reel Width W1 (mm)	A0 (mm)	B0 (mm)	K0 (mm)	P1 (mm)	W (mm)	Pin1 Quadrant
TPS65216D0RSLR	VQFN	RSL	48	2500	330.0	16.4	6.3	6.3	1.1	12.0	16.0	Q2
TPS65216D0RSLT	VQFN	RSL	48	250	180.0	16.4	6.3	6.3	1.1	12.0	16.0	Q2

Copyright © 2026 Texas Instruments Incorporated

TAPE AND REEL BOX DIMENSIONS

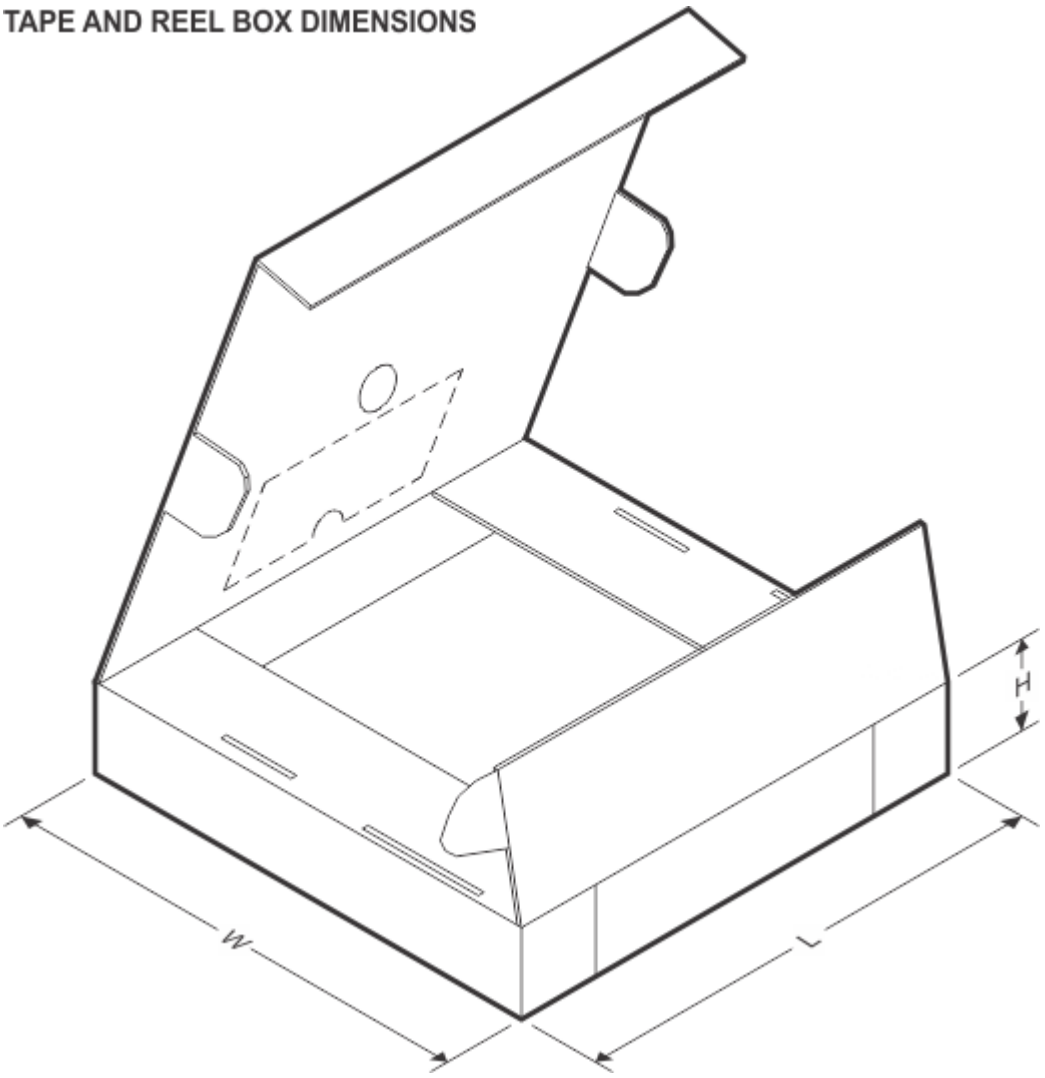

Device	Package Type	Package Drawing	Pins	SPQ	Length (mm)	Width (mm)	Height (mm)
TPS65216D0RSLR	VQFN	RSL	48	2500	367.0	367.0	38.0
TPS65216D0RSLT	VQFN	RSL	48	250	210.0	185.0	35.0

Copyright © 2026 Texas Instruments Incorporated

GENERIC PACKAGE VIEW

RSL 48

VQFN - 1 mm max height

6 x 6, 0.4 mm pitch

QUAD FLATPACK - NO LEAD

This image is a representation of the package family, actual package may vary.
Refer to the product data sheet for package details.

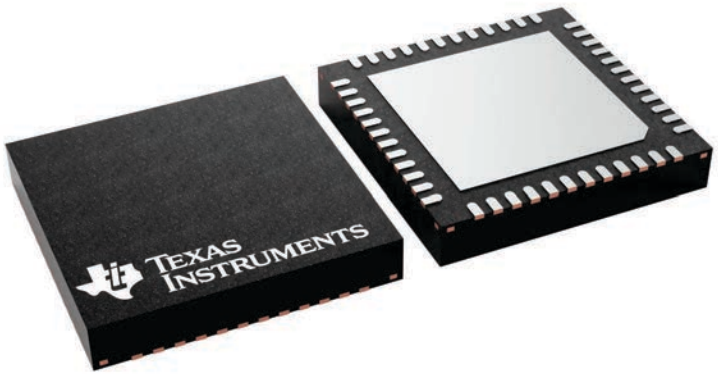

4225749/A

RSL0048G

PACKAGE OUTLINE

VQFN - 1 mm max height

PLASTIC QUAD FLATPACK - NO LEAD

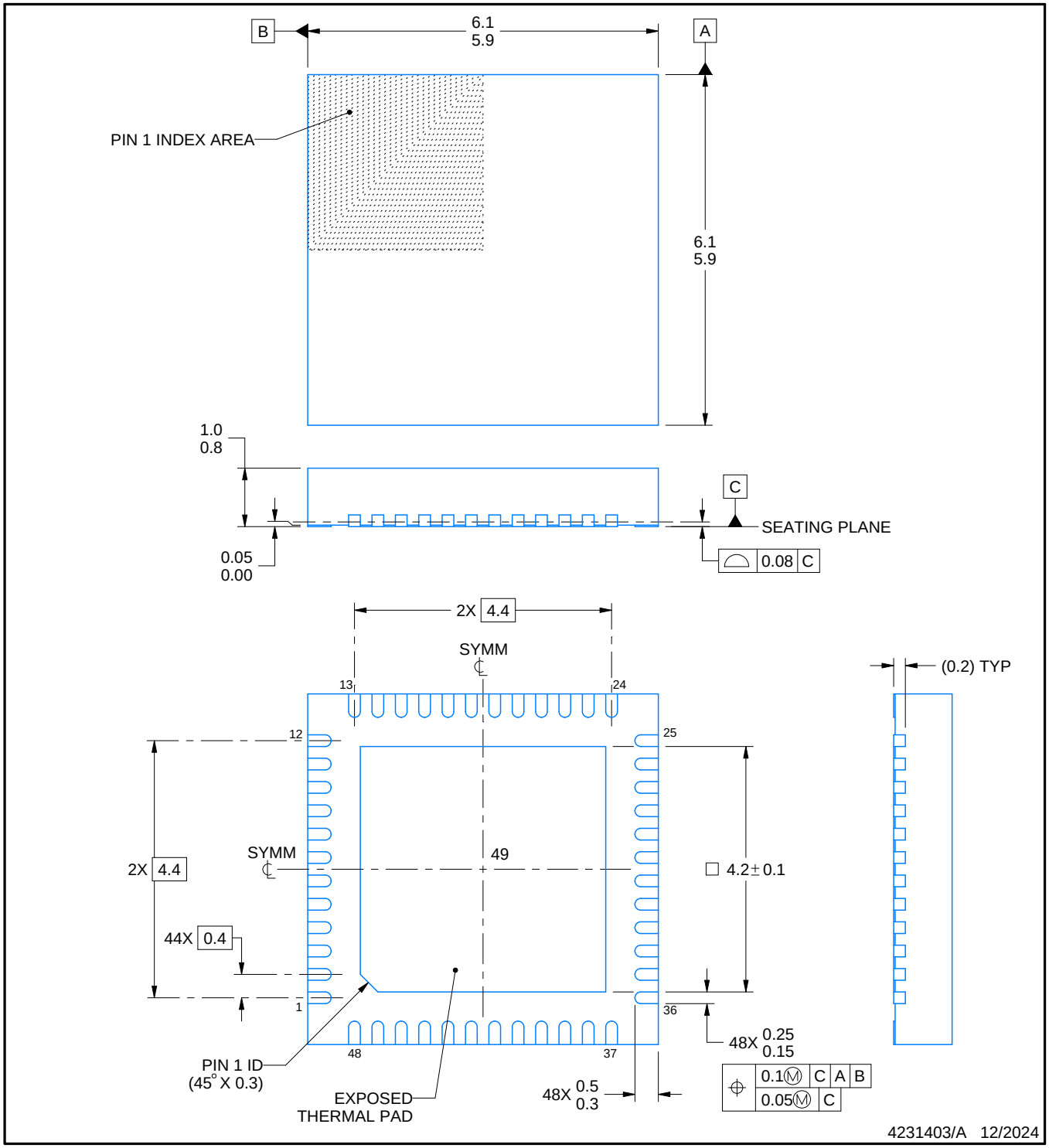

NOTES:

1. All linear dimensions are in millimeters. Any dimensions in parenthesis are for reference only. Dimensioning and tolerancing per ASME Y14.5M.
2. This drawing is subject to change without notice.
3. The package thermal pad must be soldered to the printed circuit board for thermal and mechanical performance.

EXAMPLE BOARD LAYOUT

RSL0048G

VQFN - 1 mm max height

PLASTIC QUAD FLATPACK - NO LEAD

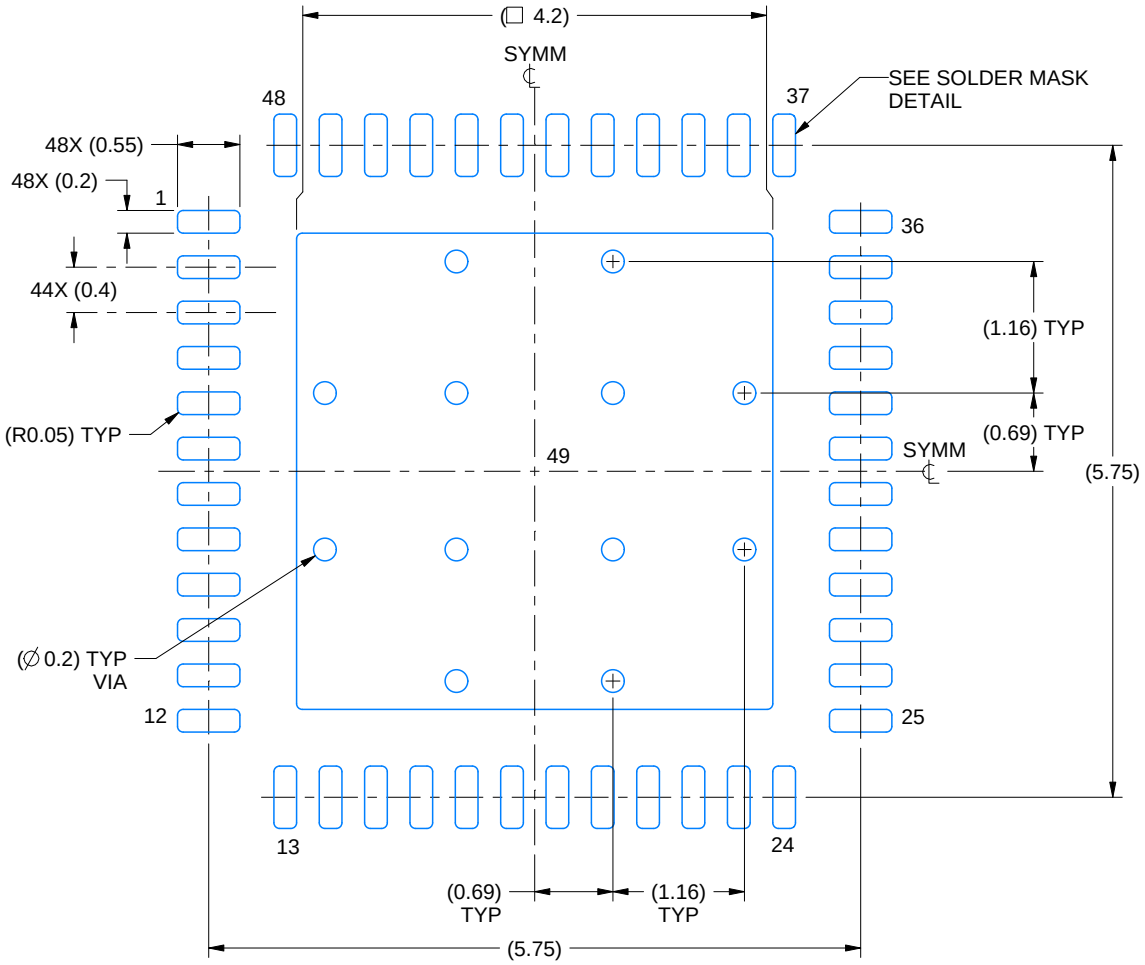

LAND PATTERN EXAMPLE
EXPOSED METAL SHOWN
SCALE: 15X

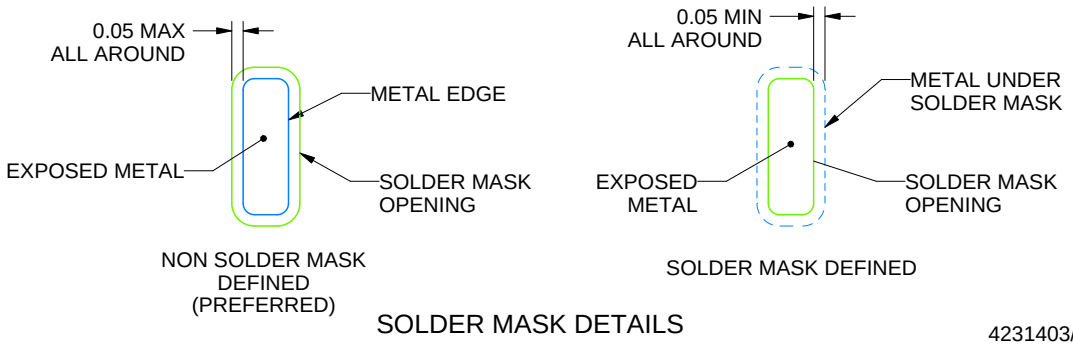

SOLDER MASK DETAILS

4231403/A 12/2024

NOTES: (continued)

4. This package is designed to be soldered to a thermal pad on the board. For more information, see Texas Instruments literature number SLUA271 (www.ti.com/lit/slua271).
5. Vias are optional depending on application, refer to device data sheet. If any vias are implemented, refer to their locations shown on this view. It is recommended that vias under paste be filled, plugged or tented.

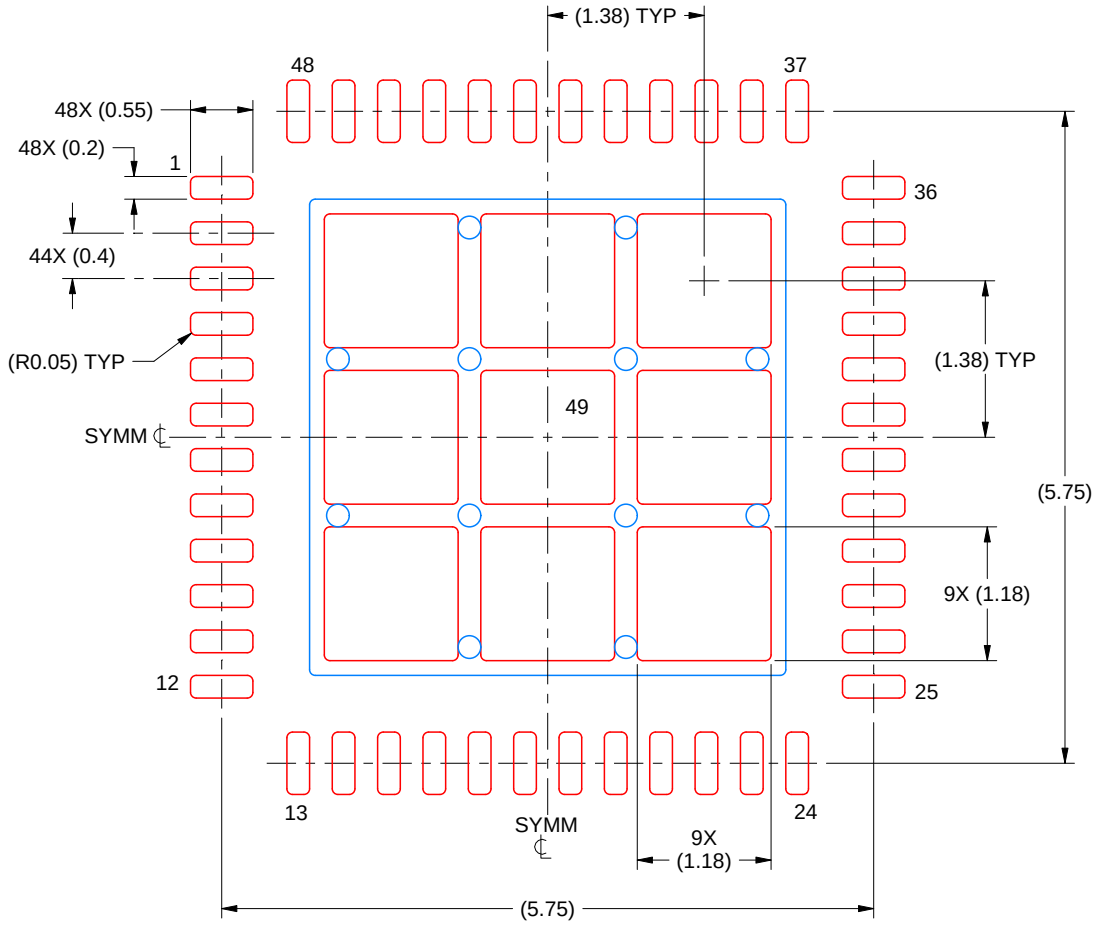

SOLDER PASTE EXAMPLE
BASED ON 0.1 MM THICK STENCIL
SCALE: 15X

EXPOSED PAD 49
71% PRINTED SOLDER COVERAGE BY AREA UNDER PACKAGE

4231403/A 12/2024

NOTES: (continued)

6. Laser cutting apertures with trapezoidal walls and rounded corners may offer better paste release. IPC-7525 may have alternate design recommendations.

IMPORTANT NOTICE AND DISCLAIMER

TI PROVIDES TECHNICAL AND RELIABILITY DATA (INCLUDING DATASHEETS), DESIGN RESOURCES (INCLUDING REFERENCE DESIGNS), APPLICATION OR OTHER DESIGN ADVICE, WEB TOOLS, SAFETY INFORMATION, AND OTHER RESOURCES “AS IS” AND WITH ALL FAULTS, AND DISCLAIMS ALL WARRANTIES, EXPRESS AND IMPLIED, INCLUDING WITHOUT LIMITATION ANY IMPLIED WARRANTIES OF MERCHANTABILITY, FITNESS FOR A PARTICULAR PURPOSE OR NON-INFRINGEMENT OF THIRD PARTY INTELLECTUAL PROPERTY RIGHTS.

These resources are intended for skilled developers designing with TI products. You are solely responsible for (1) selecting the appropriate TI products for your application, (2) designing, validating and testing your application, and (3) ensuring your application meets applicable standards, and any other safety, security, regulatory or other requirements.

These resources are subject to change without notice. TI grants you permission to use these resources only for development of an application that uses the TI products described in the resource. Other reproduction and display of these resources is prohibited. No license is granted to any other TI intellectual property right or to any third party intellectual property right. TI disclaims responsibility for, and you fully indemnify TI and its representatives against any claims, damages, costs, losses, and liabilities arising out of your use of these resources.

TI’s products are provided subject to TI’s Terms of Sale, TI’s General Quality Guidelines, or other applicable terms available either on ti.com or provided in conjunction with such TI products. TI’s provision of these resources does not expand or otherwise alter TI’s applicable warranties or warranty disclaimers for TI products. Unless TI explicitly designates a product as custom or customer-specified, TI products are standard, catalog, general purpose devices.

TI objects to and rejects any additional or different terms you may propose.

Copyright © 2026, Texas Instruments Incorporated

Last updated 10/2025