具有 I²C 接口的 TPS65235 LNB 电压稳压器

1 特性

- 用于 LNB 和 I²C 接口的完整集成解决方案
- 兼容 DiSEqC 2.x 和 DiSEqC 1.x
- 支持 5V、12V 和 15V 电源轨
- 高达 1000mA 的外部电阻器可调精确输出电流限制
- 升压开关峰值电流限制，与 LDO 电流限制成正比
- 具有 140mΩ 低 $R_{ds(on)}$ 内部电源开关的升压转换器
- 可选择 1MHz 或 500kHz 升压开关频率
- 适用于非 I²C 应用的专用使能引脚
- 具有推挽式输出级的低压降 (LDO) 稳压器，用于提供 VLNB 输出
- 内置精确的 22kHz 音调发生器并支持外部音调输入
- 支持 44kHz 和 22kHz 外部音调输入
- 可调节软启动和 13V 至 18V 电压转换时间
- 650mV 至 750mV 的 22kHz 音调振幅选择
- 通过在 EN 为低电平时进行访问的 I²C 寄存器
- 短路动态保护
- 输出电压电平、DiSEqC 音调输入和输出、电流电平以及电缆连接诊断
- 具有过热保护功能
- 20 引脚 WQFN 3mm x 3mm (RUK) 封装

2 应用

- 机顶盒卫星接收器
- 电视卫星接收器
- PC 卡卫星接收器
- 卫星电视

3 说明

TPS65235 专为模拟和数字卫星接收器而设计，是一款具有 I²C 接口的单片稳压器。该器件专用于向碟形天线中的 LNB 降压转换器或多开关箱提供 13V 至 18V 电源以及 22kHz 音调信号。该器件提供了一套完整的解决方案，具有元件数极少、功率耗散低、设计简单以及采用 I²C 标准接口等优点。

TPS65235 具有高功效。该升压转换器集成了一个在 1MHz 或 500kHz 可选开关频率下运行的 140mΩ 功率 MOSFET。线性稳压器中的压降为 0.8V，能够更大限度地降低功率损耗。TPS65235 提供了多种生成 22kHz 信号的方法。具有推挽式输出级的集成线性稳压器可生成 22kHz 音调信号（在输出端叠加），即使在零负载条件下也是如此。可由外部电阻器以 ±10% 的精度来设定线性稳压器的电流限值。通过 I²C 读取的全范围诊断可用于系统监控。

TPS65235 支持面向 22kHz 音调检测电路和输出接口的高级 DiSEqC 2.x 标准。

器件信息(1)

器件型号	封装	封装尺寸（标称值）
TPS65235	WQFN	3.00mm x 3.00mm

(1) 如需了解所有可用封装，请参阅数据表末尾的可订购产品附录。

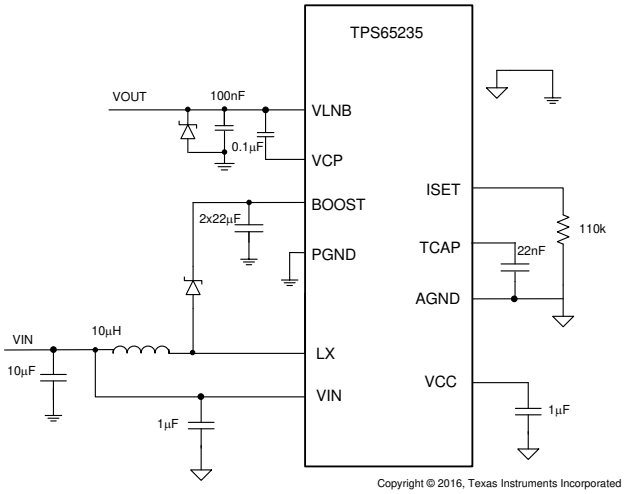

简化版原理图

本文档旨在为方便起见，提供有关 TI 产品中文版本的信息，以确认产品的概要。有关适用的官方英文版本的最新信息，请访问 www.ti.com，其内容始终优先。TI 不保证翻译的准确性和有效性。在实际设计之前，请务必参考最新版本的英文版本。

Table of Contents

1 特性 1
2 应用 1
3 说明 1
4 Revision History 2
5 Pin Configuration and Functions 3
6 Specifications 4
6.1 Absolute Maximum Ratings 4
6.2 ESD Ratings 4
6.3 Recommended Operating Conditions 4
6.4 Thermal Information 4
6.5 Electrical Characteristics 5
6.6 Timing Requirements 6
6.7 Typical Characteristics 7
7 Detailed Description 8
7.1 Overview 8
7.2 Functional Block Diagram 8
7.3 Feature Description 8
7.4 Device Functional Modes 17
7.5 Programming 18
7.6 Register Maps 20
8 Application and Implementation 23
8.1 Application Information 23
8.2 Typical Application for DiSEqc1.x Support 23
9 Power Supply Recommendations 29
10 Layout 30
10.1 Layout Guidelines 30
10.2 Layout Example 30
11 Device and Documentation Support 31
11.1 接收文档更新通知 31
11.2 支持资源 31
11.3 Trademarks 31
11.4 Electrostatic Discharge Caution 31
11.5 Glossary 31
12 Mechanical, Packaging, and Orderable Information 31

4 Revision History

Changes from Revision C (July 2019) to Revision D (May 2021) **Page**

- 更新了整个文档中的表格、图和交叉参考的编号格式。 1
- Changed $V_{(drop)}$ min and max values 5
- Changed $I_{(rev_dis)}$ min and max values 5

Changes from Revision B (July 2018) to Revision C (July 2019) **Page**

- Changed $V_{(drop)}$ at TONEAMP = 0b From: MIN = 0.59 TYP = 0.8 MAX = 1 To: MIN = 0.49 TYP = 0.8 MAX = 1.1 in the *Electrical Characteristics* 5
- Changed $V_{(drop)}$ at TONEAMP = 1b From: MIN = 0.71 TYP = 0.9 MAX = 1.12 To: MIN = 0.65 TYP = 0.9 MAX = 1.2 in the *Electrical Characteristics* 5

Changes from Revision A (December 2017) to Revision B (December 2017) **Page**

- Changed the GDR TONE_TRANS = 1b value From: MAX = 24.03V To: MAX = 24.33V in the *Electrical Characteristics* 5

Changes from Revision * (January 2017) to Revision A (December 2017) **Page**

- Changed the VCP values From: VLNB to 7 V To: – 0.3 V to 7 V in the *Absolute Maximum Ratings* 4
- Changed the GDR values From: VLNB to VCP To: – 0.3 V to 7 V in the *Absolute Maximum Ratings* 4
- Changed the Operating junction temperature From: 125°C To: 150°C in the *Absolute Maximum Ratings* 4
- Changed V_{IN} MAX value From: 16 V To: 20 V in *Recommended Operating Conditions* 4
- Changed V_{IN} MAX value From: 16 V To: 20 V in *Electrical Characteristics* 5
- Changed 4.7 µF To: 4 µF in the line callouts of 图 7-6 13
- Changed 4 µF To: 5 µF in the graph legends of 图 7-7 13
- Changed the description of bit 1 TONE_AUTO From: "controlled by TONE_RECEIVE" To: "controlled by TONE_TRANS" in 表 7-7 21

Copyright © 2021 Texas Instruments Incorporated

5 Pin Configuration and Functions

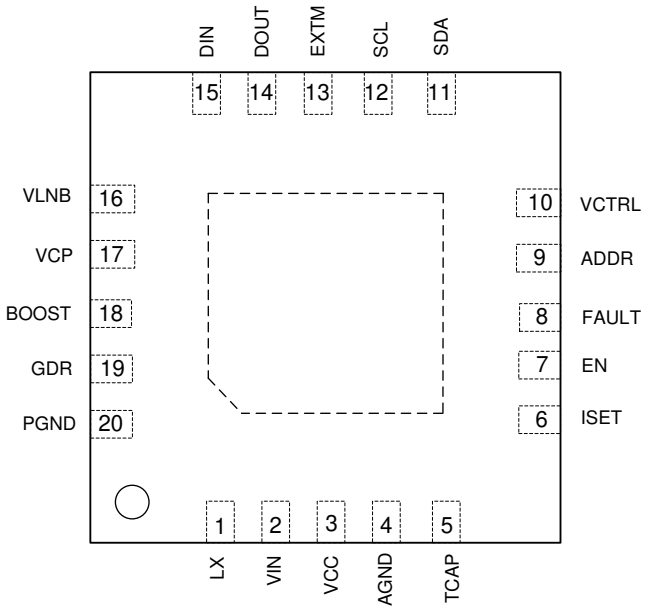

图 5-1. 20 Pin (WQFN-20) RUK Package (Top View)

表 5-1. Pin Functions

PIN		I/O(1)	DESCRIPTION
NAME	NO.		
LX	1	I	Switching node of the boost converter
VIN	2	S	Input of internal linear regulator
VCC	3	O	Internal 6.3-V power supply. Connect a 1-μF ceramic capacitor from this pin to ground. When V_{IN} is 5 V, connect VCC to VIN.
AGND	4	S	Analog ground. Connect all ground pins and power pad together.
TCAP	5	O	Connect a capacitor to this pin to set the rise time of the LNB output.
ISET	6	O	Connect a resistor to this pin to set the LNB output current limit.
EN	7	I	Enable pin to enable the VLNB output; pull to ground to disable output, and output will be pulled to ground, when the EN is low, the I^2C can be accessed
FAULT	8	O	Oopen drain output pin, it goes low if any fault flag is set.
ADDR	9	I	Connecting different resistor to this pin to set different I^2C address, see 表 7-4.
VCTRL	10	I	Voltage level at this pin to set the output voltage, see 表 7-3.
SDA	11	I/O	I^2C compatible bi-directional data
SCL	12	I	I^2C compatible clock input
EXTM	13	I	External modulation logic input pin which activates the 22-kHz tone output, feeding signal can be 22-kHz tone or logic high or low.
DOUT	14	O	Tone detection output
DIN	15	I	Tone detection input
VLNB	16	O	Output of the power supply connected to satellite receiver or switch.
VCP	17	O	Gate drive supply voltage, output of charge pump, connect a capacitor between this pin to pin VLNB.
BOOST	18	O	Output of the boost regulator and Input voltage of the internal linear regulator.
GDR	19	O	Control the gate of the external MOSFET for DiSEqc 2.x support.
PGND	20	S	Power ground for Boost Converter
Thermal PAD			Must be soldered to PCB for optimal thermal performance. Have thermal Vias on the PCB to enhance power dissipation.

(1) I = input, O = output, I/O = input and output, S = power supply

Copyright © 2021 Texas Instruments Incorporated

6 Specifications

6.1 Absolute Maximum Ratings

over operating free-air temperature range (unless otherwise noted)(1)

		MIN	MAX	UNIT
Voltage	VIN, LX, BOOST, VLNB	1	30	V
	VCP, GDR (referenced to VLNB pin)	–0.3	7	
	VCC, EN, ADDR, FAULT, SCL, SDA, VCTRL, EXTM, DOUT, DIN, TCAP	–0.3	7	
	ISET	–0.3	3.6	
	PGND	–0.3	0.3	
Operating junction temperature, T_J		–40	150	°C
Storage temperature, T_{stg}		–55	150	

(1) Stresses beyond those listed under *Absolute Maximum Ratings* may cause permanent damage to the device. These are stress ratings only, which do not imply functional operation of the device at these or any other conditions beyond those indicated under *Recommended Operating Conditions*. Exposure to absolute-maximum-rated conditions for extended periods may affect device reliability.

6.2 ESD Ratings

			VALUE	UNIT
$V_{(ESD)}$	Electrostatic discharge	Human-body model (HBM), per ANSI/ESDA/JEDEC JS-001, all pins(1)	±4000	V
		Charged-device model (CDM), per JEDEC specification JESD22-C101, all pins(2)	±1500	

(1) JEDEC document JEP155 states that 500-V HBM allows safe manufacturing with a standard ESD control process.
(2) JEDEC document JEP157 states that 250-V CDM allows safe manufacturing with a standard ESD control process.

6.3 Recommended Operating Conditions

over operating free-air temperature range (unless otherwise noted)

		MIN	NOM	MAX	UNIT
V_{IN}	Input operating voltage	4.5		20	V
T_A	Operating junction temperature	–40		125	°C

6.4 Thermal Information

THERMAL METRIC(1)		TPS65235 RUK (WQFN) 20 PINS	UNIT
$R_{\theta JA}$	Junction-to-ambient thermal resistance	44.8	°C/W
$R_{\theta JC(top)}$	Junction-to-case (top) thermal resistance	47.3	°C/W
$R_{\theta JB}$	Junction-to-board thermal resistance	16.5	°C/W
ψ_{JT}	Junction-to-top characterization parameter	0.5	°C/W
ψ_{JB}	Junction-to-board characterization parameter	16.4	°C/W
$R_{\theta JC(bot)}$	Junction-to-case (bottom) thermal resistance	3.6	°C/W

(1) For more information about traditional and new thermal metrics, see the *Semiconductor and IC Package Thermal Metrics* application report.

Copyright © 2021 Texas Instruments Incorporated

6.5 Electrical Characteristics

T_J = –40°C to 125°C, V_{IN} = 12 V, f_{SW} = 1 MHz (unless otherwise noted)

PARAMETER		TEST CONDITIONS	MIN	TYP	MAX	UNIT
INPUT SUPPLY						
V_{IN}	Input voltage range	VIN	4.5	12	20	V
$I_{DD(SDN)}$	Shutdown supply current	EN = 0	90	120	150	µA
$I_{LDO(Q)}$	LDO quiescent current	EN = 1, I_O = 0 A, VLNB = 18.2 V	2.2	5	7.8	mA
UVLO	V_{IN} Undervoltage Lockout	V_{IN} Rising	4.15	4.3	4.45	V
		Hysteresis	280	480	550	mV
OUTPUT VOLTAGE						
V_{OUT}	Regulated output voltage	$V_{(ctrl)}$ = 1, I_O = 500 mA	18	18.2	18.4	V
		$V_{(ctrl)}$ = 0, I_O = 500 mA	13.25	13.4	13.55	V
		SCL = 1, $V_{(ctrl)}$ = 1, I_O = 500 mA (Non I^2C)	19.18	19.4	19.62	V
		SCL = 1, $V_{(ctrl)}$ = 0, I_O = 500 mA (Non I^2C)	14.44	14.6	14.76	V
$I_{(OCP)}$	Output short circuit current limit	$R_{(SET)}$ = 200 kΩ, Full temperature	580	650	720	mA
		T_J = 25°C	629	650	688	mA
Fsw	Boost switching frequency	1 MHz	977	1060	1134	kHz
$I_{(limitsw)}$	Switching current limit	V_{IN} = 12 V, V_{OUT} = 18.2 V, $R_{(SET)}$ = 200 kΩ	2.4	3	3.6	A
$R_{ds(on)_LS}$	On resistance of low side FET	V_{IN} = 12 V	90	140	210	mΩ
$V_{(drop)}$	Linear regulator voltage drop-out	I_O = 500 mA, TONEAMP = 0	0.44	0.8	1.15	V
		I_O = 500 mA, TONEAMP = 1	0.55	0.9	1.2	V
$I_{(cable)}$	Cable good detection current threshold	V_{IN} = 12 V, V_{OUT} = 13.4 V or 18.2 V	0.9	5	8.8	mA
$I_{(rev)}$	Reverse bias current	EN = 1, VLNB = 21 V	49	58	65	mA
$I_{(rev_dis)}$	Disabled reverse bias current	EN = 0, VLNB = 21 V	2.9	4.6	6.3	mA
LOGIC SIGNALS						
$V_{(EN)}$	Enable threshold High		1.6			V
	Enable threshold Low				0.8	V
$I_{(EN)}$	Enable internal pull up current	$V_{(EN)}$ = 1.5 V	5	6	7	µA
		$V_{(EN)}$ = 1 V	2	3	4	µA
$V_{(VCTRL_H)}$ $V_{(EXTM_H)}$	VCTRL, EXTM Logic threshold level	High level input voltage	2			V
$V_{(VCTRL_L)}$ $V_{(EXTM_L)}$		Low level input voltage			0.8	V
$V_{OL(FAULT)}$	FAULT output low voltage	FAULT open drain, I_{OL} = 1 mA			0.4	V
TONE						
$f_{(tone)}$	Tone frequency	22 kHz tone output	20	22	24	kHz
$A_{(tone)}$	Tone amplitude	I_O = 0 mA to 500 mA, C_O = 100 nF, TONEAMP = 0	617	650	696	mV
		I_O = 0 mA to 500 mA, C_O = 100 nF, TONEAMP = 1	703	750	803	mV
$D_{(tone)}$	Tone duty cycle		45%	50%	55%	
$f_{(EXTM)}$	External tone input frequency range	22 kHz tone output	17.6	22	26.4	kHz
		44 kHz tone output	35.2	44	52.8	kHz
TONE DETECTION						
$f_{(DIN)}$	Tone detector frequency capture range	0.4 V_{PP} sine wave	17.6	22	26.4	kHz
$V_{(DIN)}$	Tone detector input amplitude	Sine wave, 22 kHz	0.3		1.5	V
$V_{(DOUT)}$	DOUT output voltage	Tone present, I_{load} = 2 mA			0.4	V
GDR	Bypass FET gate voltage/LNB	TONE_TRANS = 1, $V_{(LNB)}$ = 18.2 V	23.11	23.5	24.33	V
		TONE_TRANS = 0, $V_{(LNB)}$ = 18.2 V	18.17	18.2	18.23	V
THERMAL SHUT-DOWN (JUNCTION TEMPERATURE)						
$T_{(TRIP)}$	Thermal protection trip Point	Temperature Rising		160		°C
$T_{(HYST)}$	Thermal protection hysteresis			20		°C

Copyright © 2021 Texas Instruments Incorporated

T_J = –40°C to 125°C, V_{IN} = 12 V, f_{SW} = 1 MHz (unless otherwise noted)

PARAMETER		TEST CONDITIONS	MIN	TYP	MAX	UNIT
I²C READ BACK FAULT STATUS						
$V_{(PGOOD)}$	PGOOD trip levels	Feedback voltage UVP low	94%	96%	97.1%	
		Feedback voltage UVP high	93%	94.5%	95.5%	
		Feedback voltage OVP high	104%	106.6%	108%	
		Feedback voltage OVP low	102%	104.6%	106%	
$T_{(warn)}$	Temperature warning Threshold			125		°C
I²C INTERFACE						
V_{IH}	SDA,SCL input high voltage		2			V
V_{IL}	SDA,SCL input low voltage				0.8	V
I_I	Input current	SDA, SCL, V_I = 0.4 to 4.5 V	–10		10	µA
V_{OL}	SDA output low voltage	SDA open drain, I_{OL} = 2 mA			0.4	V
$f_{(SCL)}$	Maximum SCL clock frequency		400			kHz

6.6 Timing Requirements

			MIN	NOM	MAX	UNIT
OUTPUT VOLTAGE						
t_r, t_f	13 V to 18 V transition rising falling time	$C_{(TCAP)}$ = 22 nF		2		ms
$t_{ON(min)}$	Minimum on time for the Low side FET		75	102	130	ns
TONE						
$t_{r(tone)}$	Tone rise time	I_O = 0 mA to 500 mA, C_O = 100 nF, Control Reg1[0] = 0		11		µs
		I_O = 0 mA to 500 mA, C_O = 100 nF, Control Reg1[0] = 1, and EXTM has 44 kHz input		5.5		µs
$t_{f(tone)}$	Tone fall time	I_O = 0 mA to 500 mA, C_O = 100 nF, Control Reg1[0] = 0		10.8		µs
		I_O = 0 mA to 500 mA, C_O = 100 nF, Control Reg1[0] = 1, and EXTM has 44 kHz input		5.4		µs
PROTECTION						
t_{ON}	Overcurrent protection ON Time	TIMER=0	2.3	3.75	5.52	ms
t_{OFF}	Overcurrent protection OFF Time	TIMER=0	98.5	118	133.5	ms
I²C INTERFACE						
t_{BUF}	Bus free time between a STOP and START condition		1.3			µs
t_{HD_STA}	Hold time (repeated) START condition		0.6			µs
t_{SU_STO}	Setup time for STOP condition		0.6			µs
t_{LOW}	LOW period of the SCL clock		1.3			µs
t_{HIGH}	HIGH period of the SCL clock		0.6			µs
t_{SU_STA}	Setup time for a repeated START condition		0.6			µs
t_{SU_DAT}	Data setup time		0.1			µs
t_{HD_DAT}	Data hold time		0		0.9	µs
t_{RCL}	Rise time of SCL signal	Capacitance of one bus line (pF)	20 + 0.1 C_B		300	ns
t_{RCL1}	Rise time of SCL Signal after a Repeated START condition and after an acknowledge BIT	Capacitance of one bus line (pF)	20 + 0.1 C_B		300	ns
t_{FCL}	Fall time of SCL signal	Capacitance of one bus line (pF)	20 + 0.1 C_B		300	ns
t_{RDA}	Rise time of SDA signal	Capacitance of one bus line (pF)	20 + 0.1 C_B		300	ns
t_{FDA}	Fall time of SDA signal	Capacitance of one bus line (pF)	20 + 0.1 C_B		300	ns
C_B	Capacitance of one bus line(SCL and SDA)				400	pF

Copyright © 2021 Texas Instruments Incorporated

6.7 Typical Characteristics

T_A = 25°C, V_{IN} = 12 V, f_{SW} = 1 MHz, C_{Boost} = 2 x 22 µF/35 V (unless otherwise noted)

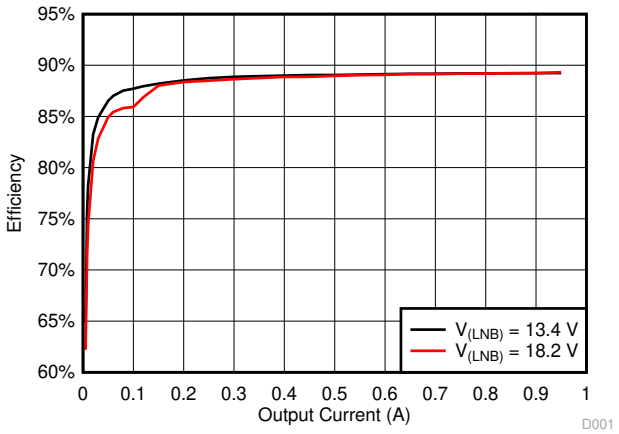

L = 4.7 µH

图 6-1. Power Efficiency

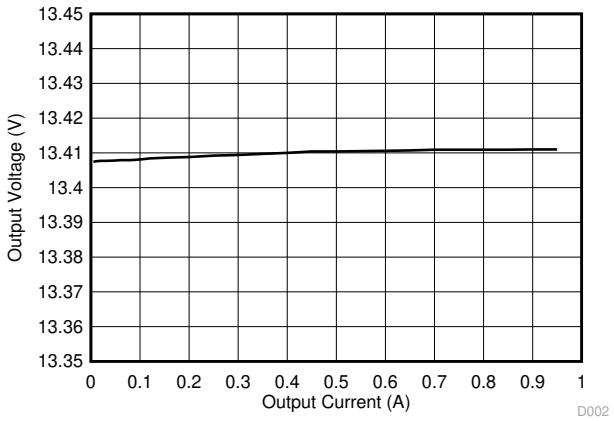

$V_{(LNB)}$ = 13.4 V

图 6-2. Load Regulation

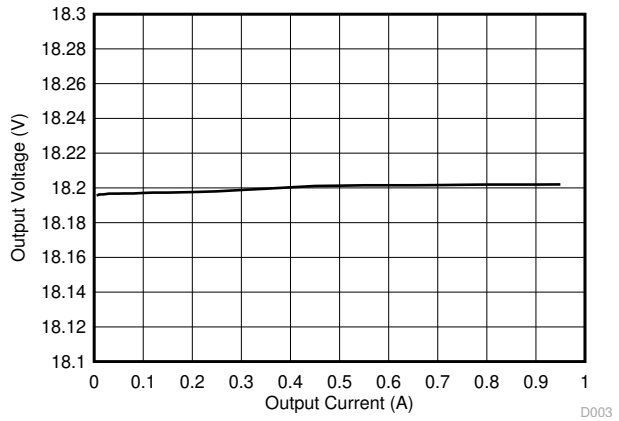

$V_{(LNB)}$ = 18.2 V

图 6-3. Load Regulation

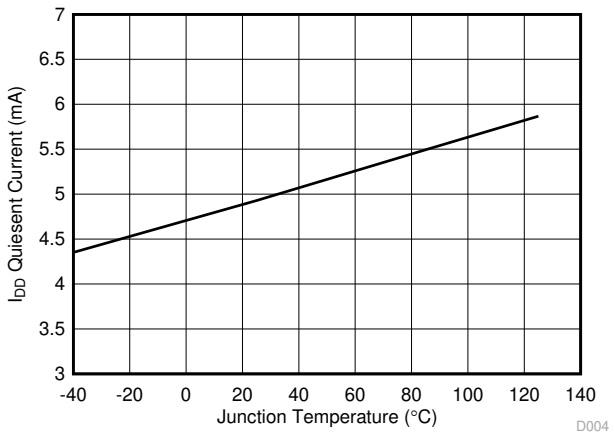

图 6-4. Input Supply Quiescent Current vs Junction Temperature

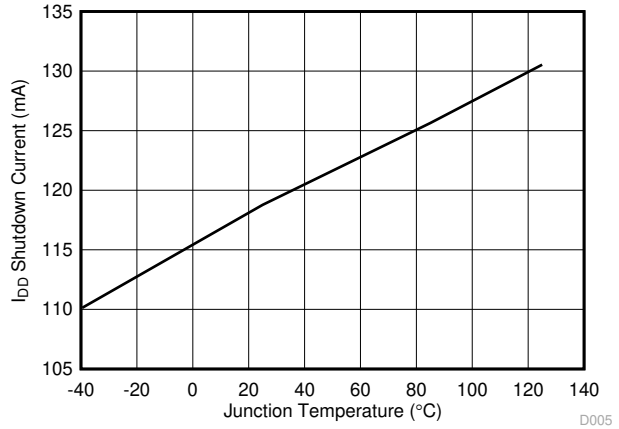

图 6-5. Shutdown Current vs Junction Temperature

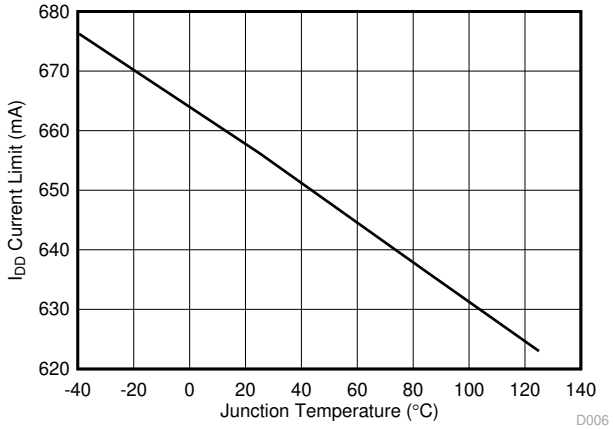

I_{LOAD} = 650 mA

图 6-6. LNB Current Limit vs Junction Temperature

7 Detailed Description

7.1 Overview

TPS65235 is the Power management IC that integrates a boost converter, a LDO and a 22 kHz tone generator to serve as a LNB power supply. This solution compiles the DiSEqC 2.x standard with or without I^{2}C interface. Output current limitation can be precisely programmed by an external resistor. There are two ways to generate the 22 kHz tone signal, with or without I^{2}C. Integrated boost features low $R_{ds(on)}$ MOSFET and internal compensation. 1 MHz or 500 kHz selectable switching frequency is designed to save passive components size and be flexible for design.

TPS65235 can support the 44-kHz tone output, when the EXTM has 44-kHz tone input, and the bit EXTM TONE of *Control Register 1* is set to “1”, the LNB tone output is 44 kHz. By default, the TPS65235 has a typical 22-kHz tone output.

7.2 Functional Block Diagram

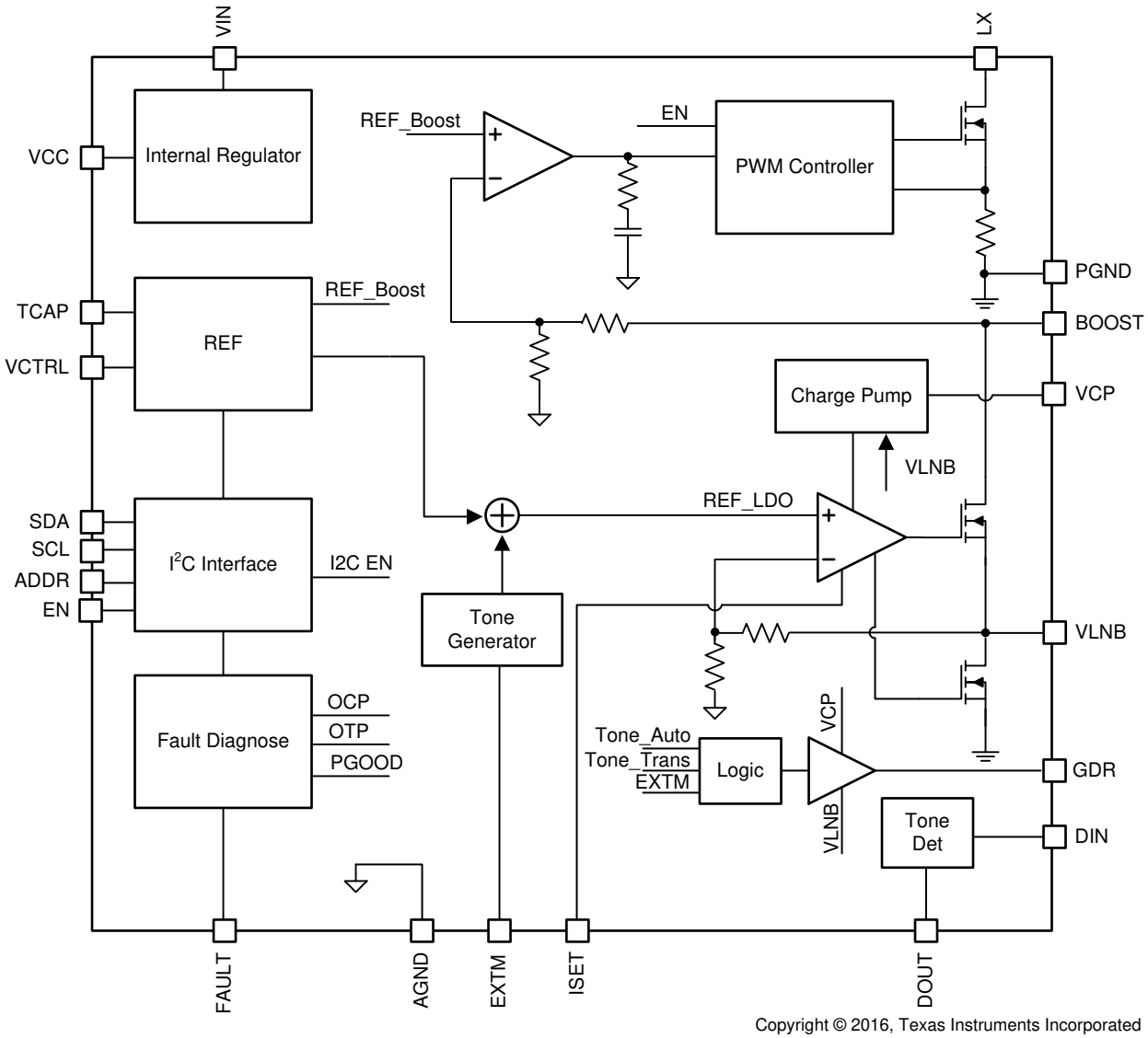

Copyright © 2016, Texas Instruments Incorporated

7.3 Feature Description

7.3.1 Boost Converter

The TPS65235 consists of an internal compensated boost converter and linear regulator. The boost converter tracks the LNB output voltage within 800 mV even at loading 1000 mA, which minimizes power loss. When the

Copyright © 2021 Texas Instruments Incorporated

input voltage VIN is greater than the expected output voltage VLNB, the linear regulator drops the voltage difference between VIN and VLNB, which causes the lower efficiency and the higher power loss on the internal linear regulator if the current loading is high. For this application, care must be taken to ensure that the safe operating temperature range of the TPS65235 is not exceeded. Recommend to work at force PWM mode when $V_{IN} > V_{OUT}$ to reduce output ripple.

As default, the boost converter operates at 1 MHz. TPS65235 has internal cycle-by-cycle peak current limit in the boost converter and DC current limit in the LNB output to protect the IC against short circuits and over loading. When the LNB output is shorted to ground, the LNB output current is clamped at the LDO current limit. The LDO current limit is set by the external resistor at ISET pin; meanwhile the Boost switch current limit is proportional with LDO current limit. If overcurrent condition lasts for more than 4 ms, the Boost converter enters hiccup mode and will re-try startup in 128 ms. This hiccup mode ON/OFF time can be selectable by I^2C control register 0x01, either 4 ms / 128 ms or 8 ms / 256 ms. At extremely light loads, the boost converter operates in a pulse-skipping mode automatically.

Boost converter is stable with either ceramic capacitor or electrolytic capacitor.

If two or more set top box LNB outputs are connected together, one output voltage could be set higher than others. The output with lower set voltage would be effectively turned off. Once the voltage drops to the set level, the LNB output with lower set output voltage returns to normal conditions.

7.3.2 Linear Regulator and Current Limit

The linear regulator is used to generate the 22-kHz tone signal by changing the LDO reference voltage. The linear regulator features low drop out voltage to minimize power loss while keeps enough head room for the 22-kHz tone with 650-mV amplitude. It also implements a tight current limit for overcurrent protection. The current limit is set by an external resistor connected to ISET pin. 图 7-1 shows the relationship between the current limit threshold and the resistor value.

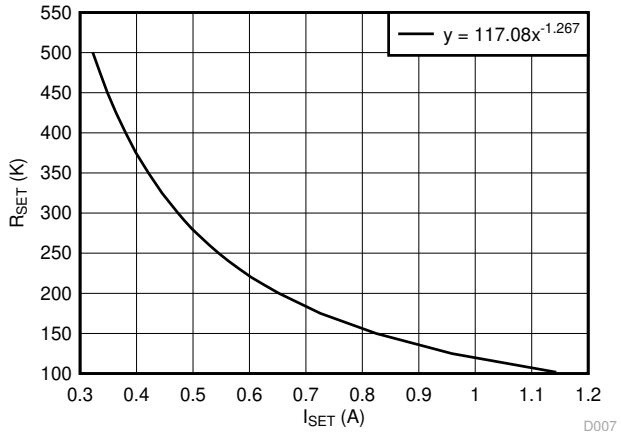

图 7-1. Linear Regulator Current Limit Vs Resistor

$$R_{SET}(k\Omega) = 117.08 \times I_{SET}^{-1.267}(A) \quad (1)$$

A 200-kΩ resistor sets the current to be 0.65 A, and 110-kΩ resistor sets the current to approximately 1 A.

7.3.3 Boost Converter Current Limit

The boost converter has the cycle-by-cycle peak current limit on the internal Power MOSFET switch to serve as the secondary protection when LNB output is hard short. With ISW bit default setting “0” on I²C control register 0x01, the switch current limit I_{SW} is proportional as LDO current limit $I_{(OCP)}$ set by ISET pin resistor, and the relationship can be expressed as:

$$I_{SW} = 3 \times I_{(OCP)} + 0.8A \quad (2)$$

For the 5 V V_{IN}, if LNB current load is up to 1 A, the ISW bit should be written as “1”, the switch current limit I_{SW} for the internal Power MOSFET is:

$$I_{SW} = 5 \times I_{(OCP)} + 0.8A \quad (3)$$

While due to the high power loss at 5 V, V_{IN}, it has a chance to trigger the thermal shutdown before the loading is up to 1 A, especially the VLNB output is high.

7.3.4 Charge Pump

The charge pump circuitry generates a voltage to drive the NMOS of the linear regulator. The voltage across the charge pump capacitor between VLNB and VCP is about 5.4 V, so the absolute value of the VCP voltage will be VLNB + 5.4 V.

7.3.5 Slew Rate Control

When LNB output voltage transits from 13.4 V to 18.2 V or 18.2 V to 13.4 V, the cap at pin TCAP controls the transition time. This transition time makes sure the boost converter output to follow LNB output change. Usually boost converter has low bandwidth and can’t response fast. The voltage at TCAP acts as the reference voltage of the linear regulator. The boost converter’s reference is also based on TCAP with additional fixed voltage to generate a 0.8 V above the LNB output.

The charging and discharging current is 10 µA, thus the transition time can be estimated as:

$$t_{TCAP}(ms) = 0.8 \times \frac{C_{SS}(nF)}{I_{SS}(\mu A)} \quad (4)$$

A 22-nF capacitor generates about 2 ms transition time.

In light load conditions, when LNB output voltage is set from 18.2 V to 13.4 V, the voltage drops very slow, which causes wrong VOUT_GOOD (Bit 0 at status register 0x02) logic for LNB output voltage detection. TPS65235 has integrated a pull down circuit to pull down the output during the transition. This ensures the voltage change can follow the voltage at TCAP. When the 22-kHz tone signal is superimposing on the LNB output voltage, the pull down current can also provide square wave instead of a distorted waveforms.

7.3.6 Short Circuit Protection, Hiccup and Overtemperature Protection

The LNB output current limit can be set by an external resistor. When short circuit conditions occur or current limit is triggered, the output current is clamped at the current limit for 4 ms with LDO on. If the condition retains, the converter will shut down for 128 ms and then restart. This hiccup behavior prevents IC from being overheat. The hiccup ON/OFF time can be set by I²C register. Refer to *Control Register 1* for detail.

The low side MOSFET of the boost converter has a peak current limit threshold which serves as the secondary protection. If boost converter’s peak current limit is triggered, the peak current will be clamped as high as 3.8 A when setting I_{SW} default and LNB current limit up to 1 A. If loading current continues to increase, output voltage starts to drop and output power drops.

Thermal shutdown prevents the chip from operating at exceedingly high temperatures. When the junction temperature exceeds 160°C, the output shuts down. When the die temperature drops below its lower threshold typically 140°C, the output is enabled.

Copyright © 2021 Texas Instruments Incorporated

When the chip is in overcurrent protection or thermal shutdown, the I^2C interface and logic are still active. The Fault pin is pulled down to signal the processor. The Fault pin signal remains low unless the following action is taken:

1. If I^2C interface is not used to control, EN pin must be recycled in order to pull Fault pin back to high.
2. If I^2C interface is used, the I^2C master need to read the status *Control Register 2*, then the Fault pin will be back to high.

7.3.7 Tone Generation

22 kHz tone signal is implemented at the LNB output voltage as a carrier for DiSEqC command. This tone signal can be generated by feeding an external 22-kHz clock at the EXTM pin, and it can also be generated with its internal tone generator controlled by EXTM pin. If EXTM pin is toggled to high, the internal tone signal will be superimposed at the LNB output, if EXTM pin is low, there will be no tone superimposed at the output stage of the regulator facilitates a push-pull circuit, so even at zero loading; the 22-kHz tone at the output is still clean without distortion.

There are two ways to generate the 22 kHz tone signal at the output.

For option1, if the EXTM has 44-kHz tone input, and the bit EXTM TONE of the *Control Register 1* is set to "1", the LNB tone output is 44 kHz.

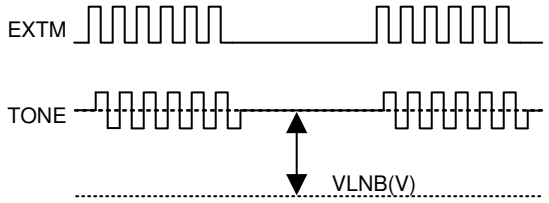

Option 1. Use external tone, gated by EXTM logic pulse

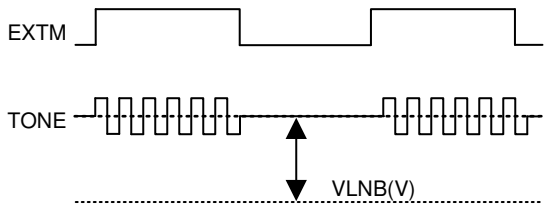

Option 2. Use internal tone, gated by EXTM logic envelop

图 7-2. Two Ways to Generate 22 kHz Tone

7.3.8 Tone Detection

A 22-kHz tone detector is implemented in the TPS65235 solution. The detector extracts the AC coupled tone signal from the DIN input and provides it as an open-drain signal on the DOUT pin. With bit DOUTMODE default setting of the *Control Register 2*, if tone is present, the DOUT output is logic low; if tone is not present, the internal output FET is off. If a pull high resistor is connected to the DOUT pin, the output is logic high. The maximum tone out delay with respect to the input is one and half tone cycle.

Bit DOUTMODE of *Control Register 2* is reserved and should not be used.

Copyright © 2021 Texas Instruments Incorporated

7.3.9 Disable and Enable

TPS65235 has a dedicated EN pin to disable and enable the LNB output. At non-I²C application, when the EN pin is pulled to high, the LNB output is enabled, when the EN pin is pull to low, the LNB output is disabled. At I²C application, either EN pin is low or high, the I²C registers can be accessed, which allows customer to change the default LNB output when system power up. When the bit I2C_CON of *Control Register 1* is set to "1", the LNB output enable or disable is controlled by bit EN of *Control Register 2*. By default, the bit I2C_CON of the control register is set to "0", which makes the LNB output is controlled by the EN pin. 图 7-3 and 图 7-4 shows the detail control behavior.

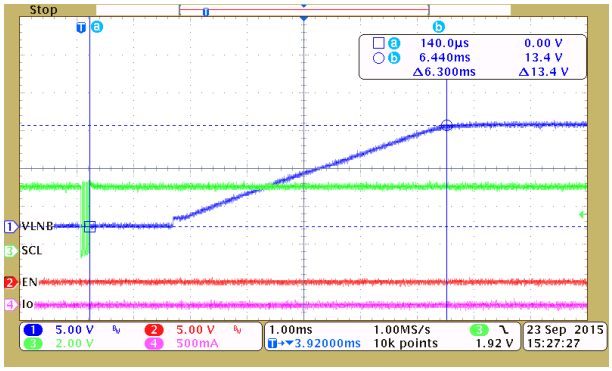

EN pin = 0 V Bit I2C_CON = 1

图 7-3. VLNB Output Controlled by bit EN of Control Register 2

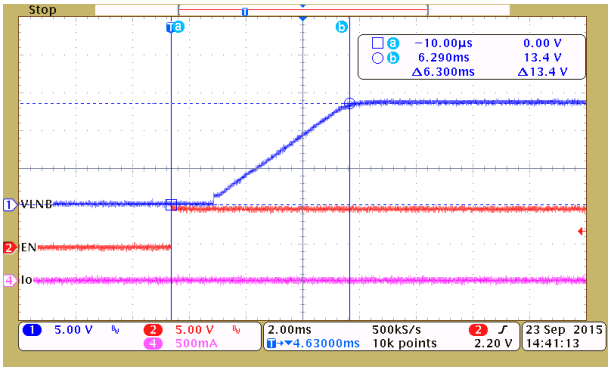

Bit I2C_CON = 0

图 7-4. VLNB Output Controlled by EN Pin

7.3.10 Component Selection

7.3.10.1 Boost Inductor

TPS65235 is recommended to operate with a boost inductor value of 4.7 µH or 10 µH. The boost inductor must be able to support the peak current requirement to maintain the maximum LNB output current without saturation. Below formula can be used to estimate the peak current of the boost inductor.

$$I_{peak} = \frac{I_{OUT}}{1-D} + \frac{1}{2} \times \frac{V_{IN} \times D}{L \times f_S} \quad (5)$$

$$D = 1 - \frac{V_{IN}}{VLNB + 0.8} \quad (6)$$

With the different inductance, the system will have different gain and phase margins, 图 7-5 shows a Bode plot of boost loop with 2 x 10 µF / 35 V of boost capacitor and 4.7 µH, 5.6 µH, 6.8 µH, 8.2 µH and 10 µH of boost inductance. As the boost inductance increases, the 0 dB crossover frequency keeps relatively constant while the phase and gain margins reduced. With 4.7 µH, the phase margin is 66.96° and with 10 µH the phase margin is 39.63°.

Copyright © 2021 Texas Instruments Incorporated

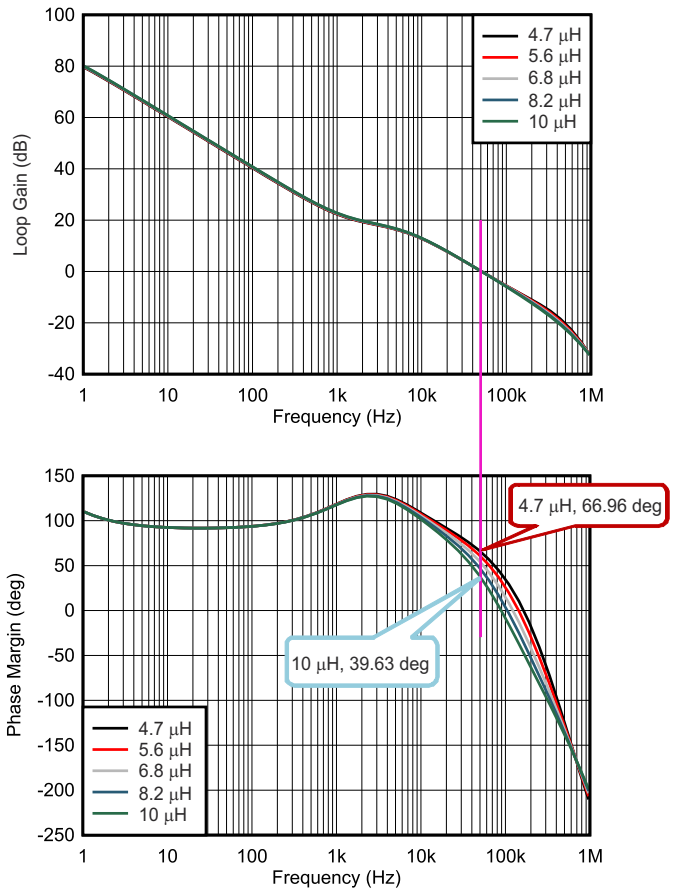

图 7-5. Gain and Phase Margin of the Boost Loop with Different Inductance (V_{IN} = 12 V, V_{OUT} = 18.2 V, I_{LOAD} = 1 A, F_{SW} = 1 MHz, 5 µF, Typical Bode Plot)

7.3.10.2 Capacitor Selection

TPS65235 has a 1 MHz non‑synchronous boost converter integrated and the boost converter features the internal compensation network. TPS65235 works well with both ceramic capacitor and electrolytic capacitor.

In TPS65235 application, the recommended ceramic capacitors rated are at least X7R/X5R, 35 V rating and 1206 size for the achieving lower LNB output ripple. 表 7-1 shows the recommended ceramic capacitors list for both 4.7uH and 10uH boost inductors.

If lower cost is demanded, a 100-µF electrolytic (Low ESR) and a 10-µF/35-V ceramic capacitor also work well, this solution provides lower system cost.

表 7-1. Boost Inductor and Capacitor Selections

Boost Inductor	Capacitors	Tolerance (%)	Rating (V)	Size
10 µH	2 x 22 µF	±10	35	1206
	2 x 10 µF	±10	35	1206
4.7 µH	2 x 22 µF	±10	35	1206
	2 x 10 µF	±10	35	1206
	22 µF	±10	35	1206

Copyright © 2021 Texas Instruments Incorporated

图 7-6 and 图 7-7 show a Bode plot of boost loop with 4.7 µH / 10 µH inductance and 4 µF, 5 µF, 7.5 µF, 10 µF, 15 µF and 20 µF of boost capacitance after degrading. As the boost capacitance increases, the phase margin decreases.

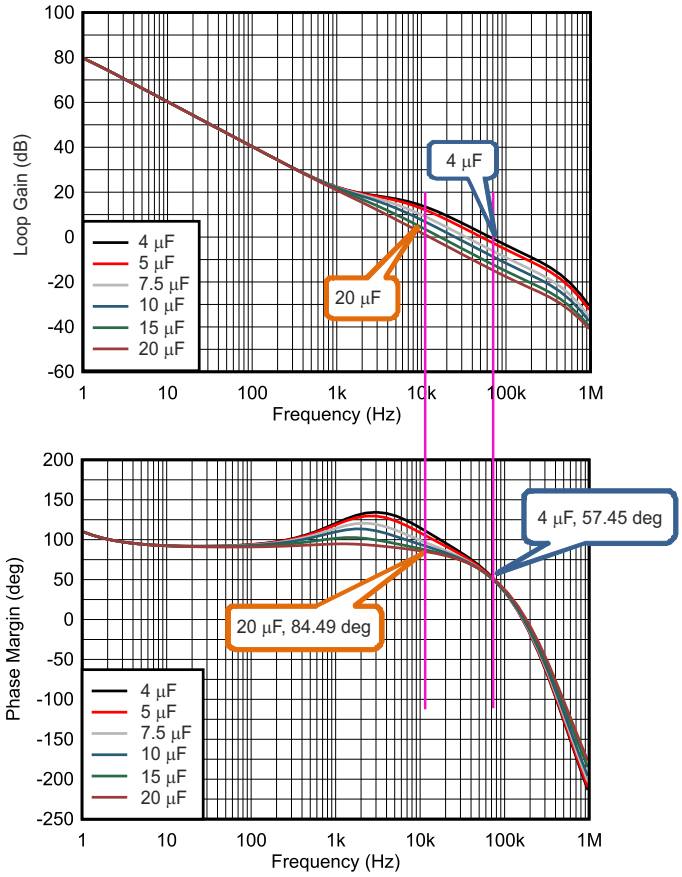

图 7-6. Gain and Phase Margin of the Boost Loop With Different Boost Capacitance (V_{IN} = 12 V, V_{OUT} = 18.2 V, I_{LOAD} = 1 A, F_{SW} = 1 MHz, 4.7 µH, Typical Bode Plot)

Copyright © 2021 Texas Instruments Incorporated

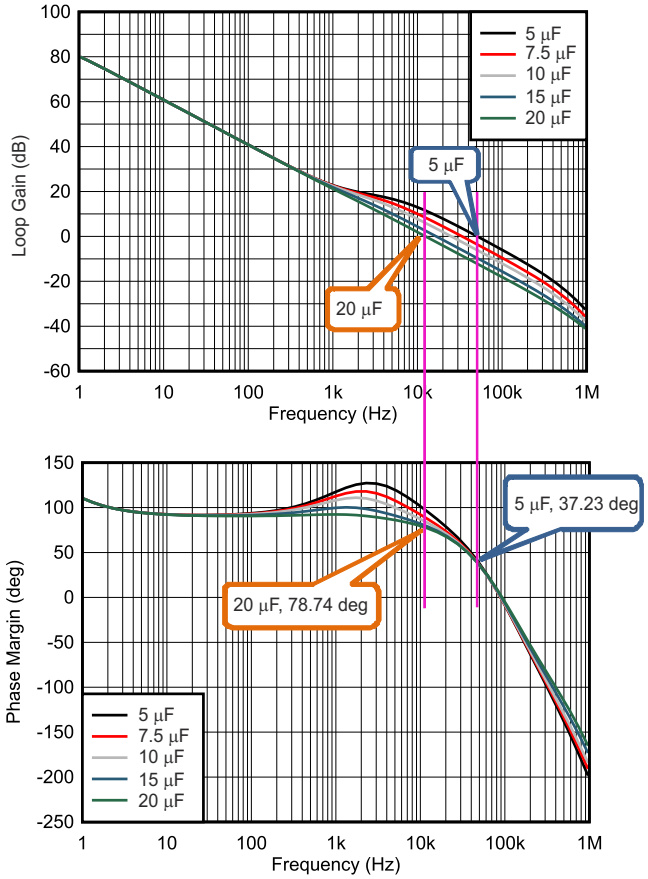

图 7-7. Gain and Phase Margin of the Boost Loop With Different Boost Capacitance (V_{IN} = 12 V, V_{OUT} = 18.2 V, I_{LOAD} = 1 A, F_{SW} = 1 MHz, 10 µH, Typical Bode Plot)

Copyright © 2021 Texas Instruments Incorporated

7.3.10.3 Surge Components

If surge test is needed for the application, D0 and D2 should be added as the external protection components. If no surge test needed. The D0 and D2 can be removed.

表 7-2. Surge Components

Designator	Description	Part Number	Manufacturer
D0	Diode, TVS, Uni, 28 V, 1500 W, SMC	SMCJ28A	Fairchild Semiconductor
D2	Diode, Schottky, 40 V, 2 A, SMA	B240A-13-F	Diodes Inc.

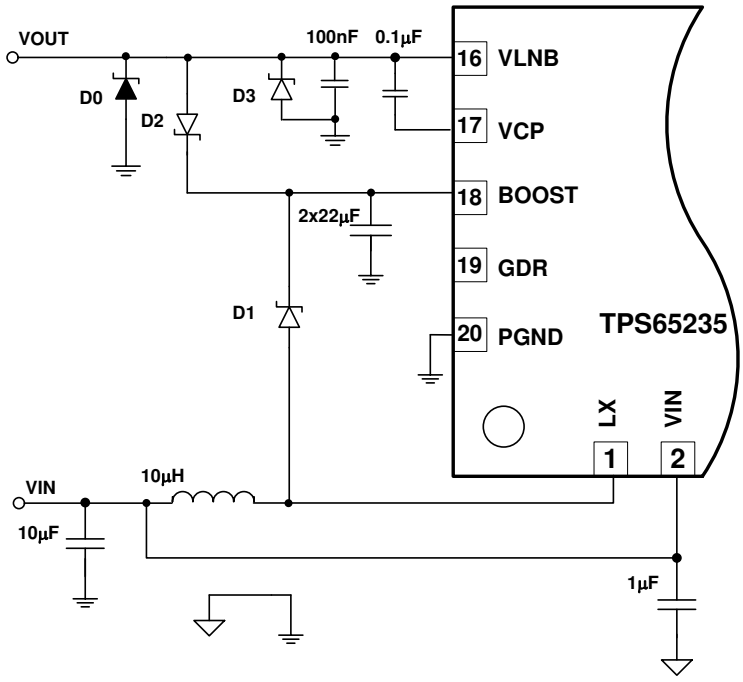

图 7-8. Surge Components Selection

7.3.10.4 Consideration for Boost Filtering and LNB Noise

Smaller capacitance on boost will lead the cost down for the system, while when the inductor in system is same, the smaller capacitance on the boost and the larger ripple on the LNB output.

Copyright © 2021 Texas Instruments Incorporated

7.4 Device Functional Modes

表 7-3. Logic table

EN	12C_CON(1) (2) (3)	SCL	VCTRL	VLNB(4)
H	0	H	H	19.4 V
H	0	H	L	14.6 V
H	0	L	H	18.2 V
H	0	L	L	13.4 V
X	1	X	X	Controlled by VSET[3:0] bits at 0x01 register(5)
L	0	X	X	0 V

(1) I2C_CON is the bit7 of the I^2C control register 0x01, which is used to set the VLNB output controlled by the I^2C register or not.
(2) When I^2C interface is used in design, all the I^2C registers are accessible even if the I2C_CON bit is “0”.
(3) When I2C_CON is “1”, the VLNB output is controlled by the I^2C control register even if the EN pin is low.
(4) When I^2C interface is used in design, it is recommended to set the I2C_CON with “1”, if not, the LNB output will be variable because the SCL is toggled by the I^2C register access as the clock signal.
(5) Bit EN of the control register2 is used to disable or enable the LNB output, by default , the bit EN is "1" which enable the LNB output

Copyright © 2021 Texas Instruments Incorporated

7.5 Programming

7.5.1 Serial Interface Description

I²C is a 2-wire serial interface developed by Philips Semiconductor (see I²C-Bus Specification, Version 2.1, January 2000). The bus consists of a data line (SDA) and a clock line (SCL) with pull-up structures. When the bus is idle, both SDA and SCL lines are pulled high external. All the I²C compatible devices connect to the I²C bus through open drain I/O pins, SDA and SCL. A master device, usually a microcontroller or a digital signal processor, controls the bus. The master is responsible for generating the SCL signal and device addresses. The master also generates specific conditions that indicate the START and STOP of data transfer. A slave device receives and/or transmits data on the bus under control of the master device.

The TPS65235 device works as a slave and supports the following data transfer modes, as defined in the I²CBus Specification: standard mode (100 kbps), and fast mode (400 kbps). The interface adds flexibility to the power supply solution, enabling most functions to be programmed to new values depending on the instantaneous application requirements. Register contents remain intact as long as supply voltage remains above 4.5 V (typical).

The data transfer protocol for standard and fast modes is exactly the same; therefore, they are referred to as F/S-mode in this document. The TPS65235 device supports 7-bit addressing; 10-bit addressing and general call address are not supported.

The TPS65235 device has a 7-bit address set by ADDR pin. 表 7-4 shows how to set the I²C address.

表 7-4. I²C Address Selection

ADDR PIN	I²C ADDRESS	Address Format (A6 ⩾ A0)
Connect to VCC	0x08H	000 1000
Floating	0x09H	000 1001
Connected to GND	0x10H	001 0000
Resistor divider to make ADDR pin voltage in 3 V ~ V_{CC} - 0.8 V	0x11H	001 0001

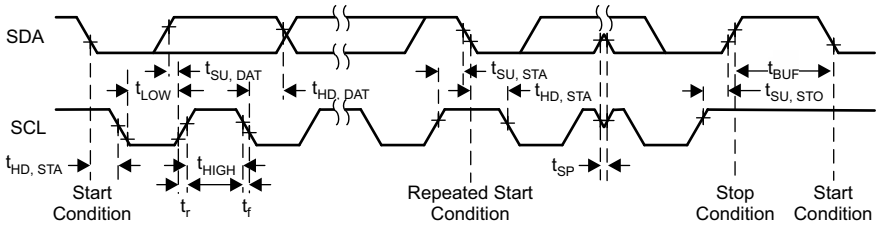

图 7-9. I²C Interface Timing Diagram

Copyright © 2021 Texas Instruments Incorporated

7.5.2 TPS65235 I²C Update Sequence

The TPS65235 requires a start condition, a valid I²C address, a register address byte, and a data byte for a single update. After the receipt of each byte, TPS65235 device acknowledges by pulling the SDA line low during the high period of a single clock pulse. TPS65235 performs an update on the falling edge of the LSB byte.

When the TPS65235 is disabled (EN pin tied to ground) the device cannot be updated via the I²C interface.



图 7-10. I²C Write Data Format

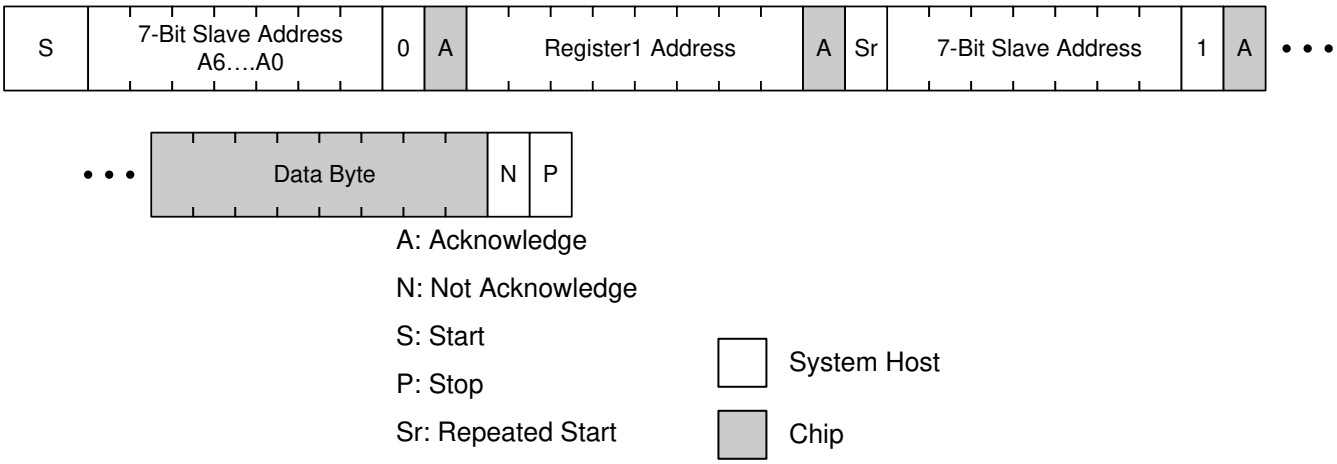

图 7-11. I²C Read Data Format

7.6 Register Maps

7.6.1 Control Register 1 (address = 0x00H) [reset = 00010000]

图 7-10. Control Register 1

7	6	5	4	3	2	1	0
0	0	0	0	1	0	0	0
R/W	R/W	R/W	R/W	R/W	R/W	R/W	R/W

LEGEND: R/W = Read/Write; R = Read only; -n = value after reset

表 7-5. Control Register 1

Bit	Field	Type	Reset	Description
7	I2C_CON	R/W	0	1: I^2C control enabled 0: I^2C control disabled
6	PWM/PSM	R/W	0	0: PSM at light load 1: Forced PWM
5		R/W		See 表 7-6 for output voltage selection
4	VSET3	R/W	0	
3	VSET2	R/W	1	
2	VSET1	R/W	0	
1	VSET0	R/W	0	
0	EXTM TONE	R/W	0	1: EXTM 44-kHz tone input support, with 44-kHz tone output at LNB 0: EXTM 44-kHz tone input not support, with only 22-kHz tone output at LNB

表 7-6. LNB Output Voltage Selection

VSET3	VSET2	VSET1	VSET0	LNB(V)
0	0	0	0	11
0	0	0	1	11.6
0	0	1	0	12.2
0	0	1	1	12.8
0	1	0	0	13.4
0	1	0	1	14
0	1	1	0	14.6
0	1	1	1	15.2
1	0	0	0	15.8
1	0	0	1	16.4
1	0	1	0	17
1	0	1	1	17.6
1	1	0	0	18.2
1	1	0	1	18.8
1	1	1	0	19.4
1	1	1	1	20

Copyright © 2021 Texas Instruments Incorporated

7.6.2 Control Register 2 (address = 0x01H) [reset = 0000101]

图 7-11. Control Register 2

7	6	5	4	3	2	1	0
0	0	0	0	1	0	0	1
R/W	R/W	R/W	R/W	R/W	R/W	R/W	R/W

LEGEND: R/W = Read/Write; R = Read only; -n = value after reset

表 7-7. Control Register 2

Bit	Field	Type	Reset	Description
7	TONEAMP	R/W	0	1: 22 kHz tone amplitude is 750 mV (typ) 0: 22 kHz tone amplitude is 650 mV (typ)
6	TIMER	R/W	0	1: Hiccup ON/OFF time set to 8 ms / 256 ms 0: Hiccup ON/OFF time set to 4 ms / 128 ms
5	I_{SW}	R/W	0	1: Boost switch peak current limit set to 5 x Iocp + 0.8 A 0: Boost switch peak current limit set to 3 x Iocp + 0.8 A
4	FSET	R/W	0	1: 500 kHz switching frequency 0: 1 MHz switching frequency
3	EN	R/W	1	1: LNB output voltage Enabled 0: LNB output disabled
2	DOUTMODE	R/W	0	1: Reserved, cannot set to "1" 0: DOUT is kept to low when DIN has the tone input
1	TONE_AUTO	R/W	0	1: GDR (External bypass FET control) is automatically controlled by 22 kHz tones transmit 0: GDR (External bypass FET control) is controlled by TONE_TRANS
0	TONE_TRANS	R/W	1	1: GDR output with VCP voltage. Bypass FET is ON for tone transmit from TPS65235 0: GDR output with VLNB voltage for tone receive. Bypass FET is OFF for tone receiving from satellite

表 7-8. 22-kHz Tone Receive Mode Selection

TONE_AUTO	TONE_TRANS	Bypass FET
0	0	OFF
0	1	ON
1	x	Auto Detect

TPS65235 has full range of diagnostic flags for operation and debug. Processor can read the status register to check the error conditions. Once the error happens, the flags are changed, once the errors are gone, the flags are set back without I^2C access.

If flags TSD and OCP are triggered, FAULT pin will be pulled low, so FAULT pin can be the interrupt signal to processor. Once TSD and OCP are set to “1”, the FAULT pin logic is latched to low, processor need to read this status register in order to release the fault conditions.

Copyright © 2021 Texas Instruments Incorporated

7.6.3 Status Register (address = 0x02H) [reset = x0100000]

图 7-12. Status Register

7	6	5	4	3	2	1	0
0	0	0	0	1	0	0	1
R	R	R	R	R	R	R	R

LEGEND: R/W = Read/Write; R = Read only; -n = value after reset

表 7-9. Status Register

Bit	Field	Type	Reset	Description
7	Reserved	R		Reserved
6	TDETGOOD	R	0	1: 22 kHz tone detected on DIN pin is in range 0: 22 kHz tone detected on DIN pin is out of range
5	LDO_ON	R	1	1: Internal LDO is turned on and boost converter is on 0: Internal LDO is turned off but boost converter is on
4	T125	R	0	Die temperature > 125°C Die temperature < 125°C
3	TSD	R	0	1: Thermal shutdown triggered. The Fault pin logic is latched to low, processor need to read this register in order to release the fault conditions 0: No thermal shutdown triggered
2	OCP	R	0	1: Over current protection triggered. The Fault pin logic is latched to low, processor need to read this register in order to release the fault conditions 0: Overcurrent protection conditions released
1	CABLE_GOOD	R	0	1: Cable connection good 0: Cable not connected
0	VOUT_GOOD	R	0	1: LNB output voltage in range 0: LNB output voltage out of range

Copyright © 2021 Texas Instruments Incorporated

8 Application and Implementation

Note

Information in the following applications sections is not part of the TI component specification, and TI does not warrant its accuracy or completeness. TI's customers are responsible for determining suitability of components for their purposes, as well as validating and testing their design implementation to confirm system functionality.

8.1 Application Information

8.2 Typical Application for DiSEqc1.x Support

TPS65235 can work at both I²C and non I²C interface mode, 图 8-1 shows the application with I²C interface for supporting DiSEqC 1.x application. With non I²C mode, the SCL, SDA and ADDR pins can be floating.

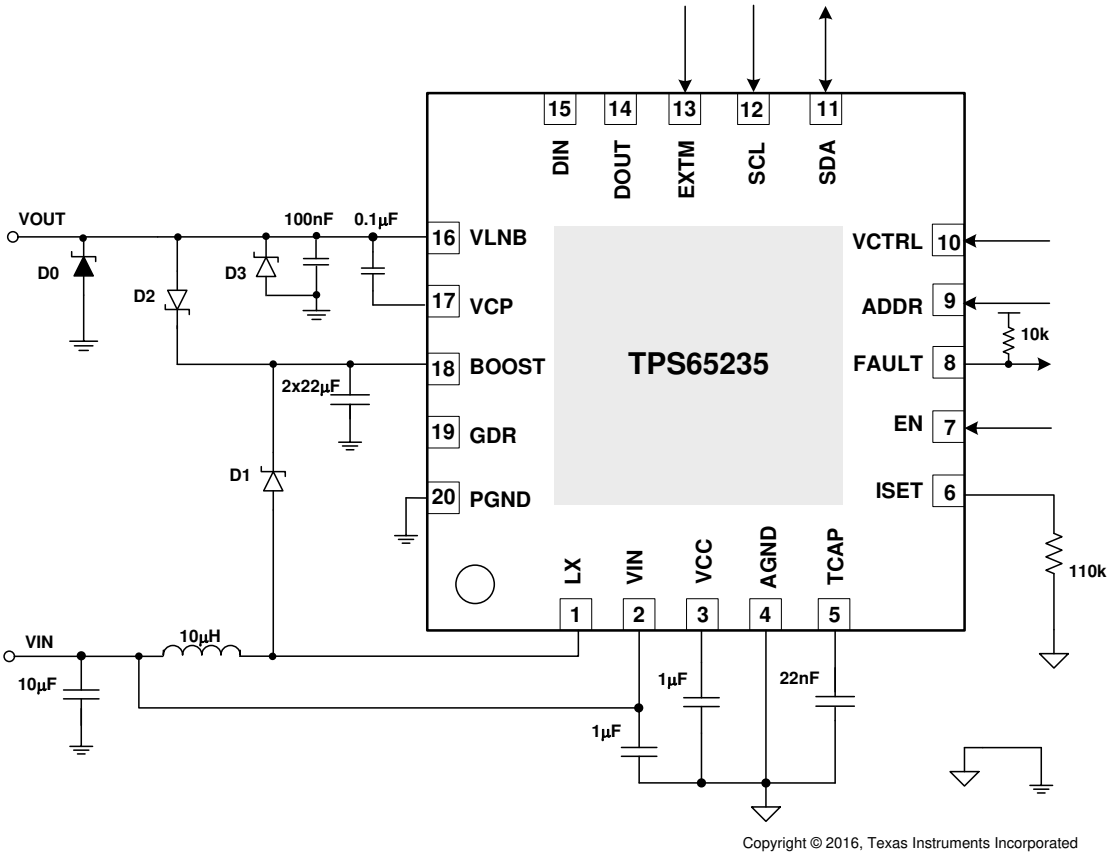

图 8-1. Application for DiSEqc1.x Support

8.2.1 Design Requirements

For this design example, see the parameters in 表 8-1.

表 8-1. Design Parameters

PARAMETER	VALUE
Input voltage range, V_{IN}	4.5 V to 16 V
Output voltage range V_{LNB}	11 V to 20 V
Output current range	0 A to 1 A

8.2.2 Detailed Design Procedure

To begin the design process, following need to be done:

- Inductor choose
  - Based on the cost requirement, ripple requirement and 节 *7.3.10* to choose the appropriate inductor.
- Boost capacitor choose
  - Based on the cost requirement, ripple requirement and 节 *7.3.10* to choose the appropriate capacitors.
- Diodes choose.
  - D0 and D2 are for the surge protection requirement, if not requirement for surge, it can be removed. Refer to 节 *7.3.10.3* for the part selection.
  - D1 is for the boost loop, schottky diode is recommended. The current and voltage capability of the D1 can be determined by the detail application which including input and output power range, and current requirement.
  - D3 is for the V_{LNB} output protection, schottky diode is recommended. The current and voltage capability of the D3 can be determined by the detail application for the output.

Copyright © 2021 Texas Instruments Incorporated

8.2.3 Application Curves

T_A = 25°C, V_{IN} = 12 V, f_{SW} = 1 MHz, C_{Boost} = 2 x 22 µF/35 V (unless otherwise noted)

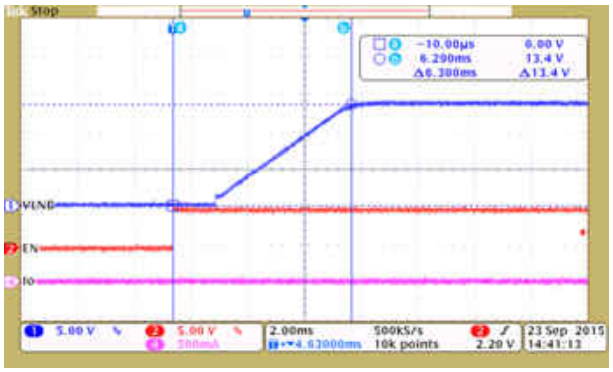

V_{LNB} = 13.4 V

图 8-2. Soft Start, Delay from EN High to LNB Output High

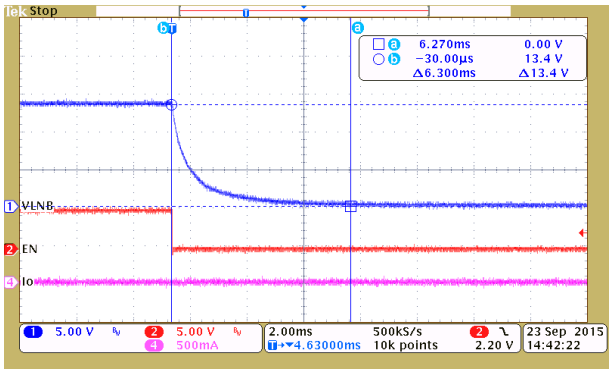

V_{LNB} = 13.4 V

图 8-3. Disabled, Delay From EN Low to LNB Output Low

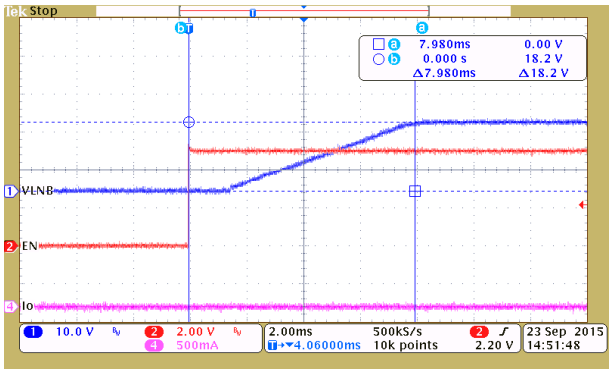

V_{LNB} = 18.2 V

图 8-4. Soft Start,Delay from EN High to LNB Output High

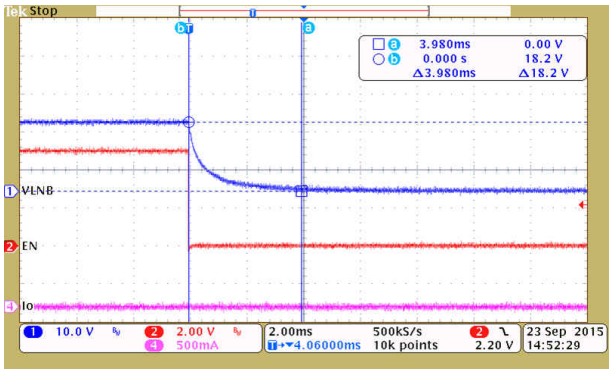

VLNB = 18.2 V

图 8-5. Disabled, Delay From EN Low to LNB Output Low

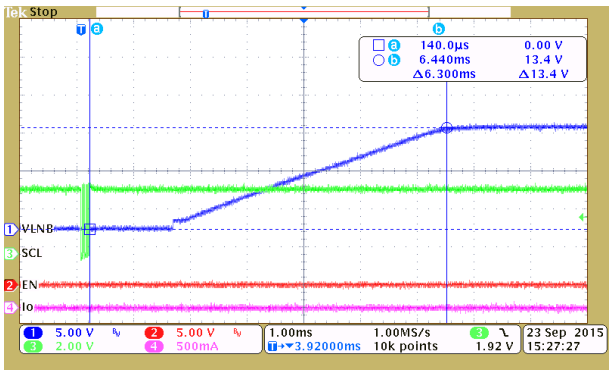

EN = 0 V_{LNB} = 13.4 V

图 8-6. Soft Start, Delay From I²C Enable (I2C_CON=1) to LNB Output High

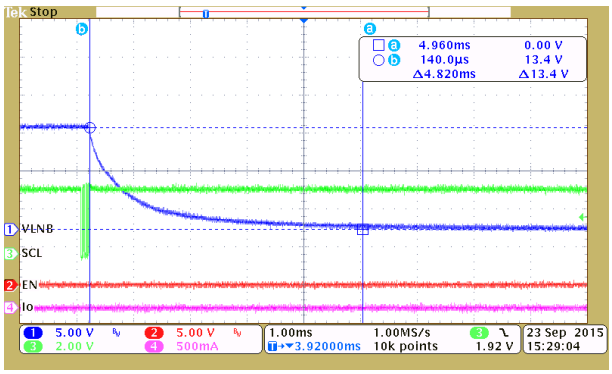

EN = 0 V_{LNB} = 13.4 V

图 8-7. Delay From I²C Disable (I2C_CON=0) to LNB Output Low

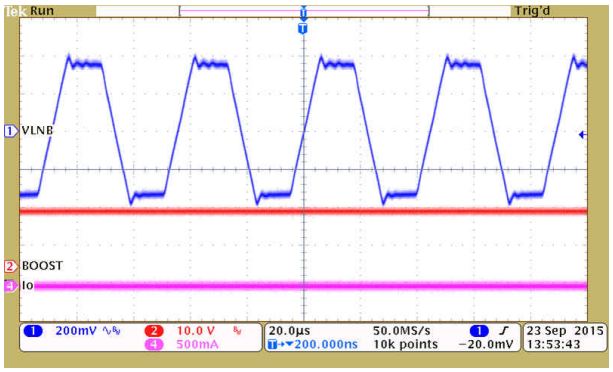

V_{LNB} = 13.4 V

图 8-8. No Load, 22 kHz Tone Output

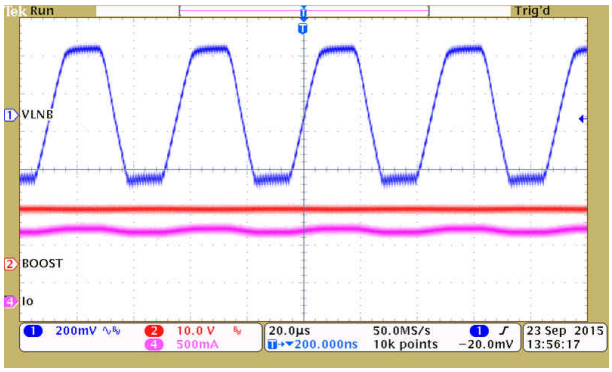

V_{LNB} = 13.4 V

图 8-9. 950 mA Load, 22 kHz Tone Output

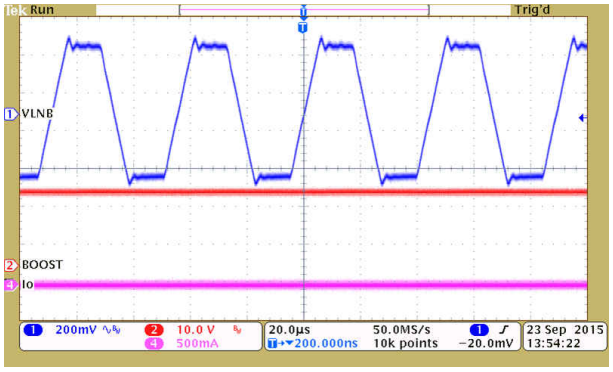

V_{LNB} = 18.2 V

图 8-10. No Load, 22 kHz Tone Output

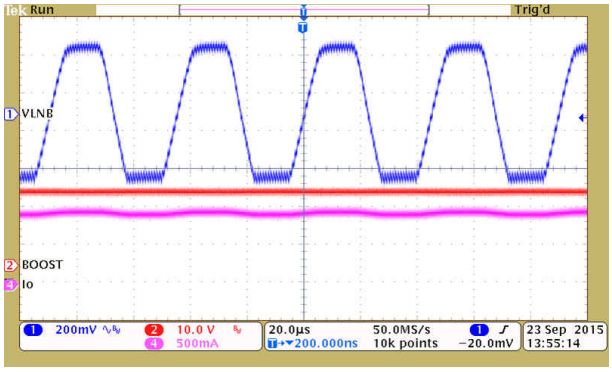

V_{LNB} = 18.2 V

图 8-11. 950 mA Load, 22 kHz Tone Output

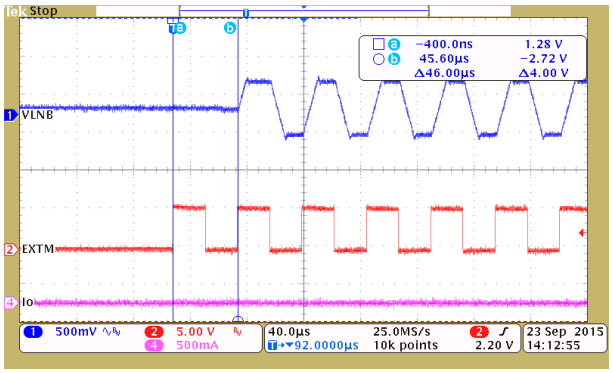

图 8-12. No load, 22 kHz Tone Delay from EXTM 22 kHz Input Turns High To Output Tone On

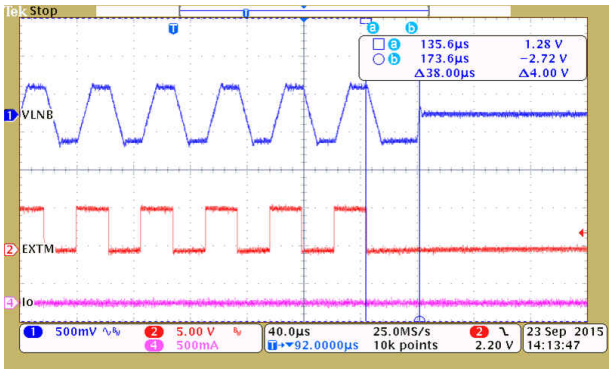

图 8-13. No load, 22 kHz Tone Delay from EXTM 22 kHz Input Turns Low To Output Tone Off

Copyright © 2021 Texas Instruments Incorporated

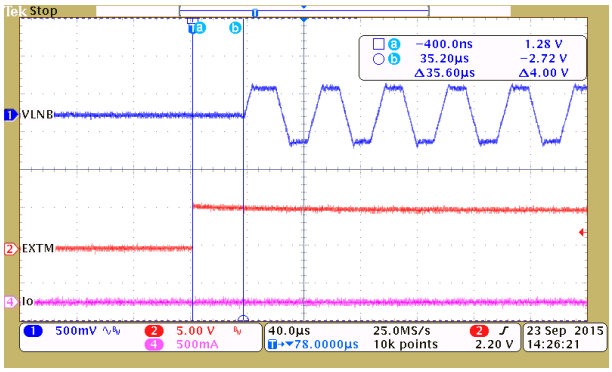

图 8-14. No Load, 22 kHz Tone Delay From EXTM Tone Envelop Input Turns High To Output Tone On

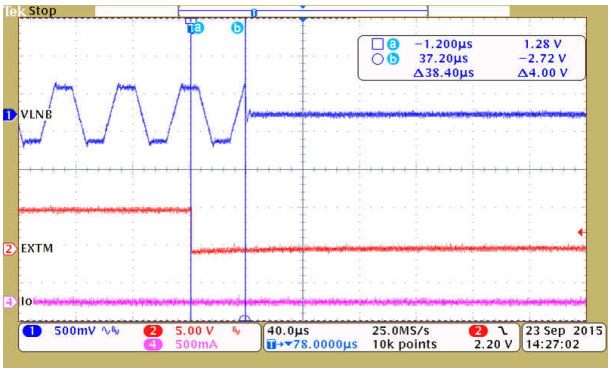

图 8-15. No Load, 22 kHz Tone Delay From EXTM Tone Envelop Input Turns Low To Output Tone Off

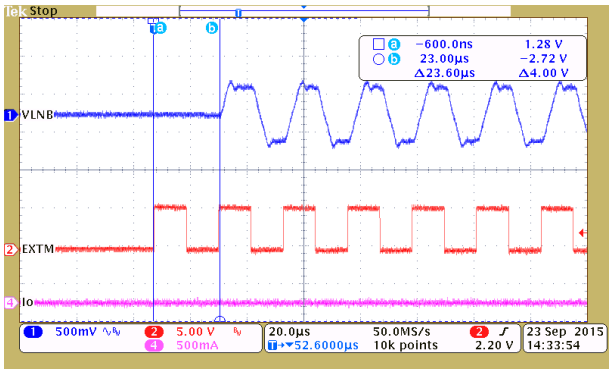

图 8-16. No Load, 44 kHz Tone Delay From EXTM 22 kHz Input Turns High To Output Tone On

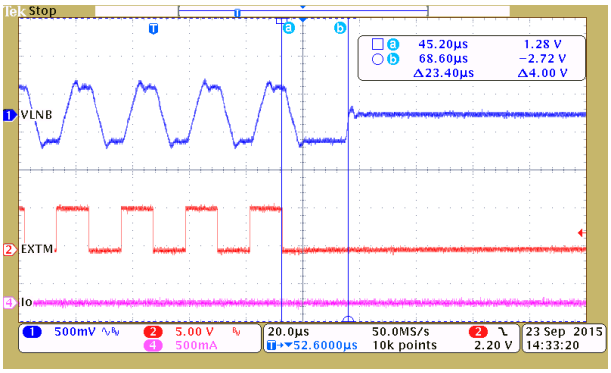

图 8-17. No Load, 44 kHz Tone Delay From EXTM 22 kHz Input Turns Low To Output Tone Off

Copyright © 2021 Texas Instruments Incorporated

8.2.4 Typical Application for DiSEqc2.x Support

TPS65235 can support both DiSEqC 1.x application and DiSEqC 2.x application, 图 8-18 shows the application for supporting DiSEqC 2.x application.

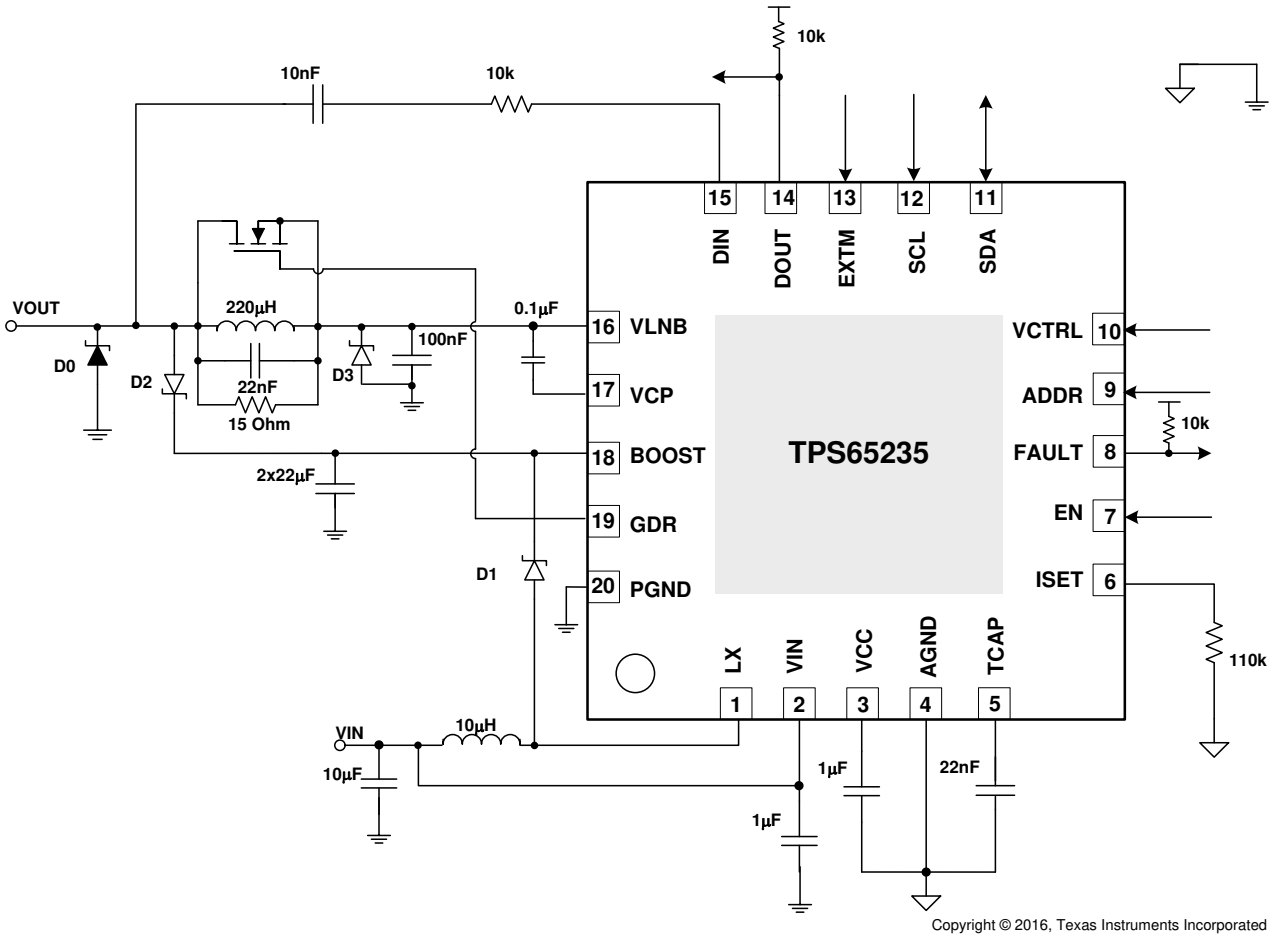

图 8-18. Application for DiSEqc2.x Support

8.2.4.1 Design Requirements

Refer to 节 8.2 for design requirements.

8.2.4.2 Detailed Design Procedure

Refer to 节 8.2 for detailed design procedures.

Copyright © 2021 Texas Instruments Incorporated

8.2.4.3 Application Curves

Refer to 节 8.2 for application curves. While 图 8-19 is special for DiSEqC 2.x application for tone detection.

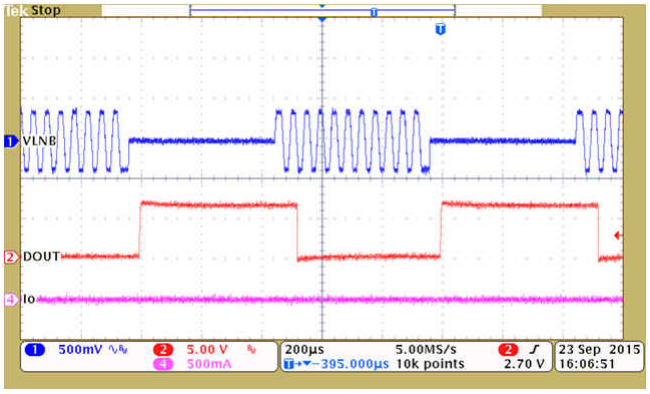

图 8-19. DOUT Tone Detection Output

9 Power Supply Recommendations

The devices are designed to operate from an input supply ranging from 4.5 V to 16 V. The input supply should be well regulated. If the input supply is located more than a few inches from the converter, an additional bulk capacitance typically 100 µF may be required in addition to the ceramic bypass capacitors.

Copyright © 2021 Texas Instruments Incorporated

10 Layout

10.1 Layout Guidelines

TPS65235 is designed to layout in 2 - layer PCB. To ensure reliability of the device, following common printed-circuit board layout guidelines is recommended.

- It is critical to make sure the GND of input capacitor, output capacitor and the boost converter are connected at one point at same layer.
- PGND and AGND are in different region, they are connected to the thermal pad. Other components are connected AGND.
- Put the capacitors for boost as close as possible.
- The loop from V_{IN}, inductor to LX should be as short as possible.
- The loop from V_{IN}, inductor, D1 Schottky diode to Boost should be as short as possible.
- The loop for boost capacitors to PGND should be within the loop from LX, D1 Schottky diode to Boost.

10.2 Layout Example

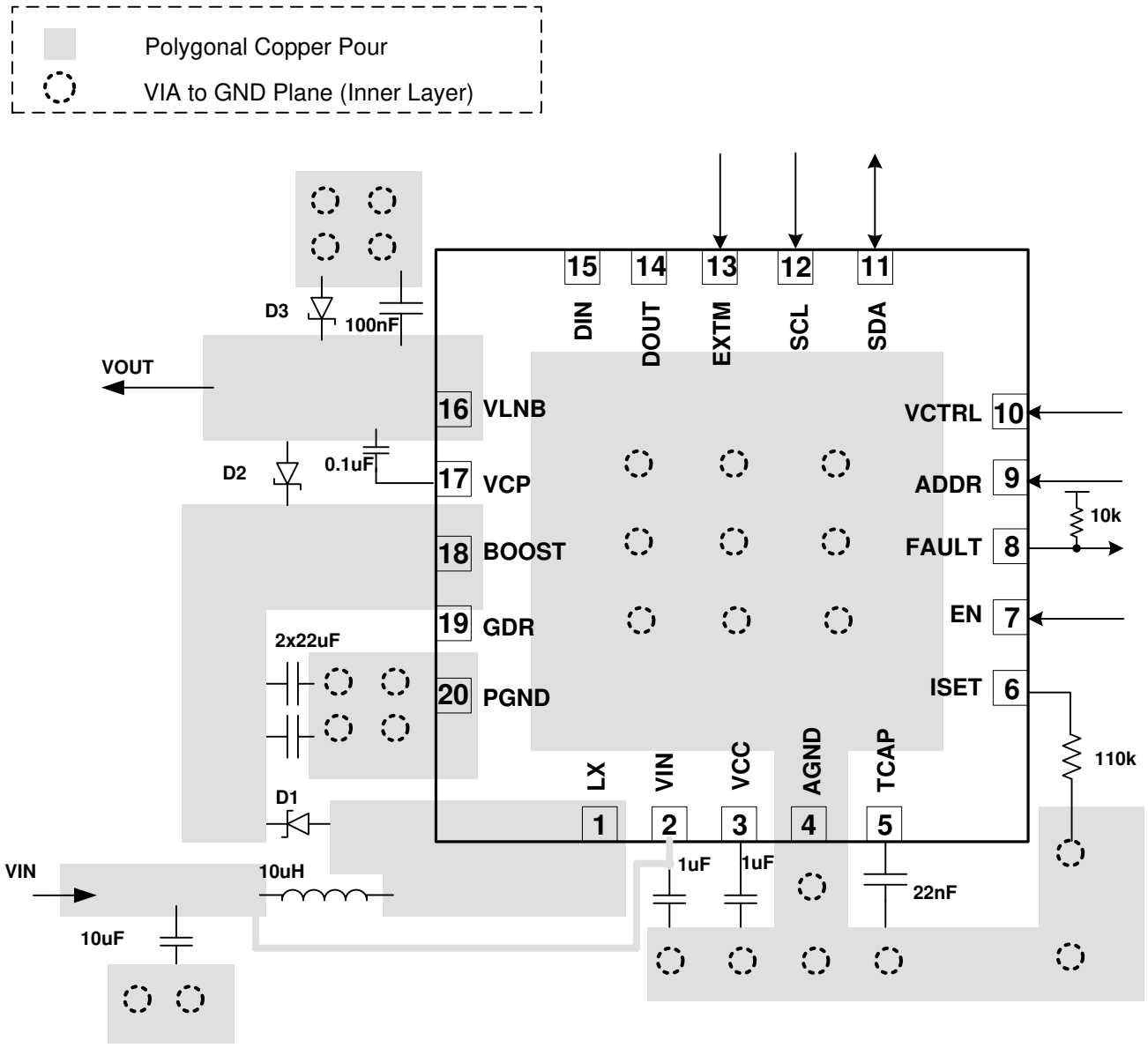

图 10-1. Layout

Copyright © 2021 Texas Instruments Incorporated

11 Device and Documentation Support

11.1 接收文档更新通知

要接收文档更新通知，请导航至 ti.com 上的器件产品文件夹。点击 *订阅更新* 进行注册，即可每周接收产品信息更改摘要。有关更改的详细信息，请查看任何已修订文档中包含的修订历史记录。

11.2 支持资源

TI E2E™ 支持论坛是工程师的重要参考资料，可直接从专家获得快速、经过验证的解答和设计帮助。搜索现有解答或提出自己的问题可获得所需的快速设计帮助。

链接的内容由各个贡献者“按原样”提供。这些内容并不构成 TI 技术规范，并且不一定反映 TI 的观点；请参阅 TI 的《使用条款》。

11.3 Trademarks

TI E2E™ is a trademark of Texas Instruments.
所有商标均为其各自所有者的财产。

11.4 Electrostatic Discharge Caution



This integrated circuit can be damaged by ESD. Texas Instruments recommends that all integrated circuits be handled with appropriate precautions. Failure to observe proper handling and installation procedures can cause damage.

ESD damage can range from subtle performance degradation to complete device failure. Precision integrated circuits may be more susceptible to damage because very small parametric changes could cause the device not to meet its published specifications.

11.5 Glossary

TI Glossary	This glossary lists and explains terms, acronyms, and definitions.

12 Mechanical, Packaging, and Orderable Information

The following pages include mechanical, packaging, and orderable information. This information is the most current data available for the designated devices. This data is subject to change without notice and revision of this document. For browser-based versions of this data sheet, refer to the left-hand navigation.

Copyright © 2021 Texas Instruments Incorporated

重要声明和免责声明

TI 提供技术和可靠性数据（包括数据表）、设计资源（包括参考设计）、应用或其他设计建议、网络工具、安全信息和其他资源，不保证没有瑕疵且不做出任何明示或暗示的担保，包括但不限于对适销性、某特定用途方面的适用性或不侵犯任何第三方知识产权的暗示担保。

这些资源可供使用 TI 产品进行设计的熟练开发人员使用。您将自行承担以下全部责任：(1) 针对您的应用选择合适的 TI 产品，(2) 设计、验证并测试您的应用，(3) 确保您的应用满足相应标准以及任何其他安全、安保或其他要求。这些资源如有变更，恕不另行通知。TI 授权您仅可将这些资源用于研发本资源所述的 TI 产品的应用。严禁对这些资源进行其他复制或展示。您无权使用任何其他 TI 知识产权或任何第三方知识产权。您应全额赔偿因在这些资源的使用中对 TI 及其代表造成的任何索赔、损害、成本、损失和债务，TI 对此概不负责。

TI 提供的产品受 TI 的销售条款 (https:www.ti.com/legal/termsofsale.html) 或 ti.com 上其他适用条款/TI 产品随附的其他适用条款的约束。TI 提供这些资源并不会扩展或以其他方式更改 TI 针对 TI 产品发布的适用的担保或担保免责声明。

邮寄地址：Texas Instruments, Post Office Box 655303, Dallas, Texas 75265
Copyright © 2021，德州仪器 (TI) 公司

PACKAGING INFORMATION

Orderable part number	Status (1)	Material type (2)	Package | Pins	Package qty | Carrier	RoHS (3)	Lead finish/ Ball material (4)	MSL rating/ Peak reflow (5)	Op temp (°C)	Part marking (6)
TPS65235RUKR	Active	Production	WQFN (RUK) | 20	3000 | LARGE T&R	Yes	NIPDAU	Level-1-260C-UNLIM	-40 to 125	65235
TPS65235RUKR.A	Active	Production	WQFN (RUK) | 20	3000 | LARGE T&R	Yes	NIPDAU	Level-1-260C-UNLIM	-40 to 125	65235
TPS65235RUKT	Active	Production	WQFN (RUK) | 20	250 | SMALL T&R	Yes	NIPDAU	Level-2-260C-1 YEAR	-40 to 125	65235
TPS65235RUKT.A	Active	Production	WQFN (RUK) | 20	250 | SMALL T&R	Yes	NIPDAU	Level-2-260C-1 YEAR	-40 to 125	65235

(1) **Status:** For more details on status, see our product life cycle.

(2) **Material type:** When designated, preproduction parts are prototypes/experimental devices, and are not yet approved or released for full production. Testing and final process, including without limitation quality assurance, reliability performance testing, and/or process qualification, may not yet be complete, and this item is subject to further changes or possible discontinuation. If available for ordering, purchases will be subject to an additional waiver at checkout, and are intended for early internal evaluation purposes only. These items are sold without warranties of any kind.

(3) **RoHS values:** Yes, No, RoHS Exempt. See the TI RoHS Statement for additional information and value definition.

(4) **Lead finish/Ball material:** Parts may have multiple material finish options. Finish options are separated by a vertical ruled line. Lead finish/Ball material values may wrap to two lines if the finish value exceeds the maximum column width.

(5) **MSL rating/Peak reflow:** The moisture sensitivity level ratings and peak solder (reflow) temperatures. In the event that a part has multiple moisture sensitivity ratings, only the lowest level per JEDEC standards is shown. Refer to the shipping label for the actual reflow temperature that will be used to mount the part to the printed circuit board.

(6) **Part marking:** There may be an additional marking, which relates to the logo, the lot trace code information, or the environmental category of the part.

Multiple part markings will be inside parentheses. Only one part marking contained in parentheses and separated by a "~" will appear on a part. If a line is indented then it is a continuation of the previous line and the two combined represent the entire part marking for that device.

Important Information and Disclaimer: The information provided on this page represents TI's knowledge and belief as of the date that it is provided. TI bases its knowledge and belief on information provided by third parties, and makes no representation or warranty as to the accuracy of such information. Efforts are underway to better integrate information from third parties. TI has taken and continues to take reasonable steps to provide representative and accurate information but may not have conducted destructive testing or chemical analysis on incoming materials and chemicals. TI and TI suppliers consider certain information to be proprietary, and thus CAS numbers and other limited information may not be available for release.

In no event shall TI's liability arising out of such information exceed the total purchase price of the TI part(s) at issue in this document sold by TI to Customer on an annual basis.

TAPE AND REEL INFORMATION

REEL DIMENSIONS

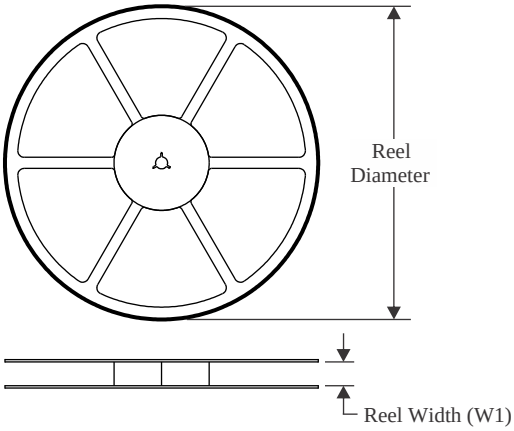

TAPE DIMENSIONS

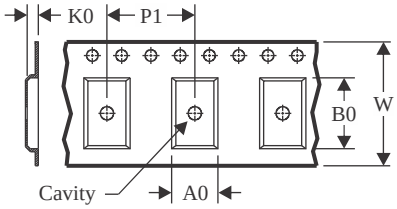

A0	Dimension designed to accommodate the component width
B0	Dimension designed to accommodate the component length
K0	Dimension designed to accommodate the component thickness
W	Overall width of the carrier tape
P1	Pitch between successive cavity centers

QUADRANT ASSIGNMENTS FOR PIN 1 ORIENTATION IN TAPE

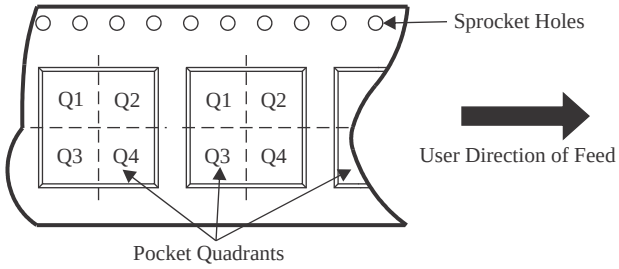

*All dimensions are nominal

Device	Package Type	Package Drawing	Pins	SPQ	Reel Diameter (mm)	Reel Width W1 (mm)	A0 (mm)	B0 (mm)	K0 (mm)	P1 (mm)	W (mm)	Pin1 Quadrant
TPS65235RUKR	WQFN	RUK	20	3000	330.0	12.4	3.3	3.3	1.1	8.0	12.0	Q2

TAPE AND REEL BOX DIMENSIONS

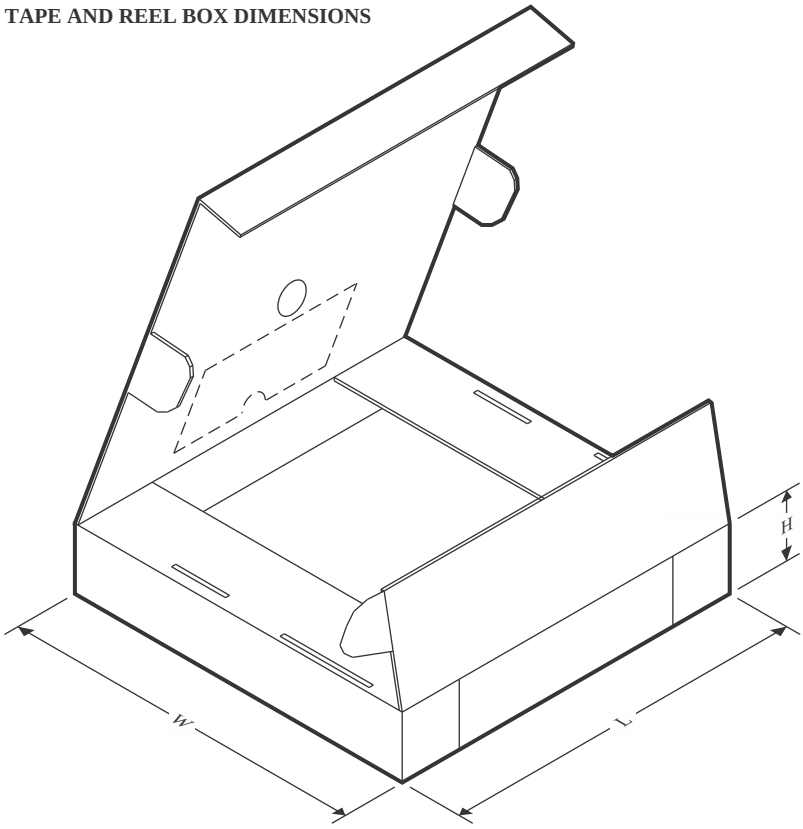

*All dimensions are nominal

Device	Package Type	Package Drawing	Pins	SPQ	Length (mm)	Width (mm)	Height (mm)
TPS65235RUKR	WQFN	RUK	20	3000	353.0	353.0	32.0

GENERIC PACKAGE VIEW

RUK 20

WQFN - 0.8 mm max height

3 x 3, 0.4 mm pitch

PLASTIC QUAD FLATPACK - NO LEAD

This image is a representation of the package family, actual package may vary.
Refer to the product data sheet for package details.

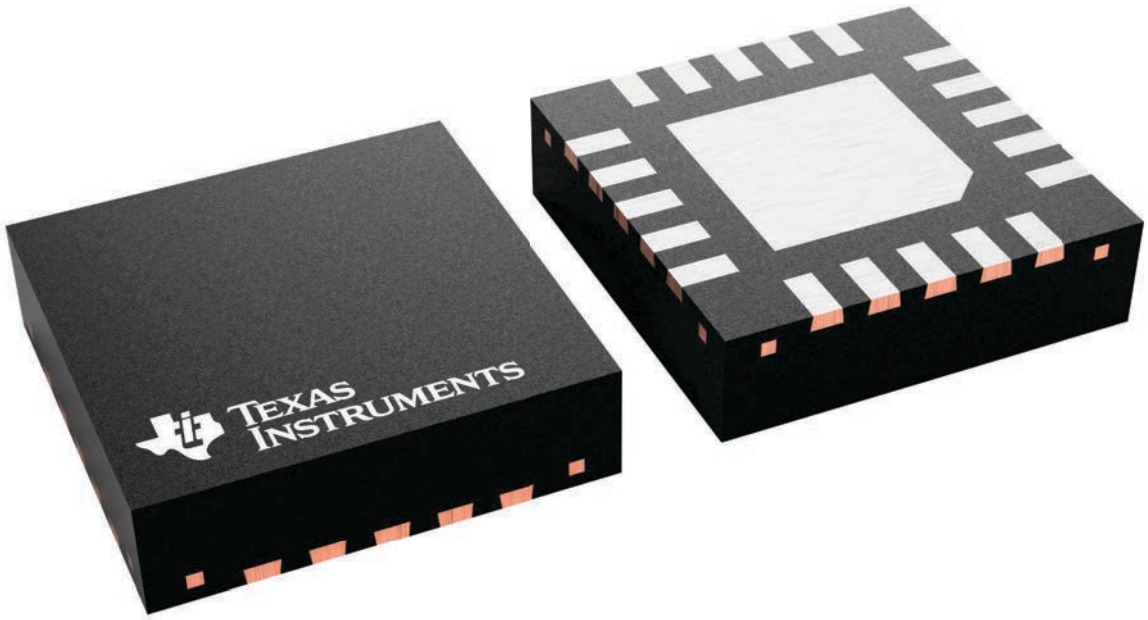

4229651/A

PACKAGE OUTLINE

RUK0020B

WQFN - 0.8 mm max height

PLASTIC QUAD FLATPACK - NO LEAD

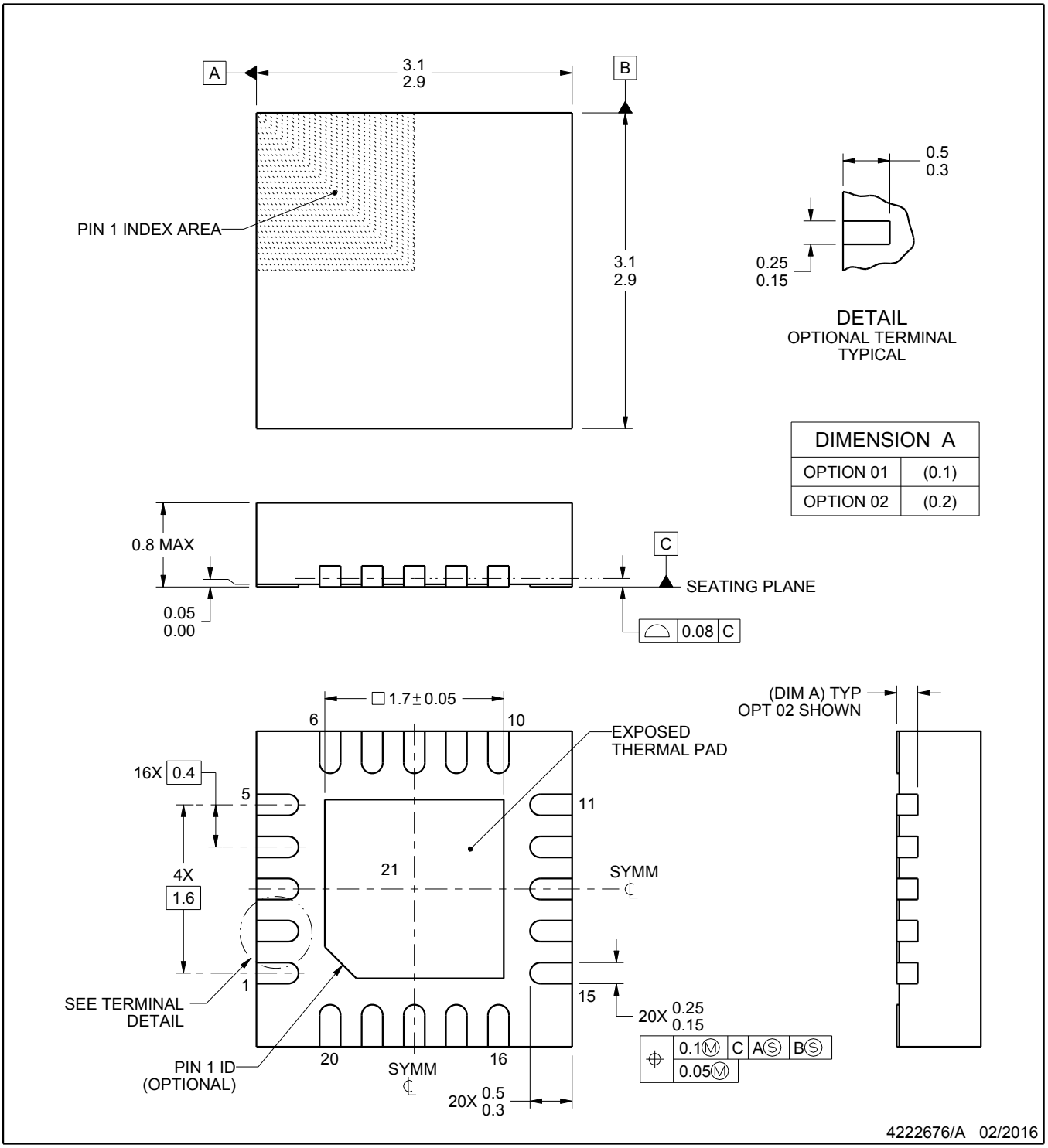

NOTES:

1. All linear dimensions are in millimeters. Any dimensions in parenthesis are for reference only. Dimensioning and tolerancing per ASME Y14.5M.
2. This drawing is subject to change without notice.
3. The package thermal pad must be soldered to the printed circuit board for thermal and mechanical performance.

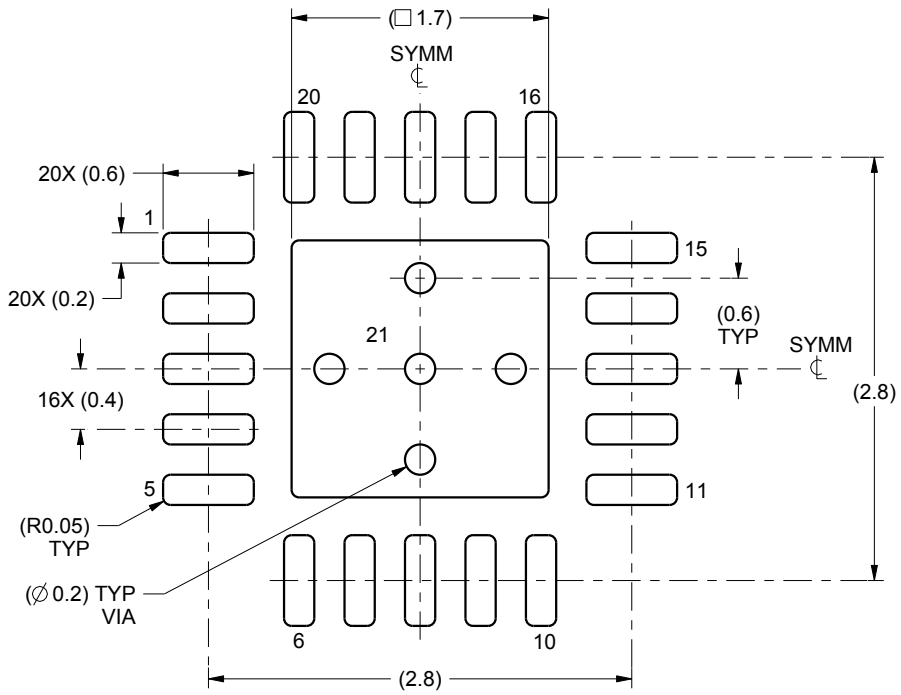

LAND PATTERN EXAMPLE
SCALE:20X

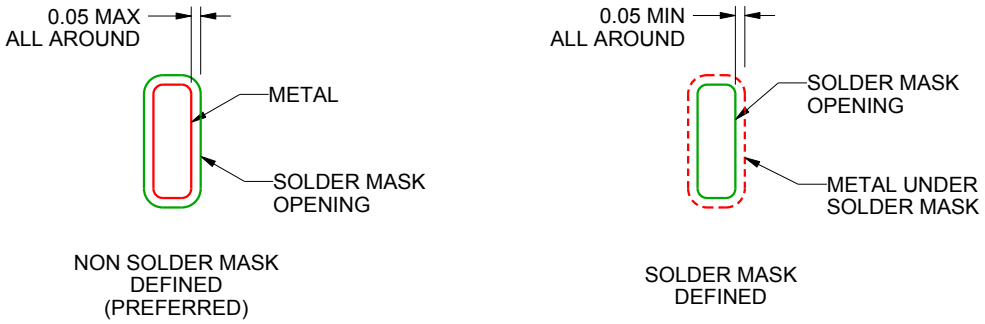

SOLDER MASK DETAILS

4222676/A 02/2016

NOTES: (continued)

4. This package is designed to be soldered to a thermal pad on the board. For more information, see Texas Instruments literature number SLUA271 (www.ti.com/lit/slua271).
5. Vias are optional depending on application, refer to device data sheet. If any vias are implemented, refer to their locations shown on this view. It is recommended that vias under paste be filled, plugged or tented.

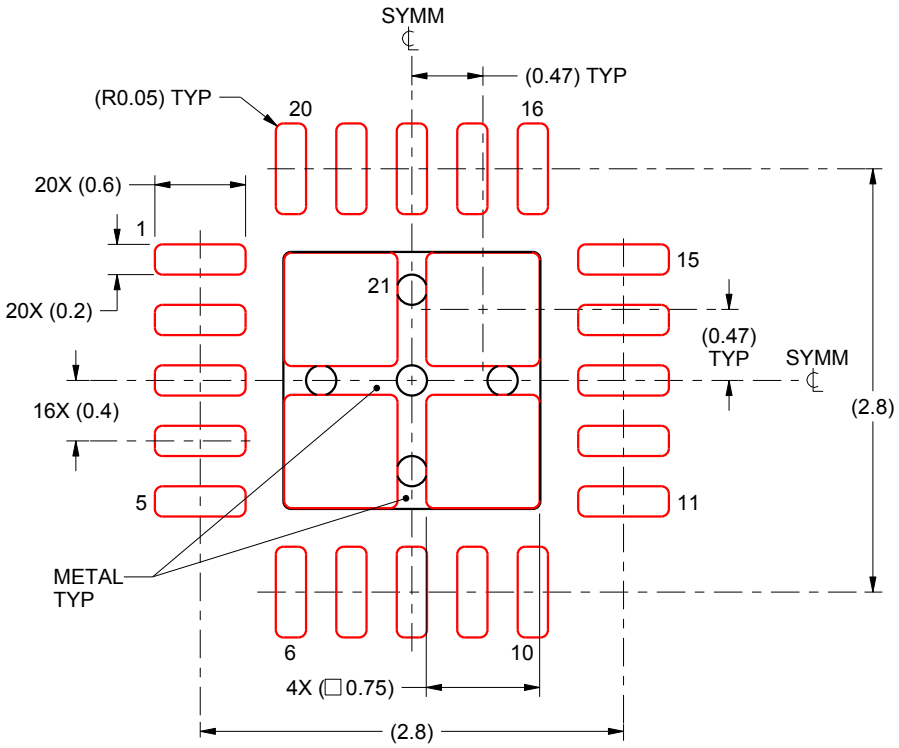

SOLDER PASTE EXAMPLE
BASED ON 0.1 mm THICK STENCIL

EXPOSED PAD 21:
78% PRINTED SOLDER COVERAGE BY AREA UNDER PACKAGE
SCALE:20X

4222676/A 02/2016

NOTES: (continued)

6. Laser cutting apertures with trapezoidal walls and rounded corners may offer better paste release. IPC-7525 may have alternate design recommendations.

重要通知和免责声明

TI“按原样”提供技术和可靠性数据（包括数据表）、设计资源（包括参考设计）、应用或其他设计建议、网络工具、安全信息和其他资源，不保证没有瑕疵且不做出任何明示或暗示的担保，包括但不限于对适销性、与某特定用途的适用性或不侵犯任何第三方知识产权的暗示担保。

这些资源可供使用 TI 产品进行设计的熟练开发人员使用。您将自行承担以下全部责任：(1) 针对您的应用选择合适的 TI 产品，(2) 设计、验证并测试您的应用，(3) 确保您的应用满足相应标准以及任何其他安全、安保法规或其他要求。

这些资源如有变更，恕不另行通知。TI 授权您仅可将这些资源用于研发本资源所述的 TI 产品的相关应用。严禁以其他方式对这些资源进行复制或展示。您无权使用任何其他 TI 知识产权或任何第三方知识产权。对于因您对这些资源的使用而对 TI 及其代表造成的任何索赔、损害、成本、损失和债务，您将全额赔偿，TI 对此概不负责。

TI 提供的产品受 TI 销售条款)、TI 通用质量指南 或 ti.com 上其他适用条款或 TI 产品随附的其他适用条款的约束。TI 提供这些资源并不会扩展或以其他方式更改 TI 针对 TI 产品发布的适用的担保或担保免责声明。 除非德州仪器 (TI) 明确将某产品指定为定制产品或客户特定产品，否则其产品均为按确定价格收入目录的标准通用器件。

TI 反对并拒绝您可能提出的任何其他或不同的条款。

版权所有 © 2026，德州仪器 (TI) 公司

最后更新日期：2025 年 10 月