TPS7A80 低噪声、高带宽、高 PSRR、低压降 1A 线性稳压器

1 特性

- 具有使能功能的低压降 1A 稳压器
- 可调节输出电压：0.8V 至 6V
- 固定输出电压：0.8V 至 6V
- 宽带宽高 PSRR：
  - 1kHz 时为 63dB
  - 100kHz 时为 57dB
  - 1MHz 时为 38dB
- 低噪音：(14 × V_{OUT}) μV_{RMS} 典型值（100Hz 至 100kHz）
- 与 4.7µF 陶瓷电容器一起工作时保持稳定
- 出色的负载/线路瞬态响应
- 总体精度 3%（在负载/线路/温度范围内）
- 过流和过热保护
- 极低压降：1A 时的典型值为 170mV
- 3mm × 3mm VSON-8 DRB 封装

2 应用

- 电信基础设施
- 音频
- 高速接口(I/F)(锁相环路(PLL)/压控振荡器(VCO))

3 说明

TPS7A80 系列低压降线性稳压器 (LDO) 在输出端提供极高的电源纹波抑制 (PSRR)。该 LDO 系列器件采用先进的 BiCMOS 工艺和 PMOSFET 导通器件，从而实现极低噪声、出色的瞬态响应和卓越的 PSRR 性能。

TPS7A80 系列与 4.7µF 陶瓷输出电容器一起工作时保持稳定，并使用一个精确电压基准和反馈环路，从而在所有负载、线路、过程和温度变化范围内，即使在最坏的情况下，也能实现 3% 的精度。

该系列器件的额定工作温度范围 T_J = –40°C 至 +125°C，并采用装有散热焊盘的 3mm × 3mm VSON-8 封装。

器件信息(1)

器件型号	封装	封装尺寸（标称值）
TPS7A80	VSON (8)	3.00mm × 3.00mm

(1) 如需了解所有可用封装，请参阅数据表末尾的封装选项附录。

典型应用图

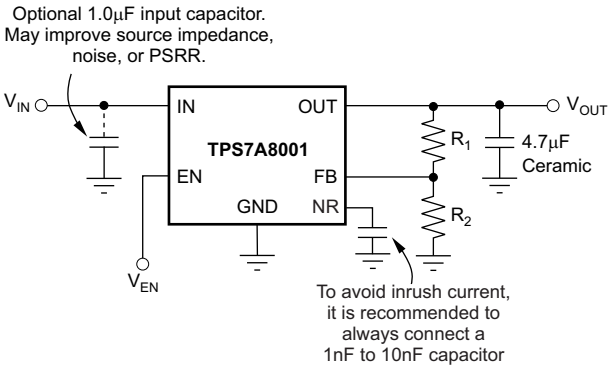

目录

1 特性 ... 1
2 应用 ... 1
3 说明 ... 1
4 修订历史记录 ... 2
5 **Pin Configuration and Functions** ... 4
6 **Specifications** ... 5
6.1 Absolute Maximum Ratings ... 5
6.2 ESD Ratings ... 5
6.3 Recommended Operating Conditions ... 5
6.4 Thermal Information ... 5
6.5 Electrical Characteristics ... 6
6.6 Typical Characteristics ... 7
7 **Detailed Description** ... 12
7.1 Overview ... 12
7.2 Functional Block Diagram ... 12
7.3 Feature Description ... 13
7.4 Device Functional Modes ... 14
8 **Application and Implementation** ... 15
8.1 Application Information ... 15
8.2 Typical Application ... 15
9 **Power Supply Recommendations** ... 18
10 **Layout** ... 18
10.1 Layout Guidelines ... 18
10.2 Layout Example ... 21
11 器件和文档支持 ... 22
11.1 文档支持 ... 22
11.2 接收文档更新通知 ... 22
11.3 社区资源 ... 22
11.4 商标 ... 22
11.5 静电放电警告 ... 22
11.6 Glossary ... 22
12 机械、封装和可订购信息 ... 22

4 修订历史记录

注：之前版本的页码可能与当前版本有所不同。

Changes from Revision I (August 2015) to Revision J — **Page**

- 已添加 向数据表添加了新固定电压器件及相关内容 ... 1
- 已更改 将器件名称更改成了通用器件号以显示新固定电压器件选件 ... 1
- Added SNS pin and description to *Pin Functions* table ... 4
- Changed T_A to T_J in *Recommended Operating Conditions* table ... 5
- Added fixed-voltage-version values to *Electrical Characteristics* table ... 6
- Added test conditions to V_{NR} parameter in *Electrical Characteristics* table ... 6
- Added new note (3) to output accuracy parameter in *Electrical Characteristics* table ... 6
- Deleted typical value for I_{SHDN} in *Electrical Characteristics* table ... 6

Changes from Revision H (January 2013) to Revision I — **Page**

- 已添加 *ESD 额定值* 表、*特性* *说明* 部分、*器件功能模式*、*应用和实施部分*、*电源相关建议* 部分、*布局* 部分、*器件和文档支持* 部分以及*机械、封装和可订购信息* 部分 ... 1
- 已删除 删除了“特性”中的“使用创新型工厂 EEPROM 编程的固定输出电压：0.8V 至 5V”*一项* ... 1
- 已更改 将“低噪声”项目符号中的“12.6”更改成了“14” ... 1
- Deleted SNS row from *Pin Functions* table ... 4
- Deleted fixed version from V_{OUT} row in *Electrical Characteristics* ... 6
- Deleted ISNS row from *Electrical Characteristics* ... 6

Changes from Revision G (April 2012) to Revision H — **Page**

- Updated Figure 8 ... 7

Changes from Revision F (March 2012) to Revision G — **Page**

- Changed Thermal Information table values, added new footnote 2, changed footnote 3 ... 5

版权 © 2010–2018, Texas Instruments Incorporated

Changes from Revision E (February 2012) to Revision F **Page**

- 已更改 *低噪声* 特性 项目符号 1
- Updated Equation 3 17

Changes from Revision D (December 2010) to Revision E **Page**

- 已更改 *低噪声* 特性 项目符号 1
- 已更改 更改了首页应用电路的文字说明 1
- Updated Figure 12 7
- Updated Figure 26 10
- Added Equation 1 note in *Start-up* section 14
- Updated Equation 3 17

Changes from Revision C (September, 2010) to Revision D **Page**

- 使用新特性图更新了首页图片 1
- Revised Figure 17 8
- Changed Figure 18 8

Changes from Revision B (August, 2010) to Revision C **Page**

- 已更改 更改了数据表标题 1
- 已更改 将*特性* 列表中的*超高 PSRR* 更改成了*宽带宽高 PSRR* 1
- Corrected typos in Figure 21 through Figure 23 9
- Revised first paragraph of *Application Information* to remove phrase *ultra-wide bandwidth* 15

Copyright © 2010–2018, Texas Instruments Incorporated

5 Pin Configuration and Functions

DRB Package
8-Pin VSON
Top View

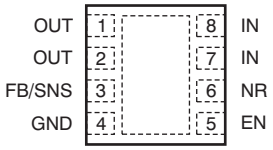

Pin Functions

PIN		I/O	DESCRIPTION
NAME	NO.		
EN	5	I	Driving the enable pin (EN) high turns on the regulator. Driving this pin low puts the regulator into shutdown mode. Refer to *Shutdown* in the *Application and Implementation* section for more details. EN must not be left floating and can be connected to IN if not used.
FB/SNS	3	I	FB (adjustable version only): This pin is the input to the control loop error amplifier and is used to set the output voltage of the device. SNS (fixed versions only): Output voltage sense pin.(1)
GND	4, pad	—	Ground.
IN	7, 8	I	Unregulated input supply.
OUT	1, 2	O	Regulator output. A 4.7-μF or larger capacitor of any type is required for stability.
NR	6	—	Connect an external capacitor between this pin and ground to reduce output noise to very low levels. Also, the capacitor slows down the V_{OUT} ramp (RC softstart).

(1) In order to minimize the trace resistive drop, connect the SNS pin close to the load, and make sure that the trace inductance to the load is also minimized.

Copyright © 2010–2018, Texas Instruments Incorporated

6 Specifications

6.1 Absolute Maximum Ratings

over operating free-air temperature range (unless otherwise noted)(1)

		MIN	MAX	UNIT
Voltage	IN	–0.3	7	V
	FB, NR	–0.3	3.6	
	EN	–0.3	V_{IN} + 0.3(2)	
	OUT	–0.3	7	
Current	OUT	Internally Limited		A
Temperature	Operating virtual junction, T_J	–55	150	°C
	Operating free air temperature, T_A	–40	125	
	Storage, T_{stg}	–55	150	

(1) Stresses beyond those listed under *Absolute Maximum Ratings* may cause permanent damage to the device. These are stress ratings only, which do not imply functional operation of the device at these or any other conditions beyond those indicated under *Recommended Operating Conditions*. Exposure to absolute-maximum-rated conditions for extended periods may affect device reliability.
(2) V_{EN} absolute maximum rating is V_{IN} + 0.3 V or 7 V, whichever is smaller.

6.2 ESD Ratings

			VALUE	UNIT
$V_{(ESD)}$	Electrostatic discharge	Human body model (HBM), per ANSI/ESDA/JEDEC JS-001, all pins(1)	±2000	V
		Charged device model (CDM), per JEDEC specification JESD22-C101, all pins(2)	±500	

(1) JEDEC document JEP155 states that 500-V HBM allows safe manufacturing with a standard ESD control process.
(2) JEDEC document JEP157 states that 250-V CDM allows safe manufacturing with a standard ESD control process.

6.3 Recommended Operating Conditions

over operating free-air temperature range (unless otherwise noted)

		MIN	MAX	UNIT
V_{IN}	Input voltage(1)	2.2	6.5	V
I_{OUT}	Output current	0	1	A
T_J	Operating junction temperature	–40	125	°C
T_A	Operating free air temperature	–40	125	°C

(1) Minimum $V_{IN} = V_{OUT} + V_{DO}$ or 2.2 V, whichever is greater.

6.4 Thermal Information

THERMAL METRIC(1)(2)		TPS7A80 DRB (VSON)(3) 8 PINS	UNIT
$R_{\theta JA}$	Junction-to-ambient thermal resistance	47.8	°C/W
$R_{\theta JC(top)}$	Junction-to-case (top) thermal resistance	53.9	°C/W
$R_{\theta JB}$	Junction-to-board thermal resistance	23.4	°C/W
ψ_{JT}	Junction-to-top characterization parameter	1	°C/W
ψ_{JB}	Junction-to-board characterization parameter	23.5	°C/W
$R_{\theta JC(bot)}$	Junction-to-case (bottom) thermal resistance	7.4	°C/W

(1) For information about traditional and new thermal metrics, see the *Semiconductor and IC Package Thermal Metrics* application report.
(2) For thermal estimates of this device based on PCB copper area, see the TI PCB Thermal Calculator.
(3) Thermal data for the DRB package are derived by thermal simulations based on JEDEC-standard methodology as specified in the JESD51 series. The following assumptions are used in the simulations:
(a) The exposed pad is connected to the PCB ground layer through a 2 × 2 thermal via array.
(b) The top and bottom copper layers are assumed to have a 5% thermal conductivity of copper representing a 20% copper coverage.
(c) This data were generated with only a single device at the center of a JEDEC high-K (2s2p) board with 3 inches × 3 inches copper area. To understand the effects of the copper area on thermal performance, refer to the *Power Dissipation* and *Estimating Junction Temperature* sections.

Copyright © 2010–2018, Texas Instruments Incorporated

6.5 Electrical Characteristics

At T_J = –40°C to +125°C, V_{IN} = $V_{OUT(TYP)}$ + 0.5 V or 2.2 V (whichever is greater), I_{OUT} = 1 mA, V_{EN} = 2.2 V, C_{OUT} = 4.7 µF, and C_{NR} = 0.01 µF (unless otherwise noted). TPS7A8001 tested at V_{OUT} = 0.8 V and V_{OUT} = 6 V. Typical values are at T_J = 25°C.

PARAMETER		TEST CONDITIONS		MIN	TYP	MAX	UNIT
V_{NR}	Internal reference	Adjustable and Fixed V_{OUT} = 1.2 V		0.79	0.8	0.81	V
		Fixed V_{OUT} ≥ 1.8 V		1.23	1.243	1.26	V
V_{OUT}	Output voltage	Adjustable version only (TPS7A8001)		0.8		6	V
		Fixed versions only		1.2		5	V
	Output accuracy(1)(2)	V_{OUT} + 0.5 V ≤ V_{IN} ≤ 6 V, V_{IN} ≥ 2.5 V, 100 mA ≤ I_{OUT} ≤ 500 mA, 0°C ≤ T_J ≤ 85°C		–2%		2%	
		V_{OUT} + 0.5 V ≤ V_{IN} ≤ 6.5 V, V_{IN} ≥ 2.2 V, 100 mA ≤ I_{OUT} ≤ 1 A		–3%	±0.3%	3%	
$\Delta V_{OUT}/\Delta V_{IN}$	Line regulation	$V_{OUT(NOM)}$ + 0.5 V ≤ V_{IN} ≤ 6.5 V, V_{IN} ≥ 2.2 V, I_{OUT} = 100 mA			150		µV/V
$\Delta V_{OUT}/\Delta I_{OUT}$	Load regulation	100 mA ≤ I_{OUT} ≤ 1 A			2		µV/mA
V_{DO}	Dropout voltage(3)	V_{OUT} + 0.5 V ≤ V_{IN} ≤ 6.5 V, V_{IN} ≥ 2.2 V, I_{OUT} = 500 mA, V_{FB} = GND or V_{SNS} = GND				250	mV
		V_{OUT} + 0.5 V ≤ V_{IN} ≤ 6.5 V, V_{IN} ≥ 2.5 V, I_{OUT} = 750 mA, V_{FB} = GND or V_{SNS} = GND				350	mV
		V_{OUT} + 0.5 V ≤ V_{IN} ≤ 6.5 V, V_{IN} ≥ 2.5 V, I_{OUT} = 1 A, V_{FB} = GND or V_{SNS} = GND				500	mV
I_{CL}	Output current limit	V_{OUT} = 0.85 × $V_{OUT(NOM)}$, V_{IN} ≥ 3.3 V	Adjustable	1100	1400	2000	mA
			Fixed	1100		2000	
I_{GND}	Ground pin current	I_{OUT} = 1 mA, adjustable version only			60	100	µA
		I_{OUT} = 1 mA, fixed versions only				120	µA
		I_{OUT} = 1 A				350	µA
I_{SHDN}	Shutdown current (I_{GND})	V_{EN} ≤ 0.4 V, V_{IN} ≥ 2.2 V, R_L = 1 kΩ, 0°C ≤ T_J ≤ 85°C				2	µA
I_{FB}	Feedback pin current (TPS7A8001)	V_{IN} = 6.5 V, V_{FB} = 0.8 V			0.02	1	µA
PSRR	Power-supply rejection ratio	V_{IN} = 4.3 V, V_{OUT} = 3.3 V, I_{OUT} = 750 mA	f = 100 Hz		48		dB
			f = 1 kHz		63		dB
			f = 10 kHz		63		dB
			f = 100 kHz		57		dB
			f = 1 MHz		38		dB
V_N	Output noise voltage	BW = 100 Hz to 100 kHz, V_{IN} = 4.3 V, V_{OUT} = 3.3 V, I_{OUT} = 100 mA	C_{NR} = 0.001 µF		14.6 × V_{OUT}		μV_{RMS}
			C_{NR} = 0.01 µF		14.3 × V_{OUT}		μV_{RMS}
			C_{NR} = 0.1µF		13.9 × V_{OUT}		μV_{RMS}
$V_{EN(HI)}$	Enable high (enabled)	2.2 V ≤ V_{IN} ≤ 3.6 V, R_L = 1 kΩ		1.2			V
		3.6 V < V_{IN} ≤ 6.5 V, R_L = 1 kΩ		1.35			V
$V_{EN(LO)}$	Enable low (shutdown)	R_L = 1 kΩ		0		0.4	V
$I_{EN(HI)}$	Enable pin current, enabled	V_{IN} = V_{EN} = 6.5 V			0.02	1	µA
t_{STR}	Start-up time	$V_{OUT(NOM)}$ = 3.3 V, V_{OUT} = 0%–90% $V_{OUT(NOM)}$, R_L = 3.3 kΩ, C_{OUT} = 4.7 µF	C_{NR} = 1 nF		0.1		ms
			C_{NR} = 10 nF		1.6		ms
UVLO	Undervoltage lockout	V_{IN} rising, R_L = 1 kΩ		1.86	2	2.10	V
	UVLO hysteresis	V_{IN} falling, R_L = 1 kΩ			75		mV
T_{SD}	Thermal shutdown temperature	Shutdown, temperature increasing			160		°C
		Reset, temperature decreasing			140		°C

(1) The TPS7A8001 (adjustable) does not include external resistor tolerances and is not tested at these conditions: V_{OUT} = 0.8 V, 4.5 V ≤ V_{IN} ≤ 6.5 V, and 750 mA ≤ I_{OUT} ≤ 1 A because power dissipation is higher than maximum rating of the package.
(2) The TPS7A8012, TPS7A8018, and TPS7A8033 are not tested at these conditions: 4.5 V ≤ V_{IN} ≤ 6.5 V, and 750 mA ≤ I_{OUT} ≤ 1 A because power dissipation is higher than maximum rating of the package.
(3) V_{DO} is not measured for fixed output voltage devices with VOUT < 1.7 V because minimum V_{IN} = 2.2 V.

Copyright © 2010–2018, Texas Instruments Incorporated

6.6 Typical Characteristics

At $V_{OUT(TYP)}$ = 3.3 V, V_{IN} = $V_{OUT(TYP)}$ + 0.5 V or 2.2 V (whichever is greater), I_{OUT} = 100 mA, V_{EN} = V_{IN}, C_{IN} = 1 µF, C_{OUT} = 4.7 µF, and C_{NR} = 0.01 µF, all temperature values refer to T_J (unless otherwise noted).

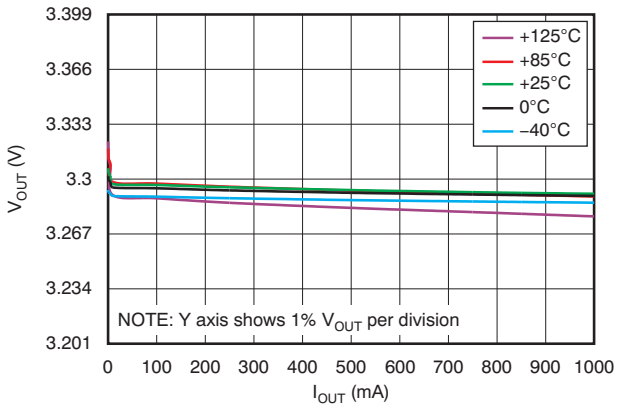

Figure 1. Load Regulation

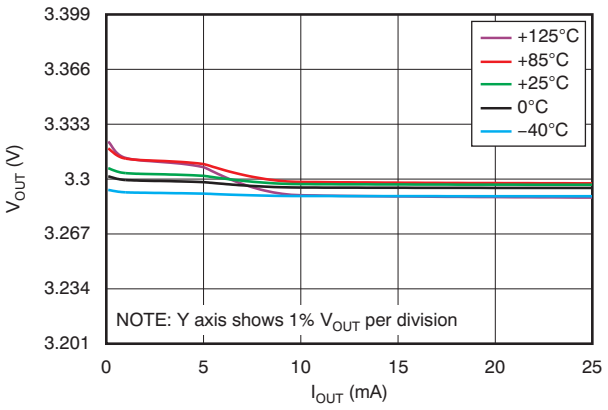

Figure 2. Load Regulation Under Light Loads

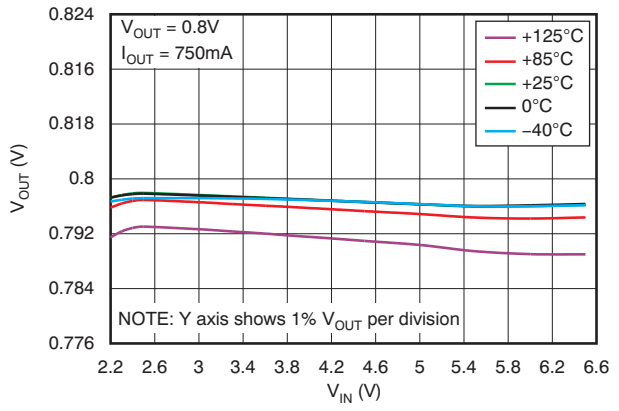

Figure 3. Line Regulation

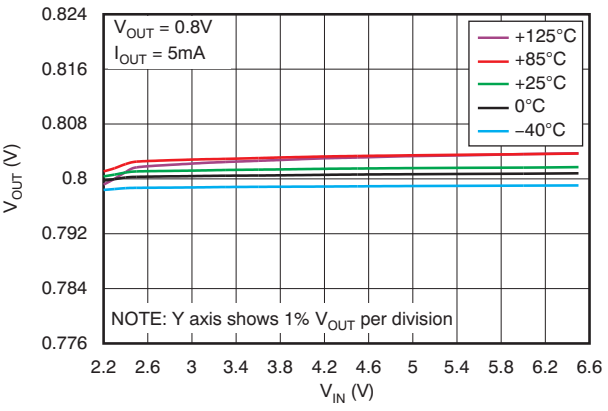

Figure 4. Line Regulation Under Light Loads

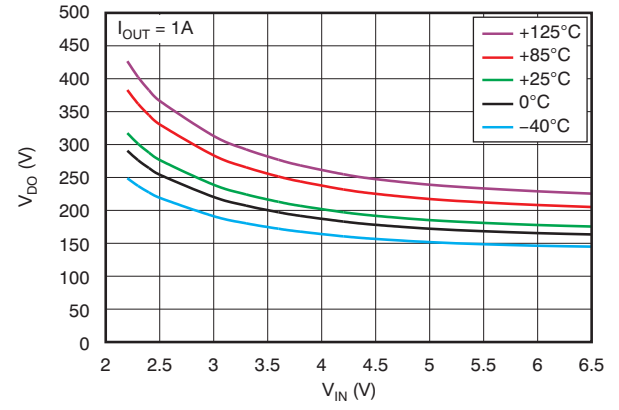

Figure 5. Dropout Voltage vs Input Voltage

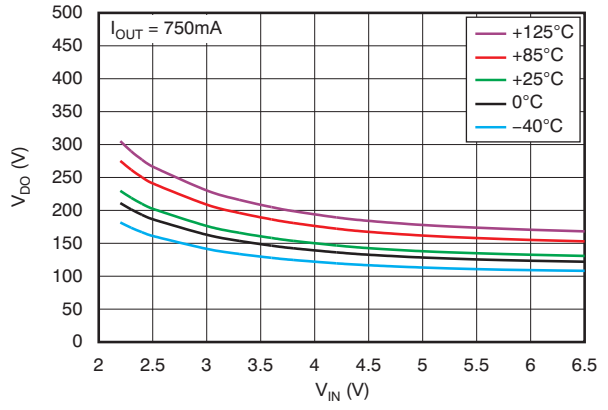

Figure 6. Dropout Voltage vs Input Voltage

Copyright © 2010–2018, Texas Instruments Incorporated

Typical Characteristics (continued)

At $V_{OUT(TYP)}$ = 3.3 V, V_{IN} = $V_{OUT(TYP)}$ + 0.5 V or 2.2 V (whichever is greater), I_{OUT} = 100 mA, V_{EN} = V_{IN}, C_{IN} = 1 µF, C_{OUT} = 4.7 µF, and C_{NR} = 0.01 µF, all temperature values refer to T_J (unless otherwise noted).

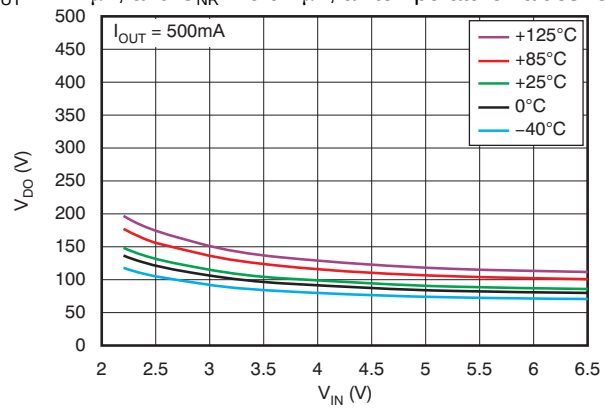

Figure 7. Dropout Voltage vs Input Voltage

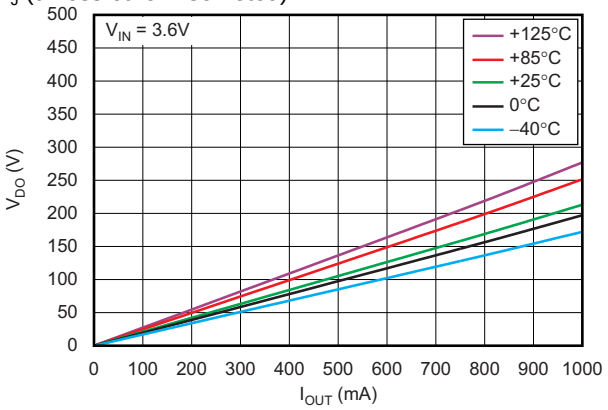

Figure 8. Dropout Voltage vs Load Current

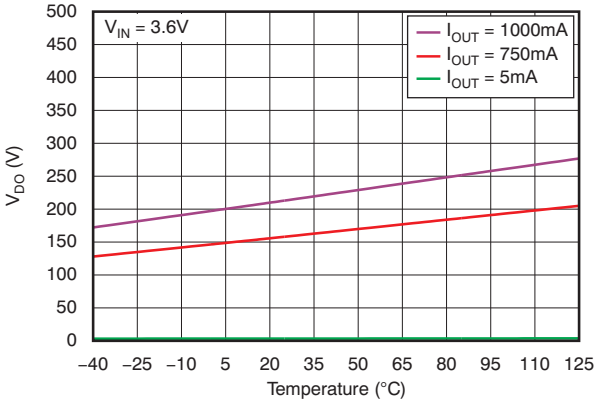

Figure 9. Dropout Voltage vs Temperature

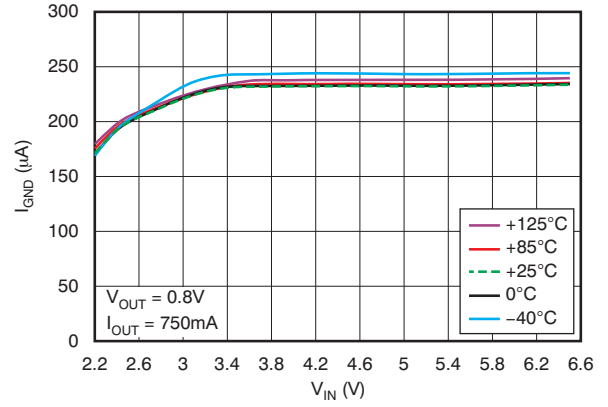

Figure 10. Ground Pin Current vs Input Voltage

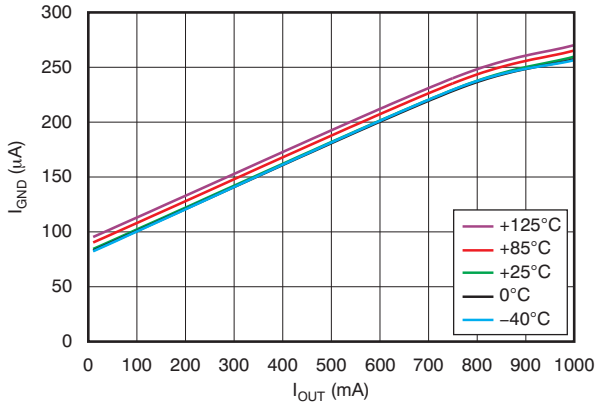

Figure 11. Ground Pin Current vs Load Current

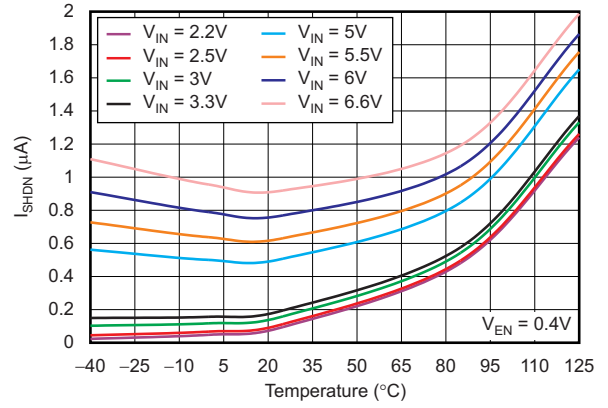

Figure 12. Shutdown Current vs Temperature

Copyright © 2010–2018, Texas Instruments Incorporated

Typical Characteristics (continued)

At $V_{OUT(TYP)}$ = 3.3 V, V_{IN} = $V_{OUT(TYP)}$ + 0.5 V or 2.2 V (whichever is greater), I_{OUT} = 100 mA, V_{EN} = V_{IN}, C_{IN} = 1 µF, C_{OUT} = 4.7 µF, and C_{NR} = 0.01 µF, all temperature values refer to T_J (unless otherwise noted).

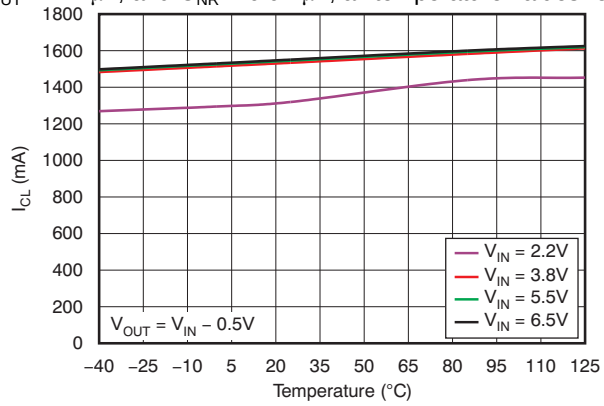

Figure 13. Current Limit vs Temperature

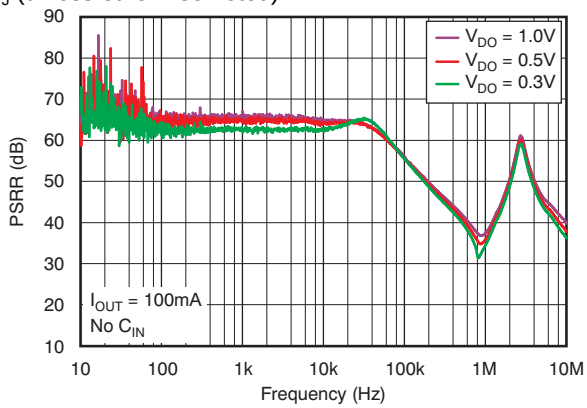

Figure 14. Power-Supply Ripple Rejection vs Frequency

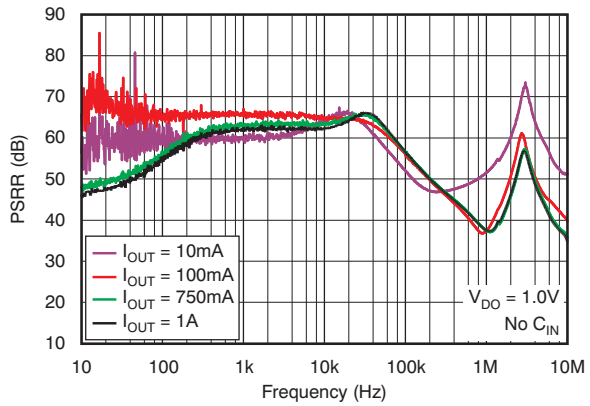

Figure 15. Power-Supply Ripple Rejection vs Frequency

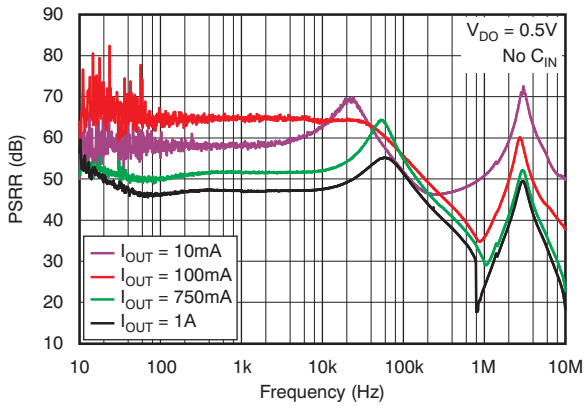

Figure 16. Power-Supply Ripple Rejection vs Frequency

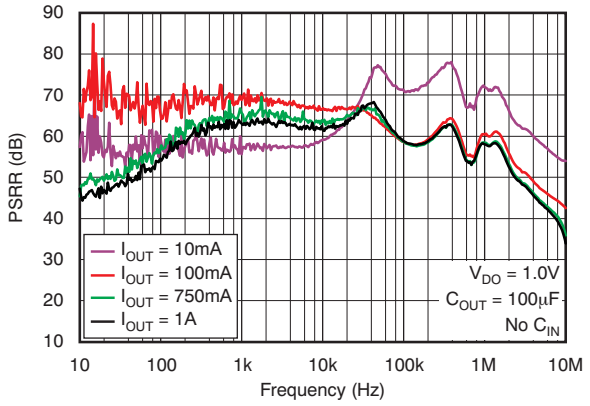

Figure 17. Power-Supply Ripple Rejection vs Frequency

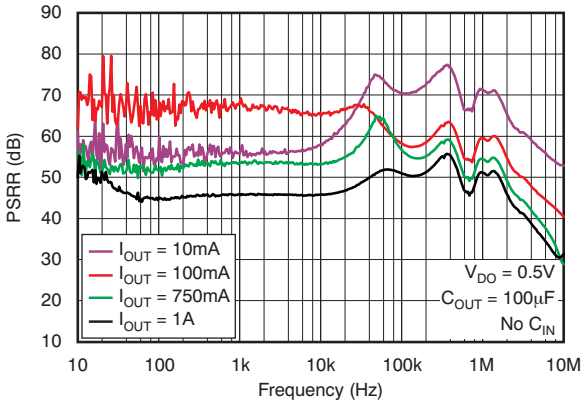

Figure 18. Power-Supply Ripple Rejection vs Frequency

Typical Characteristics (continued)

At $V_{OUT(TYP)}$ = 3.3 V, V_{IN} = $V_{OUT(TYP)}$ + 0.5 V or 2.2 V (whichever is greater), I_{OUT} = 100 mA, V_{EN} = V_{IN}, C_{IN} = 1 µF, C_{OUT} = 4.7 µF, and C_{NR} = 0.01 µF, all temperature values refer to T_J (unless otherwise noted).

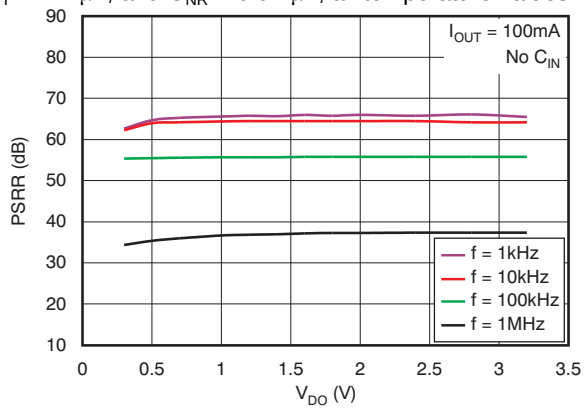

Figure 19. Power-Supply Ripple Rejection vs Dropout Voltage

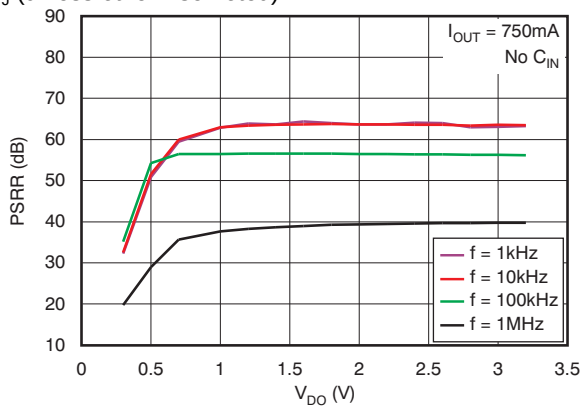

Figure 20. Power-Supply Ripple Rejection vs Dropout Voltage

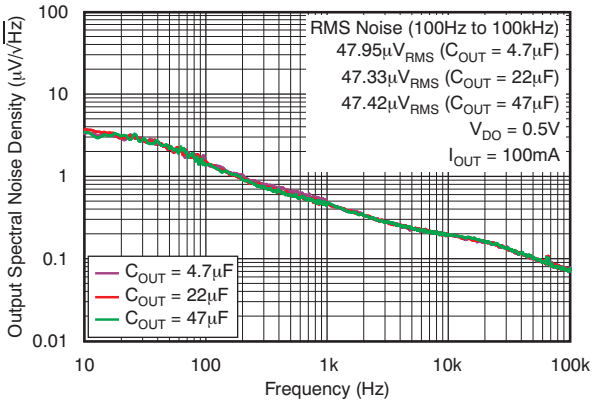

Figure 21. Output Spectral Noise Density vs Frequency

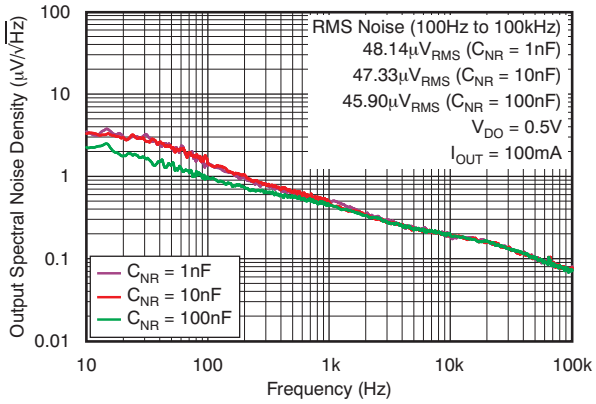

Figure 22. Output Spectral Noise Density vs Frequency

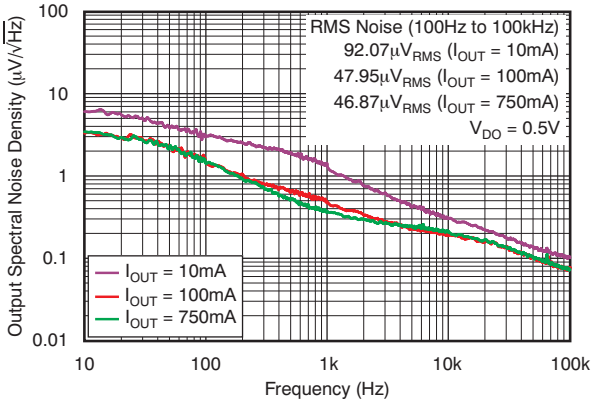

Figure 23. Output Spectral Noise Density vs Frequency

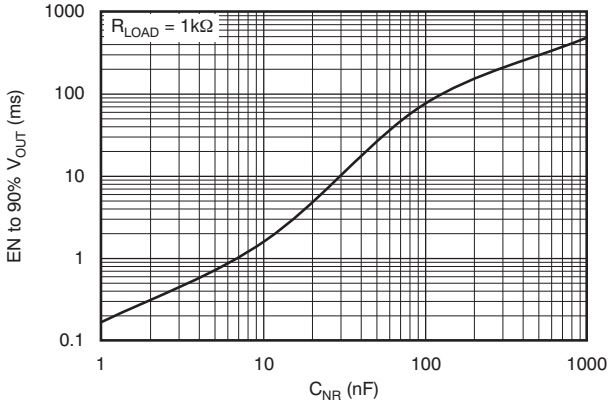

Figure 24. Start-Up Time vs Noise Reduction Capacitance

Copyright © 2010–2018, Texas Instruments Incorporated

Typical Characteristics (continued)

At $V_{OUT(TYP)}$ = 3.3 V, V_{IN} = $V_{OUT(TYP)}$ + 0.5 V or 2.2 V (whichever is greater), I_{OUT} = 100 mA, V_{EN} = V_{IN}, C_{IN} = 1 µF, C_{OUT} = 4.7 µF, and C_{NR} = 0.01 µF, all temperature values refer to T_J (unless otherwise noted).

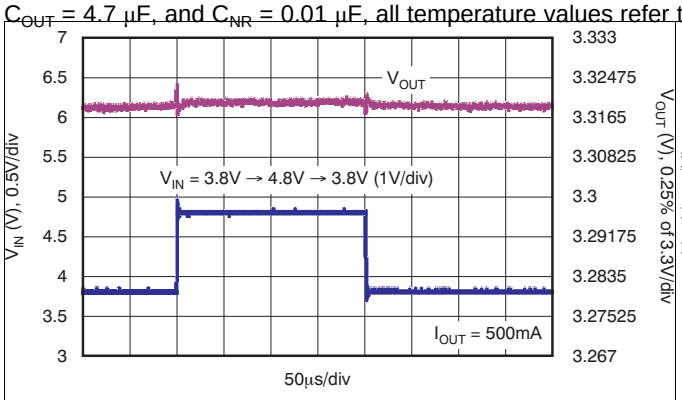

Figure 25. Line Transient Response

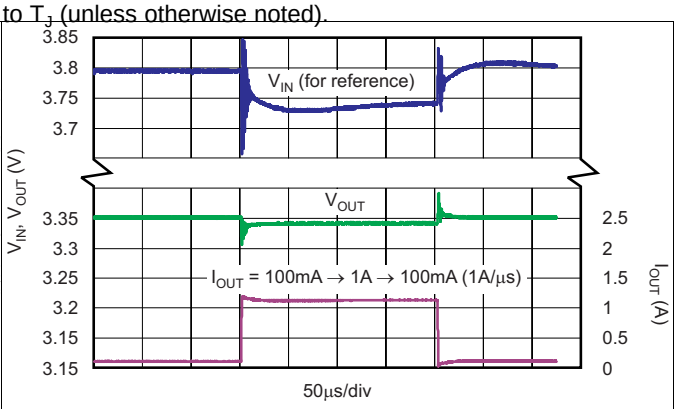

Figure 26. Load Transient Response

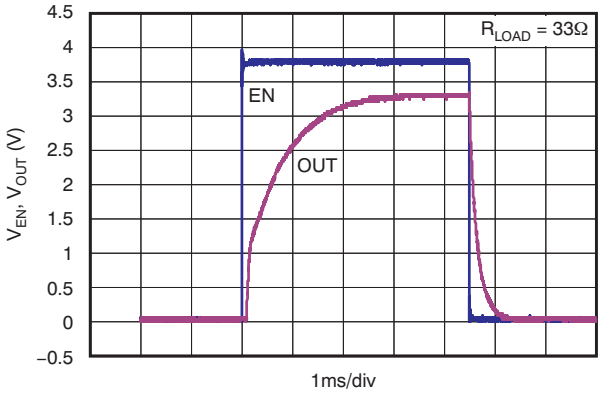

Figure 27. Enable Pulse Response

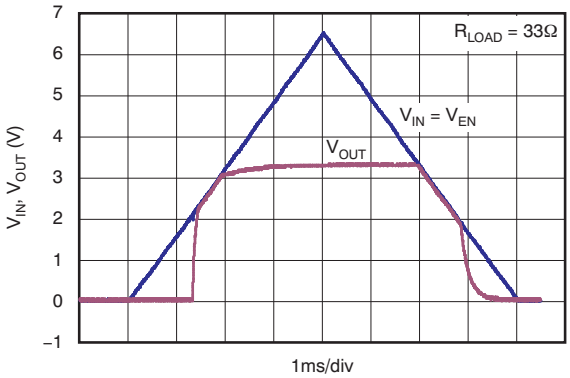

The internal reference requires approximately 2 ms of rampup time (see *Start-Up*); therefore, V_{OUT} fully reaches the target output voltage of 3.3 V in 2 ms from start-up.

Figure 28. Power-Up and Power-Down Response

7 Detailed Description

7.1 Overview

The TPS7A80 devices belong to a family of new-generation LDO regulators that uses innovative circuitry to achieve wide bandwidth and high loop gain, resulting in extremely high PSRR (over a 1-MHz range), even with very low headroom (V_{IN} – V_{OUT}). A noise-reduction capacitor (C_{NR}) at the NR pin and a bypass capacitor (C_{BYPASS}) decrease noise generated by the band-gap reference to improve PSRR, while a quick-start circuit fastcharges the noise-reduction capacitor. This family of regulators offers sub-band-gap output voltages, current limit, and thermal protection, and is fully specified from –40°C to +125°C.

7.2 Functional Block Diagram

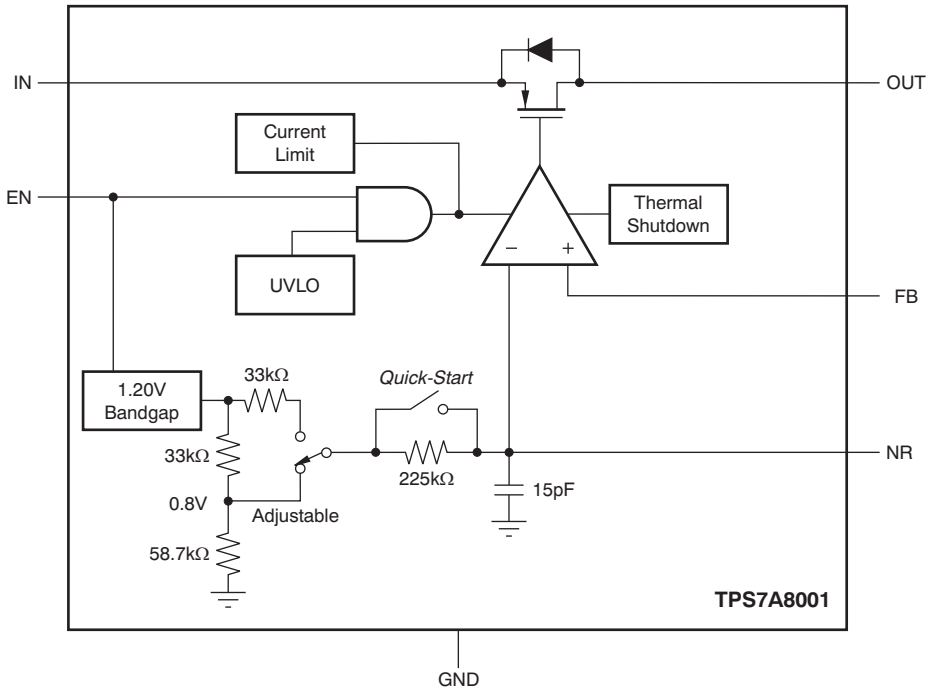

Figure 29. Adjustable Voltage Version

Copyright © 2010–2018, Texas Instruments Incorporated

Functional Block Diagram (continued)

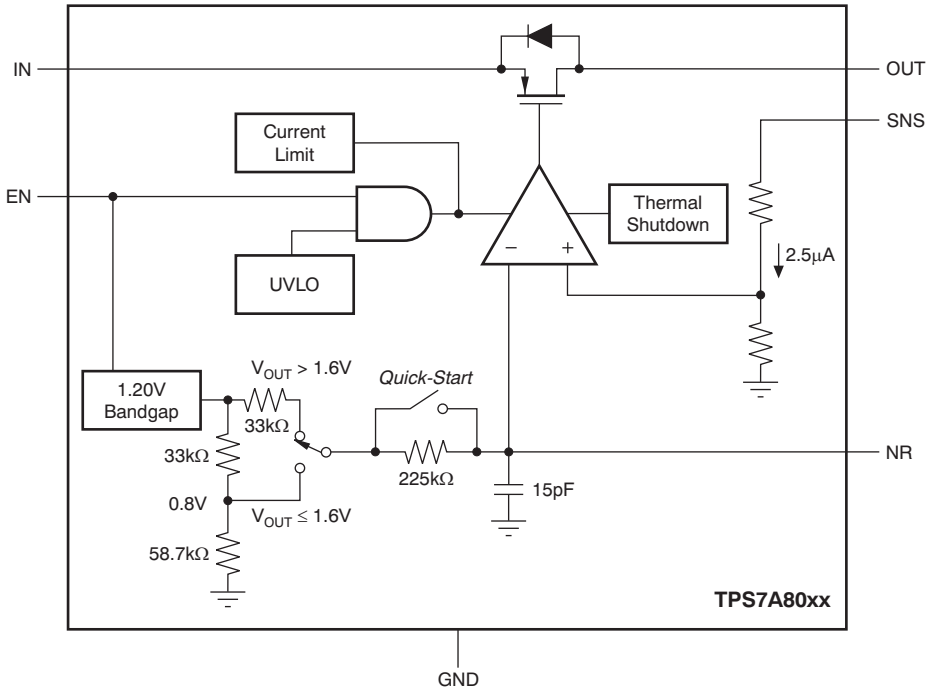

Figure 30. Fixed Voltage Versions

7.3 Feature Description

7.3.1 Internal Current Limit

The TPS7A80 internal current limit helps protect the regulator during fault conditions. During current limit, the output sources a fixed amount of current that is largely independent of output voltage. For reliable operation, do not operate these devices in a current limit state for extended periods of time.

The PMOS pass element in the TPS7A80 has a built-in body diode that conducts current when the voltage at OUT exceeds the voltage at IN. This current is not limited, so if extended reverse voltage operation is anticipated, external limiting is required.

7.3.2 Shutdown

The enable pin (EN) is active high and is compatible with standard and low voltage, TTL-CMOS levels. When shutdown capability is not required, EN can be connected to IN.

Copyright © 2010–2018, Texas Instruments Incorporated

Feature Description (continued)

7.3.3 Start-Up

Through a lower resistance, the band-gap reference can quickly charge the noise reduction capacitor (C_{NR}). The TPS7A80 have a *quick-start* circuit to quickly charge C_{NR}, if present; see the *Functional Block Diagram*. At start-up, this quick-start switch is closed, with only 33 kΩ of resistance between the band-gap reference and the NR pin. The quick-start switch opens approximately 2ms after any device enabling event, and the resistance between the band-gap reference and the NR pin becomes higher in value (approximately 250 kΩ) to form a very good low-pass (RC) filter. This low-pass filter achieves very good noise reduction for the reference voltage.

Inrush current can be a problem in many applications. The 33-kΩ resistance during the start-up period is intentionally put there to slow down the reference voltage ramp up, thus reducing the inrush current. For example, the capacitance of connecting the recommended C_{NR} value of 0.01 µF along with the 33-kΩ resistance causes approximately 1-ms RC delay. Start-up time with the other C_{NR} values can be calculated as Equation 1:

$$t_{STR}\ (s) = 76{,}000 \times C_{NR}\ (F) \quad (1)$$

Equation 1 is valid up to t_{STR} = 2 ms or C_{NR} = 26 nF, whichever is smaller.

Although the noise reduction effect is nearly saturated at 0.01 µF, connecting a C_{NR} value greater than 0.01 µF can help reduce noise slightly more; however, start-up time will be extremely long because the quick-start switch opens after approximately 2 ms. That is, if C_{NR} is not fully charged during this 2 ms period, C_{NR} finishes charging through a higher resistance of 250 kΩ, and takes much longer to fully charge.

A low leakage C_{NR} should be used; most ceramic capacitors are suitable.

7.3.4 Undervoltage Lockout (UVLO)

The TPS7A80 use an undervoltage lockout circuit to keep the output shut off until the internal circuitry is operating properly. The UVLO circuit has a deglitch feature so that it typically ignores undershoot transients on the input if they are less than 50-µs duration.

7.4 Device Functional Modes

Driving the EN pin over 1.2 V for V_{IN} from 2.2 V to 3.6 V or 1.35 V for V_{IN} from 3.6 V to 6.5 V turns on the regulator. Driving the EN pin below 0.4 V causes the regulator to enter shutdown mode.

In shutdown, the current consumption of the device is reduced to 0.02 µA, typically.

Copyright © 2010–2018, Texas Instruments Incorporated

8 Application and Implementation

NOTE

Information in the following applications sections is not part of the TI component specification, and TI does not warrant its accuracy or completeness. TI's customers are responsible for determining suitability of components for their purposes. Customers should validate and test their design implementation to confirm system functionality.

8.1 Application Information

The TPS7A80 devices belong to a family of new generation LDO regulators that use innovative circuitry to achieve wide bandwidth and high loop gain, resulting in extremely high PSRR (over a 1-MHz range) at very low headroom (V_{IN} – V_{OUT}). A noise reduction capacitor (C_{NR}) at the NR pin bypasses noise generated by the band-gap reference to improve PSRR, while a quick-start circuit fast-charges this capacitor. This family of regulators offers sub-band-gap output voltages, current limit, and thermal protection, and is fully specified from –40°C to 125°C.

Figure 31 gives the connections for the adjustable-output version (TPS7A8001). Figure 32 shows the connections for the fixed-voltage versions.

8.2 Typical Application

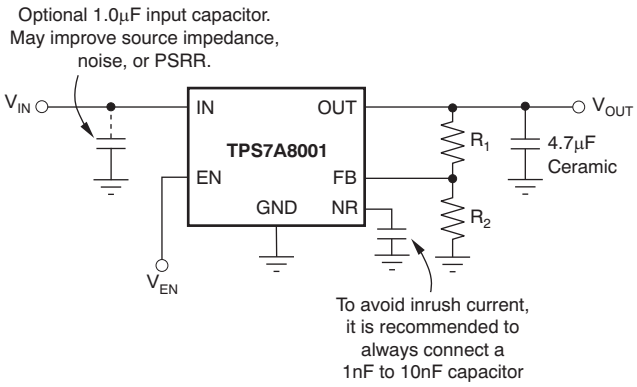

Figure 31. Typical Application Circuit: Adjustable-Voltage Version

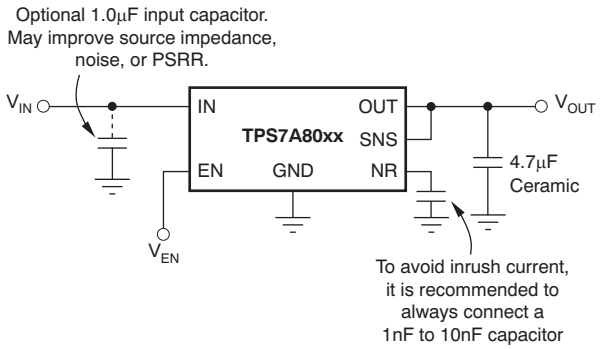

Figure 32. Typical Application Circuit: Fixed-Voltage Versions

Copyright © 2010–2018, Texas Instruments Incorporated

Typical Application (continued)

8.2.1 Design Requirements

8.2.1.1 Dropout Voltage

The TPS7A80 use a PMOS pass transistor to achieve low dropout. When (V_{IN} – V_{OUT}) is less than the dropout voltage (V_{DO}), the PMOS pass device is in its linear region of operation and the input-to-output resistance is the $R_{DS(ON)}$ of the PMOS pass element. V_{DO} scales approximately with output current because the PMOS device in dropout behaves the same way as a resistor.

As with any linear regulator, PSRR and transient response are degraded as (V_{IN} – V_{OUT}) approaches dropout. This effect is shown in Figure 19 and Figure 20 in the *Typical Characteristics* section.

8.2.1.2 Minimum Load

The TPS7A80 are stable and well-behaved with no output load. Traditional PMOS LDO regulators suffer from lower loop gain at very light output loads. The TPS7A80 employ an innovative low-current mode circuit to increase loop gain under very light or no-load conditions, resulting in improved output voltage regulation performance down to zero output current.

8.2.1.3 Input and Output Capacitor Requirements

Although an input capacitor is not required for stability, it is good analog design practice to connect a 0.1-μF to 1-μF low equivalent series resistance (ESR) capacitor across the input supply near the regulator. This capacitor counteracts reactive input sources and improves transient response, noise rejection, and ripple rejection. A higher-value capacitor may be necessary if large, fast rise-time load transients are anticipated or if the device is located several inches from the power source. If source impedance is not sufficiently low, a 0.1-μF input capacitor may be necessary to provide stability.

The TPS7A80 are designed to be stable with standard ceramic capacitors of capacitance values 4.7 μF or larger. These devices is evaluated using a 4.7-μF ceramic capacitor of 10-V rating, 10% tolerance, X5R type, and 0805 size (2 mm × 1.25 mm).

X5R- and X7R-type capacitors are highly recommended because they have minimal variation in value and ESR over temperature. Maximum ESR should be < 1 Ω.

The TPS7A80 implement an innovative internal compensation circuit that does not require a feedback capacitor across R_2 for stability. Do not use a feedback capacitor for this device.

8.2.1.4 Transient Response

As with any regulator, increasing the size of the output capacitor reduces over- and undershoot magnitude, but increases duration of the transient response.

Copyright © 2010–2018, Texas Instruments Incorporated

Typical Application (continued)

8.2.2 Detailed Design Procedure

The voltage on the FB pin sets the output voltage and is determined by the values of R_1 and R_2. The values of R_1 and R_2 can be calculated for any voltage using the formula given in Equation 2:

$$V_{OUT} = \frac{(R_1 + R_2)}{R_2} \times 0.800 \quad (2)$$

Sample resistor values for common output voltages are shown in Table 1. In Table 1, E96 series resistors are used, and all values meet 1% of the target V_{OUT}, assuming resistors with zero error. For the actual design, pay attention to any resistor error factors. Using lower values for R_1 and R_2 reduces the noise injected from the FB pin.

Table 1. Sample 1% Resistor Values for Common Output Voltages

V_{OUT}	R_1	R_2
0.8 V	0 Ω (Short)	Do not populate
1 V	2.49 kΩ	10 kΩ
1.2 V	4.99 kΩ	10 kΩ
1.5 V	8.87 kΩ	10 kΩ
1.8 V	12.5 kΩ	10 kΩ
2.5 V	21 kΩ	10 kΩ
3.3 V	30.9 kΩ	10 kΩ
5 V	52.3 kΩ	10 kΩ

8.2.2.1 Output Noise

In most LDOs, the band gap is the dominant noise source. If a noise reduction capacitor (C_{NR}) is used with the TPS7A80, the band gap does not contribute significantly to noise. Instead, noise is dominated by the output resistor divider and the error amplifier input. To minimize noise in a given application, use a 0.01-µF (minimum) noise-reduction capacitor.

Equation 3 approximates the total noise when C_{NR} = 0.01 µF:

$$V_N = 14.6 \times V_{OUT} + (\mu V_{RMS}) \quad (3)$$

8.2.3 Application Curve

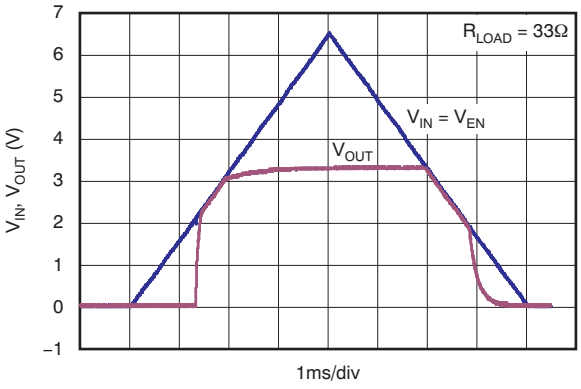

Figure 33. Power-Up and Power-Down Response

9 Power Supply Recommendations

These devices are designed to operate with an input voltage supply range from 2.2 V to 6.5 V. The input voltage range should provide adequate headroom for the device to have a regulated output. Use a well-regulated input supply. If the input supply is noisy, additional input capacitors with low ESR can help improve the output noise performance.

10 Layout

10.1 Layout Guidelines

10.1.1 Board Layout Recommendations to Improve PSRR and Noise Performance

To improve ac performance such as PSRR, output noise, and transient response, TI recommends designing the board with separate ground planes for V_{IN} and V_{OUT}, with each ground plane connected only at the GND pin of the device. In addition, the ground connection for the bypass capacitor should connect directly to the GND pin of the device.

10.1.2 Thermal Considerations

Thermal protection disables the output when the junction temperature rises to approximately 160°C, allowing the device to cool. When the junction temperature cools to approximately 140°C the output circuitry is again enabled. Depending on power dissipation, thermal resistance, and ambient temperature, the thermal protection circuit may cycle on and off. This cycling limits the dissipation of the regulator, protecting it from damage because of overheating.

Any tendency to activate the thermal protection circuit indicates excessive power dissipation or an inadequate heatsink. For reliable operation, junction temperature should be limited to 125°C maximum. To estimate the margin of safety in a complete design (including heatsink), increase the ambient temperature until the thermal protection is triggered; use worst-case loads and signal conditions. For good reliability, thermal protection should trigger at least 35°C above the maximum expected ambient condition of your particular application. This configuration produces a worst-case junction temperature of 125°C at the highest expected ambient temperature and worst-case load.

The internal protection circuitry of the TPS7A80 has been designed to protect against overload conditions. It was not intended to replace proper heatsinking. Continuously running the TPS7A80 into thermal shutdown degrades device reliability.

10.1.3 Power Dissipation

Knowing the device power dissipation and proper sizing of the thermal plane that is connected to the tab or pad is critical to avoiding thermal shutdown and ensuring reliable operation.

Power dissipation of the device depends on input voltage and load conditions and can be calculated using Equation 4:

$$P_D = (V_{IN} - V_{OUT}) \times I_{OUT} \quad (4)$$

Power dissipation can be minimized and greater efficiency can be achieved by using the lowest possible input voltage necessary to achieve the required output voltage regulation.

On the VSON (DRB) package, the primary conduction path for heat is through the exposed pad to the printed-circuit-board (PCB). The pad can be connected to ground or be left floating; however, it should be attached to an appropriate amount of copper PCB area to make sure the device does not overheat. The maximum junction-to-ambient thermal resistance depends on the maximum ambient temperature, maximum device junction temperature, and power dissipation of the device and is calculated using Equation 5:

$$R_{\theta JA} = \frac{(+125°C - T_A)}{P_D} \quad (5)$$

Knowing the maximum $R_{\theta JA}$, the minimum amount of PCB copper area needed for appropriate heatsinking is estimated using Figure 34.

Copyright © 2010–2018, Texas Instruments Incorporated

Layout Guidelines (continued)

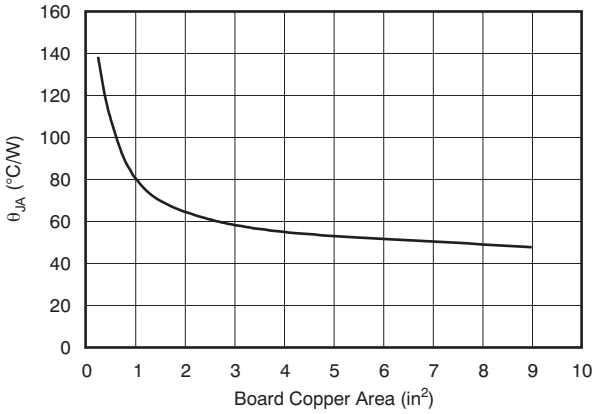

NOTE: θ_{JA} value at board size of 9 in^2 (that is, 3 inches × 3 inches) is a JEDEC standard.

Figure 34. $R_{\theta JA}$ vs Board Size

Figure 34 shows the variation of θ_{JA} as a function of ground plane copper area in the board. It is intended only as a guideline to demonstrate the effects of heat spreading in the ground plane and should not be used to estimate actual thermal performance in real application environments.

NOTE

When the device is mounted on an application PCB, it is strongly recommended to use Ψ_{JT} and Ψ_{JB}, as explained in the section.

10.1.4 Estimating Junction Temperature

Using the thermal metrics Ψ_{JT} and Ψ_{JB}, as shown in the *Thermal Information* table, the junction temperature can be estimated with corresponding formulas (given in Equation 6). For backwards compatibility, an older $\theta_{JC,Top}$ parameter is listed as well.

$$\Psi_{JT}: \quad T_J = T_T + \Psi_{JT} \bullet P_D$$
$$\Psi_{JB}: \quad T_J = T_B + \Psi_{JB} \bullet P_D \tag{6}$$

Where P_D is the power dissipation shown by Equation 5, T_T is the temperature at the center-top of the IC package, and T_B is the PCB temperature measured 1 mm away from the IC package *on the PCB surface* (as Figure 36 shows).

NOTE

Both T_T and T_B can be measured on actual application boards using a thermo gun (an infrared thermometer).

For more information about measuring T_T and T_B, see *Using New Thermal Metrics*.

By looking at Figure 35, the new thermal metrics (Ψ_{JT} and Ψ_{JB}) have very little dependency onboard size. That is, using Ψ_{JT} or Ψ_{JB} with Equation 6 is a good way to estimate T_J by simply measuring T_T or T_B, regardless of the application board size.

Copyright © 2010–2018, Texas Instruments Incorporated

Layout Guidelines (continued)

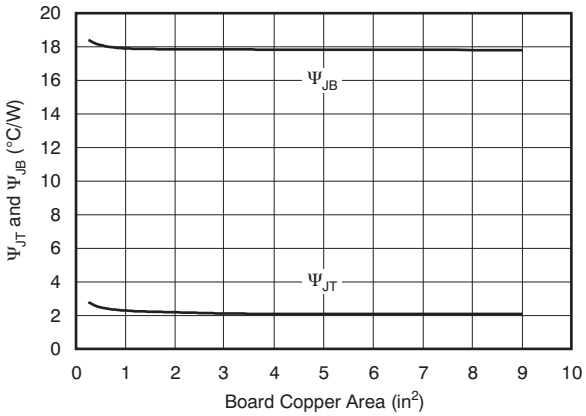

Figure 35. Ψ_{JT} and Ψ_{JB} vs Board Size

For a more detailed discussion of why TI does not recommend using $\theta_{JC(top)}$ to determine thermal characteristics, see *Using New Thermal Metrics*. For further information, see *Semiconductor and IC Package Thermal Metrics*.

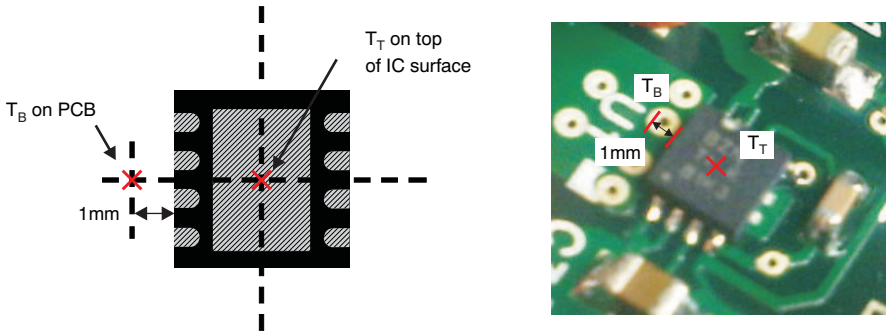

Figure 36. Measuring Points for T_T and T_B

版权 © 2010–2018, Texas Instruments Incorporated

10.2 Layout Example

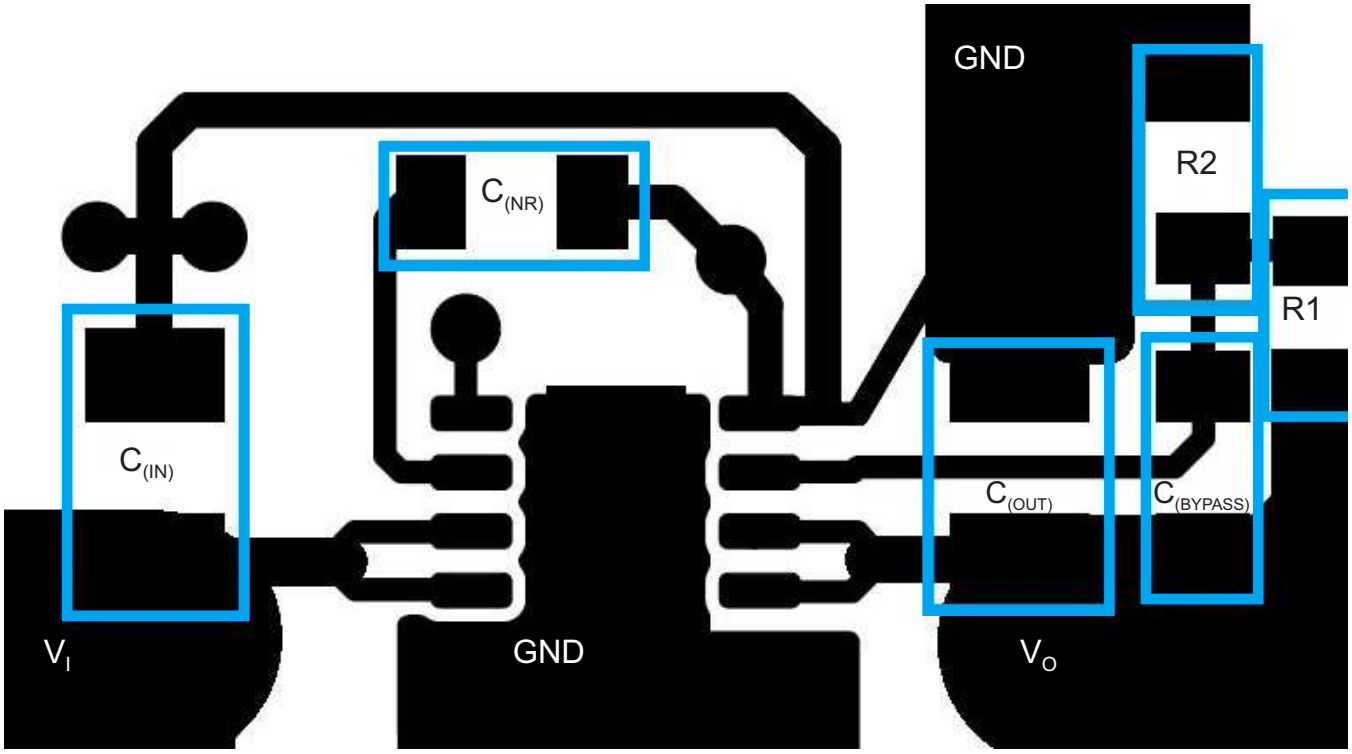

Figure 37. Layout Example

11 器件和文档支持

11.1 文档支持

11.1.1 相关文档

For related documentation see the following:

《TPS7A80xxDRBEVM 用户指南》

11.2 接收文档更新通知

要接收文档更新通知，请导航至TI.com 上的器件产品文件夹。单击右上角的通知我进行注册，即可每周接收产品信息更改摘要。

11.3 社区资源

下列链接提供到 TI 社区资源的连接。链接的内容由各个分销商“按照原样”提供。这些内容并不构成 TI 技术规范，并且不一定反映 TI 的观点；请参阅 TI 的 《使用条款》。

TI E2E™ 在线社区 ***TI 的工程师对工程师 (E2E) 社区。*** 此社区的创建目的在于促进工程师之间的协作。在 e2e.ti.com 中，您可以咨询问题、分享知识、拓展思路并与同行工程师一道帮助解决问题。

设计支持 ***TI 参考设计支持*** 可帮助您快速查找有帮助的 E2E 论坛、设计支持工具以及技术支持的联系信息。

11.4 商标

E2E is a trademark of Texas Instruments.
All other trademarks are the property of their respective owners.

11.5 静电放电警告

ESD 可能会损坏该集成电路。德州仪器 (TI) 建议通过适当的预防措施处理所有集成电路。如果不遵守正确的处理措施和安装程序，可能会损坏集成电路。

ESD 的损坏小至导致微小的性能降级，大至整个器件故障。 精密的集成电路可能更容易受到损坏，这是因为非常细微的参数更改都可能会导致器件与其发布的规格不相符。

11.6 Glossary

SLYZ022 — *TI Glossary*.

This glossary lists and explains terms, acronyms, and definitions.

12 机械、封装和可订购信息

以下页面包含机械、封装和可订购信息。这些信息是指定器件的最新可用数据。数据如有变更，恕不另行通知和修订此文档。如欲获取此数据表的浏览器版本，请参阅左侧的导航。

版权 © 2010–2018, Texas Instruments Incorporated

PACKAGING INFORMATION

Orderable part number	Status (1)	Material type (2)	Package | Pins	Package qty | Carrier	RoHS (3)	Lead finish/ Ball material (4)	MSL rating/ Peak reflow (5)	Op temp (°C)	Part marking (6)
TPS7A8001DRBR	Active	Production	SON (DRB) | 8	3000 | LARGE T&R	Yes	NIPDAU | SN	Level-2-260C-1 YEAR	-40 to 125	OFU
TPS7A8001DRBR.A	Active	Production	SON (DRB) | 8	3000 | LARGE T&R	Yes	NIPDAU	Level-2-260C-1 YEAR	-40 to 125	OFU
TPS7A8001DRBT	Active	Production	SON (DRB) | 8	250 | SMALL T&R	Yes	NIPDAU | SN	Level-2-260C-1 YEAR	-40 to 125	OFU
TPS7A8001DRBT.A	Active	Production	SON (DRB) | 8	250 | SMALL T&R	Yes	NIPDAU	Level-2-260C-1 YEAR	-40 to 125	OFU
TPS7A8001DRBTG4	Active	Production	SON (DRB) | 8	250 | SMALL T&R	Yes	NIPDAU	Level-2-260C-1 YEAR	-40 to 125	OFU
TPS7A8001DRBTG4.A	Active	Production	SON (DRB) | 8	250 | SMALL T&R	Yes	NIPDAU	Level-2-260C-1 YEAR	-40 to 125	OFU
TPS7A8012DRBR	Active	Production	SON (DRB) | 8	3000 | LARGE T&R	Yes	SN	Level-1-260C-UNLIM	-40 to 125	1G1H
TPS7A8012DRBR.A	Active	Production	SON (DRB) | 8	3000 | LARGE T&R	Yes	SN	Level-1-260C-UNLIM	-40 to 125	1G1H
TPS7A8012DRBT	Active	Production	SON (DRB) | 8	250 | SMALL T&R	Yes	SN	Level-1-260C-UNLIM	-40 to 125	1G1H
TPS7A8012DRBT.A	Active	Production	SON (DRB) | 8	250 | SMALL T&R	Yes	SN	Level-1-260C-UNLIM	-40 to 125	1G1H
TPS7A8018DRBR	Active	Production	SON (DRB) | 8	3000 | LARGE T&R	Yes	SN	Level-1-260C-UNLIM	-40 to 125	1G2H
TPS7A8018DRBR.A	Active	Production	SON (DRB) | 8	3000 | LARGE T&R	Yes	SN	Level-1-260C-UNLIM	-40 to 125	1G2H
TPS7A8018DRBT	Active	Production	SON (DRB) | 8	250 | SMALL T&R	Yes	SN	Level-1-260C-UNLIM	-40 to 125	1G2H
TPS7A8018DRBT.A	Active	Production	SON (DRB) | 8	250 | SMALL T&R	Yes	SN	Level-1-260C-UNLIM	-40 to 125	1G2H
TPS7A8033DRBR	Active	Production	SON (DRB) | 8	3000 | LARGE T&R	Yes	SN	Level-1-260C-UNLIM	-40 to 125	1G3H
TPS7A8033DRBR.A	Active	Production	SON (DRB) | 8	3000 | LARGE T&R	Yes	SN	Level-1-260C-UNLIM	-40 to 125	1G3H
TPS7A8033DRBT	Active	Production	SON (DRB) | 8	250 | SMALL T&R	Yes	SN	Level-1-260C-UNLIM	-40 to 125	1G3H
TPS7A8033DRBT.A	Active	Production	SON (DRB) | 8	250 | SMALL T&R	Yes	SN	Level-1-260C-UNLIM	-40 to 125	1G3H
TPS7A8050DRBR	Active	Production	SON (DRB) | 8	3000 | LARGE T&R	Yes	SN	Level-1-260C-UNLIM	-40 to 125	1G4H
TPS7A8050DRBR.A	Active	Production	SON (DRB) | 8	3000 | LARGE T&R	Yes	SN	Level-1-260C-UNLIM	-40 to 125	1G4H
TPS7A8050DRBRG4	Active	Production	SON (DRB) | 8	3000 | LARGE T&R	Yes	NIPDAU	Level-1-260C-UNLIM	-40 to 125	1G4H
TPS7A8050DRBRG4.A	Active	Production	SON (DRB) | 8	3000 | LARGE T&R	Yes	NIPDAU	Level-1-260C-UNLIM	-40 to 125	1G4H
TPS7A8050DRBT	Active	Production	SON (DRB) | 8	250 | SMALL T&R	Yes	SN	Level-1-260C-UNLIM	-40 to 125	1G4H
TPS7A8050DRBT.A	Active	Production	SON (DRB) | 8	250 | SMALL T&R	Yes	SN	Level-1-260C-UNLIM	-40 to 125	1G4H

(1) **Status:** For more details on status, see our product life cycle.

(2) **Material type:** When designated, preproduction parts are prototypes/experimental devices, and are not yet approved or released for full production. Testing and final process, including without limitation quality assurance, reliability performance testing, and/or process qualification, may not yet be complete, and this item is subject to further changes or possible discontinuation. If available for ordering, purchases will be subject to an additional waiver at checkout, and are intended for early internal evaluation purposes only. These items are sold without warranties of any kind.

(3) RoHS values: Yes, No, RoHS Exempt. See the TI RoHS Statement for additional information and value definition.

(4) Lead finish/Ball material: Parts may have multiple material finish options. Finish options are separated by a vertical ruled line. Lead finish/Ball material values may wrap to two lines if the finish value exceeds the maximum column width.

(5) MSL rating/Peak reflow: The moisture sensitivity level ratings and peak solder (reflow) temperatures. In the event that a part has multiple moisture sensitivity ratings, only the lowest level per JEDEC standards is shown. Refer to the shipping label for the actual reflow temperature that will be used to mount the part to the printed circuit board.

(6) Part marking: There may be an additional marking, which relates to the logo, the lot trace code information, or the environmental category of the part.

Multiple part markings will be inside parentheses. Only one part marking contained in parentheses and separated by a "~" will appear on a part. If a line is indented then it is a continuation of the previous line and the two combined represent the entire part marking for that device.

Important Information and Disclaimer: The information provided on this page represents TI's knowledge and belief as of the date that it is provided. TI bases its knowledge and belief on information provided by third parties, and makes no representation or warranty as to the accuracy of such information. Efforts are underway to better integrate information from third parties. TI has taken and continues to take reasonable steps to provide representative and accurate information but may not have conducted destructive testing or chemical analysis on incoming materials and chemicals. TI and TI suppliers consider certain information to be proprietary, and thus CAS numbers and other limited information may not be available for release.

In no event shall TI's liability arising out of such information exceed the total purchase price of the TI part(s) at issue in this document sold by TI to Customer on an annual basis.

TAPE AND REEL INFORMATION

REEL DIMENSIONS

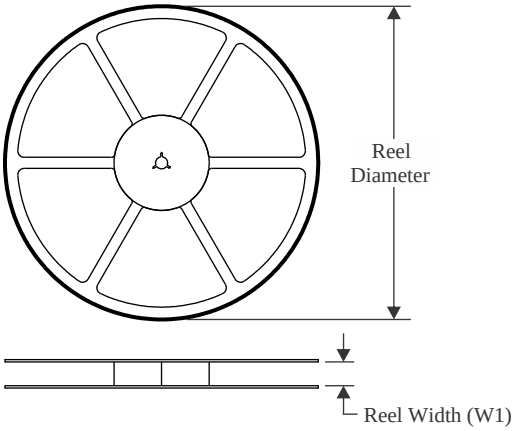

TAPE DIMENSIONS

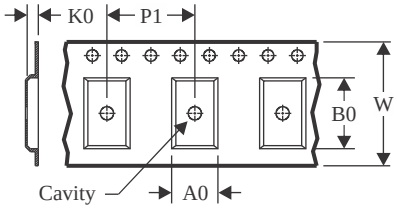

A0	Dimension designed to accommodate the component width
B0	Dimension designed to accommodate the component length
K0	Dimension designed to accommodate the component thickness
W	Overall width of the carrier tape
P1	Pitch between successive cavity centers

QUADRANT ASSIGNMENTS FOR PIN 1 ORIENTATION IN TAPE

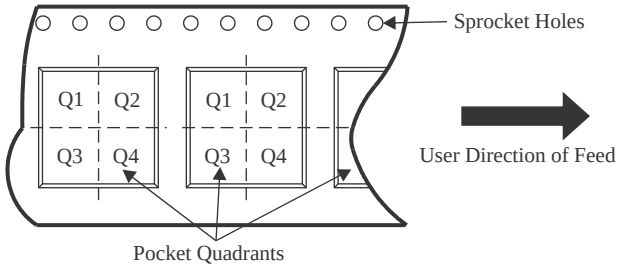

*All dimensions are nominal

Device	Package Type	Package Drawing	Pins	SPQ	Reel Diameter (mm)	Reel Width W1 (mm)	A0 (mm)	B0 (mm)	K0 (mm)	P1 (mm)	W (mm)	Pin1 Quadrant
TPS7A8001DRBR	SON	DRB	8	3000	330.0	12.4	3.3	3.3	1.1	8.0	12.0	Q2
TPS7A8001DRBT	SON	DRB	8	250	180.0	12.4	3.3	3.3	1.1	8.0	12.0	Q2
TPS7A8001DRBT	SON	DRB	8	250	180.0	12.4	3.3	3.3	1.1	8.0	12.0	Q2
TPS7A8001DRBTG4	SON	DRB	8	250	180.0	12.4	3.3	3.3	1.1	8.0	12.0	Q2
TPS7A8012DRBR	SON	DRB	8	3000	330.0	12.4	3.3	3.3	1.1	8.0	12.0	Q2
TPS7A8012DRBT	SON	DRB	8	250	180.0	12.4	3.3	3.3	1.1	8.0	12.0	Q2
TPS7A8018DRBR	SON	DRB	8	3000	330.0	12.4	3.3	3.3	1.1	8.0	12.0	Q2
TPS7A8018DRBT	SON	DRB	8	250	180.0	12.4	3.3	3.3	1.1	8.0	12.0	Q2
TPS7A8033DRBR	SON	DRB	8	3000	330.0	12.4	3.3	3.3	1.1	8.0	12.0	Q2
TPS7A8033DRBT	SON	DRB	8	250	180.0	12.4	3.3	3.3	1.1	8.0	12.0	Q2
TPS7A8050DRBR	SON	DRB	8	3000	330.0	12.4	3.3	3.3	1.1	8.0	12.0	Q2
TPS7A8050DRBRG4	SON	DRB	8	3000	330.0	12.4	3.3	3.3	1.1	8.0	12.0	Q2
TPS7A8050DRBT	SON	DRB	8	250	180.0	12.4	3.3	3.3	1.1	8.0	12.0	Q2

TAPE AND REEL BOX DIMENSIONS

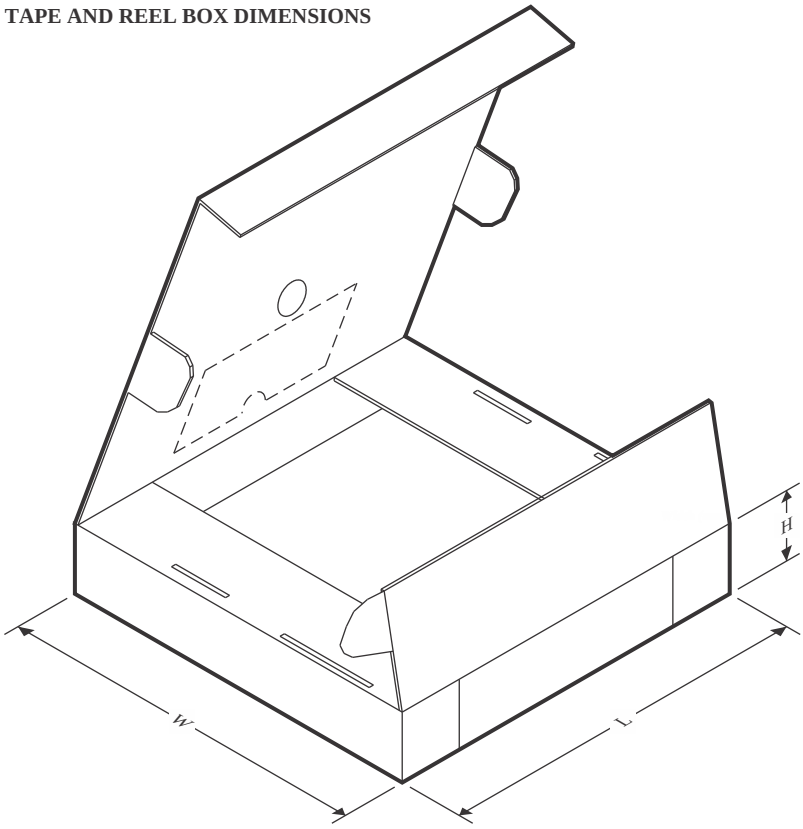

*All dimensions are nominal

Device	Package Type	Package Drawing	Pins	SPQ	Length (mm)	Width (mm)	Height (mm)
TPS7A8001DRBR	SON	DRB	8	3000	360.0	360.0	36.0
TPS7A8001DRBT	SON	DRB	8	250	210.0	185.0	35.0
TPS7A8001DRBT	SON	DRB	8	250	213.0	191.0	35.0
TPS7A8001DRBTG4	SON	DRB	8	250	210.0	185.0	35.0
TPS7A8012DRBR	SON	DRB	8	3000	360.0	360.0	36.0
TPS7A8012DRBT	SON	DRB	8	250	210.0	185.0	35.0
TPS7A8018DRBR	SON	DRB	8	3000	360.0	360.0	36.0
TPS7A8018DRBT	SON	DRB	8	250	210.0	185.0	35.0
TPS7A8033DRBR	SON	DRB	8	3000	360.0	360.0	36.0
TPS7A8033DRBT	SON	DRB	8	250	210.0	185.0	35.0
TPS7A8050DRBR	SON	DRB	8	3000	360.0	360.0	36.0
TPS7A8050DRBRG4	SON	DRB	8	3000	367.0	367.0	35.0
TPS7A8050DRBT	SON	DRB	8	250	210.0	185.0	35.0

GENERIC PACKAGE VIEW

DRB 8

VSON - 1 mm max height

PLASTIC SMALL OUTLINE - NO LEAD



Images above are just a representation of the package family, actual package may vary.
Refer to the product data sheet for package details.

4203482/L

PACKAGE OUTLINE

DRB0008A

VSON - 1 mm max height

PLASTIC SMALL OUTLINE - NO LEAD

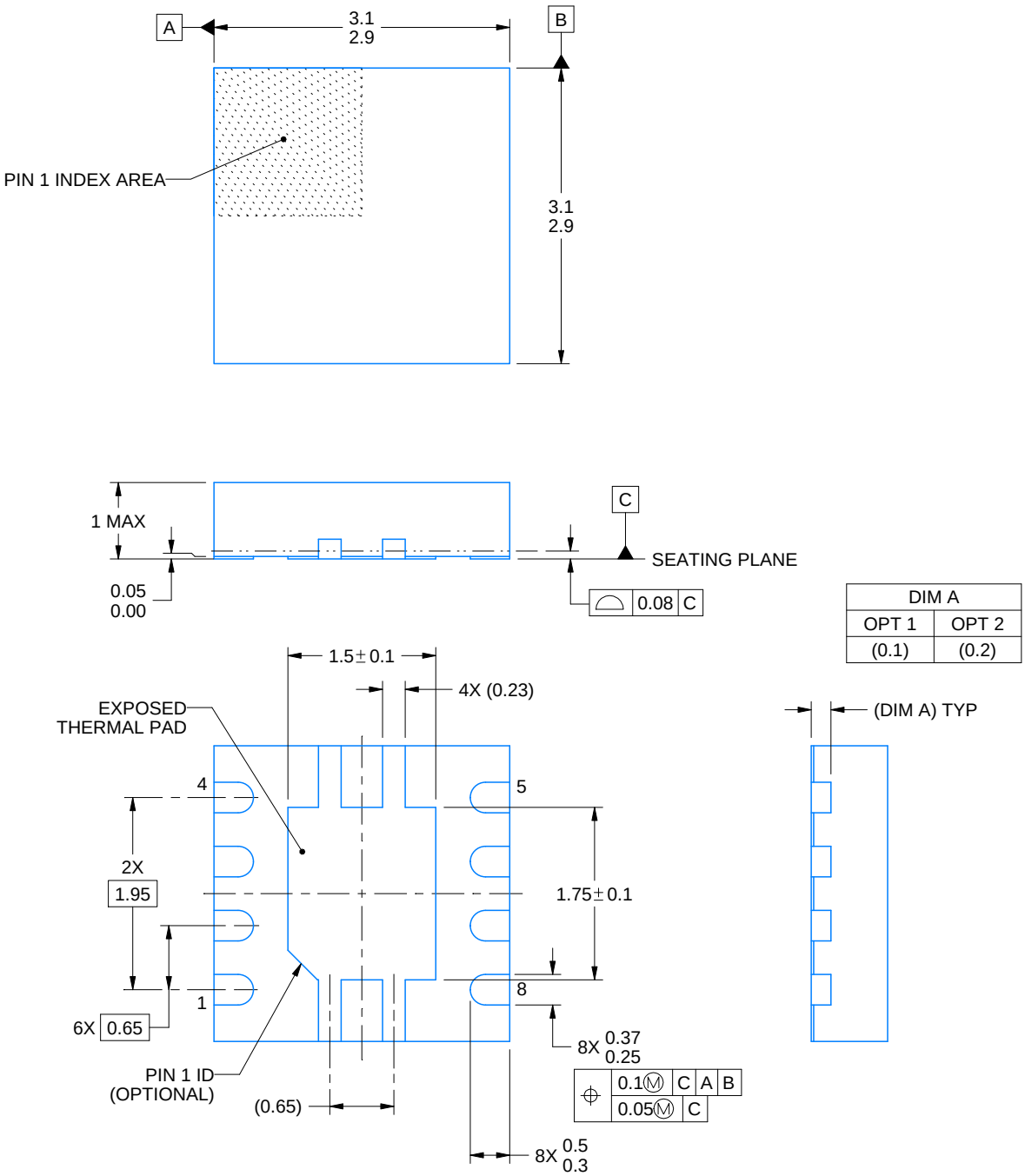

NOTES:

1. All linear dimensions are in millimeters. Any dimensions in parenthesis are for reference only. Dimensioning and tolerancing per ASME Y14.5M.
2. This drawing is subject to change without notice.
3. The package thermal pad must be soldered to the printed circuit board for thermal and mechanical performance.

EXAMPLE BOARD LAYOUT

DRB0008A

VSON - 1 mm max height

PLASTIC SMALL OUTLINE - NO LEAD

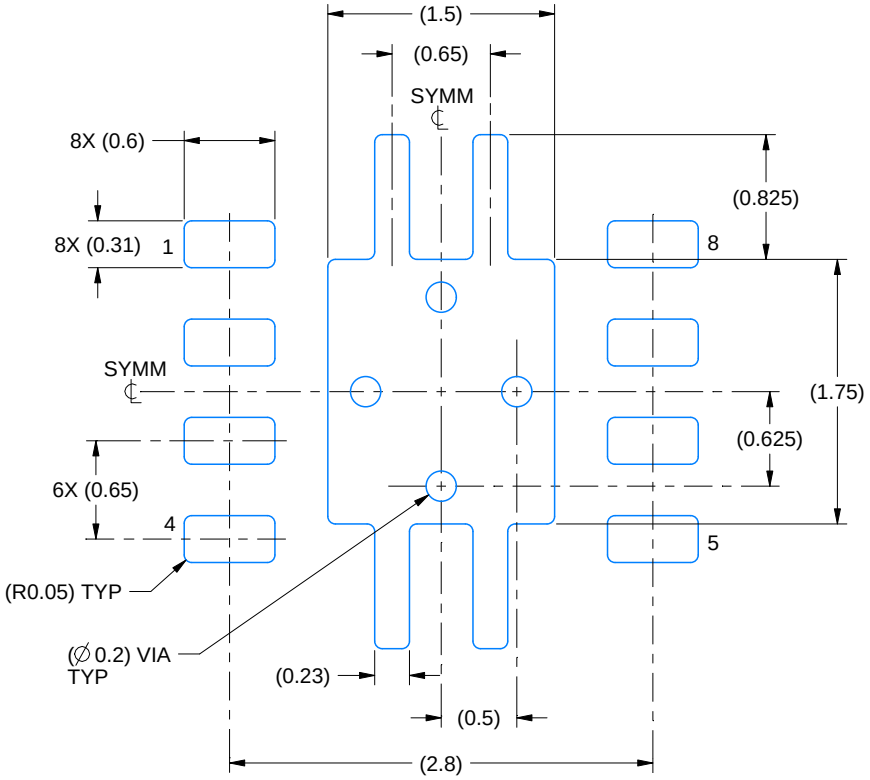

LAND PATTERN EXAMPLE
EXPOSED METAL SHOWN
SCALE:20X

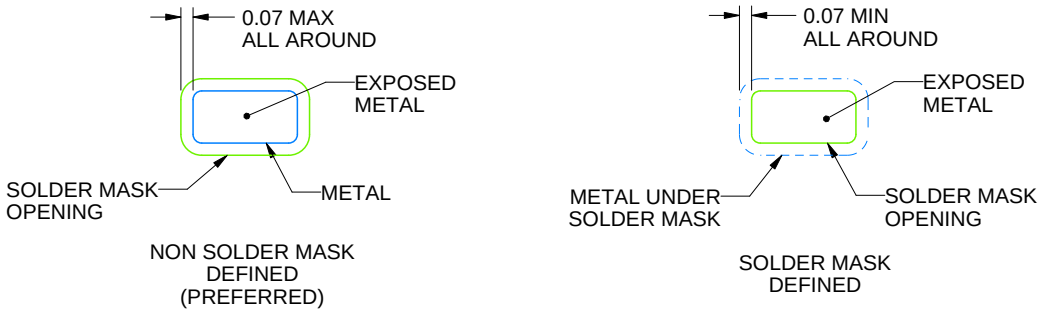

SOLDER MASK DETAILS

4218875/A 01/2018

NOTES: (continued)

4. This package is designed to be soldered to a thermal pad on the board. For more information, see Texas Instruments literature number SLUA271 (www.ti.com/lit/slua271).
5. Vias are optional depending on application, refer to device data sheet. If any vias are implemented, refer to their locations shown on this view. It is recommended that vias under paste be filled, plugged or tented.

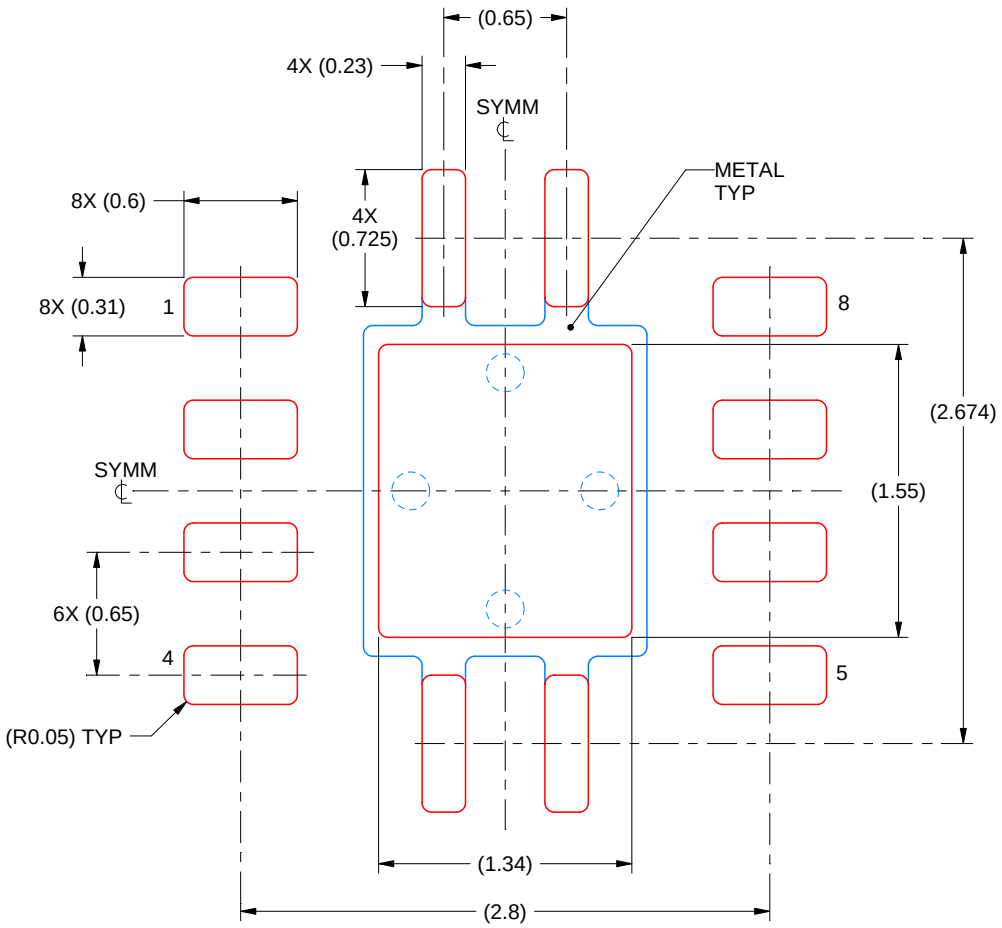

SOLDER PASTE EXAMPLE
BASED ON 0.125 mm THICK STENCIL

EXPOSED PAD
84% PRINTED SOLDER COVERAGE BY AREA
SCALE:25X

4218875/A 01/2018

NOTES: (continued)

6. Laser cutting apertures with trapezoidal walls and rounded corners may offer better paste release. IPC-7525 may have alternate design recommendations.

重要通知和免责声明

TI“按原样”提供技术和可靠性数据（包括数据表）、设计资源（包括参考设计）、应用或其他设计建议、网络工具、安全信息和其他资源，不保证没有瑕疵且不做出任何明示或暗示的担保，包括但不限于对适销性、与某特定用途的适用性或不侵犯任何第三方知识产权的暗示担保。

这些资源可供使用 TI 产品进行设计的熟练开发人员使用。您将自行承担以下全部责任：(1) 针对您的应用选择合适的 TI 产品，(2) 设计、验证并测试您的应用，(3) 确保您的应用满足相应标准以及任何其他安全、安保法规或其他要求。

这些资源如有变更，恕不另行通知。TI 授权您仅可将这些资源用于研发本资源所述的 TI 产品的相关应用。严禁以其他方式对这些资源进行复制或展示。您无权使用任何其他 TI 知识产权或任何第三方知识产权。对于因您对这些资源的使用而对 TI 及其代表造成的任何索赔、损害、成本、损失和债务，您将全额赔偿，TI 对此概不负责。

TI 提供的产品受 TI 销售条款)、TI 通用质量指南 或 ti.com 上其他适用条款或 TI 产品随附的其他适用条款的约束。TI 提供这些资源并不会扩展或以其他方式更改 TI 针对 TI 产品发布的适用的担保或担保免责声明。 除非德州仪器 (TI) 明确将某产品指定为定制产品或客户特定产品，否则其产品均为按确定价格收入目录的标准通用器件。

TI 反对并拒绝您可能提出的任何其他或不同的条款。

版权所有 © 2026，德州仪器 (TI) 公司

最后更新日期：2025 年 10 月