MSP430™ MCUs Smart Analog Combo (SAC)

Mitch Ridgeway

MSP430 Industrial Sensing

Smart Analog Combo (SAC) peripheral introduction

Overview

- **What is Smart Analog Combo?**
  - The smart analog combo (SAC) provides configurable signal chain elements for the sensing and measurement market. Customers can flexibly configure the op-amp or PGA of a signal amplifier or 12-bit DAC for internal IPs and external voltage references.
- **What is the benefit?**
  - Flexibility
    - Configurable input and output paths with internal peripherals
    - Adaptable analog conditioning circuit
    - Programmable configuration
  - Economics
    - Optimized bill-of-materials cost
    - Few to no external components required
    - Smaller printed circuit board (PCB) outline

Smart Analog Combo (SAC) peripheral introduction

Block diagram

Configurations

- General Purpose Mode (bypass DAC and PGA)
- Buffer Mode
- Non-Inverting PGA
- Inverting PGA
- DAC Mode
- Cascaded Non-inverting
- Cascaded Inverting

Target End Equipments

Applications where analog signal conditioning or analog output is needed.

Examples are:

- Smoke Detection
- Gas or PM2.5 Detector
- Current-Loop Transmitter
- Audio Applications
- Oximeter
- Blood Glucose Meter

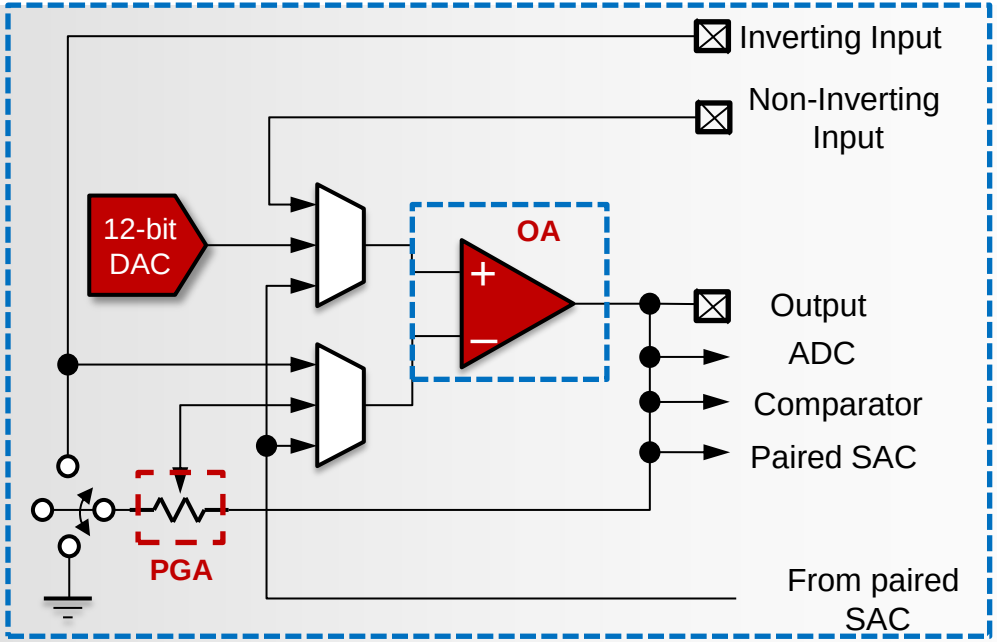

Device	SAC Configuration	Op-Amp	PGA	12-Bit DAC
MSP430FR231x	SAC-L1	√		
MSP430FR235x	SAC-L3	√	√	√

MSP430™ MCUs Smart Analog Combo (SAC)

Smart Analog Combo (SAC) operation

Smart Analog Combo (SAC) operation

Control Registers

Register	Bits
SACxPGA	MSEL
SACxPGA	GAIN
SACxOA	NSEL
SACxOA	PSEL

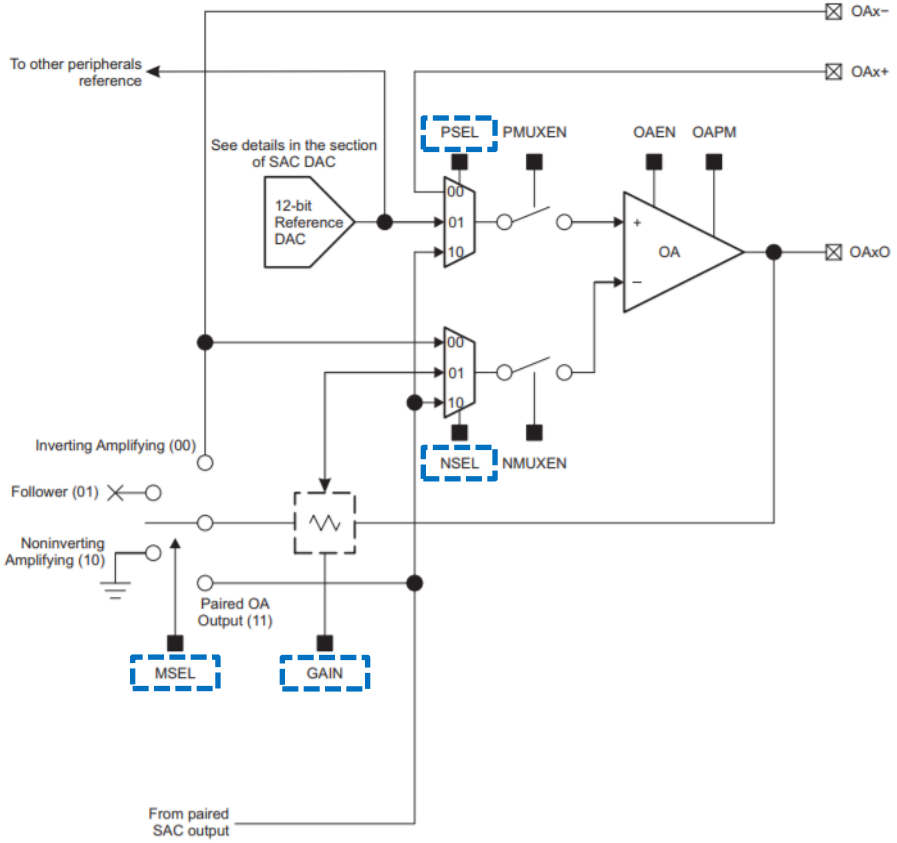

Smart Analog Combo (SAC) operation

General-Purpose mode

Register	Bits	Value
SACxPGA	MSEL	-
SACxPGA	GAIN	-
SACxOA	NSEL	00
SACxOA	PSEL	00, 10

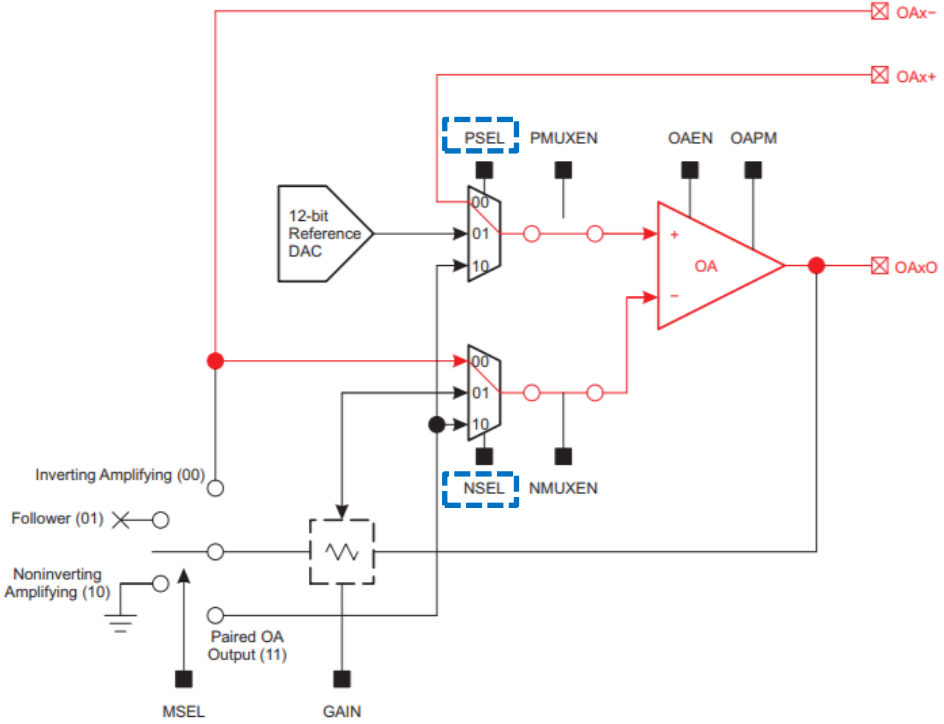

General-purpose OA sourced by external pin or cascaded OA

Smart Analog Combo (SAC) operation

Buffer mode

Register	Bits	Value
SACxPGA	MSEL	01
SACxPGA	GAIN	-
SACxOA	NSEL	01
SACxOA	PSEL	00, 01, 10

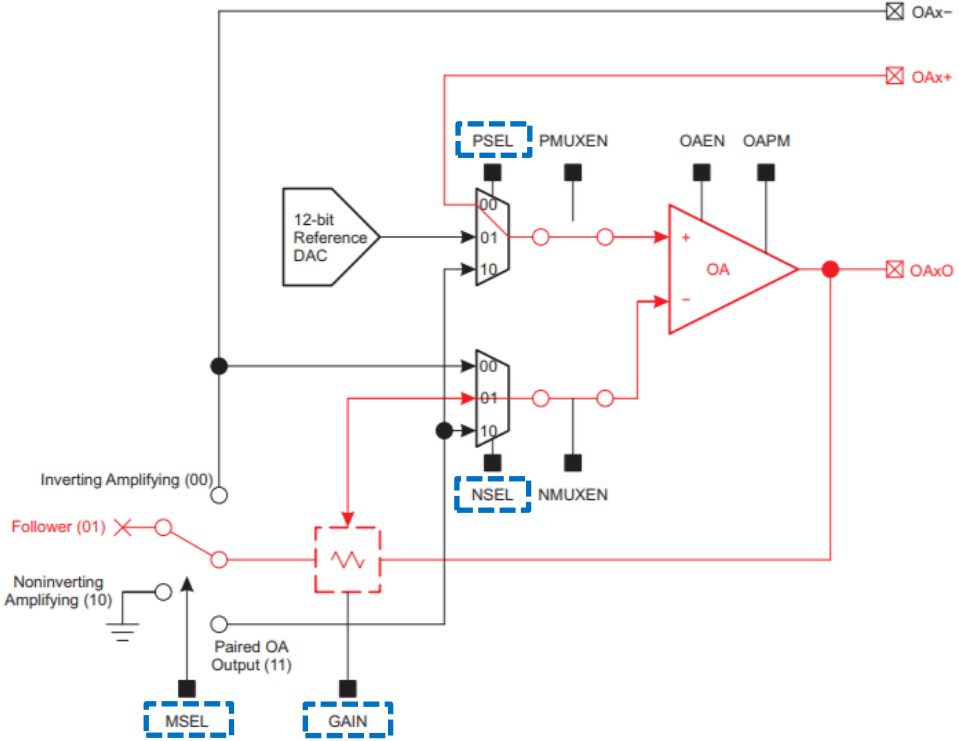

Buffer output of external pin, DAC, or paired OA output

Smart Analog Combo (SAC) operation

Noninverting PGA mode

Register	Bits	Value
SACxPGA	MSEL	10
SACxPGA	GAIN	000-111
SACxOA	NSEL	01
SACxOA	PSEL	00, 10

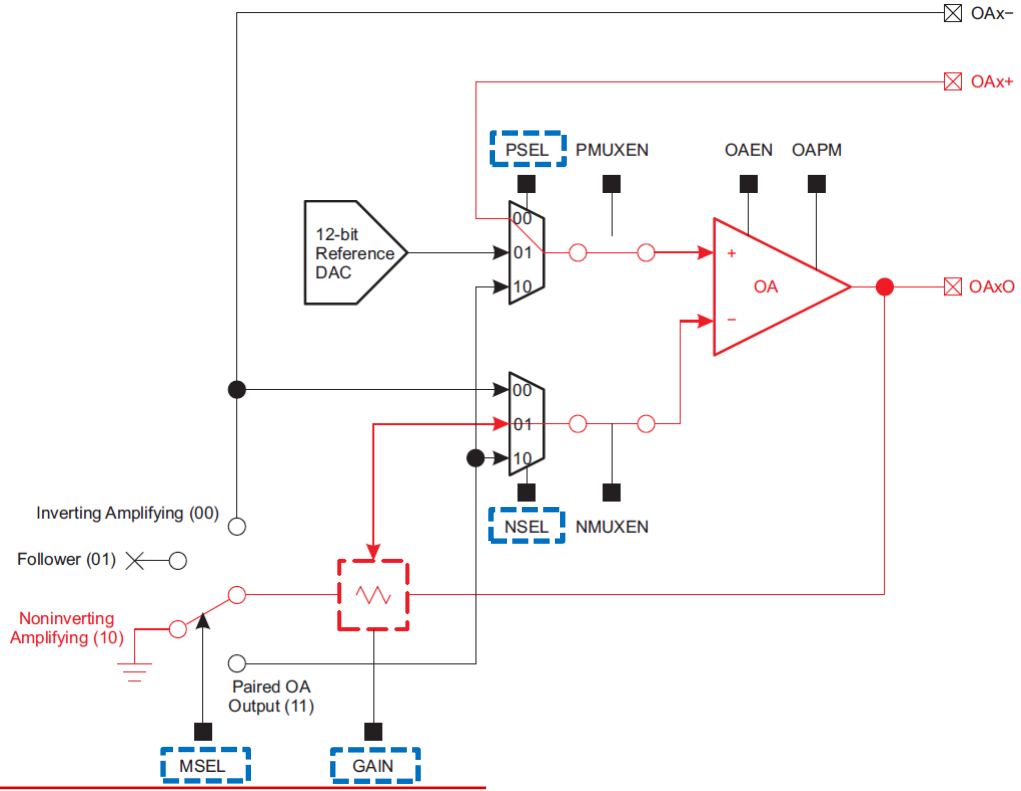

Noninverting PGA amplifier mode

Smart Analog Combo (SAC) operation

Inverting PGA mode

Register	Bits	Value
SACxPGA	MSEL	00, 11
SACxPGA	GAIN	001-111
SACxOA	NSEL	01
SACxOA	PSEL	00, 01

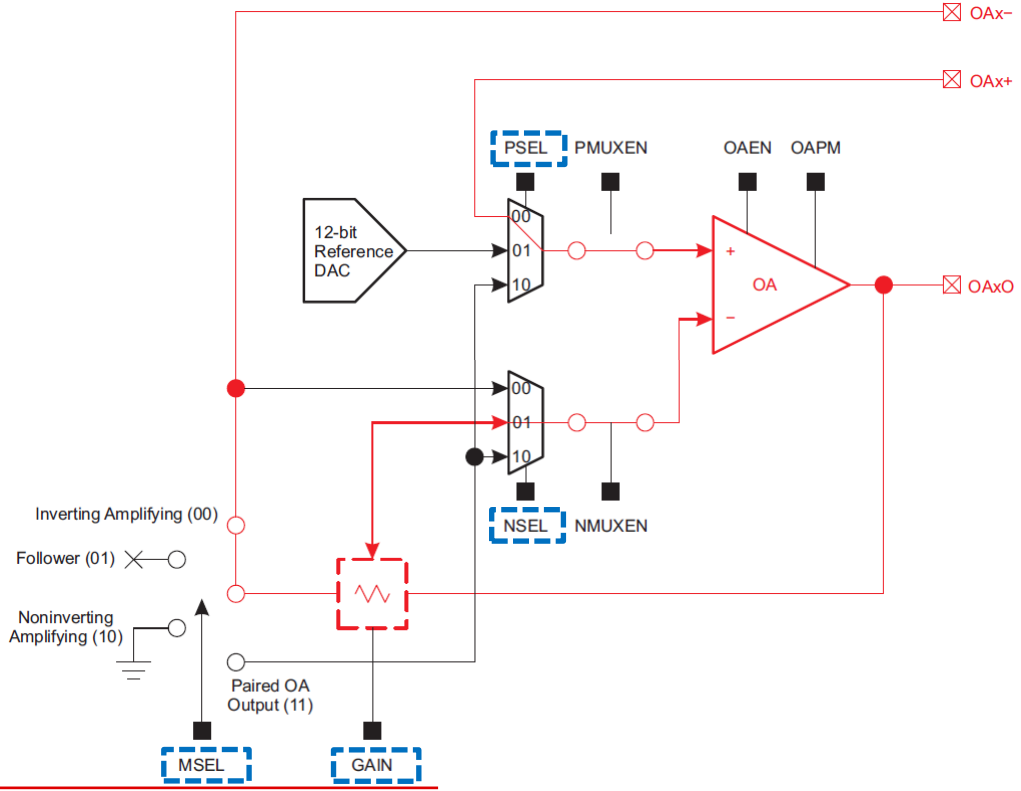

Inverting PGA amplifier mode

Smart Analog Combo (SAC) operation

DAC mode

Register	Bits	Value
SACxPGA	MSEL	01
SACxPGA	GAIN	-
SACxOA	NSEL	01
SACxOA	PSEL	01

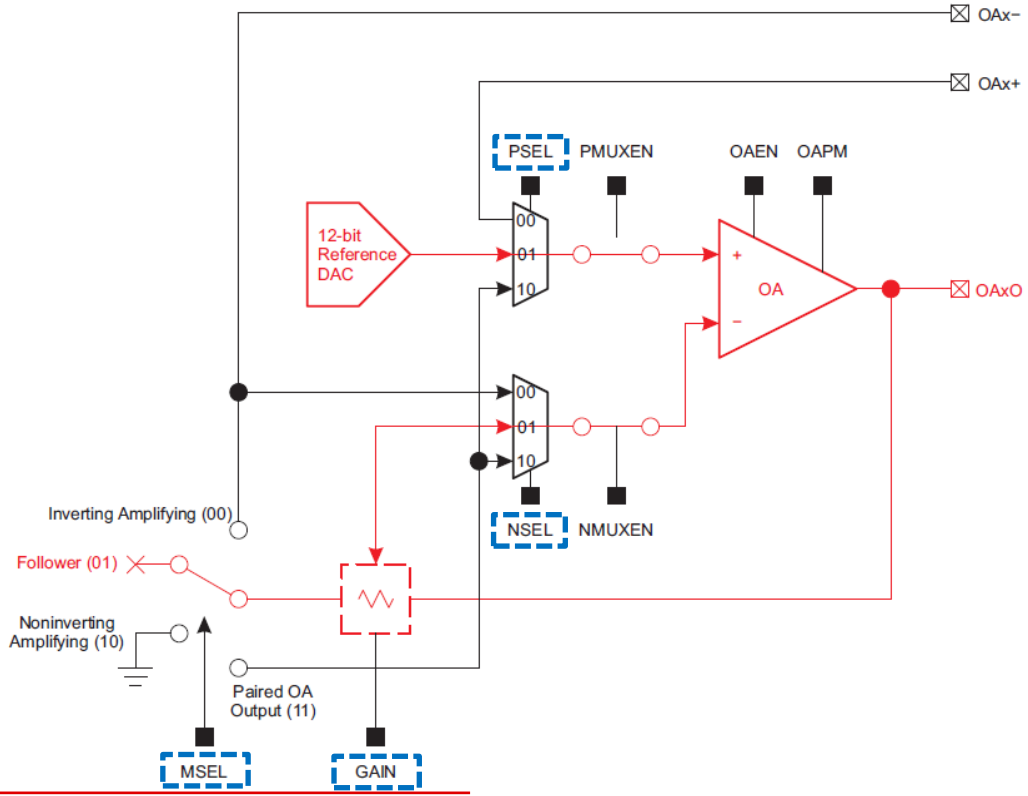

DAC mode

Smart Analog Combo (SAC) operation

Cascaded noninverting mode

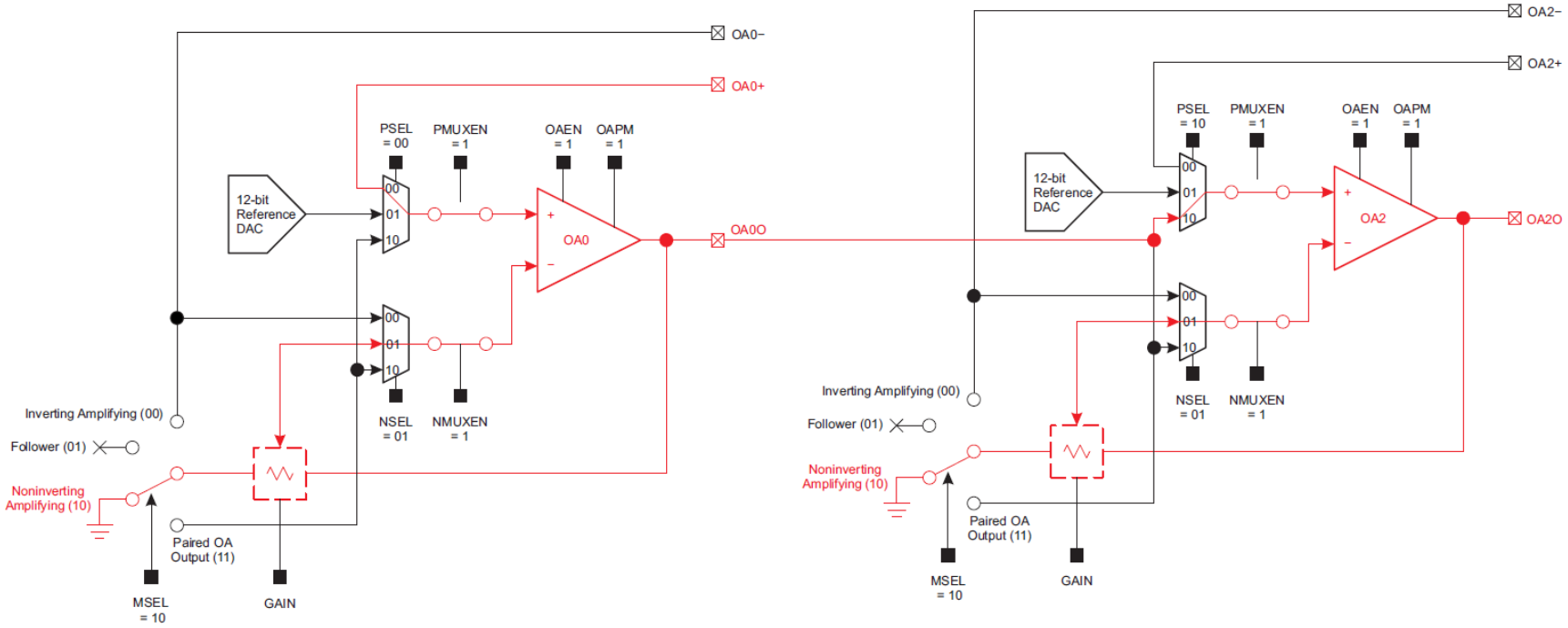

Two cascaded noninverting amplifiers

Smart Analog Combo (SAC) operation

Cascaded inverting mode

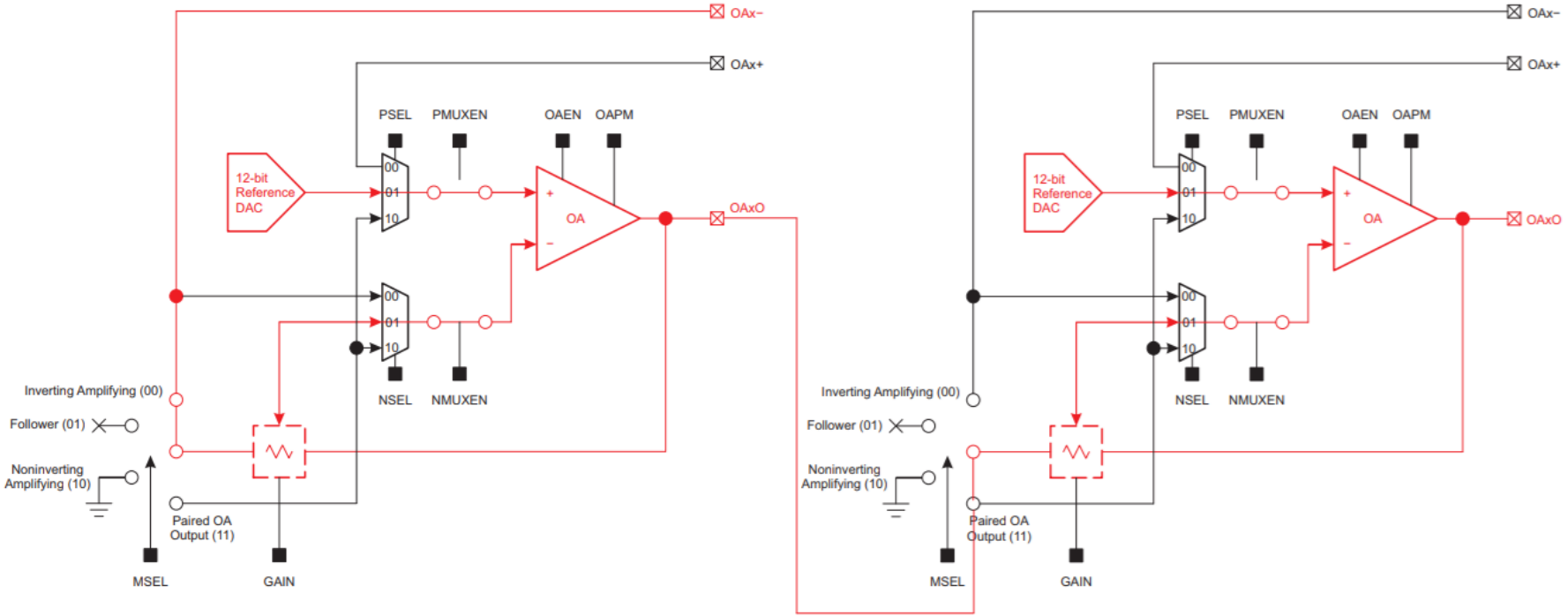

Two cascaded inverting amplifiers

MSP430™ MCUs Smart Analog Combo (SAC)

SAC-L3 applications

SAC-L3 applications
Smoke detector DC measurement

Features
- 1x SAC-L3 for TIA
- 1x SAC-L3 for Inverting PGA with DAC bias mode

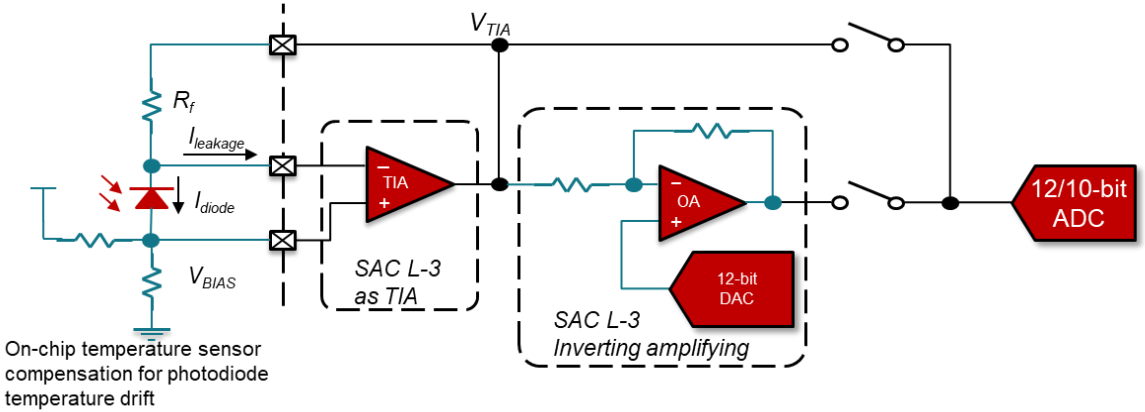

SAC-L3 applications
Smoke detector AC measurement

Features
- 1x SAC-L3 for Inverting PGA with DAC bias mode
- 1x SAC-L3 for Non-inverting PGA mode

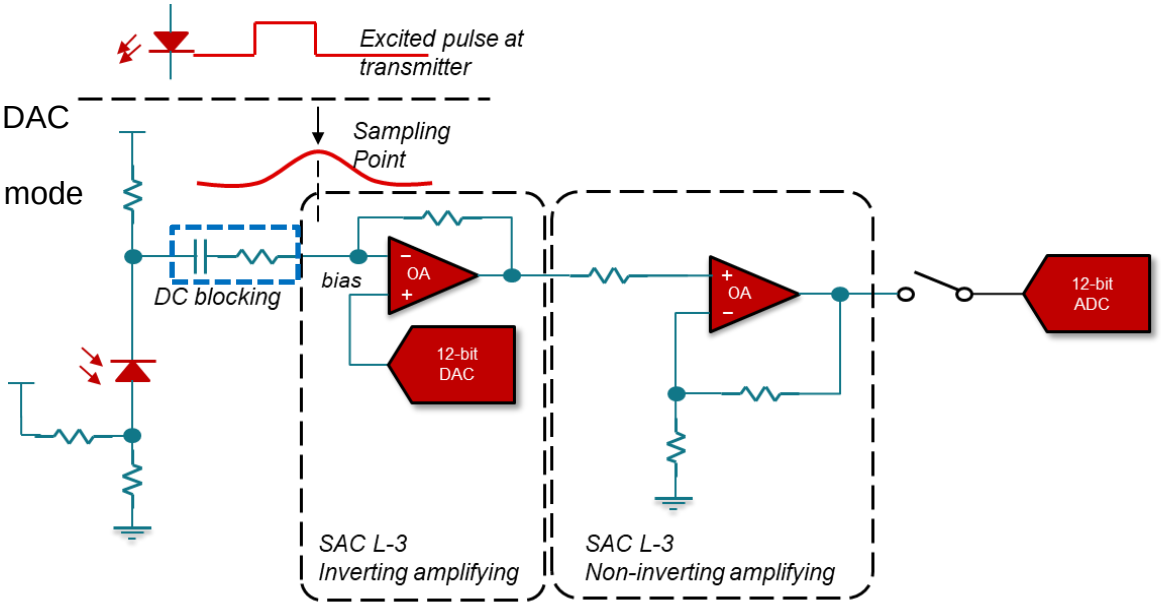

SAC-L3 applications

Dual-ray AC-coupling smoke detector

Features

- 1x SAC-L3 for Inverting PGA with DAC bias mode
- 1x SAC-L3 for Inverting PGA with DAC bias mode
- 1x SAC-L3 for DAC buffer mode
- 1x SAC-L3 for DAC buffer mode
- Red and blue dual-ray configuration for different size smoke particles

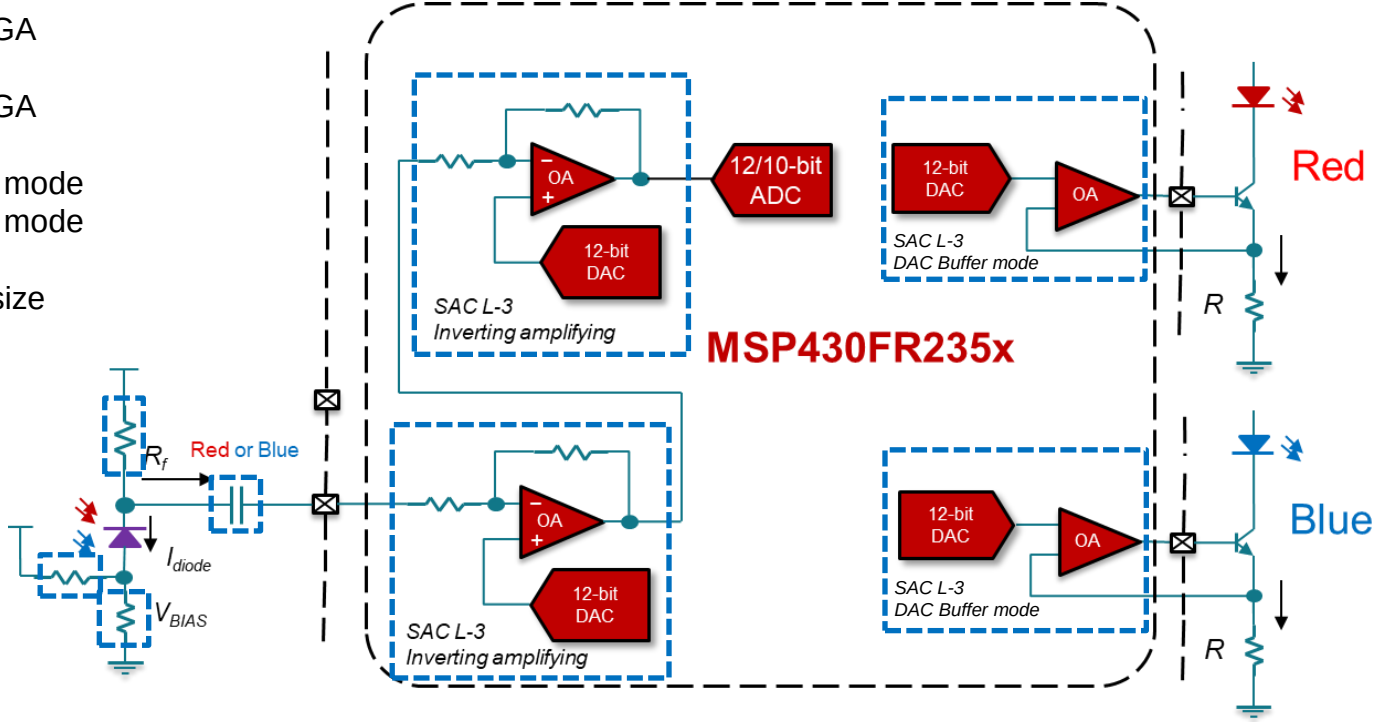

SAC-L3 applications
Gas or PM2.5 detector

Features
- 1x SAC-L3 for TIA with DAC bias mode
- 1x SAC-L3 for Inverting PGA with DAC bias mode

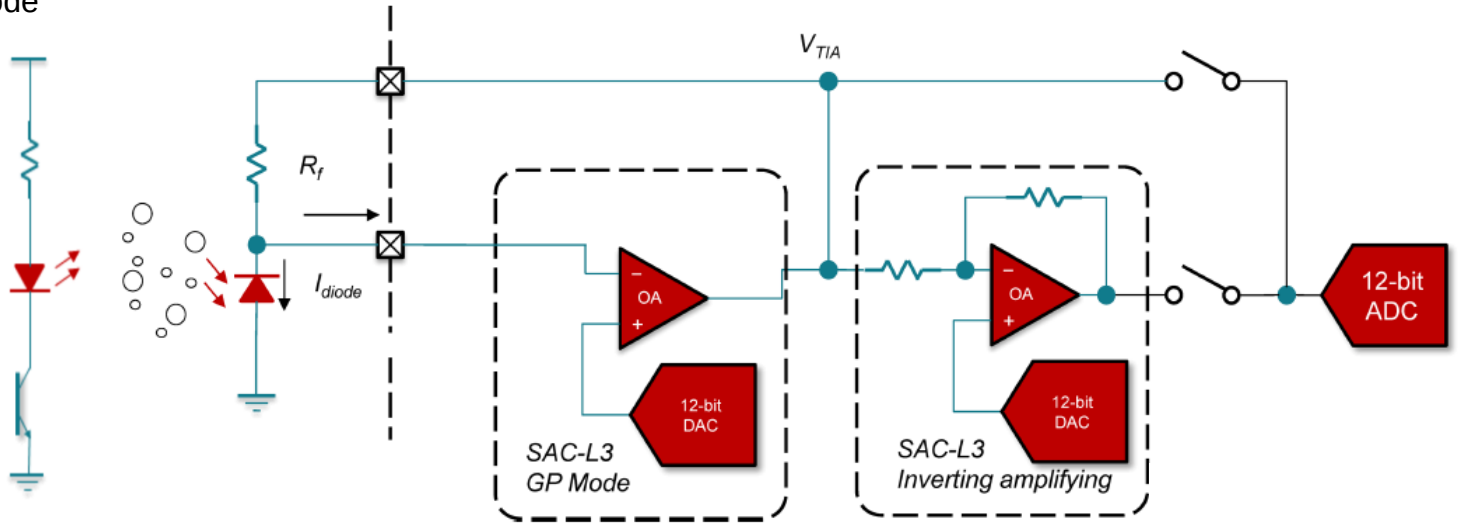

SAC-L3 applications
Audio application

Features
- 1x SAC-L3 for DAC buffer mode for audio

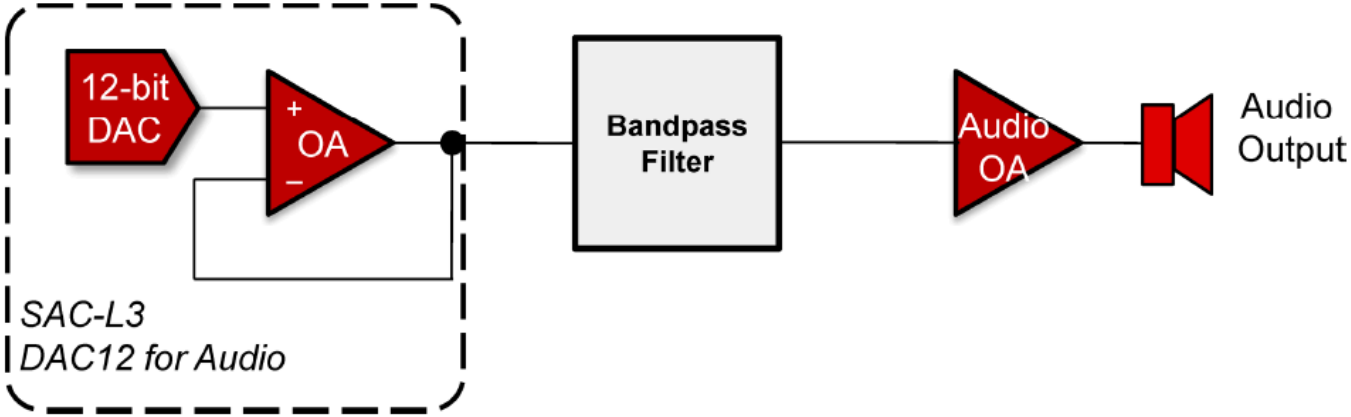

SAC-L3 applications
Blood glucose meter

Features
- 1x SAC-L3 for TIA configuration
- 1x SAC-L3 for Inverting PGA with DAC bias mode
- 1x SAC-L3 for DAC buffer mode for audio

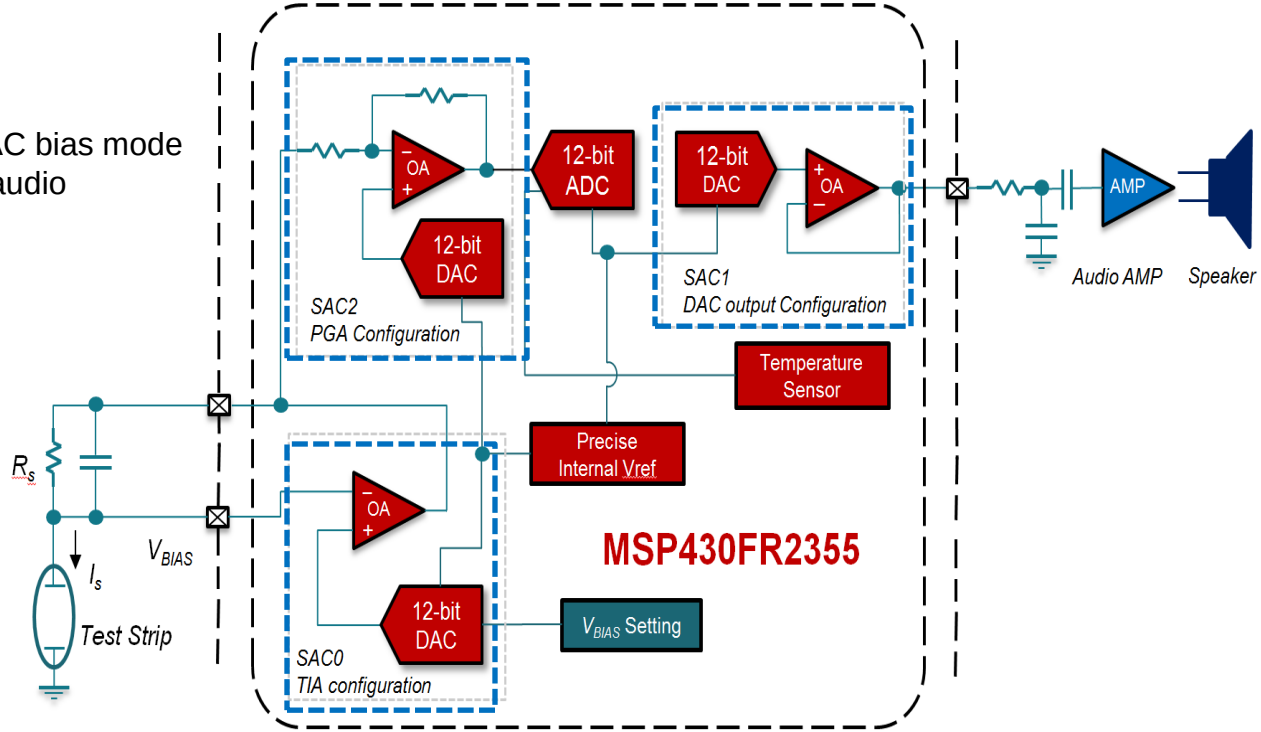

SAC-L3 applications
Current-loop transmitter

Features
- 1x SAC-L3 for DAC buffer mode
- 1x SAC-L3 for Non-Inverting OA mode to drive BJT
- Learn more from 4- to 20-mA loop-powered resistance temperature detector (RTD) temperature transmitter reference design (TIDM-01000)

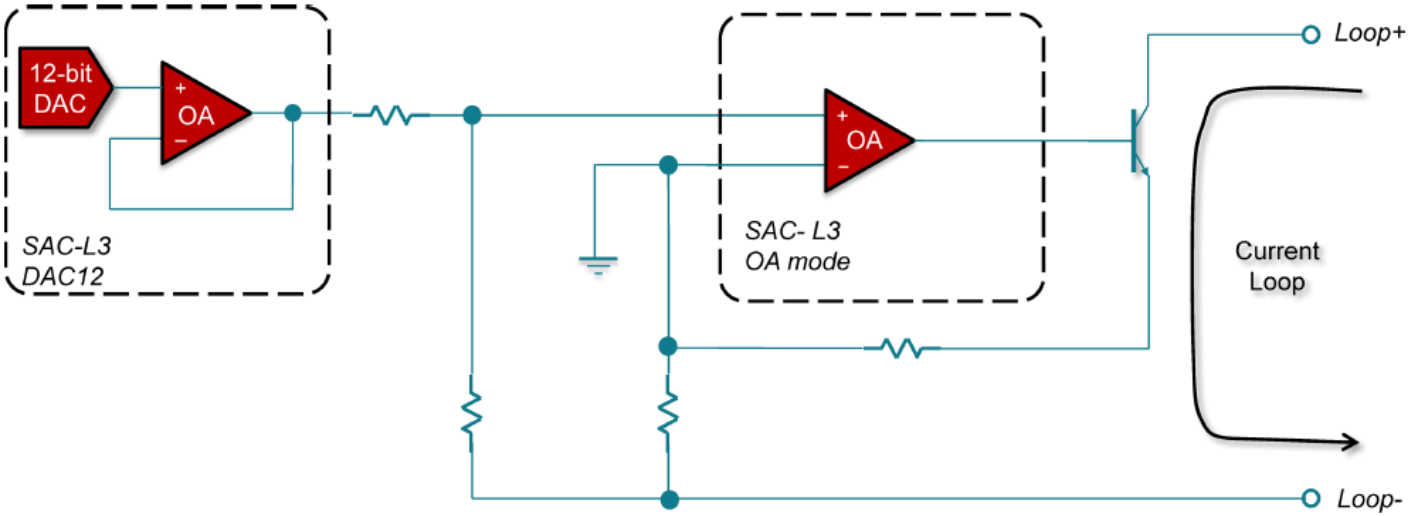

MSP430™ MCUs Smart Analog Combo (SAC)

Smart Analog Combo (SAC) SPICE model and simulation

Smart Analog Combo (SAC) SPICE model and simulation
TINA-TI

- TINA-TI provides all of the conventional DC, transient, and frequency domain analysis of SPICE and much more.
  - http://www.ti.com/tool/tina-ti

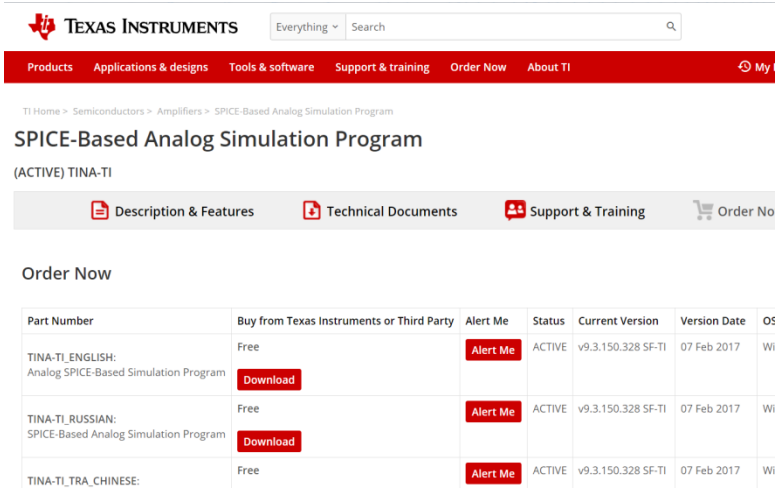

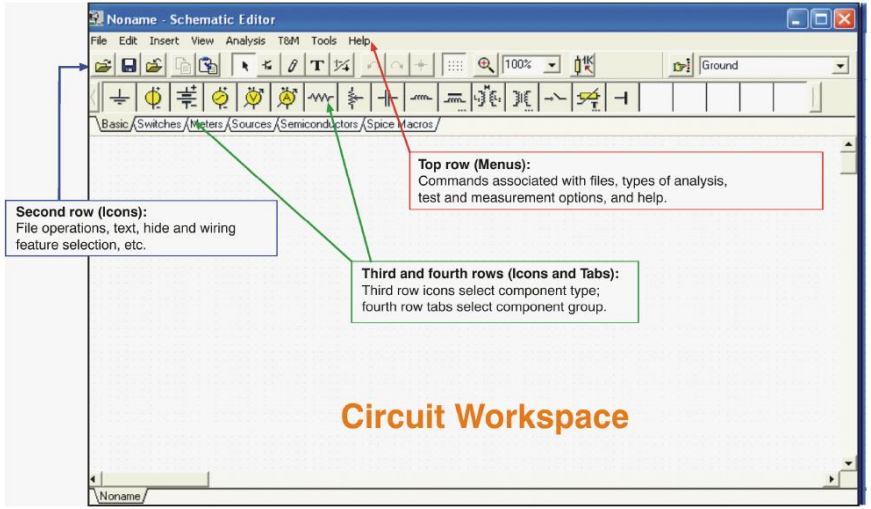

Getting Started with TINA-TI: A Quick Start Guide (Rev. A)

Smart Analog Combo (SAC) SPICE model and simulation

Get the models

- MSP430FR2311->Tools & software->Models
  - MSP430FR2311 TINA-TI Reference Design
  - MSP430FR2311 TINA-TI SPICE Model

TI Home > Semiconductors > Microcontrollers (MCU) > MSP430 Ultra-Low-Power MCUs > Value Line MCUs >

MSP430FR2311 (ACTIVE)

16 MHz Ultra-Low-Power Microcontroller - 4 KB FRAM, 1 KB SRAM, 16 IO, 8ch 10-bit ADC, OpAmp, TIA

DATASHEET

MSP430FR231x Mixed-Signal Microcontrollers datasheet (Rev. C)

View now Download

USER GUIDES

MSP430FR4xx and MSP430FR2xx Family User's Guide (Rev. H)

ERRATA

MSP430FR2311 Device Erratasheet (Rev. K)

Description & parametrics | Technical documents | **Tools & software** | Order Now | Compare | Quality & packaging | Support & training

Design kits & evaluation modules | TI Designs & reference designs | Software | Development tools | Models | TI design network

Models (2)

Title	Category	Type	Size (KB)	Date	Views
MSP430FR2311 TINA-TI Reference Design	TINA-TI Reference Design	TSC	567 KB	11 Jun 2018	5 views
MSP430FR2311 TINA-TI Spice Model	TINA-TI Spice Model	ZIP	6 KB	11 Jun 2018	5 views

slam331.tsc

MSP430FR2311_SAC.TSM

Device	SPICE Model
MSP430FR2311	MSP430FR2311 TINA-TI SPICE Model
MSP430FR2355	Coming soon…

Smart Analog Combo (SAC) SPICE model and simulation

Start the simulation

1. Insert the MSP430FR2311_SAC macro into your circuit workspace
   - Insert > Macro… > MSP430FR2311_SAC.TSM
2. Add other passive components from the tool tab of TINA-TI to complete your circuit
3. Simulate circuit
   - Analysis > Transient, AC Analysis, DC Analysis

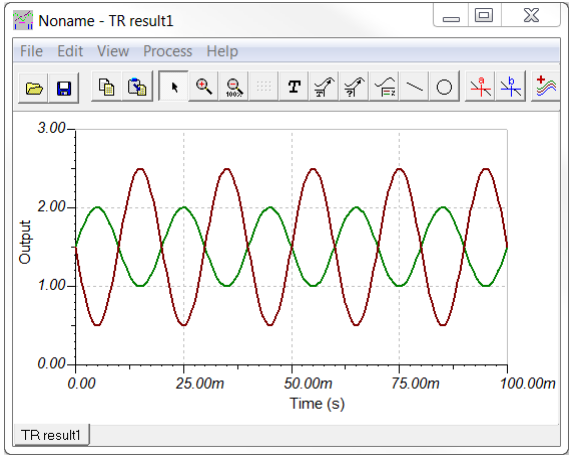

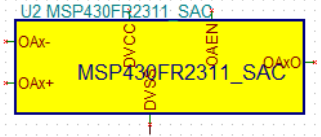

Smart Analog Combo (SAC) SPICE model and simulation
AC Simulation

Analysis > AC Analysis > AC Transfer Characteristic

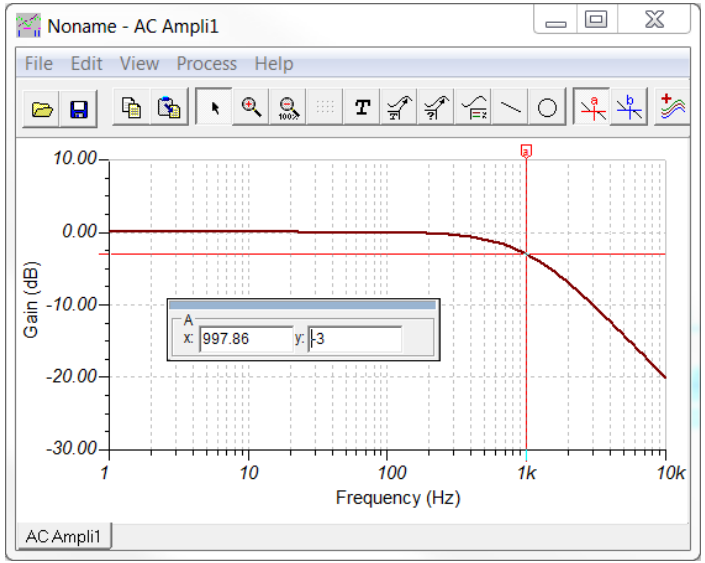

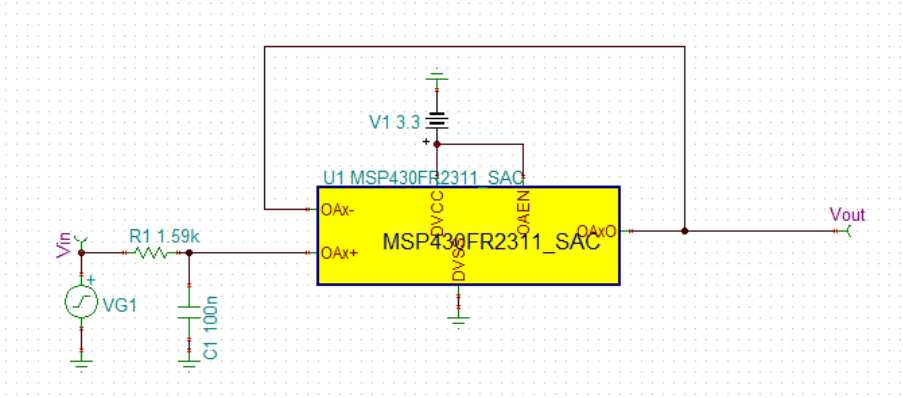

$$f_c = \frac{1}{2\pi RC} = \frac{1}{2\pi(1.59k)(100n)} = 1\text{kHz}$$

Smart Analog Combo (SAC) SPICE model and simulation
DC Simulation

Analysis > DC Analysis > DC Transfer Characteristic

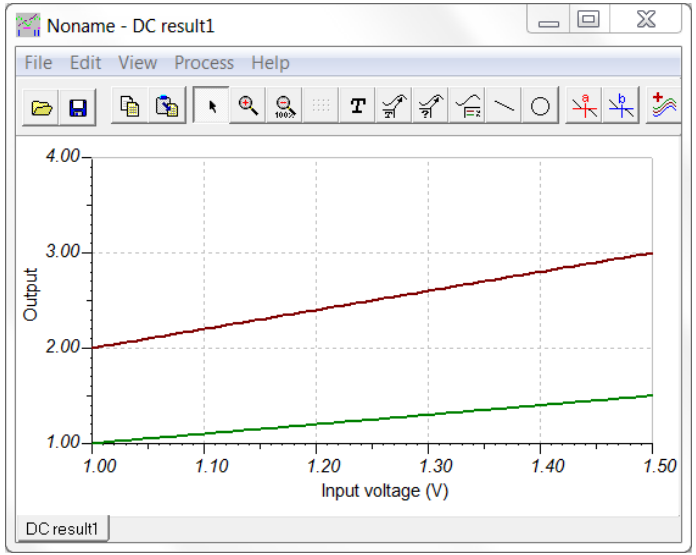

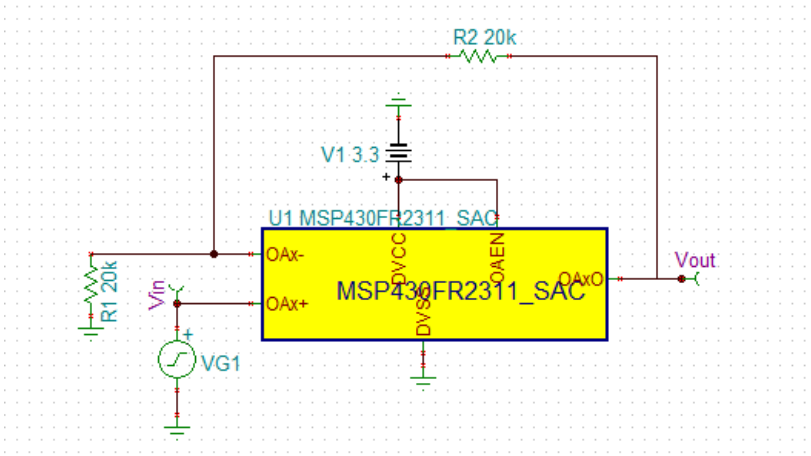

$$\text{Gain} = 1 + \frac{R2}{R1} = 1 + \frac{20k}{20k} = 2$$