SLVS022M – JANUARY 1989 – REVISED MAY 2008

- **Initial Accuracy**
  - **±4 mV for LT1004-1.2**
  - **±20 mV for LT1004-2.5**
- **Micropower Operation**
- **Operates up to 20 mA**
- **Very Low Reference Impedance**
- **Applications:**
  - **Portable Meter Reference**
  - **Portable Test Instruments**
  - **Battery-Operated Systems**
  - **Current-Loop Instrumentation**

D OR PW PACKAGE
(TOP VIEW)

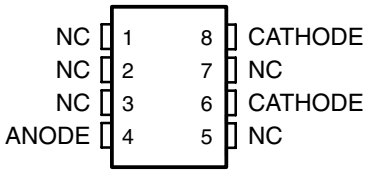

NC – No internal connection
Terminals 6 and 8 are internally connected.

LP PACKAGE
(TOP VIEW)

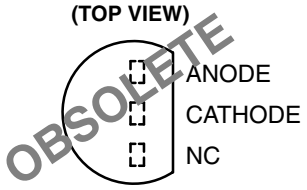

NC – No internal connection

description/ordering information

The LT1004 micropower voltage reference is a two-terminal band-gap reference diode designed to provide high accuracy and excellent temperature characteristics at very low operating currents. Optimizing the key parameters in the design, processing, and testing of the device results in specifications previously attainable only with selected units.

The LT1004 is a pin-for-pin replacement for the LM285 and LM385 series of references, with improved specifications. It is an excellent device for use in systems in which accuracy previously was attained at the expense of power consumption and trimming.

The LT1004C is characterized for operation from 0°C to 70°C. The LT1004I is characterized for operation from –40°C to 85°C.

Please be aware that an important notice concerning availability, standard warranty, and use in critical applications of Texas Instruments semiconductor products and disclaimers thereto appears at the end of this data sheet.

PRODUCTION DATA information is current as of publication date. Products conform to specifications per the terms of Texas Instruments standard warranty. Production processing does not necessarily include testing of all parameters.

Copyright © 2008, Texas Instruments Incorporated

description/ordering information (continued)

ORDERING INFORMATION†

T_A	V_Z TYP	PACKAGE‡		ORDERABLE PART NUMBER	TOP-SIDE MARKING
0°C to 70°C	1.2 V	SOIC (D)	Tube of 75	LT1004CD-1-2	4C-12
			Reel of 2500	LT1004CDR-1-2	
		TSSOP (PW)	Tube of 150	LT1004CPW-1-2	4C-12
			Reel of 2000	LT1004CPWR-1-2	
	2.5 V	SOIC (D)	Tube of 75	LT1004CD-2-5	4C-25
			Reel of 2500	LT1004CDR-2-5	
		TSSOP (PW)	Tube of 150	LT1004CPW-2-5	4C-25
			Reel of 2000	LT1004CPWR-2-5	
–40°C to 85°C	1.2 V	SOIC (D)	Tube of 75	LT1004ID-1-2	4I-12
			Reel of 2500	LT1004IDR-1-2	
		TSSOP (PW)	Tube of 150	LT1004IPW-1-2	4I-12
			Reel of 2000	LT1004IPWR-1-2	
	2.5 V	SOIC (D)	Tube of 75	LT1004ID-2-5	4I-25
			Reel of 2500	LT1004IDR-2-5	
		TSSOP (PW)	Tube of 150	LT1004IPW-2-5	4I-25
			Reel of 2000	LT1004IPWR-2-5	

† For the most current package and ordering information, see the Package Option Addendum at the end of this document, or see the TI web site at http://www.ti.com.
‡ Package drawings, thermal data, and symbolization are available at http://www.ti.com/packaging.

symbol

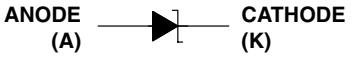

schematic

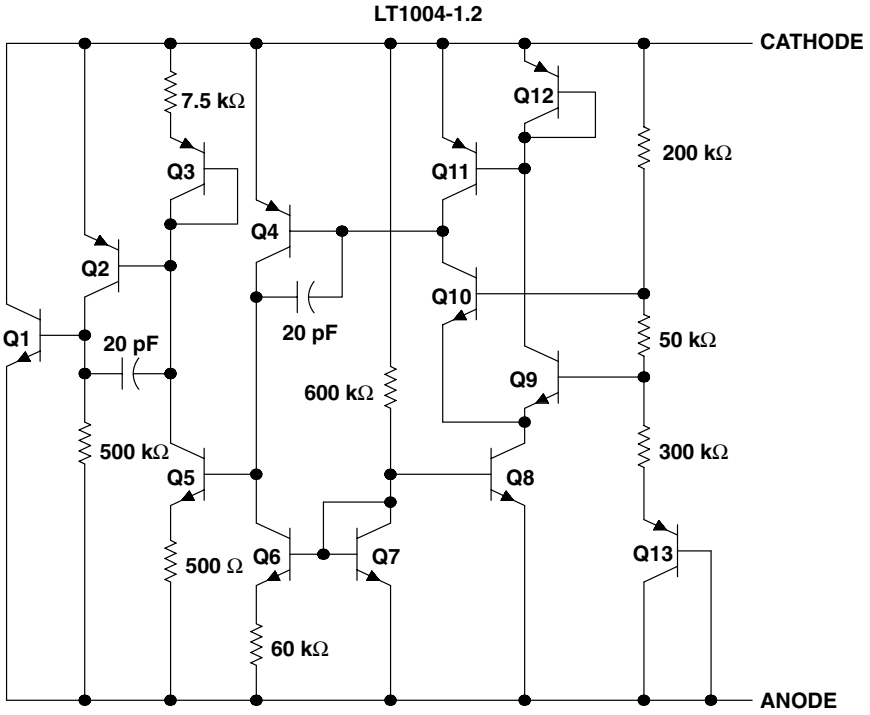

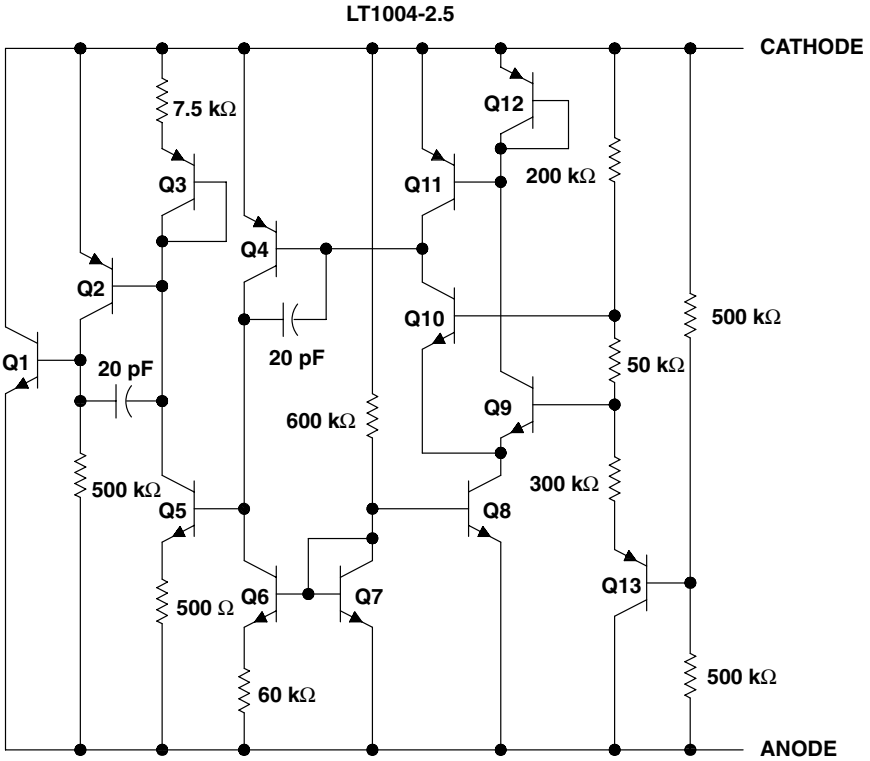

NOTE A: All component values shown are nominal.

absolute maximum ratings over operating free-air temperature range (unless otherwise noted)†

Reverse current, I_R . . . . . 30 mA
Forward current, I_F . . . . . 10 mA
Package thermal impedance, θ_{JA} (see Notes 1 and 2): D package . . . . . 97°C/W
PW package . . . . . 149°C/W
Operating virtual junction temperature, T_J . . . . . 150°C
Lead temperature 1,6 mm (1/16 inch) from case for 10 seconds . . . . . 260°C
Storage temperature range, T_{stg} . . . . . –65°C to 150°C

† Stresses beyond those listed under "absolute maximum ratings" may cause permanent damage to the device. These are stress ratings only, and functional operation of the device at these or any other conditions beyond those indicated under "recommended operating conditions" is not implied. Exposure to absolute-maximum-rated conditions for extended periods may affect device reliability.

NOTES: 1. Maximum power dissipation is a function of $T_J(max)$, θ_{JA}, and T_A. The maximum allowable power dissipation at any allowable ambient temperature is $P_D = (T_J(max) - T_A)/\theta_{JA}$. Operating at the absolute maximum T_J of 150°C can affect reliability.
2. The package thermal impedance is calculated in accordance with JESD 51-7.

recommended operating conditions

			MIN	MAX	UNIT
T_A	Operating free-air temperature	LT1004C	0	70	°C
		LT1004I	–40	85	

electrical characteristics at specified free-air temperature

PARAMETER		TEST CONDITIONS	T_A‡		LT1004-1.2 MIN	LT1004-1.2 TYP	LT1004-1.2 MAX	LT1004-2.5 MIN	LT1004-2.5 TYP	LT1004-2.5 MAX	UNIT
V_Z	Reference voltage	I_Z = 100 µA	25°C		1.231	1.235	1.239	2.48	2.5	2.52	V
			Full range	LT1004C	1.225		1.245	2.47		2.53	
				LT1004I	1.225		1.245	2.47		2.53	
α_{V_Z}	Average temperature coefficient of reference voltage§	I_Z = 10 µA	25°C			20					ppm/°C
		I_Z = 20 µA							20		
ΔV_Z	Change in reference voltage with current	$I_Z = I_Z(min)$ to 1 mA	25°C				1			1	mV
			Full range				1.5			1.5	
		I_Z = 1 mA to 20 mA	25°C				10			10	
			Full range				20			20	
$\Delta V_Z/\Delta t$	Long-term change in reference voltage	I_Z = 100 µA	25°C			20			20		ppm/khr
$I_Z(min)$	Minimum reference current		Full range			8	10		12	20	µA
z_z	Reference impedance	I_Z = 100 µA	25°C			0.2	0.6		0.2	0.6	Ω
			Full range				1.5			1.5	
V_n	Broadband noise voltage	I_Z = 100 µA, f = 10 Hz to 10 kHz	25°C			60			120		µV

‡ Full range is 0°C to 70°C for the LT1004C and –40°C to 85°C for the LT1004I.

§ The average temperature coefficient of reference voltage is defined as the total change in reference voltage divided by the specified temperature range.

TYPICAL CHARACTERISTICS

Table of Graphs

GRAPH TITLE	FIGURE
LT1004x-1.2	
Reverse current vs Reverse voltage	1
Reference-voltage change vs Reverse current	2
Forward voltage vs Forward current	3
Reference voltage vs Free-air temperature	4
Reference impedance vs Reference current	5
Noise voltage vs Frequency	6
Filtered output noise voltage vs Cutoff frequency	7
LT1004x-2.5	
Transient response	8
Reverse current vs Reverse voltage	9
Forward voltage vs Forward current	10
Reference voltage vs Free-air temperature	11
Reference impedance vs Reference current	12
Noise voltage vs Frequency	13
Filtered output noise voltage vs Cutoff frequency	14
Transient response	15

TYPICAL CHARACTERISTICS†

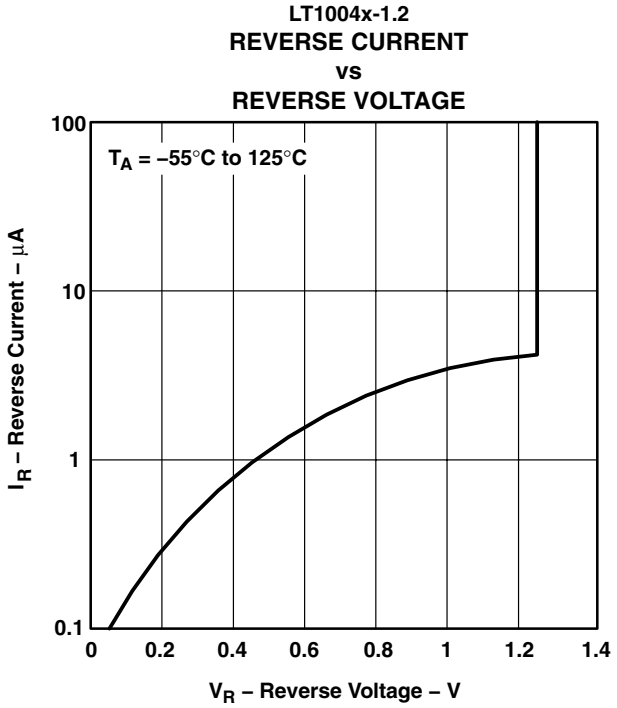

Figure 1

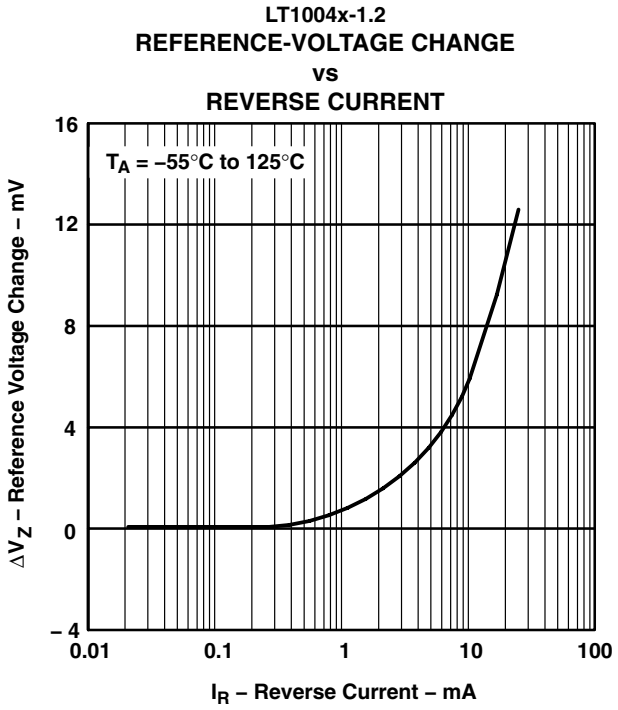

Figure 2

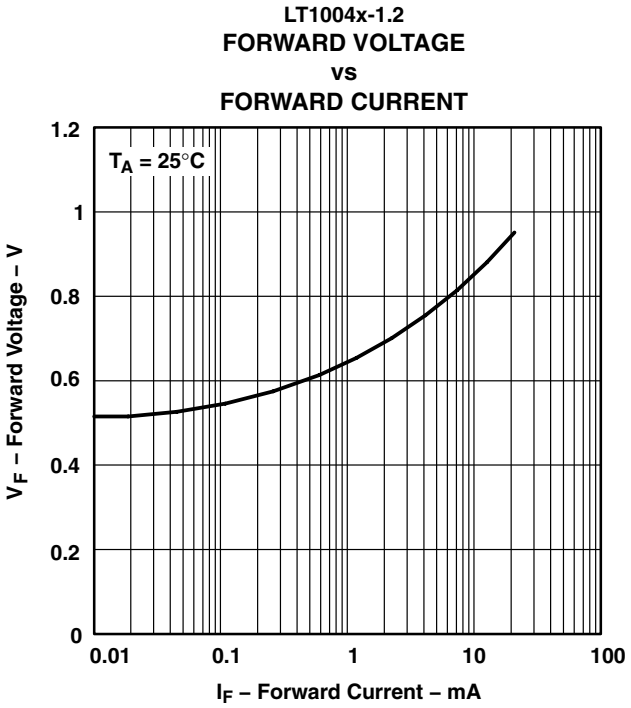

Figure 3

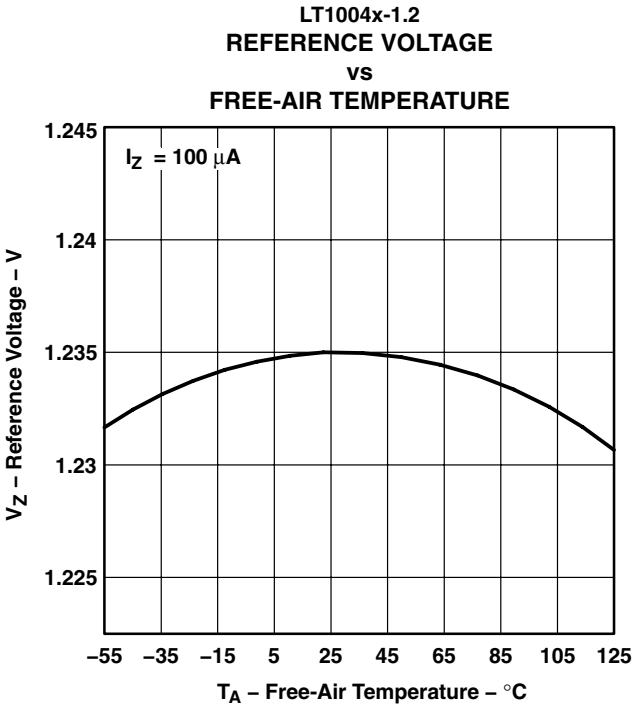

Figure 4

† Data at high and low temperatures are applicable only within the rated operating free-air temperature ranges of the various devices.

TYPICAL CHARACTERISTICS†

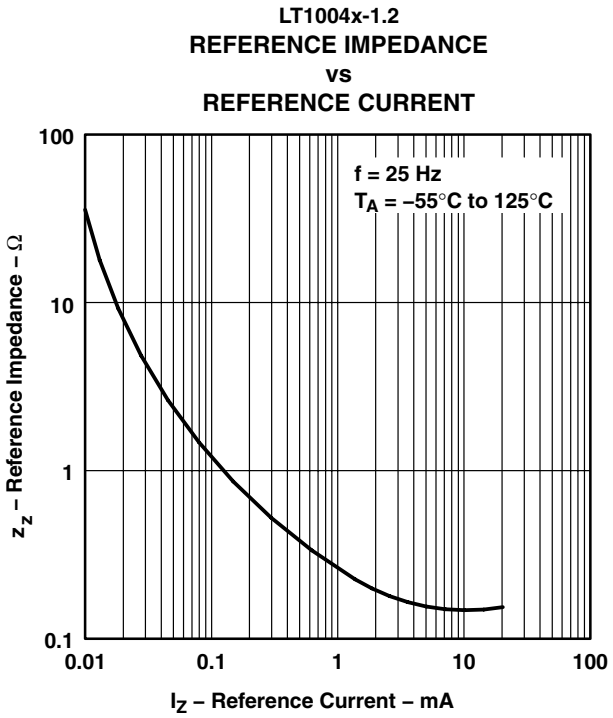

Figure 5

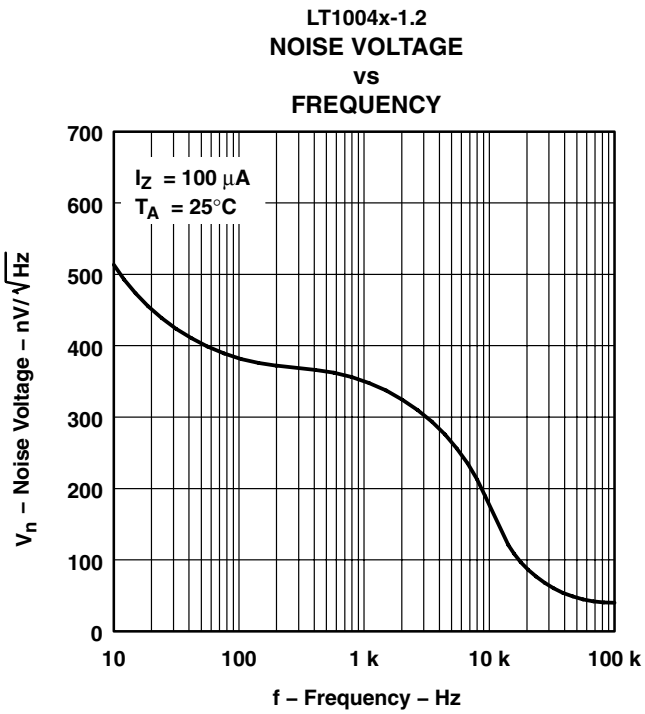

Figure 6

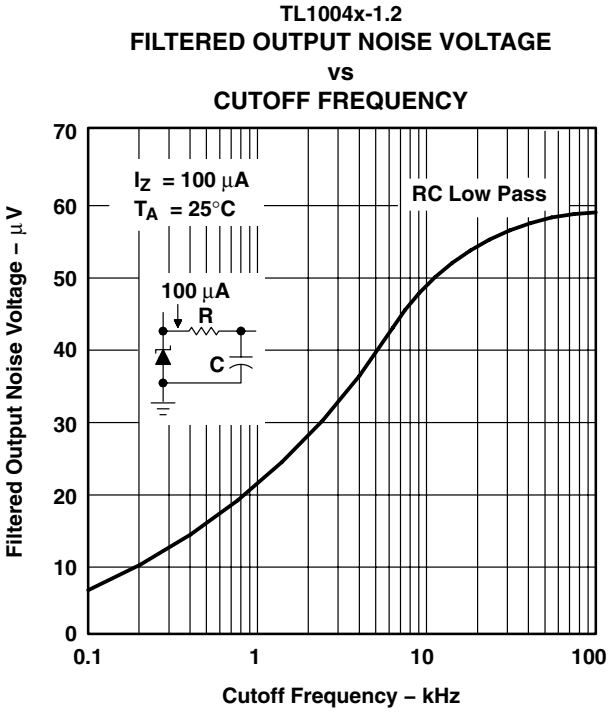

Figure 7

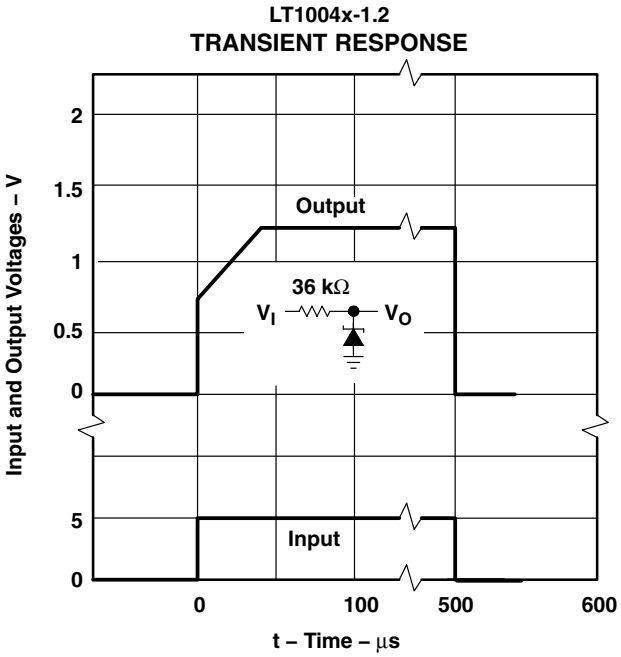

Figure 8

† Data at high and low temperatures are applicable only within the rated operating free-air temperature ranges of the various devices.

TYPICAL CHARACTERISTICS†

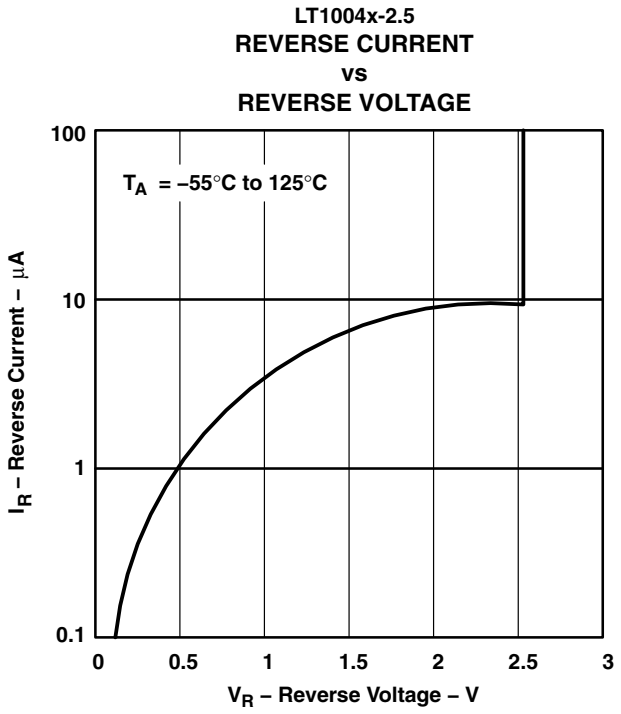

Figure 9

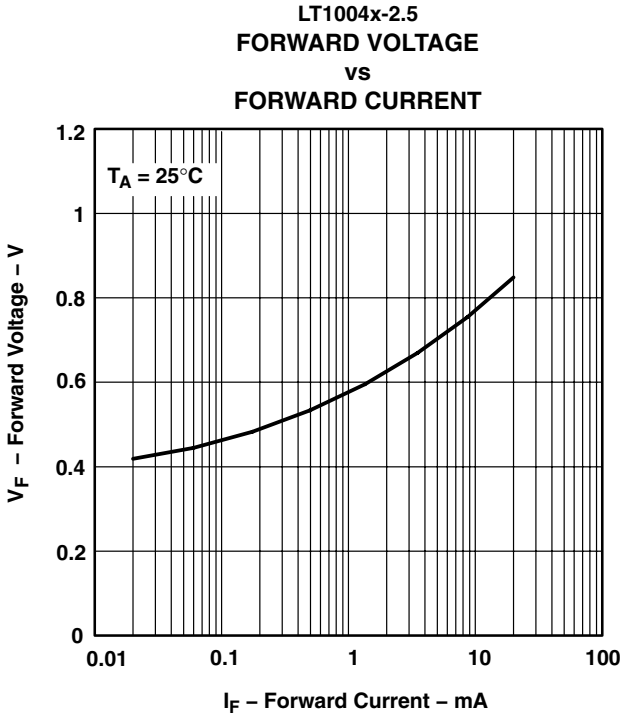

Figure 10

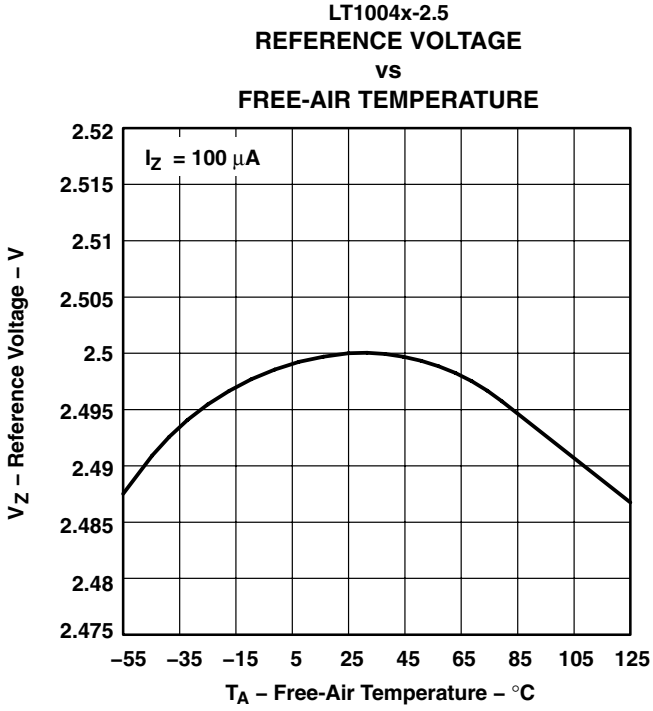

Figure 11

† Data at high and low temperatures are applicable only within the rated operating free-air temperature ranges of the various devices.

TYPICAL CHARACTERISTICS†

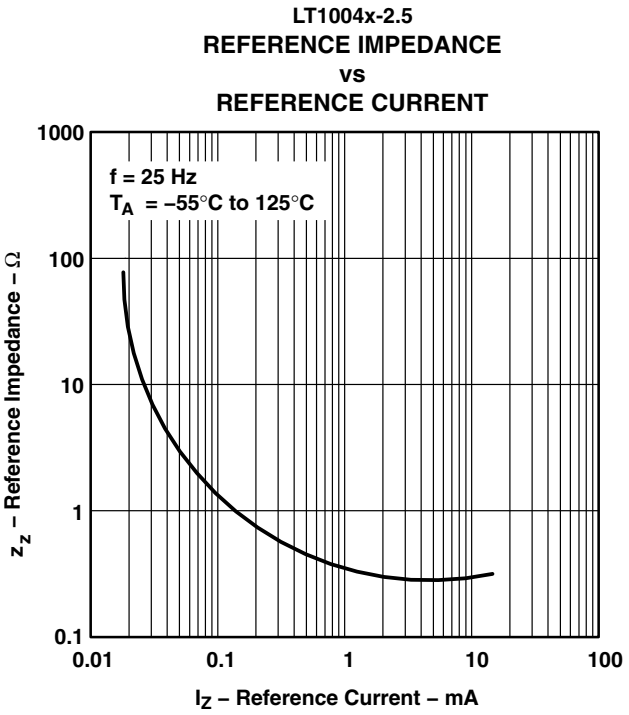

Figure 12

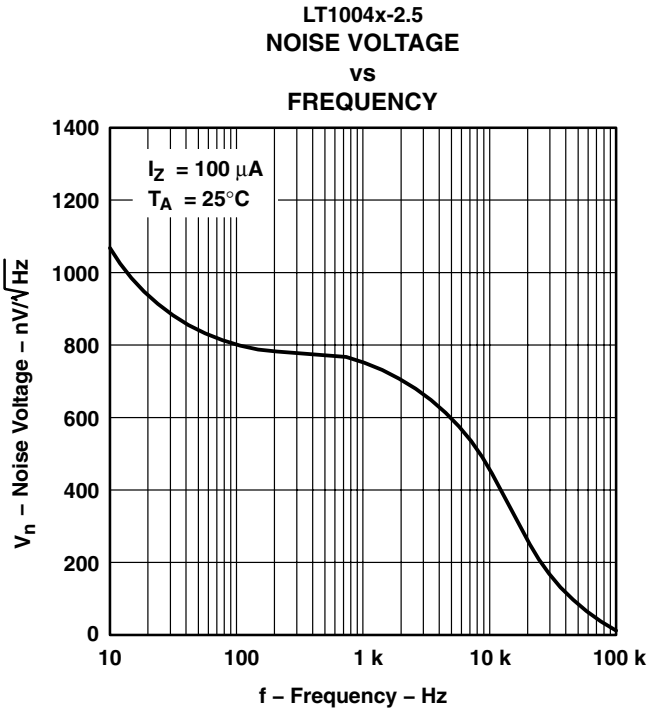

Figure 13

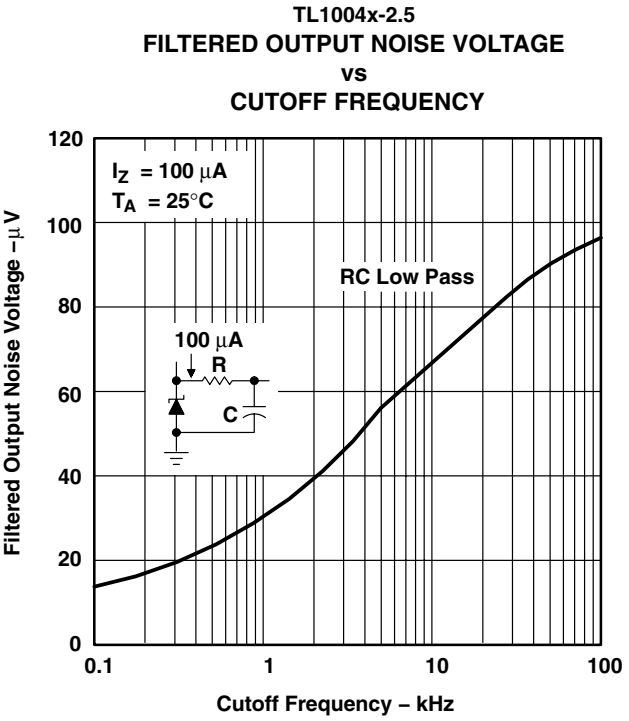

Figure 14

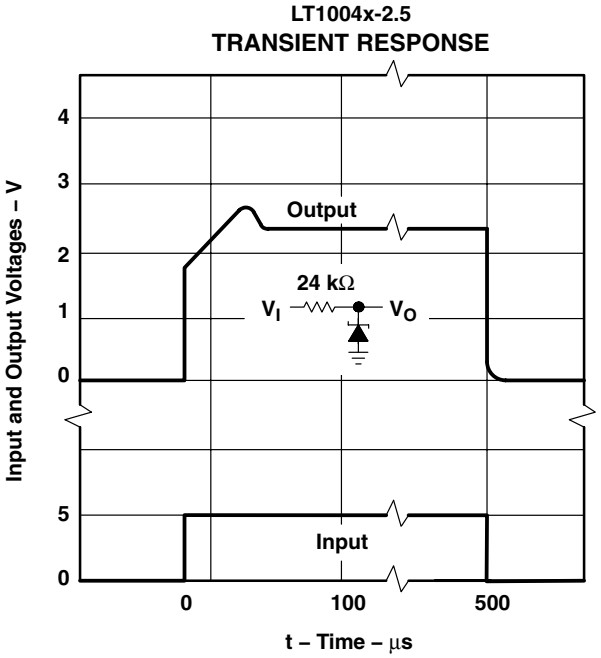

Figure 15

† Data at high and low temperatures are applicable only within the rated operating free-air temperature ranges of the various devices.

APPLICATION INFORMATION

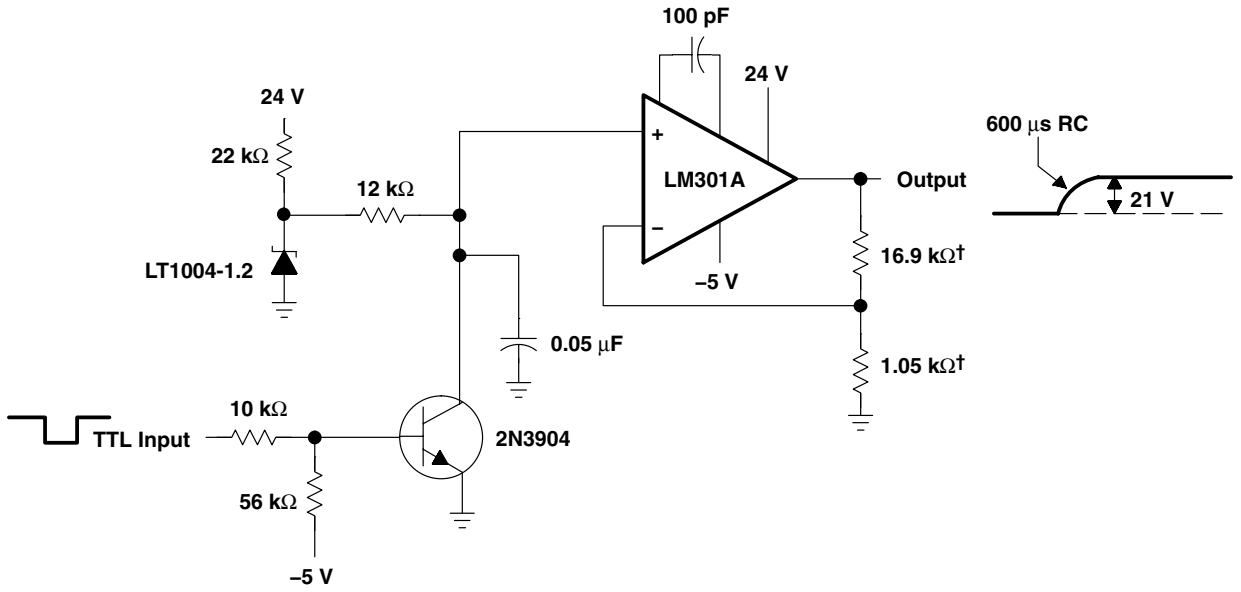

† 1% metal-film resistors

Figure 16. $V_{I(PP)}$ Generator for EPROMs (No Trim Required)

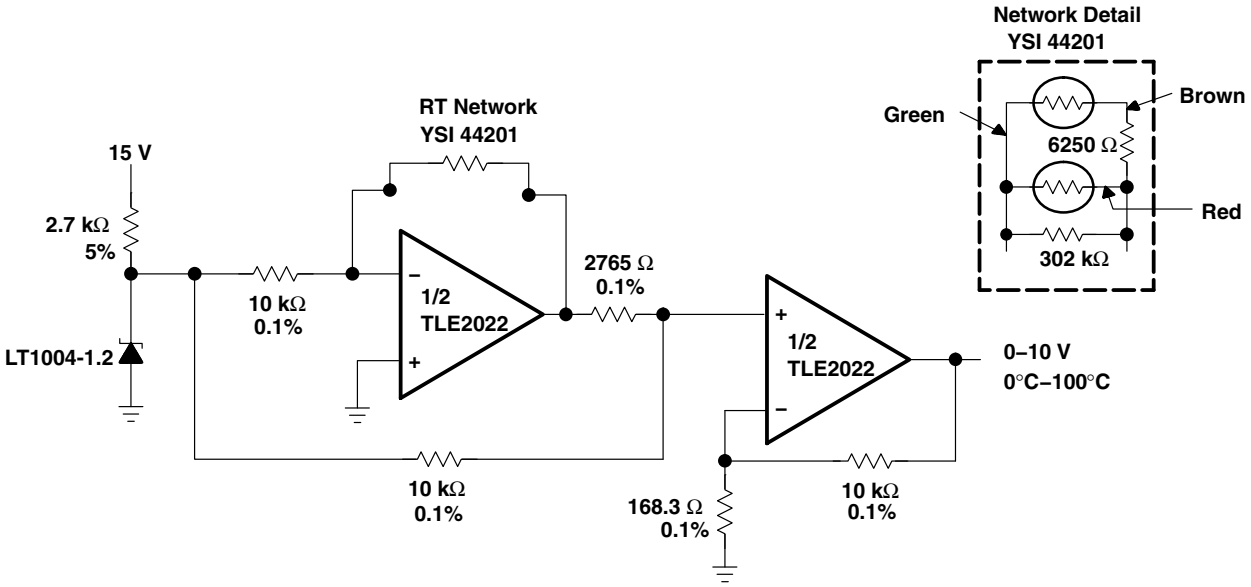

Figure 17. 0°C-to-100°C Linear-Output Thermometer

APPLICATION INFORMATION

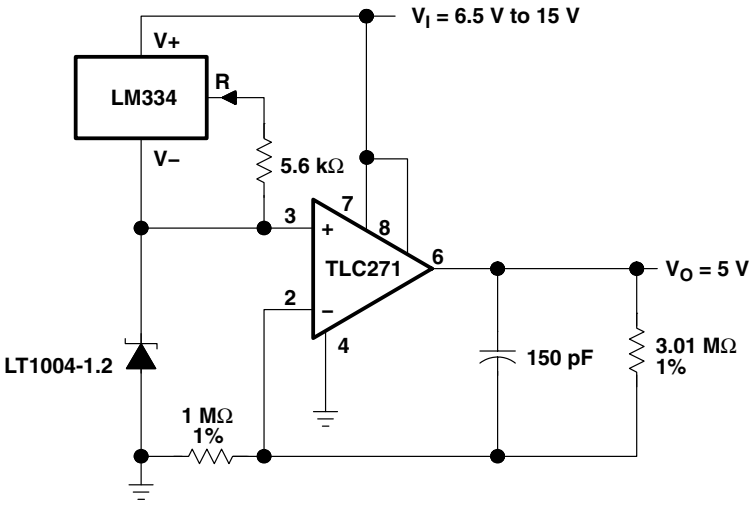

Figure 18. Micropower 5-V Reference

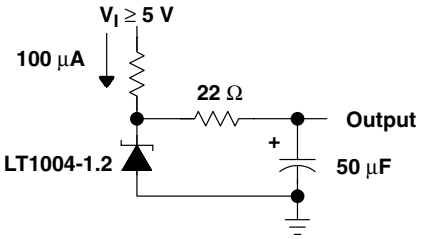

Figure 19. Low-Noise Reference

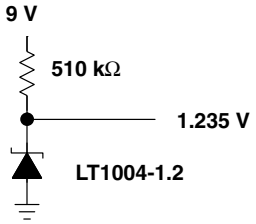

Figure 20. Micropower Reference From 9-V Battery

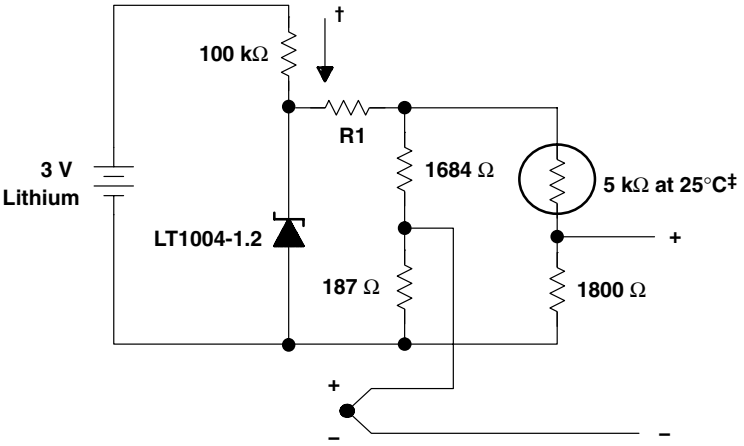

THERMOCOUPLE TYPE	R1
J	232 kΩ
K	298 kΩ
T	301 kΩ
S	2.1 MΩ

† Quiescent current ≅ 15 μA
‡ Yellow Springs Inst. Co., Part #44007
NOTE A: This application compensates within ±1°C from 0°C to 60°C.

Figure 21. Micropower Cold-Junction Compensation for Thermocouples

APPLICATION INFORMATION

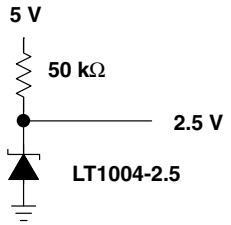

Figure 22. 2.5-V Reference

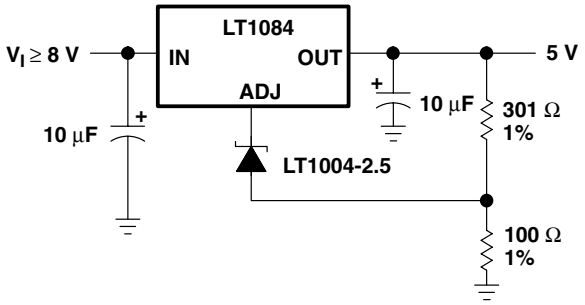

Figure 23. High-Stability 5-V Regulator

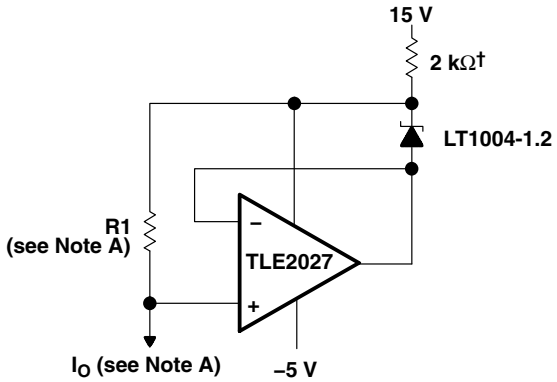

† May be increased for small output currents

NOTE A: $R1 \approx \frac{2\ V}{I_O + 10\ \mu A}$, $I_O = \frac{1.235\ V}{R1}$

Figure 24. Ground-Referenced Current Source

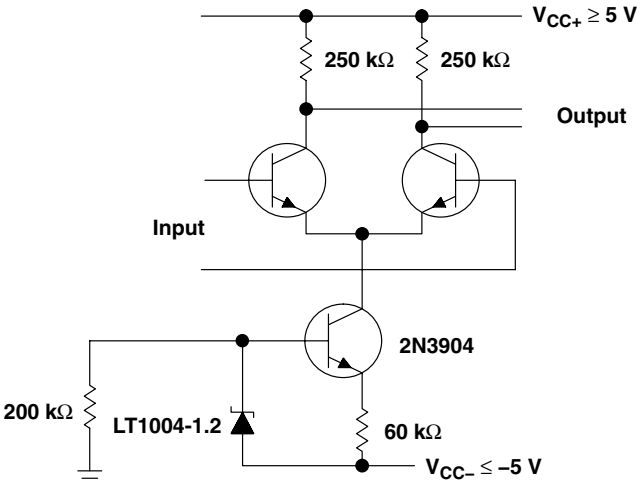

Figure 25. Amplifier With Constant Gain Over Temperature

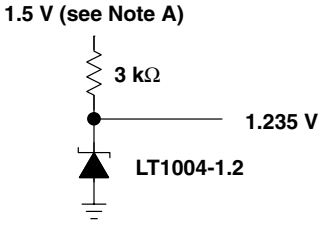

NOTE A: Output regulates down to 1.285 V for $I_O = 0$.

Figure 26. 1.2-V Reference From 1.5-V Battery

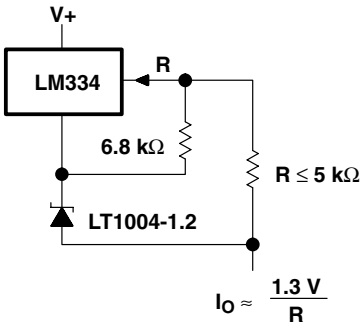

Figure 27. Terminal Current Source With Low Temperature Coefficient

APPLICATION INFORMATION

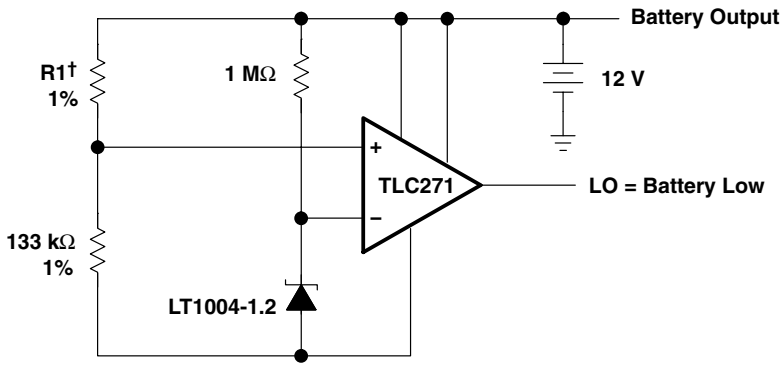

† R1 sets trip point, 60.4 kΩ per cell for 1.8 V per cell.

Figure 28. Lead-Acid Low-Battery-Voltage Detector

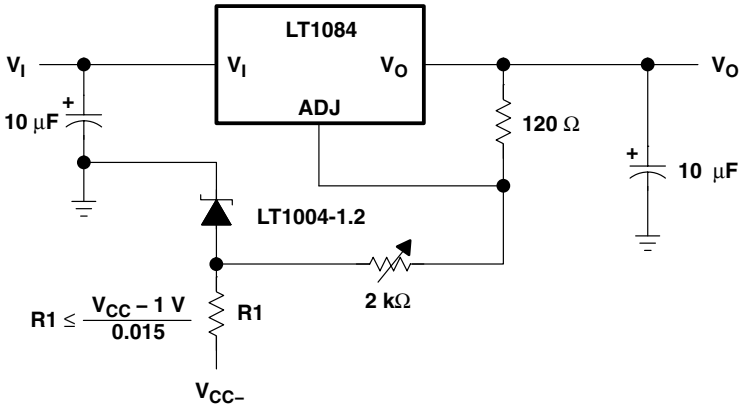

Figure 29. Variable-Voltage Supply

PACKAGING INFORMATION

Orderable part number	Status (1)	Material type (2)	Package | Pins	Package qty | Carrier	RoHS (3)	Lead finish/ Ball material (4)	MSL rating/ Peak reflow (5)	Op temp (°C)	Part marking (6)
LT1004CD-1-2	Active	Production	SOIC (D) | 8	75 | TUBE	Yes	NIPDAU	Level-1-260C-UNLIM	-	4C-12
LT1004CD-1-2.A	Active	Production	SOIC (D) | 8	75 | TUBE	Yes	NIPDAU	Level-1-260C-UNLIM	-40 to 85	4C-12
LT1004CD-2-5	Active	Production	SOIC (D) | 8	75 | TUBE	Yes	NIPDAU	Level-1-260C-UNLIM	-	4C-25
LT1004CD-2-5.A	Active	Production	SOIC (D) | 8	75 | TUBE	Yes	NIPDAU	Level-1-260C-UNLIM	-40 to 85	4C-25
LT1004CDR-1-2	Active	Production	SOIC (D) | 8	2500 | LARGE T&R	Yes	NIPDAU	Level-1-260C-UNLIM	-	4C-12
LT1004CDR-1-2.A	Active	Production	SOIC (D) | 8	2500 | LARGE T&R	Yes	NIPDAU	Level-1-260C-UNLIM	-40 to 85	4C-12
LT1004CDR-2-5	Active	Production	SOIC (D) | 8	2500 | LARGE T&R	Yes	NIPDAU	Level-1-260C-UNLIM	-	4C-25
LT1004CDR-2-5.A	Active	Production	SOIC (D) | 8	2500 | LARGE T&R	Yes	NIPDAU	Level-1-260C-UNLIM	-40 to 85	4C-25
LT1004CPW-1-2	Active	Production	TSSOP (PW) | 8	150 | TUBE	Yes	NIPDAU	Level-1-260C-UNLIM	-40 to 85	4C-12
LT1004CPW-1-2.A	Active	Production	TSSOP (PW) | 8	150 | TUBE	Yes	NIPDAU	Level-1-260C-UNLIM	-40 to 85	4C-12
LT1004CPWR-1-2	Active	Production	TSSOP (PW) | 8	2000 | LARGE T&R	Yes	NIPDAU	Level-1-260C-UNLIM	0 to 70	4C-12
LT1004CPWR-1-2.A	Active	Production	TSSOP (PW) | 8	2000 | LARGE T&R	Yes	NIPDAU	Level-1-260C-UNLIM	0 to 70	4C-12
LT1004CPWR-2-5	Active	Production	TSSOP (PW) | 8	2000 | LARGE T&R	Yes	NIPDAU	Level-1-260C-UNLIM	0 to 70	4C-25
LT1004CPWR-2-5.A	Active	Production	TSSOP (PW) | 8	2000 | LARGE T&R	Yes	NIPDAU	Level-1-260C-UNLIM	0 to 70	4C-25
LT1004ID-1-2	Active	Production	SOIC (D) | 8	75 | TUBE	Yes	NIPDAU	Level-1-260C-UNLIM	-	4I-12
LT1004ID-1-2.A	Active	Production	SOIC (D) | 8	75 | TUBE	Yes	NIPDAU	Level-1-260C-UNLIM	-40 to 85	4I-12
LT1004ID-2-5	Active	Production	SOIC (D) | 8	75 | TUBE	Yes	NIPDAU	Level-1-260C-UNLIM	-	4I-25
LT1004ID-2-5.A	Active	Production	SOIC (D) | 8	75 | TUBE	Yes	NIPDAU	Level-1-260C-UNLIM	-40 to 85	4I-25
LT1004IDR-1-2	Active	Production	SOIC (D) | 8	2500 | LARGE T&R	Yes	NIPDAU	Level-1-260C-UNLIM	-40 to 85	4I-12
LT1004IDR-1-2.A	Active	Production	SOIC (D) | 8	2500 | LARGE T&R	Yes	NIPDAU	Level-1-260C-UNLIM	-40 to 85	4I-12
LT1004IDR-2-5	Active	Production	SOIC (D) | 8	2500 | LARGE T&R	Yes	NIPDAU	Level-1-260C-UNLIM	-	4I-25
LT1004IDR-2-5.A	Active	Production	SOIC (D) | 8	2500 | LARGE T&R	Yes	NIPDAU	Level-1-260C-UNLIM	-40 to 85	4I-25
LT1004IPW-1-2	Active	Production	TSSOP (PW) | 8	150 | TUBE	Yes	NIPDAU	Level-1-260C-UNLIM	-40 to 85	4I-12
LT1004IPW-1-2.A	Active	Production	TSSOP (PW) | 8	150 | TUBE	Yes	NIPDAU	Level-1-260C-UNLIM	-40 to 85	4I-12
LT1004IPW-2-5	Active	Production	TSSOP (PW) | 8	150 | TUBE	Yes	NIPDAU	Level-1-260C-UNLIM	-40 to 85	4I-25
LT1004IPW-2-5.A	Active	Production	TSSOP (PW) | 8	150 | TUBE	Yes	NIPDAU	Level-1-260C-UNLIM	-40 to 85	4I-25
LT1004IPWR-1-2	Active	Production	TSSOP (PW) | 8	2000 | LARGE T&R	Yes	NIPDAU	Level-1-260C-UNLIM	-40 to 85	4I-12
LT1004IPWR-1-2.A	Active	Production	TSSOP (PW) | 8	2000 | LARGE T&R	Yes	NIPDAU	Level-1-260C-UNLIM	-40 to 85	4I-12
LT1004IPWR-2-5	Active	Production	TSSOP (PW) | 8	2000 | LARGE T&R	Yes	NIPDAU	Level-1-260C-UNLIM	-40 to 85	4I-25

Orderable part number	Status (1)	Material type (2)	Package | Pins	Package qty | Carrier	RoHS (3)	Lead finish/ Ball material (4)	MSL rating/ Peak reflow (5)	Op temp (°C)	Part marking (6)
LT1004IPWR-2-5.A	Active	Production	TSSOP (PW) | 8	2000 | LARGE T&R	Yes	NIPDAU	Level-1-260C-UNLIM	-40 to 85	4I-25

(1) **Status:** For more details on status, see our product life cycle.

(2) **Material type:** When designated, preproduction parts are prototypes/experimental devices, and are not yet approved or released for full production. Testing and final process, including without limitation quality assurance, reliability performance testing, and/or process qualification, may not yet be complete, and this item is subject to further changes or possible discontinuation. If available for ordering, purchases will be subject to an additional waiver at checkout, and are intended for early internal evaluation purposes only. These items are sold without warranties of any kind.

(3) **RoHS values:** Yes, No, RoHS Exempt. See the TI RoHS Statement for additional information and value definition.

(4) **Lead finish/Ball material:** Parts may have multiple material finish options. Finish options are separated by a vertical ruled line. Lead finish/Ball material values may wrap to two lines if the finish value exceeds the maximum column width.

(5) **MSL rating/Peak reflow:** The moisture sensitivity level ratings and peak solder (reflow) temperatures. In the event that a part has multiple moisture sensitivity ratings, only the lowest level per JEDEC standards is shown. Refer to the shipping label for the actual reflow temperature that will be used to mount the part to the printed circuit board.

(6) **Part marking:** There may be an additional marking, which relates to the logo, the lot trace code information, or the environmental category of the part.

Multiple part markings will be inside parentheses. Only one part marking contained in parentheses and separated by a "~" will appear on a part. If a line is indented then it is a continuation of the previous line and the two combined represent the entire part marking for that device.

Important Information and Disclaimer: The information provided on this page represents TI's knowledge and belief as of the date that it is provided. TI bases its knowledge and belief on information provided by third parties, and makes no representation or warranty as to the accuracy of such information. Efforts are underway to better integrate information from third parties. TI has taken and continues to take reasonable steps to provide representative and accurate information but may not have conducted destructive testing or chemical analysis on incoming materials and chemicals. TI and TI suppliers consider certain information to be proprietary, and thus CAS numbers and other limited information may not be available for release.

In no event shall TI's liability arising out of such information exceed the total purchase price of the TI part(s) at issue in this document sold by TI to Customer on an annual basis.

TAPE AND REEL INFORMATION

REEL DIMENSIONS

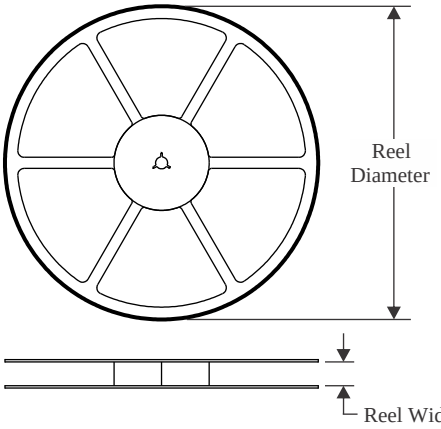

TAPE DIMENSIONS

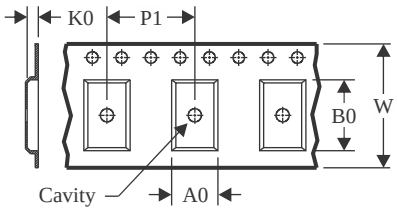

A0	Dimension designed to accommodate the component width
B0	Dimension designed to accommodate the component length
K0	Dimension designed to accommodate the component thickness
W	Overall width of the carrier tape
P1	Pitch between successive cavity centers

QUADRANT ASSIGNMENTS FOR PIN 1 ORIENTATION IN TAPE

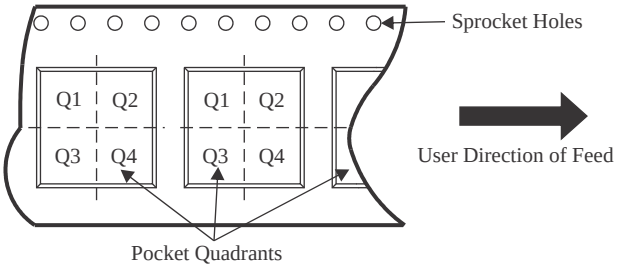

*All dimensions are nominal

Device	Package Type	Package Drawing	Pins	SPQ	Reel Diameter (mm)	Reel Width W1 (mm)	A0 (mm)	B0 (mm)	K0 (mm)	P1 (mm)	W (mm)	Pin1 Quadrant
LT1004CDR-1-2	SOIC	D	8	2500	330.0	12.4	6.4	5.2	2.1	8.0	12.0	Q1
LT1004CDR-2-5	SOIC	D	8	2500	330.0	12.4	6.4	5.2	2.1	8.0	12.0	Q1
LT1004CPWR-1-2	TSSOP	PW	8	2000	330.0	12.4	7.0	3.6	1.6	8.0	12.0	Q1
LT1004CPWR-2-5	TSSOP	PW	8	2000	330.0	12.4	7.0	3.6	1.6	8.0	12.0	Q1
LT1004IDR-1-2	SOIC	D	8	2500	330.0	12.4	6.4	5.2	2.1	8.0	12.0	Q1
LT1004IDR-2-5	SOIC	D	8	2500	330.0	12.4	6.4	5.2	2.1	8.0	12.0	Q1
LT1004IPWR-1-2	TSSOP	PW	8	2000	330.0	12.4	7.0	3.6	1.6	8.0	12.0	Q1
LT1004IPWR-2-5	TSSOP	PW	8	2000	330.0	12.4	7.0	3.6	1.6	8.0	12.0	Q1

TAPE AND REEL BOX DIMENSIONS

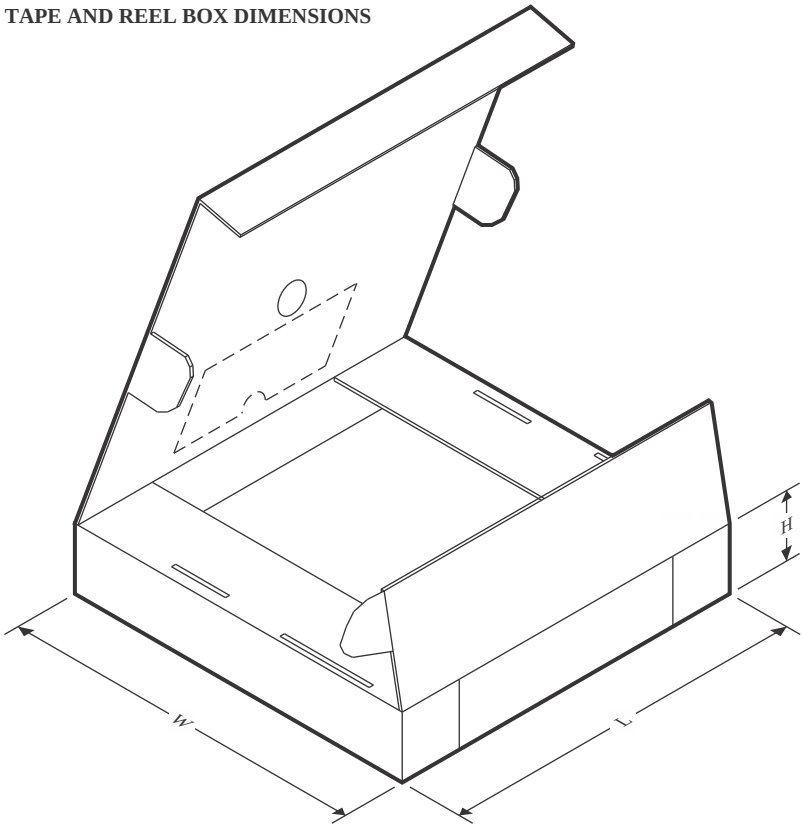

*All dimensions are nominal

Device	Package Type	Package Drawing	Pins	SPQ	Length (mm)	Width (mm)	Height (mm)
LT1004CDR-1-2	SOIC	D	8	2500	353.0	353.0	32.0
LT1004CDR-2-5	SOIC	D	8	2500	353.0	353.0	32.0
LT1004CPWR-1-2	TSSOP	PW	8	2000	353.0	353.0	32.0
LT1004CPWR-2-5	TSSOP	PW	8	2000	353.0	353.0	32.0
LT1004IDR-1-2	SOIC	D	8	2500	353.0	353.0	32.0
LT1004IDR-2-5	SOIC	D	8	2500	353.0	353.0	32.0
LT1004IPWR-1-2	TSSOP	PW	8	2000	353.0	353.0	32.0
LT1004IPWR-2-5	TSSOP	PW	8	2000	353.0	353.0	32.0

TUBE

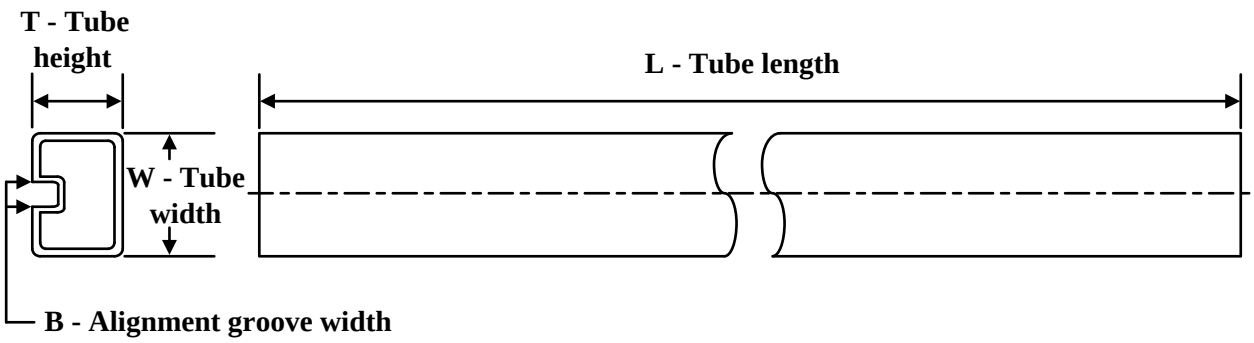

*All dimensions are nominal

Device	Package Name	Package Type	Pins	SPQ	L (mm)	W (mm)	T (µm)	B (mm)
LT1004CD-1-2	D	SOIC	8	75	506.6	8	3940	4.32
LT1004CD-1-2	D	SOIC	8	75	507	8	3940	4.32
LT1004CD-1-2.A	D	SOIC	8	75	506.6	8	3940	4.32
LT1004CD-1-2.A	D	SOIC	8	75	507	8	3940	4.32
LT1004CD-2-5	D	SOIC	8	75	507	8	3940	4.32
LT1004CD-2-5.A	D	SOIC	8	75	507	8	3940	4.32
LT1004CPW-1-2	PW	TSSOP	8	150	530	10.2	3600	3.5
LT1004CPW-1-2.A	PW	TSSOP	8	150	530	10.2	3600	3.5
LT1004ID-1-2	D	SOIC	8	75	507	8	3940	4.32
LT1004ID-1-2.A	D	SOIC	8	75	507	8	3940	4.32
LT1004ID-2-5	D	SOIC	8	75	507	8	3940	4.32
LT1004ID-2-5.A	D	SOIC	8	75	507	8	3940	4.32
LT1004IPW-1-2	PW	TSSOP	8	150	530	10.2	3600	3.5
LT1004IPW-1-2.A	PW	TSSOP	8	150	530	10.2	3600	3.5
LT1004IPW-2-5	PW	TSSOP	8	150	530	10.2	3600	3.5
LT1004IPW-2-5.A	PW	TSSOP	8	150	530	10.2	3600	3.5

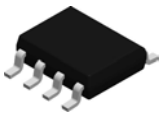

PACKAGE OUTLINE

D0008A

SOIC - 1.75 mm max height

SMALL OUTLINE INTEGRATED CIRCUIT

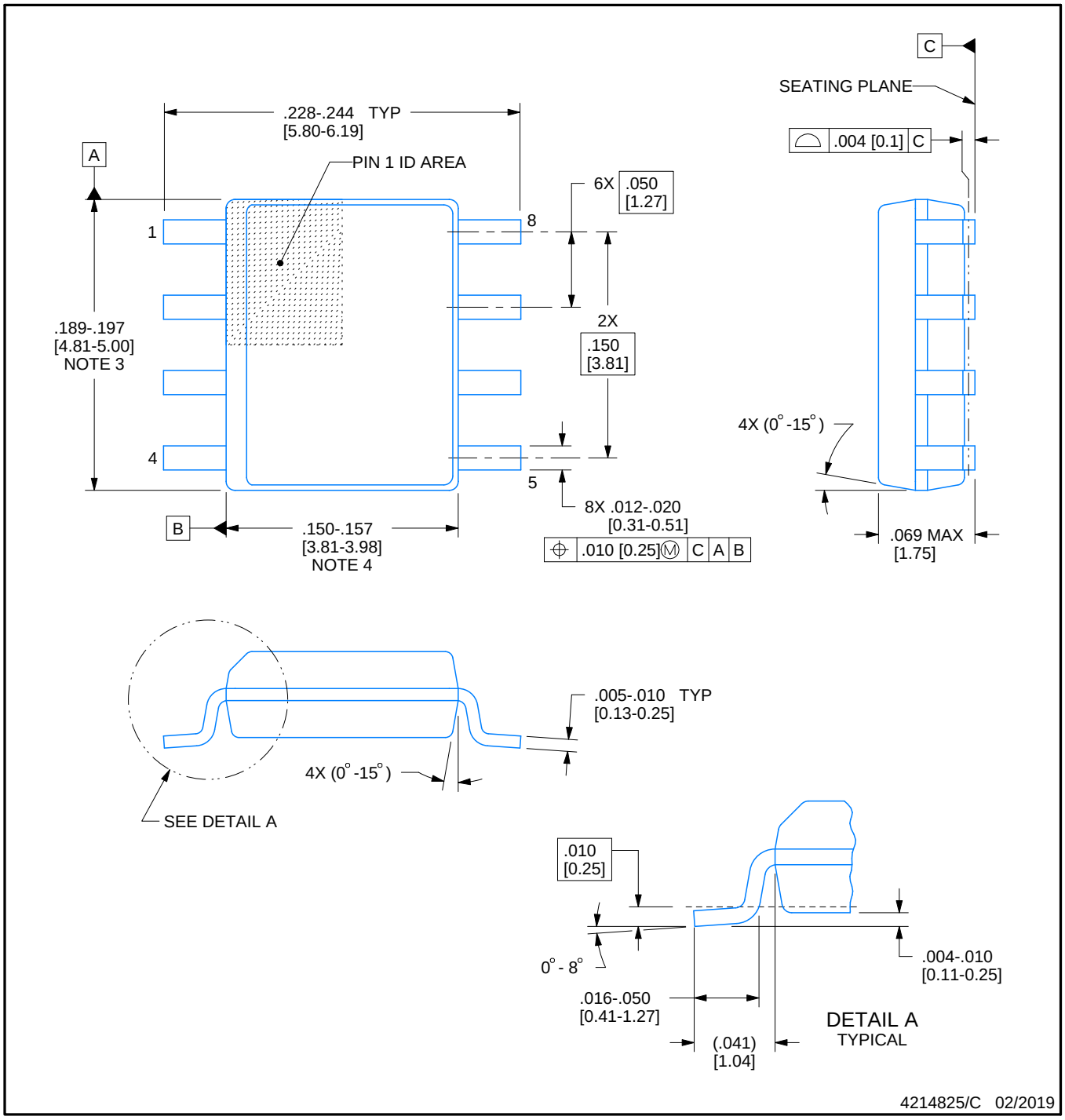

NOTES:

1. Linear dimensions are in inches [millimeters]. Dimensions in parenthesis are for reference only. Controlling dimensions are in inches. Dimensioning and tolerancing per ASME Y14.5M.
2. This drawing is subject to change without notice.
3. This dimension does not include mold flash, protrusions, or gate burrs. Mold flash, protrusions, or gate burrs shall not exceed .006 [0.15] per side.
4. This dimension does not include interlead flash.
5. Reference JEDEC registration MS-012, variation AA.

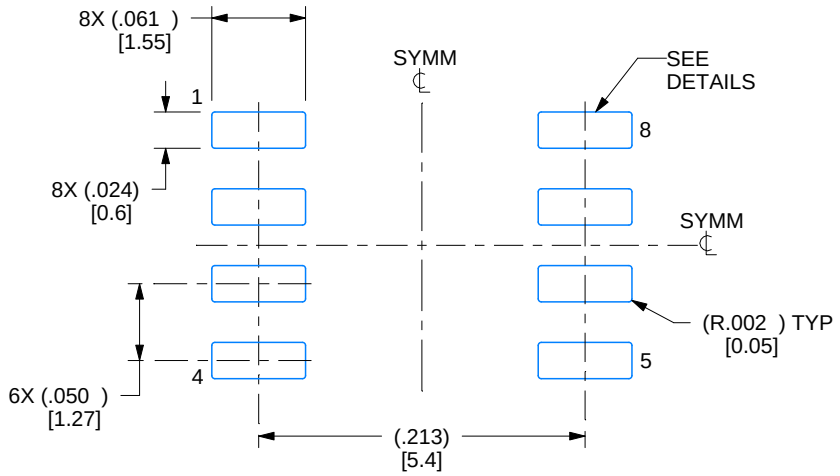

LAND PATTERN EXAMPLE
EXPOSED METAL SHOWN
SCALE:8X

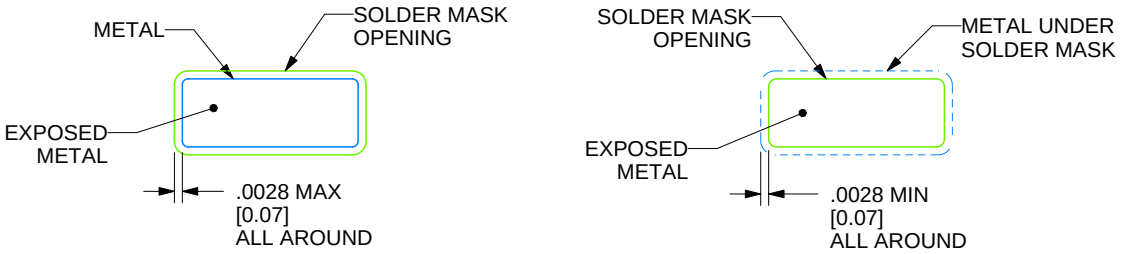

SOLDER MASK DETAILS

4214825/C 02/2019

NOTES: (continued)

6. Publication IPC-7351 may have alternate designs.
7. Solder mask tolerances between and around signal pads can vary based on board fabrication site.

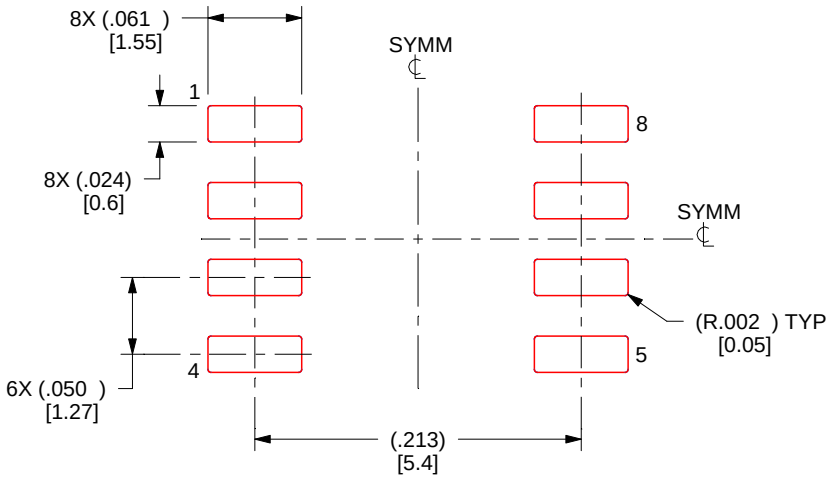

SOLDER PASTE EXAMPLE
BASED ON .005 INCH [0.125 MM] THICK STENCIL
SCALE:8X

4214825/C 02/2019

NOTES: (continued)

8. Laser cutting apertures with trapezoidal walls and rounded corners may offer better paste release. IPC-7525 may have alternate design recommendations.
9. Board assembly site may have different recommendations for stencil design.

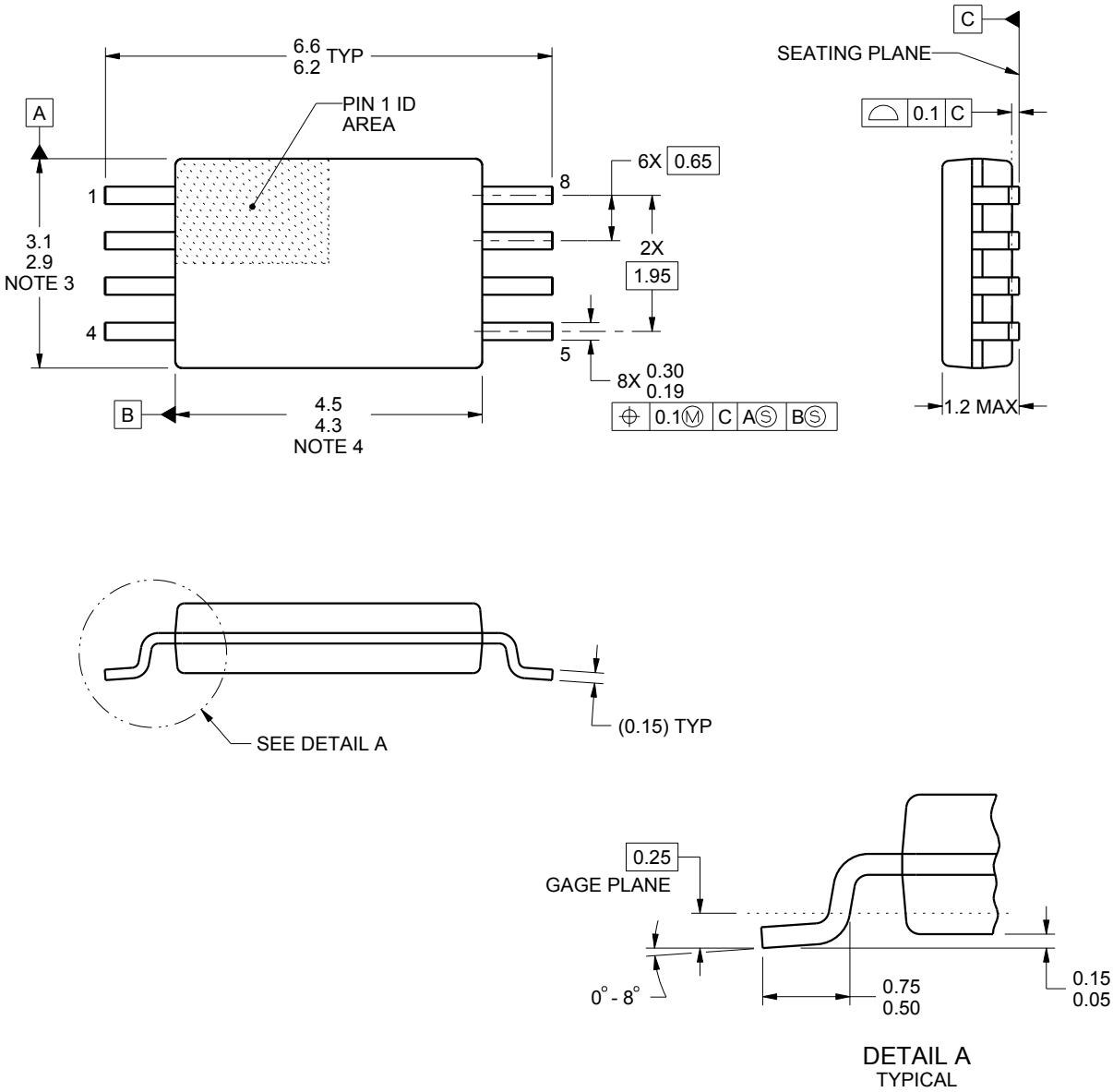

NOTES:

1. All linear dimensions are in millimeters. Any dimensions in parenthesis are for reference only. Dimensioning and tolerancing per ASME Y14.5M.
2. This drawing is subject to change without notice.
3. This dimension does not include mold flash, protrusions, or gate burrs. Mold flash, protrusions, or gate burrs shall not exceed 0.15 mm per side.
4. This dimension does not include interlead flash. Interlead flash shall not exceed 0.25 mm per side.
5. Reference JEDEC registration MO-153, variation AA.

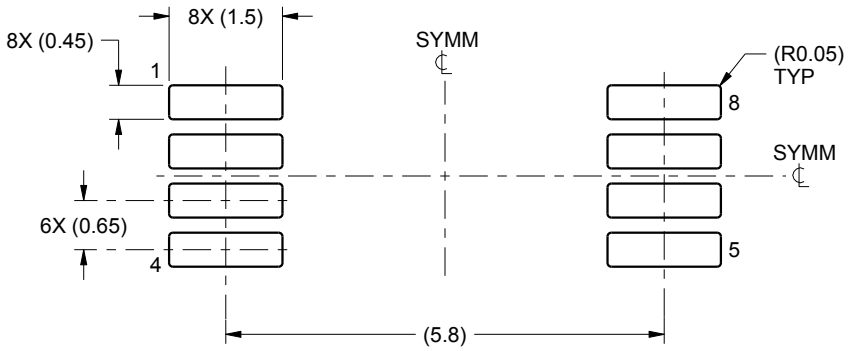

LAND PATTERN EXAMPLE
SCALE:10X

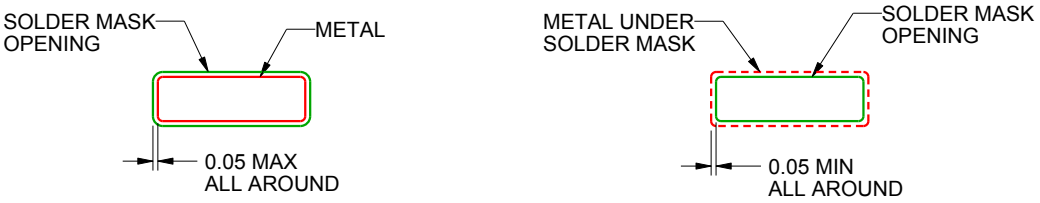

NON SOLDER MASK
DEFINED

SOLDER MASK
DEFINED

SOLDER MASK DETAILS
NOT TO SCALE

4221848/A 02/2015

NOTES: (continued)

6. Publication IPC-7351 may have alternate designs.
7. Solder mask tolerances between and around signal pads can vary based on board fabrication site.

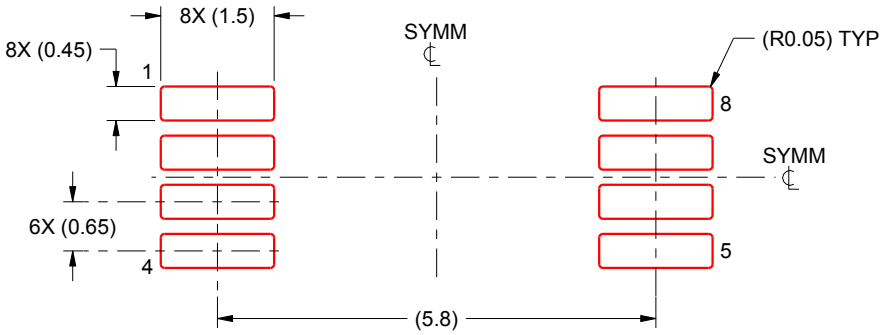

SOLDER PASTE EXAMPLE
BASED ON 0.125 mm THICK STENCIL
SCALE:10X

4221848/A 02/2015

NOTES: (continued)

8. Laser cutting apertures with trapezoidal walls and rounded corners may offer better paste release. IPC-7525 may have alternate design recommendations.
9. Board assembly site may have different recommendations for stencil design.

IMPORTANT NOTICE AND DISCLAIMER

TI PROVIDES TECHNICAL AND RELIABILITY DATA (INCLUDING DATASHEETS), DESIGN RESOURCES (INCLUDING REFERENCE DESIGNS), APPLICATION OR OTHER DESIGN ADVICE, WEB TOOLS, SAFETY INFORMATION, AND OTHER RESOURCES “AS IS” AND WITH ALL FAULTS, AND DISCLAIMS ALL WARRANTIES, EXPRESS AND IMPLIED, INCLUDING WITHOUT LIMITATION ANY IMPLIED WARRANTIES OF MERCHANTABILITY, FITNESS FOR A PARTICULAR PURPOSE OR NON-INFRINGEMENT OF THIRD PARTY INTELLECTUAL PROPERTY RIGHTS.

These resources are intended for skilled developers designing with TI products. You are solely responsible for (1) selecting the appropriate TI products for your application, (2) designing, validating and testing your application, and (3) ensuring your application meets applicable standards, and any other safety, security, regulatory or other requirements.

These resources are subject to change without notice. TI grants you permission to use these resources only for development of an application that uses the TI products described in the resource. Other reproduction and display of these resources is prohibited. No license is granted to any other TI intellectual property right or to any third party intellectual property right. TI disclaims responsibility for, and you fully indemnify TI and its representatives against any claims, damages, costs, losses, and liabilities arising out of your use of these resources.

TI’s products are provided subject to TI’s Terms of Sale, TI’s General Quality Guidelines, or other applicable terms available either on ti.com or provided in conjunction with such TI products. TI’s provision of these resources does not expand or otherwise alter TI’s applicable warranties or warranty disclaimers for TI products. Unless TI explicitly designates a product as custom or customer-specified, TI products are standard, catalog, general purpose devices.

TI objects to and rejects any additional or different terms you may propose.

Copyright © 2025, Texas Instruments Incorporated

Last updated 10/2025