DLP2010 .2 WVGA DMD

1 特長

- 対角 0.2 インチ (5.29mm) のマイクロミラー・アレイ
  - 直交レイアウトで 854 × 480 ピクセル・アレイを表示
  - マイクロミラー・ピッチ:5.4 ミクロン
  - マイクロミラー傾斜角:±17° (水平面に対して)
  - 側面照明による最適な効率と光学エンジン・サイズ
  - 偏波無依存のアルミニウム製マイクロミラー表面
- 4 ビットの SubLVDS 入力データ・バス
- 専用の DLPC3430 / DLPC3435 ディスプレイ・コントローラと、DLPA200x / DLPA3000 PMIC および LED ドライバによる信頼性の高い動作

2 アプリケーション

- 次のような製品の組み込みディスプレイ:
  - タブレット、携帯電話
  - 人工知能 (AI) アシスタント、スマート・スピーカ
- 制御パネル、セキュリティ・システム、サーモスタット
- ウェアラブル・ディスプレイ

3 概要

DLP2010 デジタル・マイクロミラー・デバイス (DMD) は、デジタル制御の MOEMS (micro-opto-electromechanical system) 空間光変調器 (SLM) です。この DMD を適切な光学システムと組み合わせることで、画像、映像、パターンを表示できます。このデバイスは、DLP2010 DMD、DLPC3430 / DLPC3435 コントローラ、DLPA200x / DLPA3000 PMIC/LED ドライバで構成されるチップセットの一部です。この DMD は小型であるため、小さな外形と低消費電力であることが重視される携帯機器に使用できます。小さなパッケージと、LED の小さなサイズが、スペースが制約される光エンジンに理想的です。

製品情報

部品番号 (1)	パッケージ	本体サイズ (公称)
DLP2010	FQJ (40)	15.9mm × 5.3mm

(1) 利用可能なすべてのパッケージについては、データシートの末尾にある注文情報を参照してください。

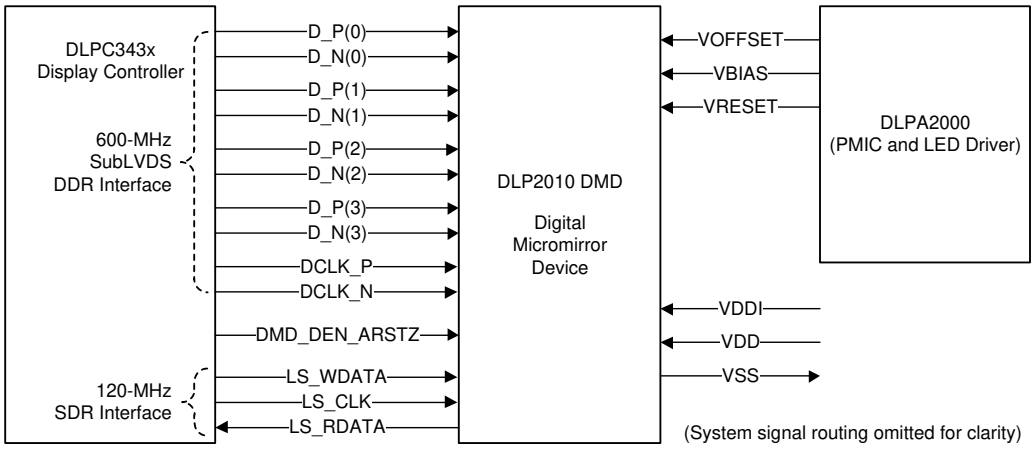

0.2 WVGA チップセット

英語版の TI 製品についての情報を翻訳したこの資料は、製品の概要を確認する目的で便宜的に提供しているものです。該当する正式な英語版の最新情報は、www.ti.com で閲覧でき、その内容が常に優先されます。TI では翻訳の正確性および妥当性につきましては一切保証いたしません。実際の設計などの前には、必ず最新版の英語版をご参照くださいますようお願いいたします。

Table of Contents

1 特長 ... 1
2 アプリケーション ... 1
3 概要 ... 1
4 Revision History ... 2
5 Pin Configuration and Functions ... 3
6 Specifications ... 6
6.1 Absolute Maximum Ratings ... 6
6.2 Storage Conditions ... 7
6.3 ESD Ratings ... 7
6.4 Recommended Operating Conditions ... 7
6.5 Thermal Information ... 9
6.6 Electrical Characteristics ... 9
6.7 Timing Requirements ... 11
6.8 Switching Characteristics ... 15
6.9 System Mounting Interface Loads ... 16
6.10 Physical Characteristics of the Micromirror Array ... 17
6.11 Micromirror Array Optical Characteristics ... 18
6.12 Window Characteristics ... 20
6.13 Chipset Component Usage Specification ... 20
6.14 Software Requirements ... 20
7 Detailed Description ... 21
7.1 Overview ... 21
7.2 Functional Block Diagram ... 21
7.3 Feature Description ... 22
7.4 Device Functional Modes ... 22
7.5 Optical Interface and System Image Quality Considerations ... 22
7.6 Micromirror Array Temperature Calculation ... 23
7.7 Micromirror Power Density Calculation ... 24
7.8 Micromirror Landed-On/Landed-Off Duty Cycle ... 26
8 Application and Implementation ... 30
8.1 Application Information ... 30
8.2 Typical Application ... 30
9 Power Supply Recommendations ... 33
9.1 DMD Power Supply Power-Up Procedure ... 33
9.2 DMD Power Supply Power-Down Procedure ... 33
9.3 Power Supply Sequencing Requirements ... 34
10 Layout ... 36
10.1 Layout Guidelines ... 36
10.2 Layout Example ... 36
11 Device and Documentation Support ... 38
11.1 Device Support ... 38
11.2 Related Links ... 38
11.3 ドキュメントの更新通知を受け取る方法 ... 38
11.4 サポート・リソース ... 39
11.5 Trademarks ... 39
11.6 静電気放電に関する注意事項 ... 39
11.7 用語集 ... 39
12 Mechanical, Packaging, and Orderable Information ... 40

4 Revision History

Changes from Revision B (May 2022) to Revision C (July 2023)	Page
• Added "ILLUMINATION" to *Recommended Operating Conditions*	7
• Updated *Micromirror Array Optical Characteristics* 図 6-17	18
• Updated *Micromirror Array Temperature Calculation*	23
• Added *Micromirror Power Density Calculation*	24

Changes from Revision A (January 2022) to Revision B (May 2022)	Page
• Updated Absolute Maximum Ratings disclosure to the latest TI standard	6
• Updated *Micromirror Array Optical Characteristics*	18
• Added *Third-Party Products Disclaimer*	38

Copyright © 2023 Texas Instruments Incorporated

5 Pin Configuration and Functions

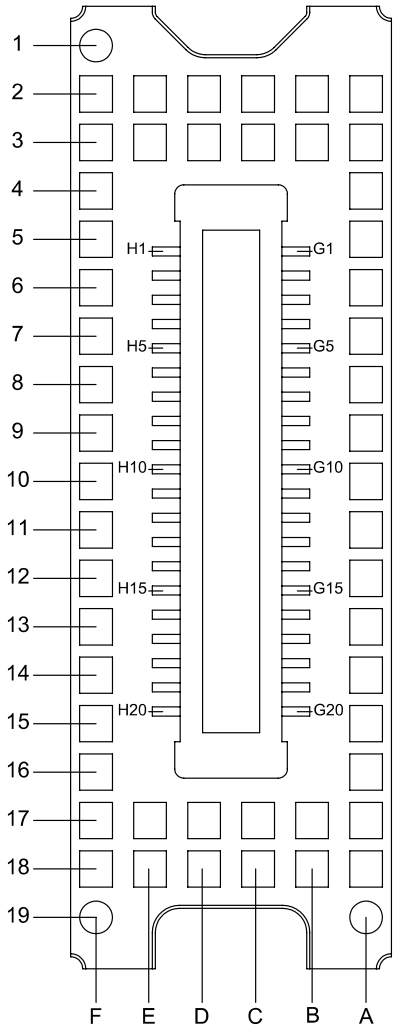

図 5-1. FQJ Package 40-Pin Connector Bottom View

表 5-1. Pin Functions – Connector Pins(1)

PIN		TYPE	SIGNAL	DATA RATE	DESCRIPTION	PACKAGE NET LENGTH(2) (mm)
NAME	NO.					
DATA INPUTS						
D_N(0)	G4	I	SubLVDS	Double	Data, Negative	7.03
D_P(0)	G3	I	SubLVDS	Double	Data, Positive	7.03
D_N(1)	G8	I	SubLVDS	Double	Data, Negative	7.03
D_P(1)	G7	I	SubLVDS	Double	Data, Positive	7.03
D_N(2)	H5	I	SubLVDS	Double	Data, Negative	7.02
D_P(2)	H6	I	SubLVDS	Double	Data, Positive	7.02
D_N(3)	H1	I	SubLVDS	Double	Data, Negative	7.00
D_P(3)	H2	I	SubLVDS	Double	Data, Positive	7.00
DCLK_N	H9	I	SubLVDS	Double	Clock, Negative	7.03
DCLK_P	H10	I	SubLVDS	Double	Clock, Positive	7.03
CONTROL INPUTS						

Copyright © 2023 Texas Instruments Incorporated

表 5-1. Pin Functions – Connector Pins(1) (continued)

PIN		TYPE	SIGNAL	DATA RATE	DESCRIPTION	PACKAGE NET LENGTH(2) (mm)
NAME	NO.					
DMD_DEN_ARSTZ	G12	I	LPSDR(1)		Asynchronous reset DMD signal. A low signal places the DMD in reset. A high signal releases the DMD from reset and places it in active mode.	5.72
LS_CLK	G19	I	LPSDR	Single	Clock for low-speed interface	3.54
LS_WDATA	G18	I	LPSDR	Single	Write data for low-speed interface	3.54
LS_RDATA	G11	O	LPSDR	Single	Read data for low-speed interface	8.11
POWER						
VBIAS(3)	H17	Power			Supply voltage for positive bias level at micromirrors	
VOFFSET(3)	H13	Power			Supply voltage for HVCMOS core logic. Includes: supply voltage for stepped high level at micromirror address electrodes and supply voltage for offset level at micromirrors	
VRESET(3)	H18	Power			Supply voltage for negative reset level at micromirrors	
VDD(3)	G20	Power			Supply voltage for micromirror low voltage CMOS core logic includes supply voltage for LPSDR inputs and supply voltage for normal high level at micromirror address electrodes.	
VDD	H14	Power				
VDD	H15	Power				
VDD	H16	Power				
VDD	H19	Power				
VDD	H20	Power				
VDDI(3)	G1	Power			Supply voltage for SubLVDS receivers	
VDDI	G2	Power				
VDDI	G5	Power				
VDDI	G6	Power				
VSS(3)	G9	Ground			Ground. Common return for all power.	
VSS	G10	Ground				
VSS	G13	Ground				
VSS	G14	Ground				
VSS	G15	Ground				
VSS	G16	Ground				
VSS	G17	Ground				
VSS	H3	Ground				
VSS	H4	Ground				
VSS	H7	Ground				
VSS	H8	Ground				
VSS	H11	Ground				
VSS	H12	Ground				

(1) Low speed interface is LPSDR and adheres to the Electrical Characteristics and AC/DC Operating Conditions table in JEDEC Standard No. 209B, *Low Power Double Data Rate (LPDDR)* JESD209B.
(2) Net trace lengths inside the package:
Relative dielectric constant for the FQJ ceramic package is 9.8.
Propagation speed = 11.8 / sqrt(9.8) = 3.769 inches/ns.
Propagation delay = 0.265 ns/inch = 265 ps/inch = 10.43 ps/mm.
(3) The following power supplies are all required to operate the DMD: VSS, VDD, VDDI, VOFFSET, VBIAS, VRESET.

Copyright © 2023 Texas Instruments Incorporated

表 5-2. Pin Functions – Test Pads

NUMBER	SYSTEM BOARD	NUMBER	SYSTEM BOARD
A2	Do not connect	D2	Do not connect
A3	Do not connect	D3	Do not connect
A4	Do not connect	D17	Do not connect
A5	Do not connect	D18	Do not connect
A6	Do not connect		
A7	Do not connect	E2	Do not connect
A8	Do not connect	E3	Do not connect
A9	Do not connect	E17	Do not connect
A10	Do not connect	E18	Do not connect
A11	Do not connect		
A12	Do not connect	F1	Do not connect
A13	Do not connect	F2	Do not connect
A14	Do not connect	F3	Do not connect
A15	Do not connect	F4	Do not connect
A16	Do not connect	F5	Do not connect
A17	Do not connect	F6	Do not connect
A18	Do not connect	F7	Do not connect
A19	Do not connect	F8	Do not connect
		F9	Do not connect
B2	Do not connect	F10	Do not connect
B3	Do not connect	F11	Do not connect
B17	Do not connect	F12	Do not connect
B18	Do not connect	F13	Do not connect
		F14	Do not connect
C2	Do not connect	F15	Do not connect
C3	Do not connect	F16	Do not connect
C17	Do not connect	F17	Do not connect
C18	Do not connect	F18	Do not connect
		F19	Do not connect

Copyright © 2023 Texas Instruments Incorporated

6 Specifications

6.1 Absolute Maximum Ratings

See (1)

			MIN	MAX	UBIT
Supply voltage	VDD	for LVCMOS core logic(2) Supply voltage for LPSDR low speed interface	–0.5	2.3	V
	VDDI	for SubLVDS receivers(2)	–0.5	2.3	
	VOFFSET	for HVCMOS and micromirror electrode(2) (3)	–0.5	10.6	
	VBIAS	for micromirror electrode(2)	–0.5	19	
	VRESET	for micromirror electrode(2)	–15	0.5	
	| VDDI–VDD |	delta (absolute value)(4)		0.3	
	| VBIAS–VOFFSET |	delta (absolute value)(5)		11	
	| VBIAS–VRESET |	delta (absolute value)(6)		34	
Input voltage	for other inputs LPSDR(2)		–0.5	VDD + 0.5	V
	for other inputs SubLVDS(2) (7)		–0.5	VDDI + 0.5	
Input pins	| VID |	SubLVDS input differential voltage (absolute value)(7)		810	mV
	IID	SubLVDS input differential current		8.1	mA
Clock frequency	f_{clock}	Clock frequency for low speed interface LS_CLK		130	MHz
	f_{clock}	Clock frequency for high speed interface DCLK		620	
Environmental	T_{ARRAY} and T_{WINDOW}	Temperature – operational(8)	–20	90	°C
		Temperature – non-operational(8)	–40	90	
	T_{DP}	Dew Point Temperature - operating and non-operating (non-condensing)		81	
	$\|T_{DELTA}\|$	Absolute Temperature delta between any point on the window edge and the ceramic test point TP1(9)		30	

(1) Operation outside the Absolute Maximum Ratings may cause permanent device damage. Absolute Maximum Ratings do not imply functional operation of the device at these or any other conditions beyond those listed under Recommended Operating Conditions. If used outside the Recommended Operating Conditions but within the Absolute Maximum Ratings, the device may not be fully functional, and this may affect device reliability, functionality, performance, and shorten the device lifetime.
(2) All voltage values are with respect to the ground terminals (VSS). The following power supplies are all required to operate the DMD: VSS, VDD, VDDI, VOFFSET, VBIAS, and VRESET.
(3) VOFFSET supply transients must fall within specified voltages.
(4) Exceeding the recommended allowable absolute voltage difference between VDDI and VDD may result in excessive current draw.
(5) Exceeding the recommended allowable absolute voltage difference between VBIAS and VOFFSET may result in excessive current draw.
(6) Exceeding the recommended allowable absolute voltage difference between VBIAS and VRESET may result in excessive current draw.
(7) This maximum input voltage rating applies when each input of a differential pair is at the same voltage potential. Sub-LVDS differential inputs must not exceed the specified limit or damage may result to the internal termination resistors.
(8) The highest temperature of the active array (as calculated by the *セクション 7.6)*, or of any point along the Window Edge as defined in 図 7-1. The locations of thermal test points TP2 and TP3 in 図 7-1 are intended to measure the highest window edge temperature. If a particular application causes another point on the window edge to be at a higher temperature, that point should be used.
(9) Temperature delta is the highest difference between the ceramic test point 1 (TP1) and anywhere on the window edge as shown in 図 7-1. The window test points TP2 and TP3 shown in 図 7-1 are intended to result in the worst case delta. If a particular application causes another point on the window edge to result in a larger delta temperature, that point should be used.

Copyright © 2023 Texas Instruments Incorporated

6.2 Storage Conditions

applicable for the DMD as a component or non-operational in a system

		MIN	MAX	UNIT
T_{DMD}	DMD storage temperature	–40	85	°C
T_{DP-AVG}	Average dew point temperature, (non-condensing)(1)		24	°C
T_{DP-ELR}	Elevated dew point temperature range, (non-condensing)(2)	28	36	°C
CT_{ELR}	Cumulative time in elevated dew point temperature range		6	Months

(1) The average over time (including storage and operating) that the device is not in the elevated dew point temperature range.
(2) Exposure to dew point temperatures in the elevated range during storage and operation should be limited to less than a total cumulative time of CT_{ELR}.

6.3 ESD Ratings

			VALUE	UNIT
$V_{(ESD)}$	Electrostatic discharge	Human body model (HBM), per ANSI/ESDA/JEDEC JS-001(1)	±2000	V

(1) JEDEC document JEP155 states that 500-V HBM allows safe manufacturing with a standard ESD control process.

6.4 Recommended Operating Conditions

over operating free-air temperature range (unless otherwise noted)(1) (2) (3)

		MIN	NOM	MAX	UNIT
SUPPLY VOLTAGE RANGE(4)					
VDD	Supply voltage for LVCMOS core logic Supply voltage for LPSDR low-speed interface	1.65	1.8	1.95	V
VDDI	Supply voltage for SubLVDS receivers	1.65	1.8	1.95	V
VOFFSET	Supply voltage for HVCMOS and micromirror electrode(5)	9.5	10	10.5	V
VBIAS	Supply voltage for mirror electrode	17.5	18	18.5	V
VRESET	Supply voltage for micromirror electrode	–14.5	–14	–13.5	V
|VDDI–VDD|	Supply voltage delta (absolute value)(6)			0.3	V
|VBIAS–VOFFSET|	Supply voltage delta (absolute value)(7)			10.5	V
|VBIAS–VRESET|	Supply voltage delta (absolute value)(8)			33	V
CLOCK FREQUENCY					
f_{clock}	Clock frequency for low speed interface LS_CLK(9)	108		120	MHz
f_{clock}	Clock frequency for high speed interface DCLK(10)	300		600	MHz
	Duty cycle distortion DCLK	44%		56%	
SUBLVDS INTERFACE(10)					
$\lvert V_{ID} \rvert$	SubLVDS input differential voltage (absolute value) , 図 6-8	150	250	350	mV
V_{CM}	Common mode voltage , 図 6-8	700	900	1100	mV
$V_{SUBLVDS}$	SubLVDS voltage , 図 6-8	575		1225	mV
Z_{LINE}	Line differential impedance (PWB/trace)	90	100	110	Ω
Z_{IN}	Internal differential termination resistance 図 6-10	80	100	120	Ω
	100-Ω differential PCB trace	6.35		152.4	mm

Copyright © 2023 Texas Instruments Incorporated

6.4 Recommended Operating Conditions (continued)

over operating free-air temperature range (unless otherwise noted)(1) (2) (3)

		MIN	NOM	MAX	UNIT
ENVIRONMENTAL					
T_{ARRAY}	Array Temperature – long-term operational(11) (12) (13) (14)	0		40 to 70(13)	°C
	Array Temperature - short-term operational, 25 hr max(12) (15)	–20		–10	
	Array Temperature - short-term operational, 500 hr max(12) (15)	–10		0	
	Array Temperature – short-term operational, 500 hr max(12) (15)	70		75	
$\lvert T_{DELTA} \rvert$	Absolute Temperature difference between any point on the window edge and the ceramic test point TP1 (16)			15	°C
T_{WINDOW}	Window temperature – operational(11) (17)			90	°C
T_{DP-AVG}	Average dew point temperature (non-condensing)(18)			24	°C
T_{DP-ELR}	Elevated dew point temperature range (non-condensing)(19)	28		36	°C
CT_{ELR}	Cumulative time in elevated dew point temperature range			6	Months
ILLUMINATION					
ILL_{UV}	Illumination power at wavelengths < 410 nm(11)			10	mW/cm^2
ILL_{VIS}	Illumination power at wavelengths ≥ 410 nm and ≤ 800 nm(21)			26.1	W/cm^2
ILL_{IR}	Illumination power at wavelengths > 800 nm			10	mW/cm^2
ILL_{BLU}	Illumination power at wavelengths ≥ 410 nm and ≤ 475 nm(21)			8.3	W/cm^2
ILL_{BLU1}	Illumination power at wavelengths ≥ 410 nm and ≤ 445 nm(21)			1.5	W/cm2
ILL_{θ}	Illumination marginal ray angle(20)			55	deg

(1) *セクション 6.4* are applicable after the DMD is installed in the final product.
(2) The functional performance of the device specified in this datasheet is achieved when operating the device within the limits defined by the *セクション 6.4*. No level of performance is implied when operating the device above or below the *セクション 6.4* limits.
(3) The following power supplies are all required to operate the DMD: VSS, VDD, VDDI, VOFFSET, VBIAS, and VRESET.
(4) All voltage values are with respect to the ground pins (VSS).
(5) VOFFSET supply transients must fall within specified maximum voltages.
(6) To prevent excess current, the supply voltage delta |VDDI – VDD| must be less than specified limit.
(7) To prevent excess current, the supply voltage delta |VBIAS – VOFFSET| must be less than specified limit.
(8) To prevent excess current, the supply voltage delta |VBIAS – VRESET| must be less than specified limit.
(9) LS_CLK must run as specified to ensure internal DMD timing for reset waveform commands.
(10) Refer to the SubLVDS timing requirements in *セクション 6.7*.
(11) Simultaneous exposure of the DMD to the maximum *セクション 6.4* for temperature and UV illumination will reduce device lifetime.
(12) The array temperature cannot be measured directly and must be computed analytically from the temperature measured at test point 1 (TP1) shown in 図 7-1 and the Package Thermal Resistance using *セクション 7.6*.
(13) Per 図 6-1, the maximum operational array temperature should be derated based on the micromirror landed duty cycle that the DMD experiences in the end application. Refer to *セクション 7.8* for a definition of micromirror landed duty cycle.
(14) Long-term is defined as the usable life of the device
(15) Short-term is the total cumulative time over the useful life of the device.
(16) Temperature delta is the highest difference between the ceramic test point 1 (TP1) and anywhere on the window edge shown in 図 7-1. The window test points TP2 and TP3 shown in 図 7-1 are intended to result in the worst case delta temperature. If a particular application causes another point on the window edge to result in a larger delta temperature, that point should be used.
(17) Window temperature is the highest temperature on the window edge shown in 図 7-1. The locations of thermal test points TP2 and TP3 in 図 7-1 are intended to measure the highest window edge temperature. If a particular application causes another point on the window edge to result in a larger delta temperature, that point should be used.
(18) The average over time (including storage and operating) that the device is not in the elevated dew point temperature range.
(19) Exposure to dew point temperatures in the elevated range during storage and operation should be limited to less than a total cumulative time of CT_{ELR}.
(20) The maximum marginal ray angle of the incoming illumination light at any point in the micromirror array, including Pond of Micromirrors (POM), should not exceed 55 degrees from the normal to the device array plane. The device window aperture has not necessarily been designed to allow incoming light at higher maximum angles to pass to the micromirrors, and the device performance has not been tested nor qualified at angles exceeding this. Illumination light exceeding this angle outside the micromirror array (including POM) will contribute to thermal limitations described in this document, and may negatively affect lifetime.
(21) The maximum allowable optical power incident on the DMD is limited by the maximum optical power density for each wavelength range specified and the micromirror array temperature (T_{ARRAY}).

Copyright © 2023 Texas Instruments Incorporated

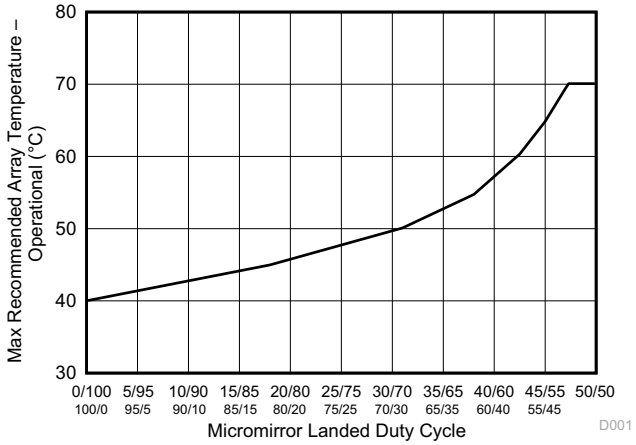

図 6-1. Maximum Recommended Array Temperature – Derating Curve

6.5 Thermal Information

THERMAL METRIC(1)	DLP2010 FQJ Package 40 PINS	UNIT
Thermal resistance Active area to test point 1 (TP1)(1)	7.9	°C/W

(1) The DMD is designed to conduct absorbed and dissipated heat to the back of the package. The cooling system must be capable of maintaining the package within the temperature range specified in the *セクション 6.4*. The total heat load on the DMD is largely driven by the incident light absorbed by the active area; although other contributions include light energy absorbed by the window aperture and electrical power dissipation of the array. Optical systems should be designed to minimize the light energy falling outside the window clear aperture since any additional thermal load in this area can significantly degrade the reliability of the device.

6.6 Electrical Characteristics

Over operating free-air temperature range (unless otherwise noted)(1)

PARAMETER		TEST CONDITIONS(2)	MIN	TYP	MAX	UNIT
CURRENT						
I_{DD}	Supply current: VDD(3) (4)	VDD = 1.95 V			34.7	mA
		VDD = 1.8 V		27.5		
I_{DDI}	Supply current: VDDI(3) (4)	VDDI = 1.95 V			9.4	mA
		VDD = 1.8 V		6.6		
I_{OFFSET}	Supply current: VOFFSET(5) (6)	VOFFSET = 10.5 V			1.7	mA
		VOFFSET = 10 V		0.9		
I_{BIAS}	Supply current: VBIAS(5) (6)	VBIAS = 18.5 V			0.4	mA
		VBIAS = 18 V		0.2		
I_{RESET}	Supply current: VRESET(6)	VRESET = –14.5 V			2	mA
		VRESET = –14 V		1.2		
POWER(7)						
P_{DD}	Supply power dissipation: VDD(3) (4)	VDD = 1.95 V			67.7	mW
		VDD = 1.8 V		49.5		
P_{DDI}	Supply power dissipation: VDDI(3) (4)	VDDI = 1.95 V			18.3	mW
		VDD = 1.8 V		11.9		
P_{OFFSET}	Supply power dissipation: VOFFSET(5) (6)	VOFFSET = 10.5 V			17.9	mW
		VOFFSET = 10 V		9		

Copyright © 2023 Texas Instruments Incorporated

6.6 Electrical Characteristics (continued)

Over operating free-air temperature range (unless otherwise noted)(1)

PARAMETER		TEST CONDITIONS(2)	MIN	TYP	MAX	UNIT
P_{BIAS}	Supply power dissipation: VBIAS(5) (6)	VBIAS = 18.5 V			7.4	mW
		VBIAS = 18 V		3.6		
P_{RESET}	Supply power dissipation: VRESET(6)	VRESET = –14.5 V			29	mW
		VRESET = –14 V		16.8		
P_{TOTAL}	Supply power dissipation: Total			90.8	140.3	mW
LPSDR INPUT(8)						
$V_{IH(DC)}$	DC input high voltage(9)		0.7 × VDD		VDD + 0.3	V
$V_{IL(DC)}$	DC input low voltage(9)		–0.3		0.3 × VDD	V
$V_{IH(AC)}$	AC input high voltage(9)		0.8 × VDD		VDD + 0.3	V
$V_{IL(AC)}$	AC input low voltage(9)		–0.3		0.2 × VDD	V
ΔV_T	Hysteresis ($V_{T+} – V_{T–}$)	図 6-11	0.1 × VDD		0.4 × VDD	V
I_{IL}	Low–level input current	VDD = 1.95 V; V_I = 0 V	–100			nA
I_{IH}	High–level input current	VDD = 1.95 V; V_I = 1.95 V			100	nA
LPSDR OUTPUT(10)						
V_{OH}	DC output high voltage	I_{OH} = –2 mA	0.8 × VDD			V
V_{OL}	DC output low voltage	I_{OL} = 2 mA			0.2 × VDD	V
CAPACITANCE						
C_{IN}	Input capacitance LPSDR	f = 1 MHz			10	pF
	Input capacitance SubLVDS	f = 1 MHz			20	
C_{OUT}	Output capacitance	f = 1 MHz			10	pF
C_{RESET}	Reset group capacitance	f = 1 MHz; (480 × 108) micromirrors	95		113	pF

(1) Device electrical characteristics are over セクション 6.4 unless otherwise noted.
(2) All voltage values are with respect to the ground pins (VSS).
(3) To prevent excess current, the supply voltage delta |VDDI – VDD| must be less than specified limit.
(4) Supply power dissipation based on non–compressed commands and data.
(5) To prevent excess current, the supply voltage delta |VBIAS – VOFFSET| must be less than specified limit.
(6) Supply power dissipation based on 3 global resets in 200 µs.
(7) The following power supplies are all required to operate the DMD: VSS, VDD, VDDI, VOFFSET, VBIAS, VRESET.
(8) LPSDR specifications are for pins LS_CLK and LS_WDATA.
(9) Low-speed interface is LPSDR and adheres to the Electrical Characteristics and AC/DC Operating Conditions table in JEDEC Standard No. 209B, *Low-Power Double Data Rate* (LPDDR) JESD209B.
(10) LPSDR specification is for pin LS_RDATA.

Copyright © 2023 Texas Instruments Incorporated

6.7 Timing Requirements

Device electrical characteristics are over *Recommended Operating Conditions* unless otherwise noted.

			MIN	NOM	MAX	UNIT
LPSDR						
t_R	Rise slew rate(1)	(30% to 80%) × VDD, 図 6-3	1		3	V/ns
t_F	Fall slew rate(1)	(70% to 20%) × VDD, 図 6-3	1		3	V/ns
t_R	Rise slew rate(2)	(20% to 80%) × VDD, 図 6-3	0.25			V/ns
t_F	Fall slew rate(2)	(80% to 20%) × VDD, 図 6-3	0.25			V/ns
t_C	Cycle time LS_CLK,	図 6-2	7.7	8.3		ns
$t_{W(H)}$	Pulse duration LS_CLK high	50% to 50% reference points, 図 6-2	3.1			ns
$t_{W(L)}$	Pulse duration LS_CLK low	50% to 50% reference points, 図 6-2	3.1			ns
t_{SU}	Setup time	LS_WDATA valid before LS_CLK ↑, 図 6-2	1.5			ns
t_H	Hold time	LS_WDATA valid after LS_CLK ↑, 図 6-2	1.5			ns
t_{WINDOW}	Window time(1) (3)	Setup time + Hold time, 図 6-2	3.0			ns
$t_{DERATING}$	Window time derating(1) (3)	For each 0.25 V/ns reduction in slew rate below 1 V/ns, 図 6-5		0.35		ns
SubLVDS						
t_R	Rise slew rate	20% to 80% reference points, 図 6-4	0.7	1		V/ns
t_F	Fall slew rate	80% to 20% reference points, 図 6-4	0.7	1		V/ns
t_C	Cycle time LS_CLK,	図 6-6	1.61	1.67		ns
$t_{W(H)}$	Pulse duration DCLK high	50% to 50% reference points, 図 6-6	0.71			ns
$t_{W(L)}$	Pulse duration DCLK low	50% to 50% reference points, 図 6-6	0.71			ns
t_{SU}	Setup time	D(0:3) valid before DCLK ↑ or DCLK ↓, 図 6-6				
t_H	Hold time	D(0:3) valid after DCLK ↑ or DCLK ↓, 図 6-6				
t_{WINDOW}	Window time	Setup time + Hold time, 図 6-6, 図 6-7	3.0			ns
$t_{LVDS-ENABLE+REFGEN}$	Power-up receiver(4)				2000	ns

(1) Specification is for LS_CLK and LS_WDATA pins. Refer to LPSDR input rise slew rate and fall slew rate in 図 6-3.
(2) Specification is for DMD_DEN_ARSTZ pin. Refer to LPSDR input rise and fall slew rate in 図 6-3.
(3) Window time derating example: 0.5-V/ns slew rate increases the window time by 0.7 ns, from 3 to 3.7 ns.
(4) Specification is for SubLVDS receiver time only and does not take into account commanding and latency after commanding.

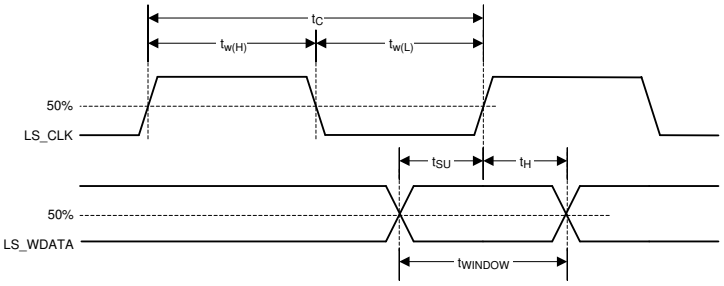

A. Low-speed interface is LPSDR and adheres to the *セクション 6.6* and AC/DC Operating Conditions table in JEDEC Standard No. 209B, *Low Power Double Data Rate (LPDDR)* JESD209B.

図 6-2. LPSDR Switching Parameters

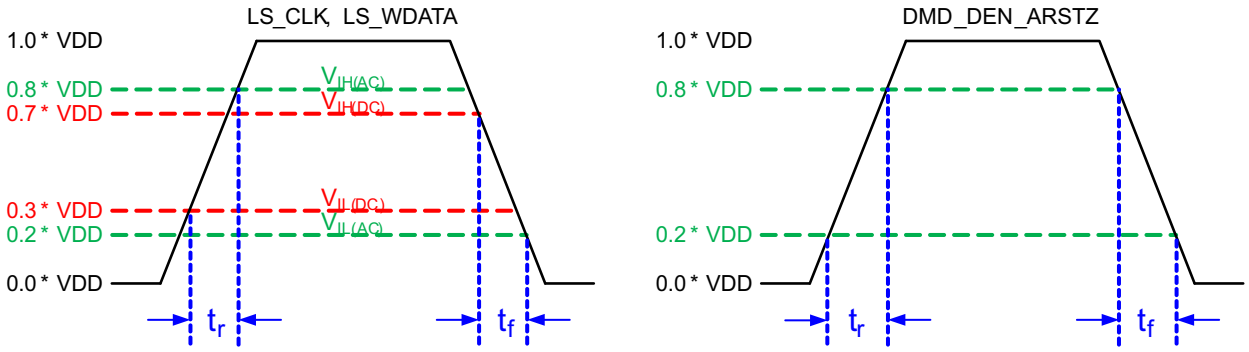

図 6-3. LPSDR Input Rise and Fall Slew Rate

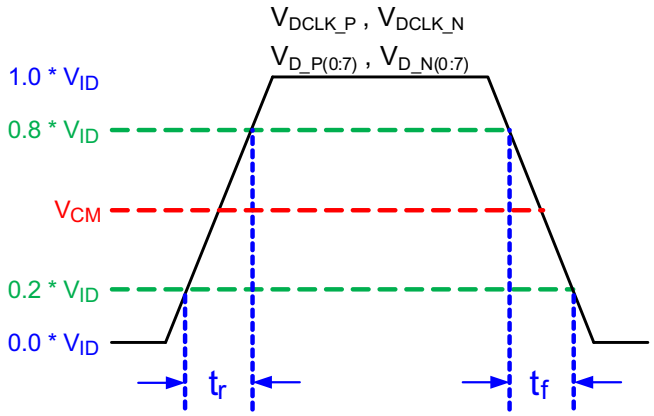

図 6-4. SubLVDS Input Rise and Fall Slew Rate

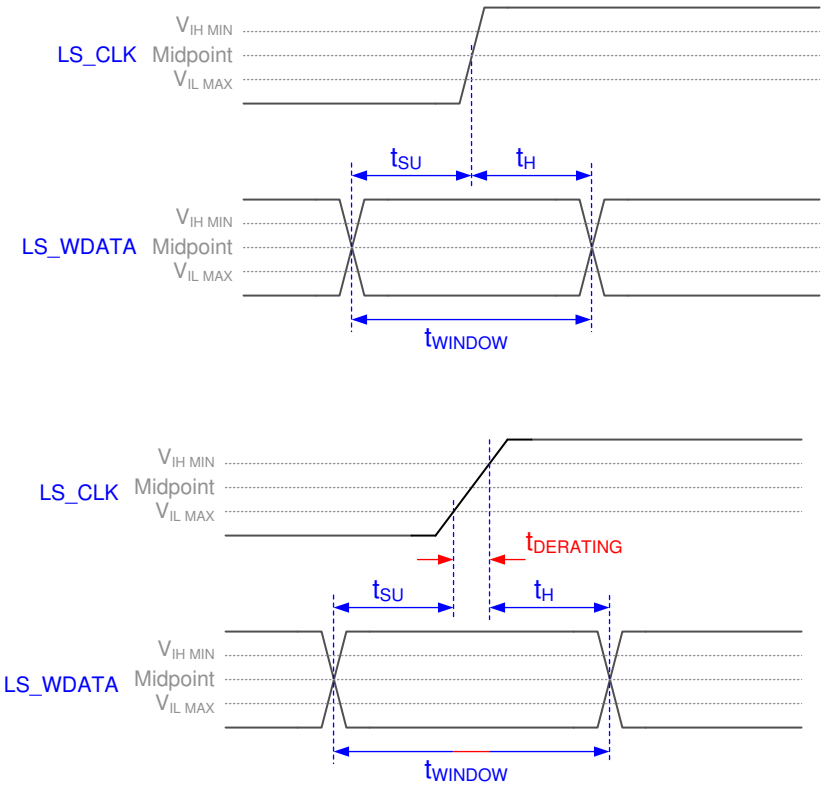

図 6-5. Window Time Derating Concept

Copyright © 2023 Texas Instruments Incorporated

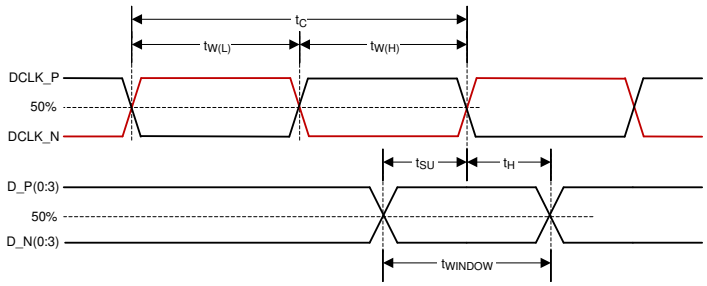

図 6-6. SubLVDS Switching Parameters

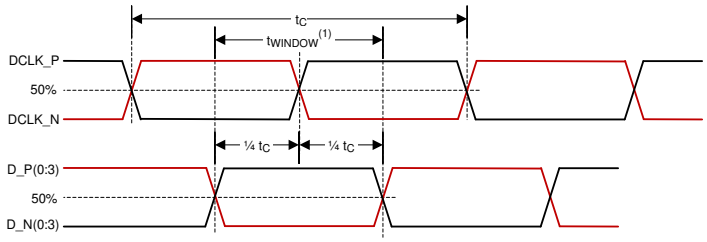

(1) High-speed training scan window

Note: Refer to *セクション 7.3.3* for details.

図 6-7. High-Speed Training Scan Window

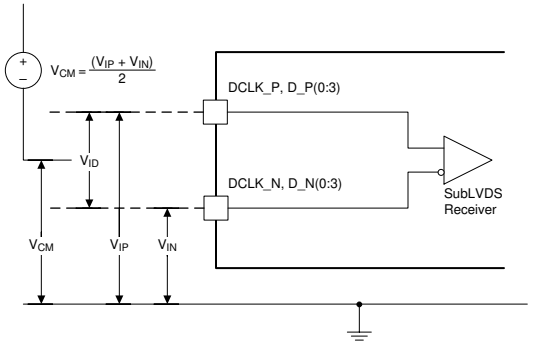

図 6-8. SubLVDS Voltage Parameters

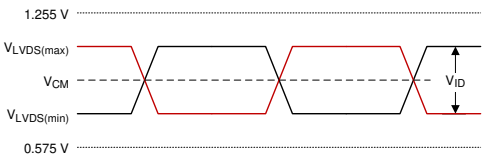

A. $V_{SubLVDS(max)} = V_{CM(max)} + | ½ \times V_{ID(max)} |$
B. $V_{SubLVDS(min)} = V_{CM(min)} - | ½ \times V_{ID(max)} |$

図 6-9. SubLVDS Waveform Parameters

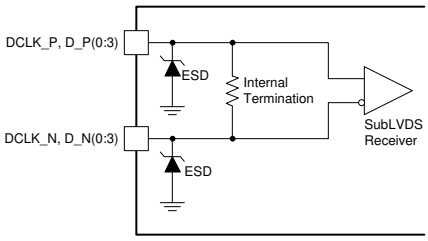

図 6-10. SubLVDS Equivalent Input Circuit

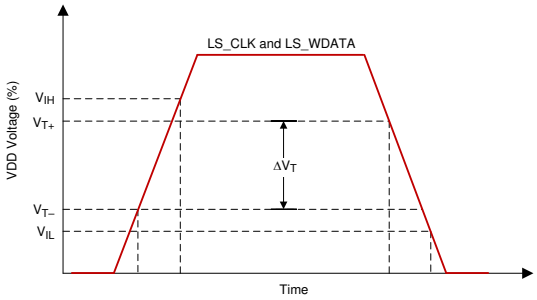

図 6-11. LPSDR Input Hysteresis

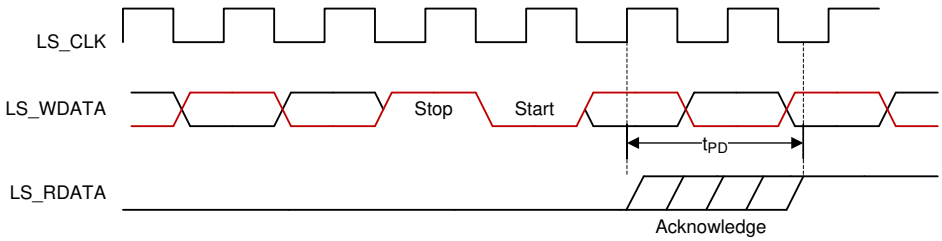

図 6-12. LPSDR Read Out

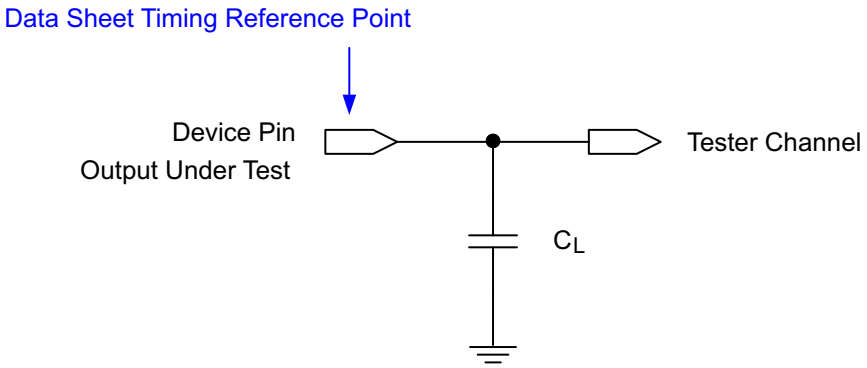

A. See セクション 7.3.4 for more information.

図 6-13. Test Load Circuit for Output Propagation Measurement

Copyright © 2023 Texas Instruments Incorporated

6.8 Switching Characteristics

Over operating free-air temperature range (unless otherwise noted)(1)

PARAMETER		TEST CONDITIONS	MIN	TYP	MAX	UNIT
t_{PD}	Output propagation, Clock to Q, rising edge of LS_CLK input to LS_RDATA output. 図 6-12	C_L = 45 pF			15	ns
	Slew rate, LS_RDATA		0.5			V/ns
	Output duty cycle distortion, LS_RDATA		40%		60%	

(1) Device electrical characteristics are over セクション 6.4 unless otherwise noted.

Copyright © 2023 Texas Instruments Incorporated

6.9 System Mounting Interface Loads

PARAMETER		MIN	NOM	MAX	UNIT
Maximum system mounting interface load to be applied to the:	Connector area (see 図 6-14)			45	N
	DMD mounting area uniformly distributed over 4 areas (see 図 6-14)			100	N

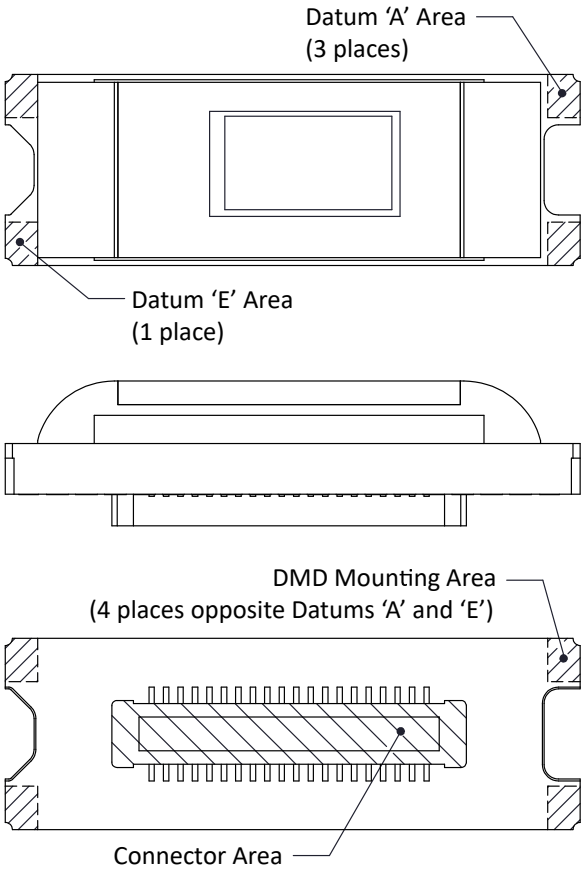

図 6-14. System Interface Loads

Copyright © 2023 Texas Instruments Incorporated

6.10 Physical Characteristics of the Micromirror Array

PARAMETER		VALUE	UNIT
Number of active columns	See 図 6-15	854	micromirrors
Number of active rows	See 図 6-15	480	micromirrors
Micromirror (pixel) pitch	See 図 6-16	5.4	µm
Micromirror active array width	Micromirror pitch × number of active columns; see 図 6-15	4.6116	mm
Micromirror active array height	Micromirror pitch × number of active rows; see 図 6-15	2.592	mm
Micromirror active border	Pond of micromirror (POM)(1)	20	micromirrors/side

(1) The structure and qualities of the border around the active array includes a band of partially functional micromirrors called the POM. These micromirrors are structurally and/or electrically prevented from tilting toward the bright or ON state, but still require an electrical bias to tilt toward OFF.

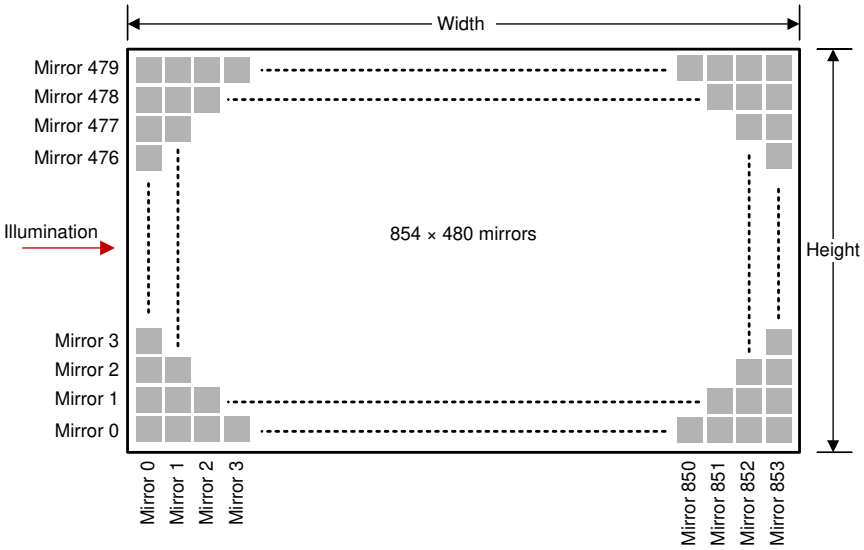

図 6-15. Micromirror Array Physical Characteristics

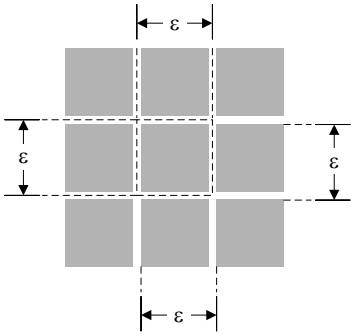

図 6-16. Mirror (Pixel) Pitch

Copyright © 2023 Texas Instruments Incorporated

6.11 Micromirror Array Optical Characteristics

PARAMETER		TEST CONDITIONS	MIN	NOM	MAX	UNIT
Micromirror tilt angle		DMD landed state(1)		17		degrees
Micromirror tilt angle tolerance(2) (3) (4) (5)			–1.4		1.4	degrees
Micromirror tilt direction(6) (7)		Landed ON state		180		degrees
		Landed OFF state		270		
Micromirror crossover time(8)		Typical Performance		1	3	µs
Micromirror switching time(9)		Typical Performance	10			
Image performance(10)	Bright pixel(s) in active area (11)	Gray 10 Screen (12)			0	micromirrors
	Bright pixel(s) in the POM (13)	Gray 10 Screen (12)			1	
	Dark pixel(s) in the active area (14)	White Screen			4	
	Adjacent pixel(s) (15)	Any Screen			0	
	Unstable pixel(s) in active area (16)	Any Screen			0	

(1) Measured relative to the plane formed by the overall micromirror array.
(2) Additional variation exists between the micromirror array and the package datums.
(3) Represents the landed tilt angle variation relative to the nominal landed tilt angle.
(4) Represents the variation that can occur between any two individual micromirrors, located on the same device or located on different devices.
(5) For some applications, it is critical to account for the micromirror tilt angle variation in the overall system optical design. With some system optical designs, the micromirror tilt angle variation within a device may result in perceivable non-uniformities in the light field reflected from the micromirror array. With some system optical designs, the micromirror tilt angle variation between devices may result in colorimetry variations, system efficiency variations or system contrast variations.
(6) When the micromirror array is landed (not parked), the tilt direction of each individual micromirror is dictated by the binary contents of the CMOS memory cell associated with each individual micromirror. A binary value of 1 results in a micromirror landing in the ON state direction. A binary value of 0 results in a micromirror landing in the OFF state direction. See 図 6-17
(7) Micromirror tilt direction is measured as in a typical polar coordinate system: Measuring counter-clockwise from a 0° reference which is aligned with the +X Cartesian axis.
(8) The time required for a micromirror to nominally transition from one landed state to the opposite landed state.
(9) The minimum time between successive transitions of a micromirror.
(10) Conditions of Acceptance: All DMD image quality returns will be evaluated using the following projected image test conditions:
Test set degamma shall be linear
Test set brightness and contrast shall be set to nominal
The diagonal size of the projected image shall be a minimum of 20 inches
The projections screen shall be 1X gain
The projected image shall be inspected from a 38 inch minimum viewing distance
The image shall be in focus during all image quality tests
(11) Bright pixel definition: A single pixel or mirror that is stuck in the ON position and is visibly brighter than the surrounding pixels
(12) Gray 10 screen definition: All areas of the screen are colored with the following settings:
Red = 10/255
Green = 10/255
Blue = 10/255
(13) POM definition: Rectangular border of off-state mirrors surrounding the active area
(14) Dark pixel definition: A single pixel or mirror that is stuck in the OFF position and is visibly darker than the surrounding pixels
(15) Adjacent pixel definition: Two or more stuck pixels sharing a common border or common point, also referred to as a cluster
(16) Unstable pixel definition: A single pixel or mirror that does not operate in sequence with parameters loaded into memory. The unstable pixel appears to be flickering asynchronously with the image

Copyright © 2023 Texas Instruments Incorporated

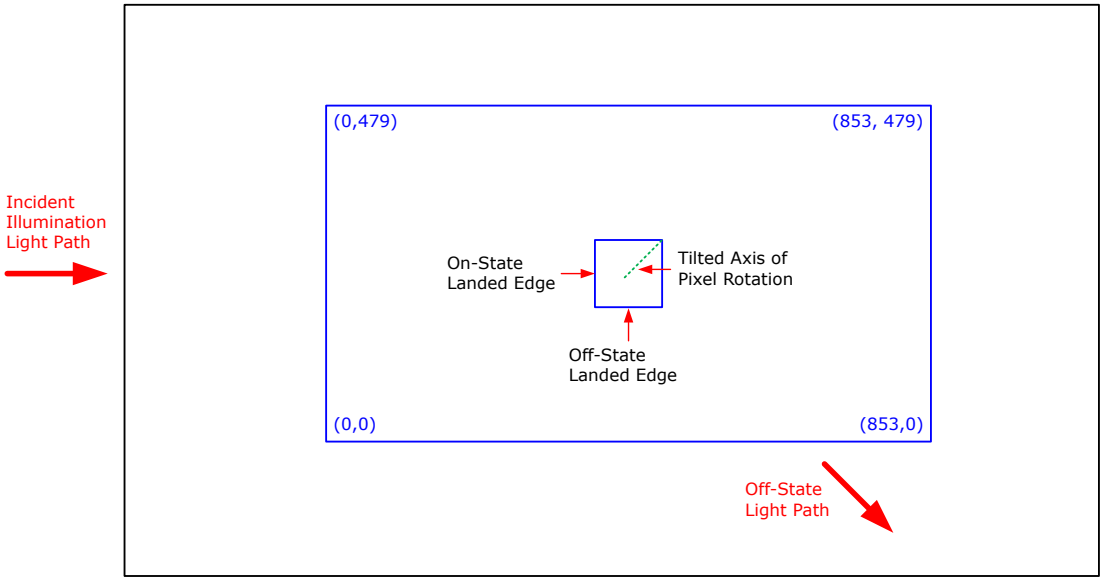

図 6-17. Landed Pixel Orientation and Tilt

6.12 Window Characteristics

PARAMETER(1)		MIN	NOM	MAX	UNIT
Window material designation			Corning Eagle XG		
Window refractive index	at wavelength 546.1 nm		1.5119		
Window aperture(2)				See (2)	
Illumination overfill(3)				See (3)	
Window transmittance, single-pass through both surfaces and glass	Minimum within the wavelength range 420 to 680 nm. Applies to all angles 0° to 30° AOI.	97%			
Window Transmittance, single-pass through both surfaces and glass	Average over the wavelength range 420 to 680 nm. Applies to all angles 30° to 45° AOI.	97%			

(1) See *セクション 7.5* for more information.
(2) See the package mechanical characteristics for details regarding the size and location of the window aperture.
(3) The active area of the DLP2010 device is surrounded by an aperture on the inside of the DMD window surface that masks structures of the DMD device assembly from normal view. The aperture is sized to anticipate several optical conditions. Overfill light illuminating the area outside the active array can scatter and create adverse effects to the performance of an end application using the DMD. The illumination optical system should be designed to limit light flux incident outside the active array to less than 10% of the average flux level in the active area. Depending on the particular system's optical architecture and assembly tolerances, the amount of overfill light on the outside of the active array may cause system performance degradation.

6.13 Chipset Component Usage Specification

The DLP2010 is a component of one or more TI DLP® chipsets. Reliable function and operation of the DLP2010 requires that it be used in conjunction with the other components of the applicable DLP chipset, including those components that contain or implement TI DMD control technology. TI DMD control technology is the TI technology and devices for operating or controlling a DLP DMD.

注

TI assumes no responsibility for image quality artifacts or DMD failures caused by optical system operating conditions exceeding limits described previously.

6.14 Software Requirements

注意

The DLP2010 DMD has mandatory software requirements. Refer to *Software Requirements for TI DLP®Pico® TRP Digital Micromirror Devices* application report for additional information. Failure to use the specified software will result in failure at power up.

Copyright © 2023 Texas Instruments Incorporated

7 Detailed Description

7.1 Overview

The DLP2010 is a 0.2 inch diagonal spatial light modulator of aluminum micromirrors. Pixel array size is 854 columns by 480 rows in a square grid pixel arrangement. The electrical interface is sub low voltage differential signaling (SubLVDS) data.

This DMD is part of the chipset that is composed of the DMD, DLPC3430 or DLPC3435 display controller and the DLPA200x/DLPA3000 PMIC and LED driver. To ensure reliable operation, the DMD must always be used with the DLPC3430 or DLPC3435 display controller and the DLPA200x/DLPA3000 PMIC and LED driver.

7.2 Functional Block Diagram

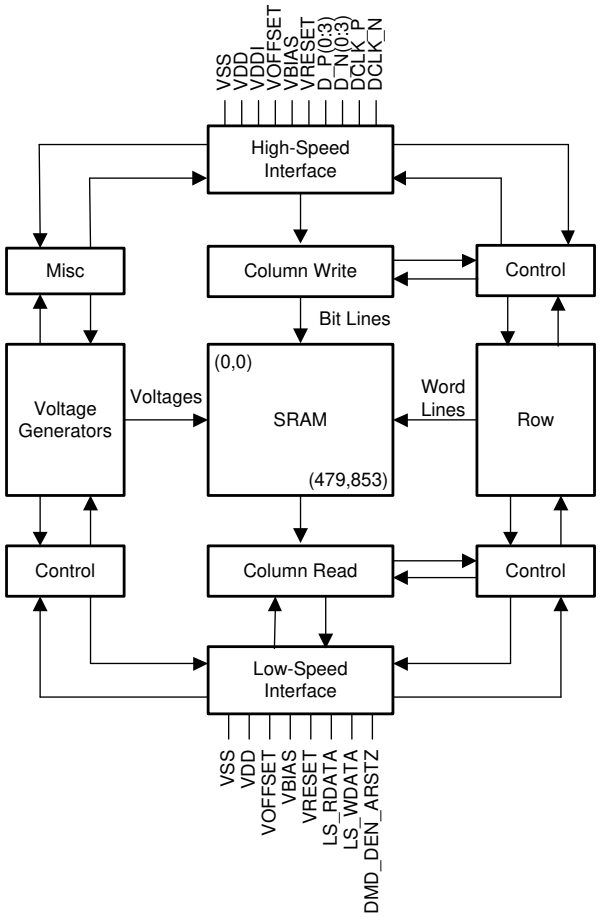

Details omitted for clarity.

7.3 Feature Description

7.3.1 Power Interface

The power management component DLPA200x/DLPA3000, contains three 3 regulated DC supplies for the DMD reset circuitry: VBIAS, VRESET and VOFFSET, as well as the two regulated DC supplies for the DLPC3430 or DLPC3435 controller.

7.3.2 Low-Speed Interface

The low speed interface handles instructions that configure the DMD and control reset operation. LS_CLK is the low–speed clock, and LS_WDATA is the low speed data input.

7.3.3 High-Speed Interface

The purpose of the high-speed interface is to transfer pixel data rapidly and efficiently, making use of high speed DDR transfer and compression techniques to save power and time. The high-speed interface uses differential SubLVDS receivers for inputs, with a dedicated clock.

7.3.4 Timing

The data sheet provides timing test results at the device pin. For output timing analysis, the tester pin electronics and its transmission line effects must be considered. Test Load Circuit for Output Propagation Measurement shows an equivalent test load circuit for the output under test. Timing reference loads are not intended as a precise representation of any particular system environment or depiction of the actual load presented by a production test. TI recommends that system designers use IBIS or other simulation tools to correlate the timing reference load to a system environment. The load capacitance value stated is intended for characterization and measurement of AC timing signals only. This load capacitance value does not indicate the maximum load the device is capable of driving.

7.4 Device Functional Modes

DMD functional modes are controlled by the DLPC3430 or DLPC3435 controller. See the DLPC3430 or DLPC3435 controller data sheet or contact a TI applications engineer.

7.5 Optical Interface and System Image Quality Considerations

注

TI assumes no responsibility for image quality artifacts or DMD failures caused by optical system operating conditions exceeding limits described previously.

7.5.1 Optical Interface and System Image Quality

TI assumes no responsibility for end-equipment optical performance. Achieving the desired end-equipment optical performance involves making trade-offs between numerous component and system design parameters. Optimizing system optical performance and image quality strongly relate to optical system design parameter trades. Although it is not possible to anticipate every conceivable application, projector image quality and optical performance is contingent on compliance to the optical system operating conditions described in the following sections.

7.5.1.1 Numerical Aperture and Stray Light Control

The angle defined by the numerical aperture of the illumination and projection optics at the DMD optical area is typically the same. Ensure this angle does not exceed the nominal device micromirror tilt angle unless appropriate apertures are added in the illumination or projection pupils to block out flat-state and stray light from the projection lens. The micromirror tilt angle defines DMD capability to separate the "ON" optical path from any other light path, including undesirable flat–state specular reflections from the DMD window, DMD border structures, or other system surfaces near the DMD such as prism or lens surfaces. If the numerical aperture exceeds the micromirror tilt angle, or if the projection numerical aperture angle is more than two degrees larger than the illumination numerical aperture angle (and vice versa), contrast degradation and objectionable artifacts in the display border and/or active area may occur.

Copyright © 2023 Texas Instruments Incorporated

7.5.1.2 Pupil Match

The optical and image quality specifications assume that the exit pupil of the illumination optics is nominally centered within 2° of the entrance pupil of the projection optics. Misalignment of pupils can create objectionable artifacts in the display border and/or active area. These artifacts may require additional system apertures to control, especially if the numerical aperture of the system exceeds the pixel tilt angle.

7.5.1.3 Illumination Overfill

The active area of the device is surrounded by an aperture on the inside DMD window surface that masks structures of the DMD chip assembly from normal view, and is sized to anticipate several optical operating conditions. Overfill light illuminating the window aperture can create artifacts from the edge of the window aperture opening and other surface anomalies that may be visible on the screen. Be sure to design an illumination optical system that limits light flux incident anywhere on the window aperture from exceeding approximately 10% of the average flux level in the active area. Depending on the particular optical architecture, overfill light may require further reduction below the suggested 10% level in order to be acceptable.

7.6 Micromirror Array Temperature Calculation

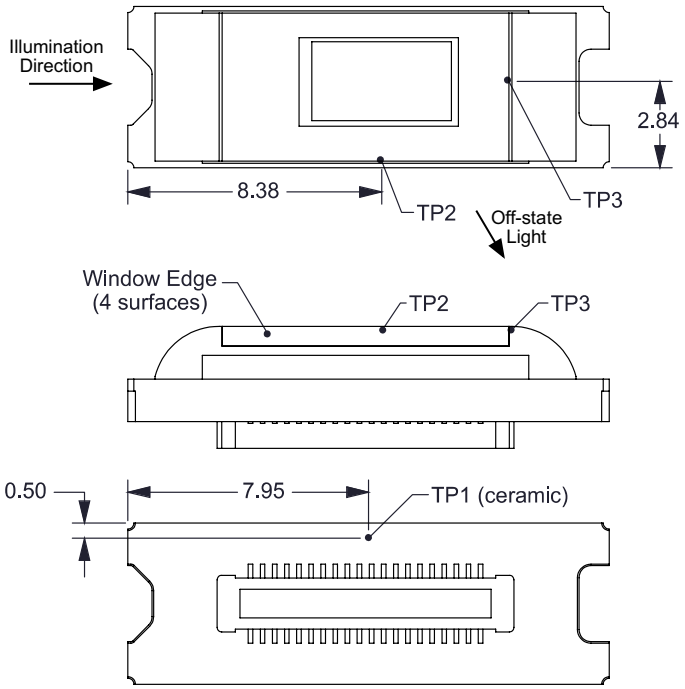

図 7-1. DMD Thermal Test Points

Micromirror array temperature cannot be measured directly, therefore it must be computed analytically from measurement points on the outside of the package, the package thermal resistance, the electrical power, and the illumination heat load. The relationship between array temperature and the reference ceramic temperature (thermal test TP1 in 図 7-1) is provided by the following equations:

$$T_{ARRAY} = T_{CERAMIC} + (Q_{ARRAY} \times R_{ARRAY\text{-}TO\text{-}CERAMIC})$$

$$Q_{ARRAY} = Q_{ELECTRICAL} + Q_{ILLUMINATION}$$

where

- T_{ARRAY} = Computed array temperature (°C)
- $T_{CERAMIC}$ = Measured ceramic temperature (°C) (TP1 location)

Copyright © 2023 Texas Instruments Incorporated

- $R_{ARRAY-TO-CERAMIC}$ = Thermal resistance of package specified in セクション 6.5 from array to ceramic TP1 (°C/Watt)
- Q_{ARRAY} = Total DMD power on the array (W) (electrical + absorbed)
- $Q_{ELECTRICAL}$ = Nominal electrical power (W)
- $Q_{INCIDENT}$ = Incident illumination optical power (W)
- $Q_{ILLUMINATION}$ = (DMD average thermal absorptivity × $Q_{INCIDENT}$) (W)
- DMD average thermal absorptivity = 0.4

The electrical power dissipation of the DMD is variable and depends on the voltages, data rates and operating frequencies. A nominal electrical power dissipation to use when calculating array temperature is 0.07 Watts. The absorbed power from the illumination source is variable and depends on the operating state of the micromirrors and the intensity of the light source. The equations shown above are valid for a single chip or multichip DMD system. It assumes an illumination distribution of 83.7% on the active array, and 16.3% on the array border.

The sample calculation for a typical projection application is as follows:

$Q_{INCIDENT}$ = 2.0 W (measured)

$T_{CERAMIC}$ = 55.0°C (measured)

$Q_{ELECTRICAL}$ = 0.07 W

Q_{ARRAY} = 0.07 W + (0.40 × 2.0 W) = 0.87 W

T_{ARRAY} = 55.0°C + (0.87 W × 7.9°C/W) = 61.9°C

7.7 Micromirror Power Density Calculation

The calculation of the optical power density of the illumination on the DMD in the different wavelength bands uses the total measured optical power on the DMD, percent illumination overfill, area of the active array, and ratio of the spectrum in the wavelength band of interest to the total spectral optical power.

- $ILL_{UV} = [OP_{UV-RATIO} \times Q_{INCIDENT}] \times 1000 \div A_{ILL}$ (mW/cm^2)
- $ILL_{VIS} = [OP_{VIS-RATIO} \times Q_{INCIDENT}] \div A_{ILL}$ (W/cm^2)
- $ILL_{IR} = [OP_{IR-RATIO} \times Q_{INCIDENT}] \times 1000 \div A_{ILL}$ (mW/cm^2)
- $ILL_{BLU} = [OP_{BLU-RATIO} \times Q_{INCIDENT}] \div A_{ILL}$ (W/cm^2)
- $ILL_{BLU1} = [OP_{BLU1-RATIO} \times Q_{INCIDENT}] \div A_{ILL}$ (W/cm^2)
- $A_{ILL} = A_{ARRAY} \div (1 - OV_{ILL})$ (cm^2)

where:

- ILL_{UV} = UV illumination power density on the DMD (mW/cm^2)
- ILL_{VIS} = VIS illumination power density on the DMD (W/cm^2)
- ILL_{IR} = IR illumination power density on the DMD (mW/cm^2)
- ILL_{BLU} = BLU illumination power density on the DMD (W/cm^2)
- ILL_{BLU1} = BLU1 illumination power density on the DMD (W/cm^2)
- A_{ILL} = illumination area on the DMD (cm^2)
- $Q_{INCIDENT}$ = total incident optical power on DMD (W) (measured)

Copyright © 2023 Texas Instruments Incorporated

- A_{ARRAY} = area of the array (cm ^{2}) (data sheet)
- OV_{ILL} = percent of total illumination on the DMD outside the array (%) (optical model)
- $OP_{UV\text{-}RATIO}$ = ratio of the optical power for wavelengths <410 nm to the total optical power in the illumination spectrum (spectral measurement)
- $OP_{VIS\text{-}RATIO}$ = ratio of the optical power for wavelengths ≥410 and ≤800 nm to the total optical power in the illumination spectrum (spectral measurement)
- $OP_{IR\text{-}RATIO}$ = ratio of the optical power for wavelengths >800 nm to the total optical power in the illumination spectrum (spectral measurement)
- $OP_{BLU\text{-}RATIO}$ = ratio of the optical power for wavelengths ≥410 and ≤475 nm to the total optical power in the illumination spectrum (spectral measurement)
- $OP_{BLU1\text{-}RATIO}$ = ratio of the optical power for wavelengths ≥410 and ≤445 nm to the total optical power in the illumination spectrum (spectral measurement)

The illumination area varies and depends on the illumination overfill. The total illumination area on the DMD is the array area and overfill area around the array. The optical model is used to determine the percent of the total illumination on the DMD that is outside the array (OV_{ILL}) and the percent of the total illumination that is on the active array. From these values the illumination area (A_{ILL}) is calculated. The illumination is assumed to be uniform across the entire array.

From the measured illumination spectrum, the ratio of the optical power in the wavelength bands of interest to the total optical power is calculated.

Sample calculation:

$Q_{INCIDENT}$ = 2.00 W (measured)

A_{ARRAY} = (0.46116× 0.2592) = 0.1195 cm^2 (data sheet)

OV_{ILL} = 16.3% (optical model)

$OP_{UV\text{-}RATIO}$ = 0.00021 (spectral measurement)

$OP_{VIS\text{-}RATIO}$ = 0.99977 (spectral measurement)

$OP_{IR\text{-}RATIO}$ = 0.00002 (spectral measurement)

$OP_{BLU\text{-}RATIO}$ = 0.28100 (spectral measurement)

$OP_{BLU1\text{-}RATIO}$ = 0.03200 (spectral measurement)

A_{ILL} = 0.1195 ÷ (1 - 0.163) = 0.1428 cm^2

ILL_{UV} = [0.00021 × 2.00W] × 1000 ÷ 0.1428 cm^2 = 2.941 mW/cm^2

ILL_{VIS} = [0.99977 × 2.00W] ÷ 0.1428 cm^2 = 14.00 W/cm^2

ILL_{IR} = [0.00002 × 2.00W] × 1000 ÷ 0.1428 cm^2 = 0.280 mW/cm^2

ILL_{BLU} = [0.28100 × 2.00W] ÷ 0.1428 cm^2 = 3.94 W/cm^2

ILL_{BLU1} = [0.03200 × 2.00W] ÷ 0.1428 cm^2 = 0.448 W/cm^2

Copyright © 2023 Texas Instruments Incorporated

7.8 Micromirror Landed-On/Landed-Off Duty Cycle

7.8.1 Definition of Micromirror Landed-On and Landed-Off Duty Cycle

The micromirror landed-on/landed-off duty cycle (landed duty cycle) denotes the amount of time (as a percentage) that an individual micromirror is landed in the ON state versus the amount of time the same micromirror is landed in the OFF state.

As an example, a landed duty cycle of 75/25 indicates that the referenced pixel is in the ON state 75% of the time (and in the OFF state 25% of the time), whereas 25/75 indicates that the pixel is in the OFF state 75% of the time. Likewise, 50/50 indicates that the pixel is ON 50% of the time and OFF 50% of the time.

When assessing landed duty cycle, the time spent switching from the current state to the opposite state is considered negligible and is thus ignored.

Because a micromirror can only be landed in one state or the other (ON or OFF), the two numbers (percentages) nominally add to 100.In practice, image processing algorithms in the DLP chipset can result a total of less that 100.

7.8.2 Landed Duty Cycle and Useful Life of the DMD

Knowing the long-term average landed duty cycle (of the end product or application) is important because subjecting all (or a portion) of the DMD's micromirror array (also called the active array) to an asymmetric landed duty cycle for a prolonged period of time can reduce the DMD's usable life.

It is the symmetry or asymmetry of the landed duty cycle that is relevant. The symmetry of the landed duty cycle is determined by how close the two numbers (percentages) are to being equal. For example, a landed duty cycle of 50/50 is perfectly symmetrical whereas a landed duty cycle of 100/0 or 0/100 is perfectly asymmetrical.

Copyright © 2023 Texas Instruments Incorporated

7.8.3 Landed Duty Cycle and Operational DMD Temperature

Operational DMD temperature and landed duty cycle interact to affect the usable life of the DMD. This interaction can be used to reduce the impact that an asymmetrical landed duty cycle has on the useable life of the DMD. 図 6-1 describes this relationship. The importance of this curve is that:

- All points along this curve represent the same usable life.
- All points above this curve represent lower usable life (and the further away from the curve, the lower the usable life).
- All points below this curve represent higher usable life (and the further away from the curve, the higher the usable life).

In practice, this curve specifies the maximum operating DMD temperature that the DMD should be operated at for a give long-term average landed duty cycle.

7.8.4 Estimating the Long-Term Average Landed Duty Cycle of a Product or Application

During a given period of time, the landed duty cycle of a given pixel depends on the image content being displayed by that pixel.

In the simplest case for example, when the system displays pure-white on a given pixel for a given time period, that pixel operates very close to a 100/0 landed duty cycle during that time period. Likewise, when the system displays pure-black, the pixel operates very close to a 0/100 landed duty cycle.

Between the two extremes (ignoring for the moment color and any image processing that may be applied to an incoming image), the landed duty cycle tracks one-to-one with the gray scale value, as shown in 表 7-1.

表 7-1. Grayscale Value and Landed Duty Cycle

Grayscale Value	Nominal Landed Duty Cycle
0%	0/100
10%	10/90
20%	20/80
30%	30/70
40%	40/60
50%	50/50
60%	60/40
70%	70/30
80%	80/20
90%	90/10
100%	100/0

To account for color rendition (and continuing to ignore image processing for this example) requires knowing both the color intensity (from 0% to 100%) for each constituent primary color (red, green, and/or blue) for the given pixel as well as the color cycle time for each primary color, where *color cycle time* describes the total percentage of the frame time that a given primary must be displayed in order to achieve the desired white point.

During a given period of time, the nominal landed duty cycle of a given pixel can be calculated as follows:

Landed Duty Cycle = (Red_Cycle_% × Red_Scale_Value) + (Green_Cycle_% × Green_Scale_Value) + (Blue_Cycle_% × Blue_Scale_Value)

where

- Red_Cycle_% represents the percentage of the frame time that red displays to achieve the desired white point

Copyright © 2023 Texas Instruments Incorporated

- Green_Cycle_% represents the percentage of the frame time that green displays to achieve the desired white point
- Blue_Cycle_% represents the percentage of the frame time that blue displays to achieve the desired white point

For example, assume that the ratio of red, green and blue color cycle times are as listed in 表 7-2 (in order to achieve the desired white point) then the resulting nominal landed duty cycle for various combinations of red, green, blue color intensities are as shown in 表 7-3.

表 7-2. Example Landed Duty Cycle for Full-Color Pixels

Red Cycle Percentage	Green Cycle Percentage	Blue Cycle Percentage
50%	20%	30%

表 7-3. Color Intensity Combinations

Red Scale Value	Green Scale Value	Blue Scale Value	Nominal Landed Duty Cycle
0%	0%	0%	0/100
100%	0%	0%	50/50
0%	100%	0%	20/80
0%	0%	100%	30/70
12%	0%	0%	6/94
0%	35%	0%	7/93
0%	0%	60%	18/82
100%	100%	0%	70/30
0%	100%	100%	50/50
100%	0%	100%	80/20
12%	35%	0%	13/87
0%	35%	60%	25/75
12%	0%	60%	24/76
100%	100%	100%	100/0

The last factor to consider when estimating the landed duty cycle is any applied image processing. In the DLPC34xx controller family, the two functions which influence the actual landed duty cycle are Gamma and IntelliBright™, and bitplane sequencing rules.

Gamma is a power function of the form $Output_Level = A \times Input_Level^{Gamma}$, where A is a scaling factor that is typically set to 1.

In the DLPC34xx controller family, gamma is applied to the incoming image data on a pixel-by-pixel basis. A typical gamma factor is 2.2, which transforms the incoming data as shown in 図 7-2.

Copyright © 2023 Texas Instruments Incorporated

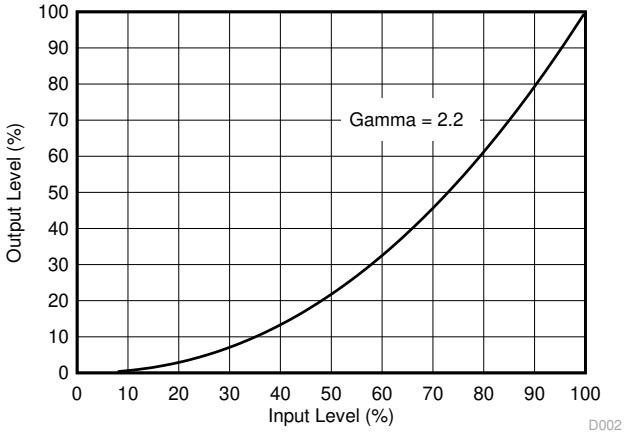

図 7-2. Example of Gamma = 2.2

As shown in 図 7-2, when the gray scale value of a given input pixel is 40% (before gamma is applied), then gray scale value is 13% after gamma is applied. Because gamma has a direct impact on the displayed gray scale level of a pixel, it also has a direct impact on the landed duty cycle of a pixel.

The IntelliBright algorithms content adaptive illumination control (CAIC) and local area brightness boost (LABB) also apply transform functions on the gray scale level of each pixel. But while amount of gamma applied to every pixel (of every frame) is constant (the exponent, gamma, is constant), CAIC and LABB are both adaptive functions that can apply a different amounts of either boost or compression to every pixel of every frame. Be sure to account for any image processing which occurs before the controller.

Copyright © 2023 Texas Instruments Incorporated

8 Application and Implementation

注

以下のアプリケーション情報は、TI の製品仕様に含まれるものではなく、TI ではその正確性または完全性を保証いたしません。個々の目的に対する製品の適合性については、お客様の責任で判断していただくことになります。お客様は自身の設計実装を検証しテストすることで、システムの機能を確認する必要があります。

8.1 Application Information

The DMDs are spatial light modulators which reflect incoming light from an illumination source to one of two directions, with the primary direction being into a projection or collection optic. Each application depends primarily on the optical architecture of the system and the format of the data coming into the DLPC3430 or DLPC3435 controller. The new high-tilt pixel in the side-illuminated DMD increases brightness performance and enables a smaller system electronics footprint for thickness constrained applications. Applications include

- projection embedded in display devices
  - smartphones
  - tablets
  - cameras
  - camcorders
- wearable (near-eye) displays
- battery powered mobile accessory
- interactive display
- low-latency gaming display
- digital signage

DMD power-up and power-down sequencing is strictly controlled by the DLPA200x/DLPA3000. Refer to *セクション 9* for power-up and power-down specifications. DLP2010 DMD reliability is specified when used with DLPC3430 or DLPC3435 controller and DLPA200x/DLPA3000 PMIC/LED driver only.

8.2 Typical Application

This section describes a pico-projector using a DLP chipset that includes a DLP2010 DMD, DLPC3430 or DLPC3435 controller and DLPA200x/DLPA3000 PMIC/LED driver. The DLPC3430 or DLPC3435 controller does the digital image processing, the DLPA200x/DLPA3000 provides the needed analog functions for the projector, and DMD is the display device for producing the projected image.

The DLPC3430 controller in the pico-projector embedded module typically receives images/video from a host processor within the product. DLPC3430 controller then drives the DMD synchronized with the R, G, B LEDs in the optical engine to display the image/video as output of the optical engine.

Copyright © 2023 Texas Instruments Incorporated

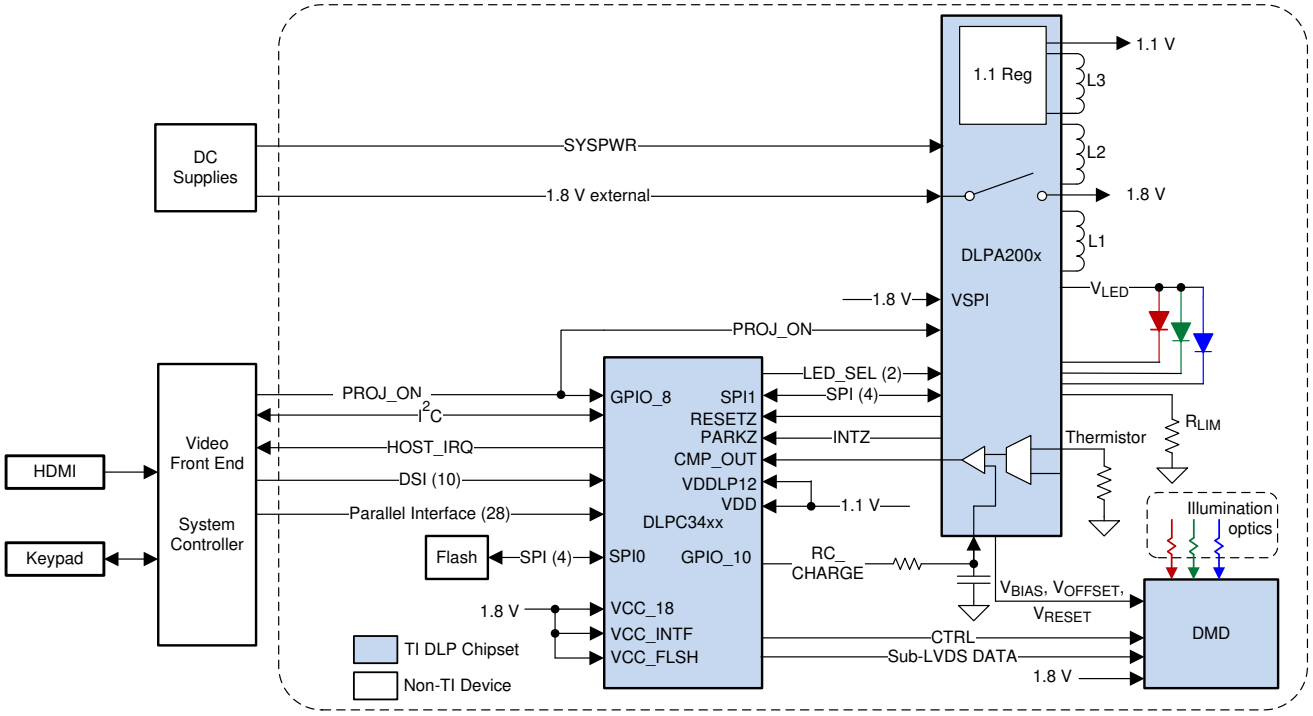

図 8-1. Typical Application

8.2.1 Design Requirements

In addition to the three DLP devices in the chipset, other IC components may be needed. At a minimum, this design requires a flash device to store the software and firmware to control the DLPC3430 or DLPC3435.

Red, green, and blue LEDs typically supply the illumination light that is applied to the DMD. These LEDs are often contained in three separate packages, but sometimes more than one color of LED die may be in the same package to reduce the overall size of the pico-projector.

A parallel interface connects the DLPC3430 or DLPC3435 to the host processing for receiving images. When the parallel interface is used, use an I^2C interface to the host processor for sending commands to the DLPC3430 or DLPC3435.

The battery (SYSPWR) and a regulated 1.8-V supply are the only power supplies needed external to the projector in case of DLPA200x. The DLPA3000 supplies the 1.8V without external regulator.

8.2.2 Detailed Design Procedure

For connecting together the DLPC3430 or DLPC3435, the DLPA200x/DLPA3000, and the DMD, see the reference design schematic. When a circuit board layout is created from this schematic a very small circuit board is possible. An example small board layout is included in the reference design data base. Layout guidelines should be followed to achieve a reliable projector.

The optical engine that has the LED packages and the DMD mounted to it is typically supplied by an optical OEM who specializes in designing optics for DLP projectors.

A miniature stepper motor can optionally be added to the optical engine for creating a motorized focus. Direct control and driving of the motor can be done by the DLPA200x/DLPA3000, and software commands sent over I^2C to the DLPC3430 or DLPC3435 are available to move the motor to the desired position.

Copyright © 2023 Texas Instruments Incorporated

8.2.3 Application Curve

This device drives current time-sequentially though the LEDs. As the LED currents through the red, green, and blue LEDs increases, the brightness of the projector increases. This increase is somewhat non-linear, and the curve for typical white screen lumens changes with LED currents as shown in 図 8-2. For the LED currents shown, assumed that the same current amplitude is applied to the red, green, and blue.

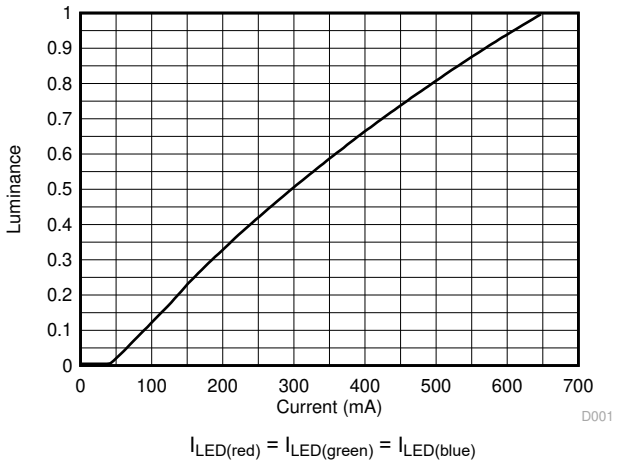

図 8-2. Luminance vs Current

Copyright © 2023 Texas Instruments Incorporated

9 Power Supply Recommendations

The following power supplies are all required to operate the DMD:

- VSS
- VBIAS
- VDD
- VDDI
- VOFFSET
- VRESET

The DLPAxxxx device strictly controls the DMD power-up and power-down sequences as described in 図 9-1.

> **注意**
>
> To ensure reliable operation of the DMD, follow the power supply sequencing requirements described in this section. Failure to adhere to any of these requirements can result in a significant reduction in the DMD reliability and lifetime.
>
> VBIAS, VDD, VDDI, VOFFSET, and VRESET power supplies must be coordinated during power-up and power-down operations . Common ground (VSS) to all lines must also be connected.

9.1 DMD Power Supply Power-Up Procedure

- During the power-up sequence, VDD and VDDI must always start and settle before VOFFSET, VBIAS, and VRESET voltages are applied to the DMD.
- During the power-up sequence, it is a strict requirement that the voltage difference between VBIAS and VOFFSET must be within the specified limit shown in *セクション 6.4*. Refer to 表 9-1 for the power-up sequence, delay requirements.
- During the power-up sequence, there is no requirement for the relative timing of VRESET with respect to VBIAS and VOFFSET.
- Power supply slew rates during the power-up sequence are flexible, provided that the transient voltage levels follow the requirements specified in *セクション 6.1*, in *セクション 6.4*, and in セクション 9.3.
- During the power-up sequence, LPSDR input pins must not be driven high until after VDD/VDDI have settled at operating voltages listed in *セクション 6.4*.

9.2 DMD Power Supply Power-Down Procedure

- The power-down sequence is the reverse order of the previous power-up sequence. During the power-down sequence, VDD and VDDI must be supplied until after VBIAS, VRESET, and VOFFSET are discharged to within 4 V of ground.
- During the power-down sequence, it is a strict requirement that the voltage difference between VBIAS and VOFFSET must be within the specified limit shown in *セクション 6.4*.
- During the power-down sequence, there is no requirement for the relative timing of VRESET with respect to VBIAS and VOFFSET.
- Power supply slew rates during the power-down sequence, are flexible, provided that the transient voltage levels follow the requirements specified in *セクション 6.1*, in *セクション 6.4*, and in セクション 9.3.
- During the power-down sequence, LPSDR input pins must be less than VDD/VDDI specified in *セクション 6.4*.

Copyright © 2023 Texas Instruments Incorporated

9.3 Power Supply Sequencing Requirements

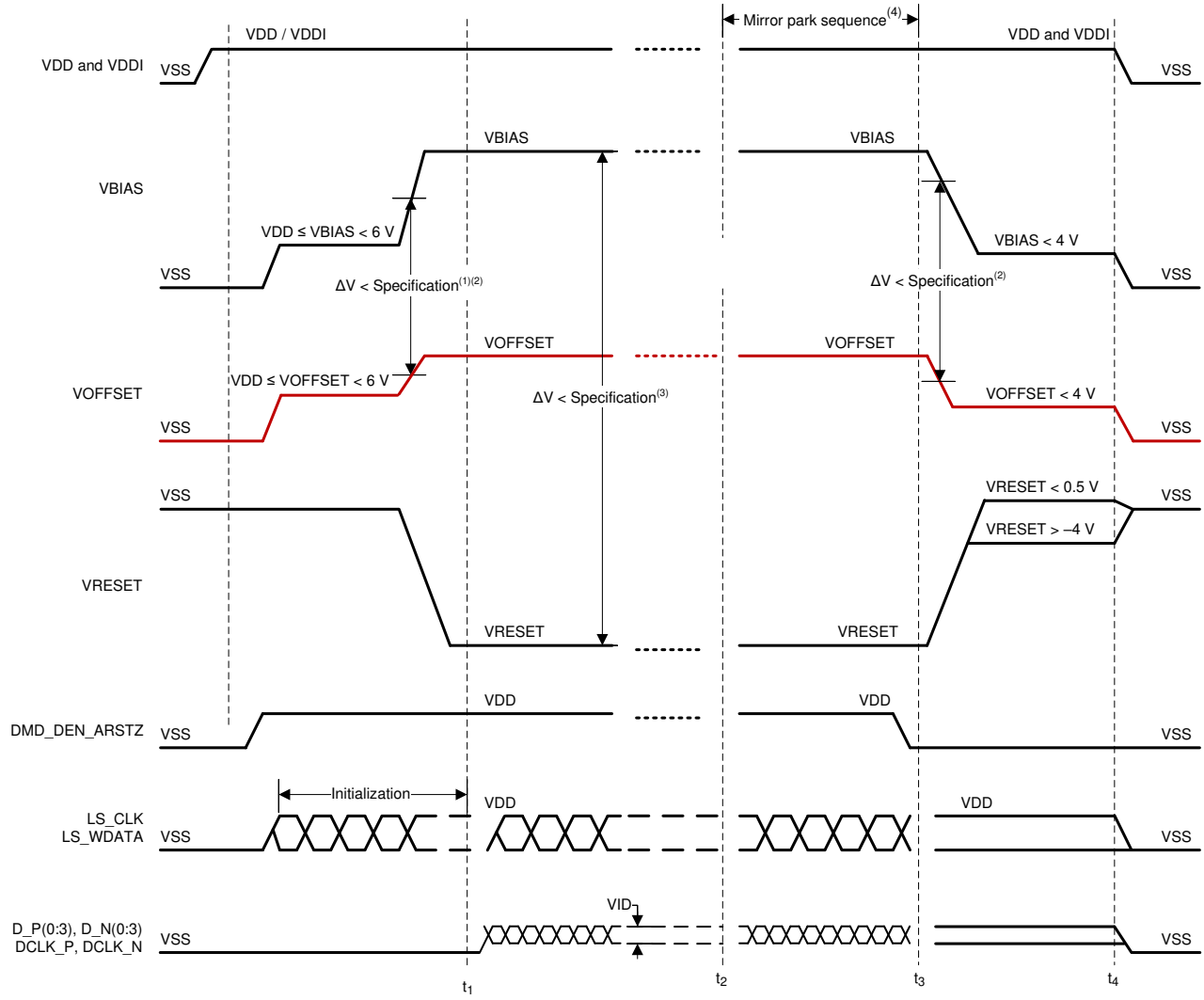

DLP controller and PMIC controls start of DMD operation

Mirror park sequence starts

Mirror park sequence ends. DLP controller and PMIC disables VBIAS, VOFFSET, and VRESET.

Power off.

Refer to 表 9-1 and 図 9-2 for critical power-up sequence delay requirements.

When system power is interrupted, the ASIC driver initiates hardware the power-down sequence, that disables VBIAS, VRESET and VOFFSET after the micromirror park sequence is complete. Software the power-down sequence, disables VBIAS, VRESET, and VOFFSET after the micromirror park sequence through software control.

To prevent excess current, the supply voltage delta |VBIAS – VRESET| must be less than specified limit shown in セクション 6.4.

Drawing is not to scale and details are omitted for clarity.

図 9-1. Power Supply Sequencing Requirements

Copyright © 2023 Texas Instruments Incorporated

表 9-1. Power-Up Sequence Delay Requirement

PARAMETER		MIN	MAX	UNIT
t_{DELAY}	Delay requirement from VOFFSET power up to VBIAS power up	2		ms
VOFFSET	Supply voltage level during power–up sequence delay (see 図 9-2)		6	V
VBIAS	Supply voltage level during power–up sequence delay (see 図 9-2)		6	V

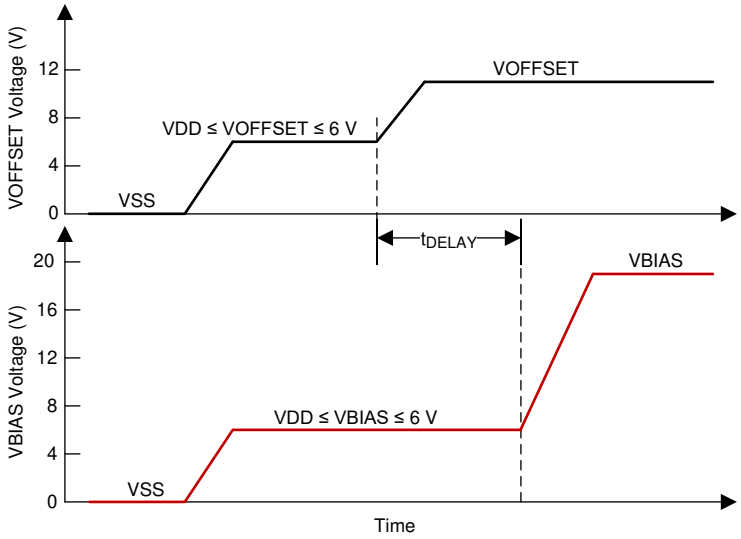

Refer to 表 9-1 for VOFFSET and VBIAS supply voltage levels during power-up sequence delay.

図 9-2. Power-Up Sequence Delay Requirement

10 Layout

10.1 Layout Guidelines

There are no specific layout guidelines because in most cases the DMD is connected using a board-to-board connector to a flex cable. The flex cable provides the interface of data and control signals between the DLPC3430 or DLPC3435 controller and the DLP2010 DMD. For detailed layout guidelines refer to the layout design files.

Layout guidelines for the flex cable interface with DMD are:

- Match lengths for the LS_WDATA and LS_CLK signals.
- Minimize vias, layer changes, and turns for the HS bus signals. Refer 図 10-1.
- Place a decoupling capacitor (minimum 100-nF) close to VBIAS. See capacitor C4 in 図 10-2.
- Place a decoupling capacitor (minimum 100-nF) close to VRST. See capacitor C6 in 図 10-2.
- Place a decoupling capacitor (minimum 220-nF) close to VOFS. See capacitor C7 in 図 10-2.
- Place the optional decoupling capacitor (minimum between 200-nF and 220-nF) to meet the ripple requirements of the DMD. See capacitor C5 in 図 10-2.
- Place a decoupling capacitor (minimum 100-nF) close to VDDI. See capacitor C1 in 図 10-2.
- Place a decoupling capacitor (minimum 100-nF) close to both groups of VDD pins, for a total of 200 nF for VDD. See capacitors C2 and C3 in 図 10-2.

10.2 Layout Example

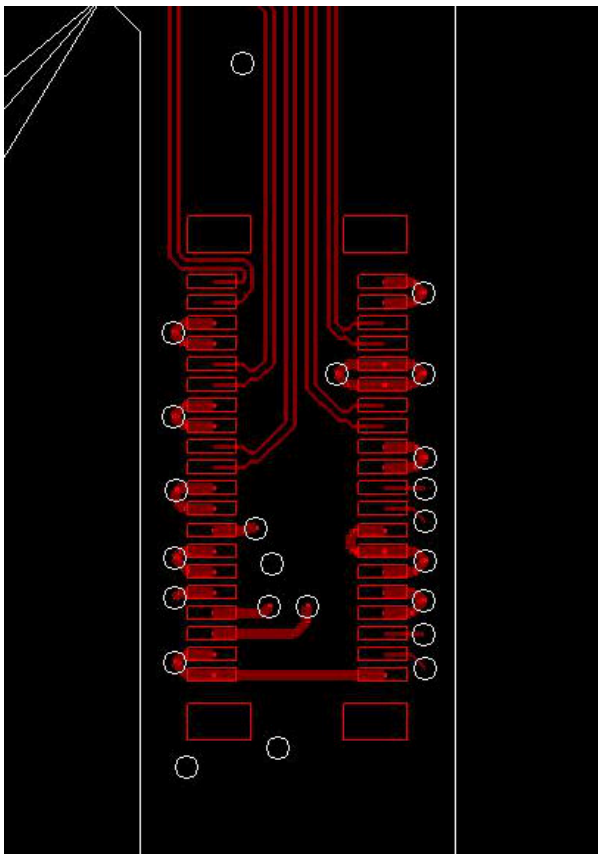

図 10-1. High-Speed (HS) Bus Connections

Copyright © 2023 Texas Instruments Incorporated

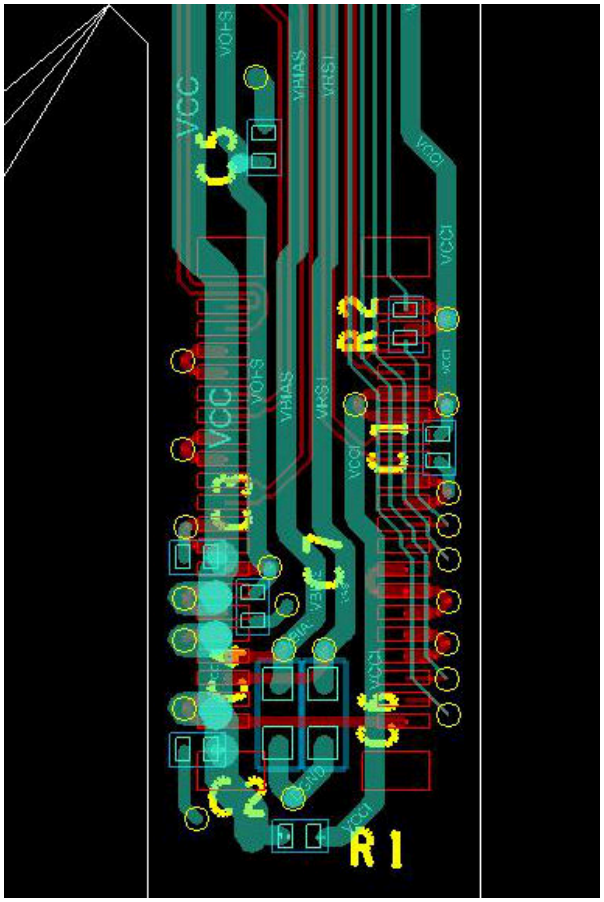

図 10-2. Power Supply Connections

11 Device and Documentation Support

11.1 Device Support

11.1.1 サード・パーティ製品に関する免責事項

サード・パーティ製品またはサービスに関するテキサス・インスツルメンツの出版物は、単独またはテキサス・インスツルメンツの製品、サービスと一緒に提供される場合に関係なく、サード・パーティ製品またはサービスの適合性に関する是認、サード・パーティ製品またはサービスの是認の表明を意味するものではありません。

11.1.2 Device Nomenclature

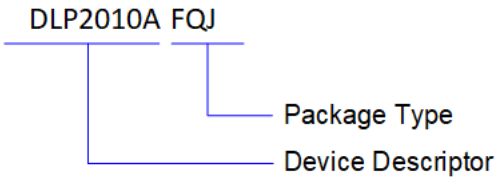

図 11-1. Part Number Description

11.1.3 Device Markings

Device Marking will include the human–readable character string GHJJJJK VVVV on the electrical connector. GHJJJJK is the lot trace code. VVVV is a 4 character encoded device part number.

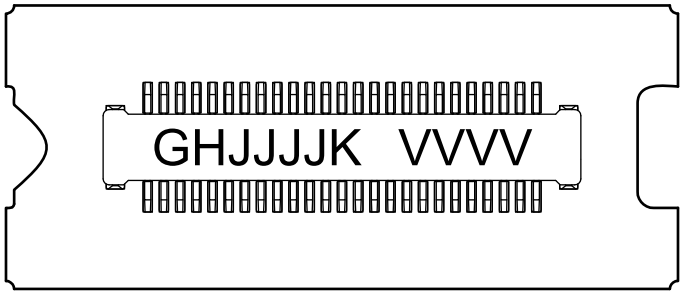

図 11-2. DMD Marking

11.2 Related Links

The table below lists quick access links. Categories include technical documents, support and community resources, tools and software, and quick access to sample or buy.

表 11-1. Related Links

PARTS	PRODUCT FOLDER	SAMPLE & BUY	TECHNICAL DOCUMENTS	TOOLS & SOFTWARE	SUPPORT & COMMUNITY
DLPC3430	Click here	Click here	Click here	Click here	Click here
DLPC3435	Click here	Click here	Click here	Click here	Click here
DLPA2000	Click here	Click here	Click here	Click here	Click here
DLPA2005	Click here	Click here	Click here	Click here	Click here
DLPA3000	Click here	Click here	Click here	Click here	Click here

11.3 ドキュメントの更新通知を受け取る方法

ドキュメントの更新についての通知を受け取るには、ti.com のデバイス製品フォルダを開いてください。「更新の通知を受け取る」をクリックして登録すると、変更されたすべての製品情報に関するダイジェストを毎週受け取れます。変更の詳細については、修正されたドキュメントに含まれている改訂履歴をご覧ください。

Copyright © 2023 Texas Instruments Incorporated

11.4 サポート・リソース

TI E2E™ サポート・フォーラムは、エンジニアが検証済みの回答と設計に関するヒントをエキスパートから迅速かつ直接得ることができる場所です。既存の回答を検索したり、独自の質問をしたりすることで、設計で必要な支援を迅速に得ることができます。

リンクされているコンテンツは、該当する貢献者により、現状のまま提供されるものです。これらは TI の仕様を構成するものではなく、必ずしも TI の見解を反映したものではありません。TI の使用条件を参照してください。

11.5 Trademarks

IntelliBright™ and TI E2E™ are trademarks of Texas Instruments.
DLP® and Pico® are registered trademarks of Texas Instruments.
すべての商標は、それぞれの所有者に帰属します。

11.6 静電気放電に関する注意事項



この IC は、ESD によって破損する可能性があります。テキサス・インスツルメンツは、IC を取り扱う際には常に適切な注意を払うことを推奨します。正しい取り扱いおよび設置手順に従わない場合、デバイスを破損するおそれがあります。

ESD による破損は、わずかな性能低下からデバイスの完全な故障まで多岐にわたります。精密な IC の場合、パラメータがわずかに変化するだけで公表されている仕様から外れる可能性があるため、破損が発生しやすくなっています。

11.7 用語集

テキサス・インスツルメンツ用語集　　この用語集には、用語や略語の一覧および定義が記載されています。

12 Mechanical, Packaging, and Orderable Information

The following pages include mechanical, packaging, and orderable information. This information is the most current data available for the designated devices. This data is subject to change without notice and revision of this document. For browser-based versions of this data sheet, refer to the left-hand navigation.

Copyright © 2023 Texas Instruments Incorporated

PACKAGING INFORMATION

Orderable part number	Status (1)	Material type (2)	Package | Pins	Package qty | Carrier	RoHS (3)	Lead finish/ Ball material (4)	MSL rating/ Peak reflow (5)	Op temp (°C)	Part marking (6)
DLP2010AFQJ	Active	Production	null (null) |	120 | JEDEC TRAY (5+1)	Yes	Call TI	N/A for Pkg Type	0 to 70	
DLP2010AFQJ.A	Active	Production	null (null) |	120 | JEDEC TRAY (5+1)	Yes	Call TI	N/A for Pkg Type	0 to 70	
DLP2010AFQJ.B	Active	Production	null (null) |	120 | JEDEC TRAY (5+1)	Yes	Call TI	N/A for Pkg Type	0 to 70	

(1) **Status:** For more details on status, see our product life cycle.

(2) **Material type:** When designated, preproduction parts are prototypes/experimental devices, and are not yet approved or released for full production. Testing and final process, including without limitation quality assurance, reliability performance testing, and/or process qualification, may not yet be complete, and this item is subject to further changes or possible discontinuation. If available for ordering, purchases will be subject to an additional waiver at checkout, and are intended for early internal evaluation purposes only. These items are sold without warranties of any kind.

(3) **RoHS values:** Yes, No, RoHS Exempt. See the TI RoHS Statement for additional information and value definition.

(4) **Lead finish/Ball material:** Parts may have multiple material finish options. Finish options are separated by a vertical ruled line. Lead finish/Ball material values may wrap to two lines if the finish value exceeds the maximum column width.

(5) **MSL rating/Peak reflow:** The moisture sensitivity level ratings and peak solder (reflow) temperatures. In the event that a part has multiple moisture sensitivity ratings, only the lowest level per JEDEC standards is shown. Refer to the shipping label for the actual reflow temperature that will be used to mount the part to the printed circuit board.

(6) **Part marking:** There may be an additional marking, which relates to the logo, the lot trace code information, or the environmental category of the part.

Multiple part markings will be inside parentheses. Only one part marking contained in parentheses and separated by a "~" will appear on a part. If a line is indented then it is a continuation of the previous line and the two combined represent the entire part marking for that device.

Important Information and Disclaimer: The information provided on this page represents TI's knowledge and belief as of the date that it is provided. TI bases its knowledge and belief on information provided by third parties, and makes no representation or warranty as to the accuracy of such information. Efforts are underway to better integrate information from third parties. TI has taken and continues to take reasonable steps to provide representative and accurate information but may not have conducted destructive testing or chemical analysis on incoming materials and chemicals. TI and TI suppliers consider certain information to be proprietary, and thus CAS numbers and other limited information may not be available for release.

In no event shall TI's liability arising out of such information exceed the total purchase price of the TI part(s) at issue in this document sold by TI to Customer on an annual basis.

重要なお知らせと免責事項

TI は、技術データと信頼性データ (データシートを含みます)、設計リソース (リファレンス デザインを含みます)、アプリケーションや設計に関する各種アドバイス、Web ツール、安全性情報、その他のリソースを、欠陥が存在する可能性のある「現状のまま」提供しており、商品性および特定目的に対する適合性の黙示保証、第三者の知的財産権の非侵害保証を含むいかなる保証も、明示的または黙示的にかかわらず拒否します。

これらのリソースは、TI 製品を使用する設計の経験を積んだ開発者への提供を意図したものです。(1) お客様のアプリケーションに適した TI 製品の選定、(2) お客様のアプリケーションの設計、検証、試験、(3) お客様のアプリケーションに該当する各種規格や、その他のあらゆる安全性、セキュリティ、規制、または他の要件への確実な適合に関する責任を、お客様のみが単独で負うものとします。

上記の各種リソースは、予告なく変更される可能性があります。これらのリソースは、リソースで説明されている TI 製品を使用するアプリケーションの開発の目的でのみ、TI はその使用をお客様に許諾します。これらのリソースに関して、他の目的で複製することや掲載することは禁止されています。TI や第三者の知的財産権のライセンスが付与されている訳ではありません。お客様は、これらのリソースを自身で使用した結果発生するあらゆる申し立て、損害、費用、損失、責任について、TI およびその代理人を完全に補償するものとし、TI は一切の責任を拒否します。

TI の製品は、 TI の販売条件 、 TI の総合的な品質ガイドライン 、 ti.com または TI 製品などに関連して提供される他の適用条件に従い提供されます。TI がこれらのリソースを提供することは、適用される TI の保証または他の保証の放棄の拡大や変更を意味するものではありません。 TI がカスタム、またはカスタマー仕様として明示的に指定していない限り、TI の製品は標準的なカタログに掲載される汎用機器です。

お客様がいかなる追加条項または代替条項を提案する場合も、TI はそれらに異議を唱え、拒否します。

Copyright © 2026, Texas Instruments Incorporated

最終更新日：2025 年 10 月