LMZ31506H 6A、4.5V～14.5V入力、QFNパッケージのパワー・モジュール

1 特長

- 小さな占有面積で低プロファイルの設計を可能にする完全な統合電源ソリューション
- 9mm×15mm×2.8mmのパッケージ
- 最高96%の効率
- 1.2V～5.5Vの範囲で可変の広い出力電圧、リファレンス精度1%
- オプションの分割電源レールにより、最低で1.7Vの入力電圧に対応
- 可変スイッチング周波数(480kHz～780kHz)
- 外部クロックに同期
- 調整可能なスロー・スタート
- 出力電圧のシーケンシングとトラッキング
- パワー・グッド出力
- 低電圧誤動作防止(UVLO)をプログラム可能
- 出力過電流保護
- 過熱保護機能
- プリバイアス出力によるスタートアップ
- 動作温度範囲: -40℃～+85℃
- 強化された熱特性: 13℃/W
- EN55022 Class Bの放射要件に準拠
  - シールド付きインダクタを内蔵
- WEBENCH® Power Designerにより、LMZ31506Hを使用するカスタム設計を作成

2 アプリケーション

- ブロードバンドおよび通信インフラストラクチャ
- 自動試験機器/医療用機器
- Compact PCI、PCI Express、PXI Express
- DSPおよびFPGAのポイント・オブ・ロード・アプリケーション
- 高密度の分散電源システム

効率

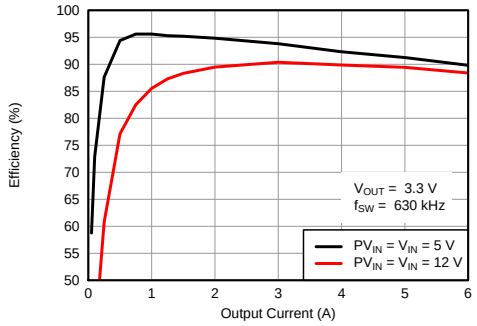

3 概要

LMZ31506Hパワー・モジュールは、6AのDC/DCコンバータをパワーMOSFET、シールド付きインダクタ、およびパッシブ部品とともに低プロファイルのQFNパッケージに実装した、使いやすい統合型電源ソリューションです。わずか3個の外付け部品で完全な電源ソリューションを構築でき、ループ補償や磁気部品の選択プロセスも不要になります。

9×15×2.8mmのQFNパッケージはプリント基板にハンダ付けしやすく、小型のポイント・オブ・ロード設計で、90%を超える効率、優れた消費電力、接合部から周囲へ13℃/Wの熱インピーダンスを実現できます。このデバイスは、周囲温度85℃において無気流でも、6Aの定格出力電流を完全に供給できます。

LMZ31506Hは、ディスクリートPOL設計と同等の柔軟性および機能セットを備え、高性能DSPおよびFPGAへの電力供給に最適です。先進のパッケージング技術により、標準のQFN実装/試験手法に対応した、堅牢で信頼性の高い電源ソリューションを実現できます。

アプリケーション概略図

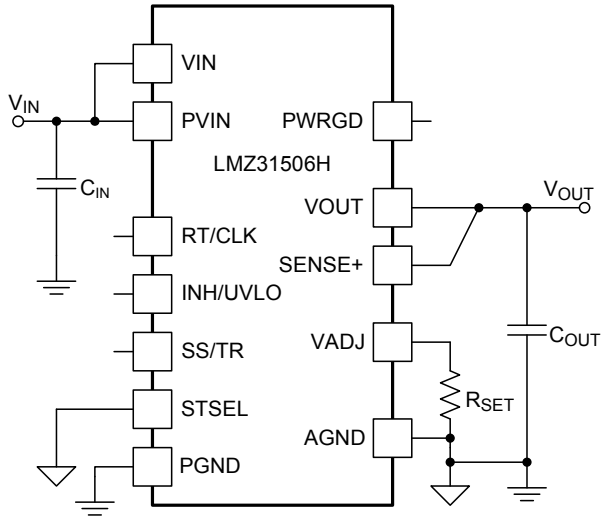

An IMPORTANT NOTICE at the end of this data sheet addresses availability, warranty, changes, use in safety-critical applications, intellectual property matters and other important disclaimers. PRODUCTION DATA.

3.1 Absolute Maximum Ratings[1]

over operating temperature range (unless otherwise noted)

		VALUE	UNIT
Input Voltage	VIN	–0.3 to 16	V
	PVIN	–0.3 to 16	V
	INH/UVLO	–0.3 to 6	V
	VADJ	–0.3 to 3	V
	PWRGD	–0.3 to 6	V
	SS/TR	–0.3 to 3	V
	STSEL	–0.3 to 3	V
	RT/CLK	–0.3 to 6	V
Output Voltage	PH	–1 to 20	V
	PH 10ns Transient	–3 to 20	V
V_{DIFF} (GND to exposed thermal pad)		–0.2 to 0.2	V
Source Current	RT/CLK	±100	µA
	PH	Current Limit	A
Sink Current	PH	Current Limit	A
	PVIN	Current Limit	A
	PWRGD	–0.1 to 5	mA
Operating Junction Temperature		–40 to 125[2]	°C
Storage Temperature		–65 to 150	°C
Peak Reflow Case Temperature[3]		245[4]	°C
Maximum Number of Reflows Allowed[3]		3[4]	
Mechanical Shock	Mil-STD-883D, Method 2002.3, 1 msec, 1/2 sine, mounted	1500	G
Mechanical Vibration	Mil-STD-883D, Method 2007.2, 20-2000Hz	20	

(1) Stresses beyond those listed under absolute maximum ratings may cause permanent damage to the device. These are stress ratings only, and functional operation of the device at these or any other conditions beyond those indicated under recommended operating conditions is not implied. Exposure to absolute-maximum-rated conditions for extended periods may affect device reliability.
(2) See the temperature derating curves in the *Typical Characteristics* section for thermal information.
(3) For soldering specifications, refer to the *Soldering Requirements for BQFN Packages* application note.
(4) Devices with a date code prior to week 14 2018 (1814) have a peak reflow case temperature of 240°C with a maximum of one reflow

Copyright © 2013–2018, Texas Instruments Incorporated

3.2 Thermal Information

THERMAL METRIC[1]		LMZ31506H RUQ47 47 PINS	UNIT
θ_{JA}	Junction-to-ambient thermal resistance[2]	13	°C/W
θ_{JCtop}	Junction-to-case (top) thermal resistance[3]	9	
θ_{JB}	Junction-to-board thermal resistance[4]	6	
ψ_{JT}	Junction-to-top characterization parameter[5]	2.5	
ψ_{JB}	Junction-to-board characterization parameter[6]	5	
θ_{JCbot}	Junction-to-case (bottom) thermal resistance[7]	3.8	

(1) 従来および新しい熱測定値の詳細については、『*Semiconductor and IC Package Thermal Metrics*』アプリケーション・レポート(SPRA953)を参照してください。
(2) 自然対流における、接合部と周囲の空気との間の熱抵抗は、JESD51-2aに記述されている環境において、JESD51-7で規定されているJEDEC標準のHigh-Kボード上でのシミュレーションによって求められます。
(3) 接合部とケース(上面)との間の熱抵抗は、パッケージ上面での冷却板試験のシミュレーションによって求められます。JEDEC規格試験では規定されていませんが、ANSIが策定したSEMI規格のG30-88に類似した記述があります。
(4) 接合部と基板との間の熱抵抗は JESD51-8で説明されているように、PCB温度を制御するリング型冷却板治具で環境をシミュレーションすることにより求められます。
(5) 接合部とケース上部との間の特性パラメータψ_{JT}は、実際のシステムにおけるデバイスの接合部温度を推定するもので、JESD51-2a (セクション6および7)に記述されている手順を用いて、$R_{\theta JA}$を求めるためのシミュレーションデータから抽出されます。
(6) 接合部と基板との間の特性パラメータψ_{JB}は、実際のシステムにおけるデバイスの接合部温度を推定するもので、JESD51-2a (セクション6および7)に記述されている手順を用いて、$R_{\theta JA}$を求めるためのシミュレーションデータから抽出されます。
(7) 接合部とケース(底面)との間の熱抵抗は、露出したパッド(Power PAD)上での冷却板試験のシミュレーションによって求められます。JEDEC規格試験では規定されていませんが、ANSIが策定したSEMI規格のG30-88に類似した内容があります。

3.3 Package Specifications

LMZ31506H		UNIT
Weight		1.26 grams
Flammability	Meets UL 94 V-O	
MTBF Calculated reliability	Per Bellcore TR-332, 50% stress, T_A = 40°C, ground benign	33.9 MHrs

3.4 Electrical Characteristics

over -40°C to 85°C free-air temperature, PVIN = VIN = 12 V, V_{OUT} = 1.8 V, I_{OUT} = 6A,
C_{IN1} = 2 × 22-µF ceramic, C_{IN2} = 68 µF poly-tantalum, C_{OUT1} = 4 × 47-µF ceramic (unless otherwise noted)

PARAMETER		TEST CONDITIONS	MIN	TYP	MAX	UNIT
I_{OUT}	Output current	T_A = 85°C, natural convection	0		6	A
VIN	Input bias voltage range	Over I_{OUT} range	4.5		14.5	V
PVIN	Input switching voltage range	Over I_{OUT} range	1.7[1]		14.5	V
UVLO	VIN Undervoltage lockout	VIN = increasing		4.0	4.5	V
		VIN = decreasing	3.5	3.85		
$V_{OUT(adj)}$	Output voltage adjust range	Over I_{OUT} range	1.2		5.5	V
V_{OUT}	Set-point voltage tolerance	T_A = 25°C, I_{OUT} = 0A			±1.0% [2]	
	Temperature variation	-40°C ≤ T_A ≤ +85°C, I_{OUT} = 0A		±0.3%		
	Line regulation	Over PVIN range, T_A = 25°C, I_{OUT} = 0A		±0.1%		
	Load regulation	Over I_{OUT} range, T_A = 25°C		±0.1%		
	Total output voltage variation	Includes set-point, line, load, and temperature variation			±1.5% [2]	

(1) The minimum PVIN voltage is 1.7V or (V_{OUT}+ 0.5V) , whichever is greater. VIN must be greater than 4.5 V.
(2) The stated limit of the set-point voltage tolerance includes the tolerance of both the internal voltage reference and the internal adjustment resistor. The overall output voltage tolerance will be affected by the tolerance of the external R_{SET} resistor.

Copyright © 2013–2018, Texas Instruments Incorporated

Electrical Characteristics (continued)

over -40°C to 85°C free-air temperature, PVIN = VIN = 12 V, V_{OUT} = 1.8 V, I_{OUT} = 6A, C_{IN1} = 2 × 22-µF ceramic, C_{IN2} = 68 µF poly-tantalum, C_{OUT1} = 4 × 47-µF ceramic (unless otherwise noted)

PARAMETER		TEST CONDITIONS		MIN	TYP	MAX	UNIT
η	Efficiency	PVIN = VIN = 12 V, I_O = 3 A	V_{OUT} = 5V, f_{SW} = 780kHz		93 %		
			V_{OUT} = 3.3V, f_{SW} = 630kHz		90 %		
			V_{OUT} = 2.5V, f_{SW} = 530kHz		89 %		
			V_{OUT} = 1.8V, f_{SW} = 480kHz		87 %		
			V_{OUT} = 1.5V, f_{SW} = 480kHz		85 %		
			V_{OUT} = 1.2V, f_{SW} = 480kHz		83 %		
		PVIN = VIN = 5 V, I_O = 3 A	V_{OUT} = 3.3V, f_{SW} = 630kHz		94 %		
			V_{OUT} = 2.5V, f_{SW} = 530kHz		92 %		
			V_{OUT} = 1.8V, f_{SW} = 480kHz		90 %		
			V_{OUT} = 1.5V, f_{SW} = 480kHz		88 %		
			V_{OUT} = 1.2V, f_{SW} = 480kHz		86 %		
	Output voltage ripple	20 MHz bandwith			30		mV_{PP}
I_{LIM}	Overcurrent threshold				11		A
	Transient response	1.0 A/µs load step from 50 to 100% $I_{OUT(max)}$	Recovery time		80		µs
			V_{OUT} over/undershoot		60		mV
V_{INH-H}	Inhibit Control	Inhibit High Voltage		1.30		Open (3)	V
V_{INH-L}		Inhibit Low Voltage		–0.3		1.05	
	INH Input current	INH < 1.1 V			-1.15		µA
	INH Hysteresis current	INH > 1.26 V			-3.4		µA
$I_{I(stby)}$	Input standby current	INH pin to AGND			2	4	µA
Power Good	PWRGD Thresholds	V_{OUT} rising	Good		94%		
			Fault		109%		
		V_{OUT} falling	Fault		91%		
			Good		106%		
	PWRGD Low Voltage	I(PWRGD) = 2 mA				0.3	V
f_{SW}	Switching frequency	Over VIN and I_{OUT} ranges, RT/CLK pin OPEN		400	480	560	kHz
f_{CLK}	Synchronization frequency	CLK Control		480		780	kHz
V_{CLK-H}	CLK High-Level Threshold			2.0		5.5	V
V_{CLK-L}	CLK Low-Level Threshold					0.8	V
D_{CLK}	CLK Duty cycle			20%		80%	
	Thermal Shutdown	Thermal shutdown		160	175		°C
		Thermal shutdown hysteresis			10		°C
C_{IN}	External input capacitance		Ceramic	44 (4)			µF
			Non-ceramic	68 (4)			
C_{OUT}	External output capacitance	Ceramic		47 (5)	200	1500	µF
		Non-ceramic			220 (5)	5000	
		Equivalent series resistance (ESR)				35	mΩ

(3) This control pin has an internal pullup. If this pin is left open circuit, the device operates when input power is applied. A small low-leakage (<300 nA) MOSFET is recommended for control. See the application section for further guidance.
(4) A minimum of 100µF of polymer tantalum and/or ceramic external capacitance is required across the input (VIN and PVIN connected) for proper operation. Locate the capacitor close to the device. See 表 5 for more details. When operating with split VIN and PVIN rails, place 4.7µF of ceramic capacitance directly at the VIN pin.
(5) The amount of required output capacitance varies depending on the output voltage (see 表 3). The amount of required capacitance must include at least 1x 47µF ceramic capacitor. Locate the capacitance close to the device. Adding additional capacitance close to the load improves the response of the regulator to load transients. See 表 3 and 表 5 more details.

Copyright © 2013–2018, Texas Instruments Incorporated

4 Device Information

Functional Block Diagram

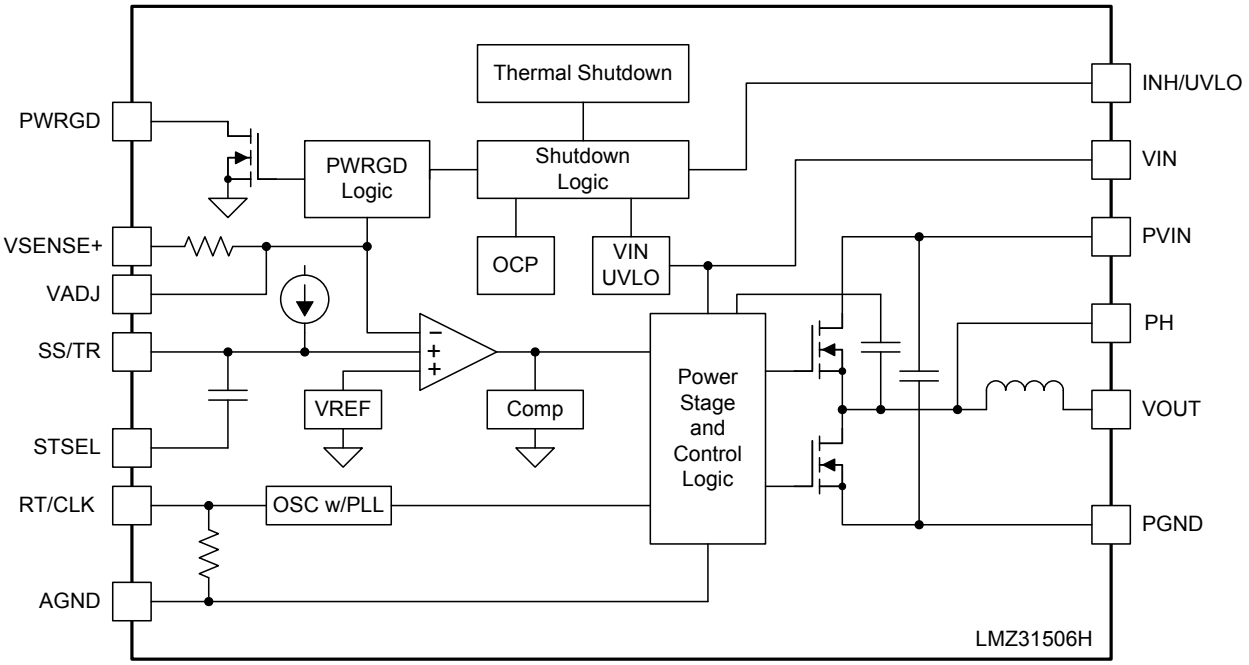

Pin Functions

TERMINAL		DESCRIPTION
NAME	NO.	
AGND	1	Zero VDC reference for the analog control circuitry. Connect AGND to PGND at a single point. Connect near the output capacitors.
	2	
	34	
	45	
INH/UVLO	8	Inhibit and UVLO adjust pin. Use an open drain or open collector output logic to control the INH function. A resistor divider between this pin, AGND and VIN adjusts the UVLO voltage. Tie both pins together when using this control.
	9	
DNC	3	Do not connect. These pins must remain isolated from one another. Do not connect these pins to AGND or to any voltage. These pins must be soldered to isolated pads.
	4	
	5	
	15	
	16	
	18	
	19	
	20	
	22	
	23	
	30	
	31	
	32	
PGND	36	Common ground connection for the PVIN, VIN, and VOUT power connections.
	37	
	38	
PH	10	Phase switch node. These pins should be connected by a small copper island under the device for thermal relief. Do not place any external component on this pin or tie it to a pin of another function.
	11	
	12	
	13	
	14	
	17	
	46	
PWRGD	33	Power good fault pin. Asserts low if the output voltage is low. A pull-up resistor is required.
PVIN	39	Input switching voltage. this pin supplies voltage the power switches of the converter.
	40	
	41	
RT/CLK	35	This pin automatically selects between RT mode and CLK mode. An external timing resistor adjusts the switching frequency of the device. In CLK mode, the device synchronizes to an external clock.
SENSE+	44	Remote sense connection. Connect this pin to VOUT at the load for improved regulation. This pin must be connected to VOUT at the load, or at the device pins.
SS/TR	6	Slow-start and tracking pin. Connecting an external capacitor to this pin adjusts the output voltage rise time. A voltage applied to this pin allows for tracking and sequencing control.
STSEL	7	Slow-start or track feature select. Connect this pin to AGND to enable the internal SS capacitor with a SS interval of approximately 1.1 ms. Leave this pin open to enable the TR feature.
VADJ	43	Connecting a resistor between this pin and AGND sets the output voltage.
VIN	42	Input bias voltage pin. Supplies the control circuitry of the power converter.

Copyright © 2013–2018, Texas Instruments Incorporated

Pin Functions (continued)

TERMINAL		DESCRIPTION
NAME	NO.	
VOUT	21	Output voltage. Connect output capacitors between these pins and PGND.
	24	
	25	
	26	
	27	
	28	
	29	
	47	

RUQ PACKAGE
47 PIN
TOP VIEW

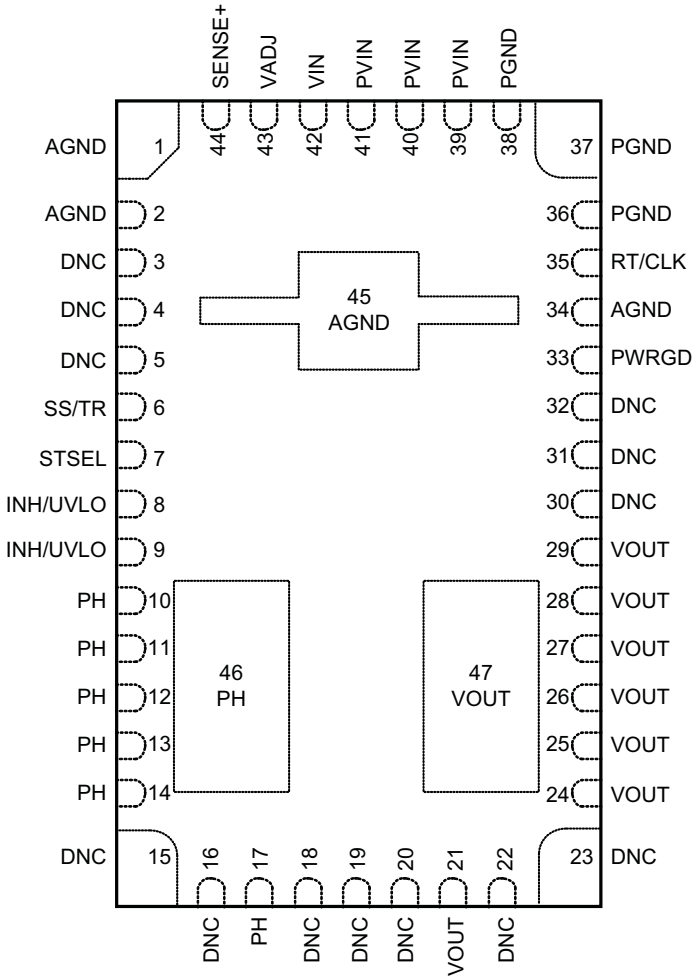

5 Typical Characteristics (PVIN = VIN = 12 V)

The electrical characteristic data has been developed from actual products tested at 25°C. This data is considered typical for the converter. Applies to 図 1, 図 2, and 図 3. The temperature derating curves represent the conditions at which internal components are at or below the manufacturer's maximum operating temperatures. Derating limits apply to devices soldered directly to a 100 mm × 100 mm double-sided PCB with 1 oz. copper. Applies to 図 4.

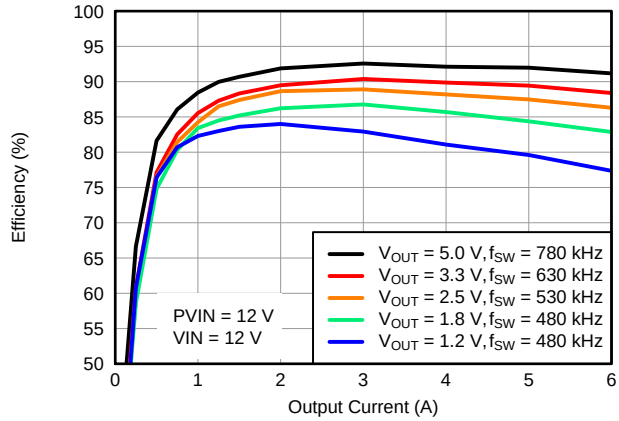

図 1. Efficiency vs. Output Current

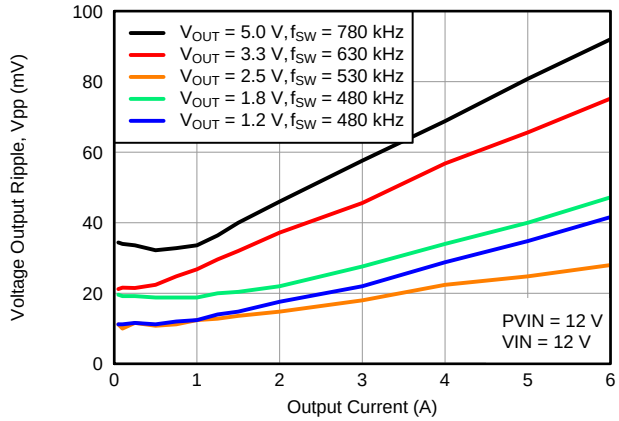

図 2. Voltage Ripple vs. Output Current

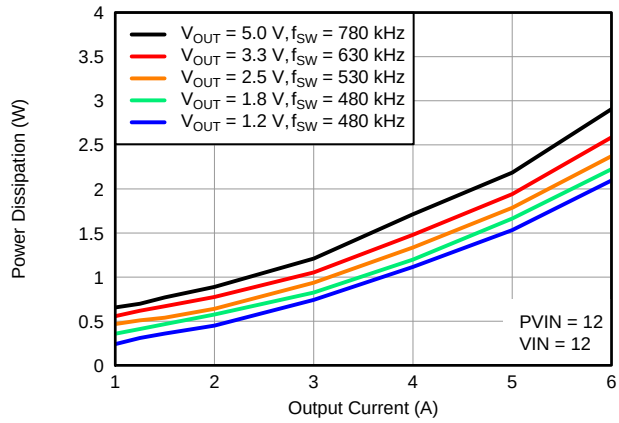

図 3. Power Dissipation vs. Output Current

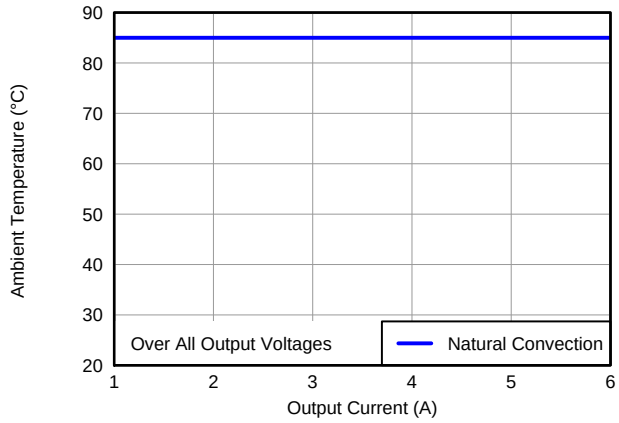

図 4. Safe Operating Area

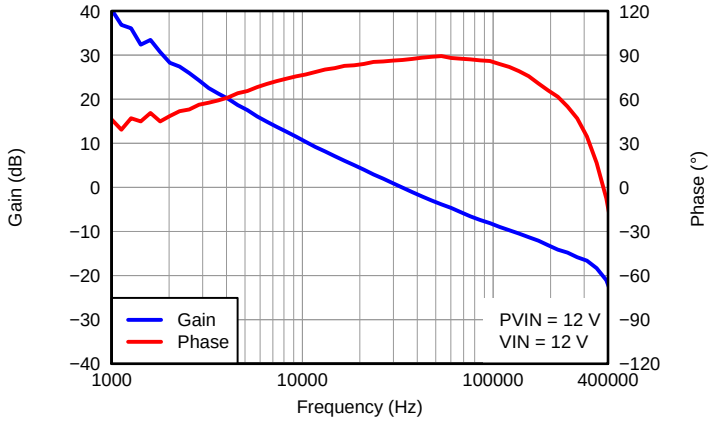

図 5. V_{OUT}=1.2 V, I_{OUT}=3 A, C_{OUT1}=47 µF ceramic, C_{OUT2}= 330 µF POSCAP, f_{SW}=480 kHz

Copyright © 2013–2018, Texas Instruments Incorporated

6 Typical Characteristics (PVIN = VIN = 5 V)

The electrical characteristic data has been developed from actual products tested at 25°C. This data is considered typical for the converter. Applies to 図 6, 図 7, and 図 8. The temperature derating curves represent the conditions at which internal components are at or below the manufacturer's maximum operating temperatures. Derating limits apply to devices soldered directly to a 100 mm × 100 mm double-sided PCB with 1 oz. copper. Applies to 図 9.

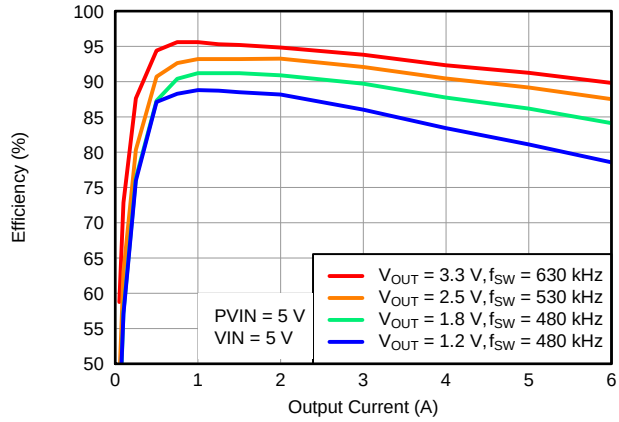

図 6. Efficiency vs. Output Current

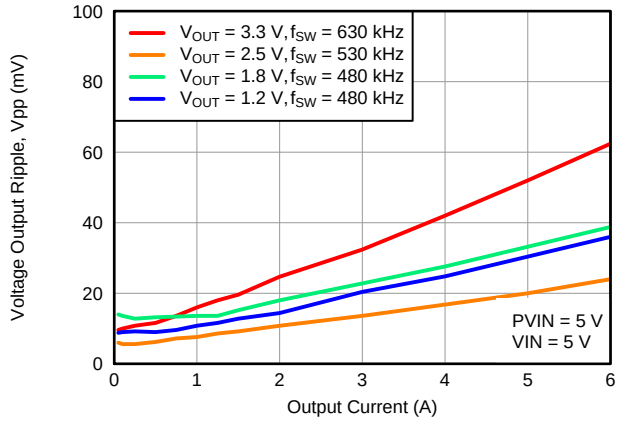

図 7. Voltage Ripple vs. Output Current

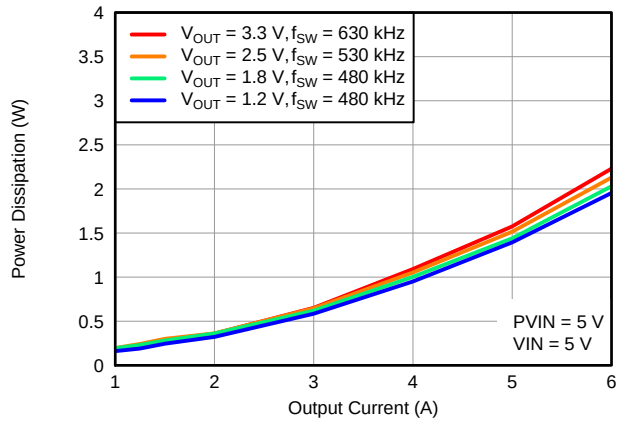

図 8. Power Dissipation vs. Output Current

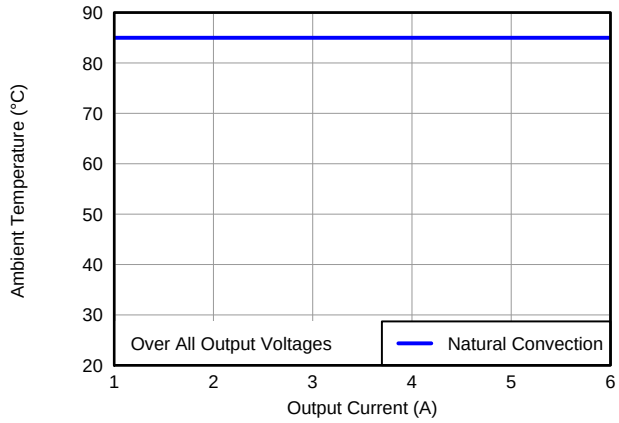

図 9. Safe Operating Area

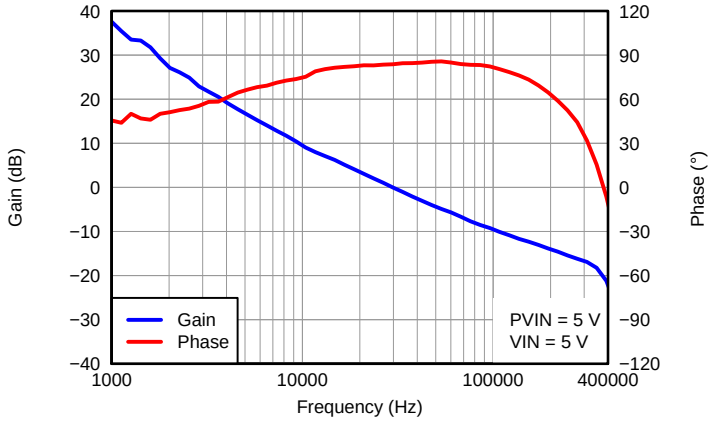

図 10. V_{OUT}=1.2 V, I_{OUT}=3 A, C_{OUT1}=47 µF ceramic, C_{OUT2}= 330 µF POSCAP, f_{SW}=480 kHz

7 Typical Characteristics (PVIN = 12 V, VIN = 5 V)

The electrical characteristic data has been developed from actual products tested at 25°C. This data is considered typical for the converter. Applies to 図 11, 図 12, and 図 13. The temperature derating curves represent the conditions at which internal components are at or below the manufacturer's maximum operating temperatures. Derating limits apply to devices soldered directly to a 100 mm × 100 mm double-sided PCB with 1 oz. copper. Applies to 図 14 and 図 15.

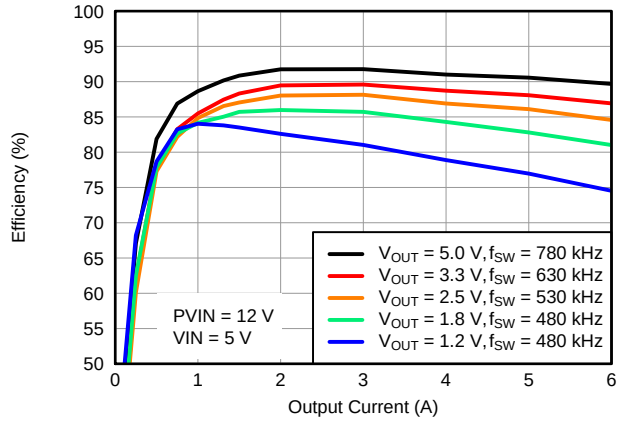

図 11. Efficiency vs. Output Current

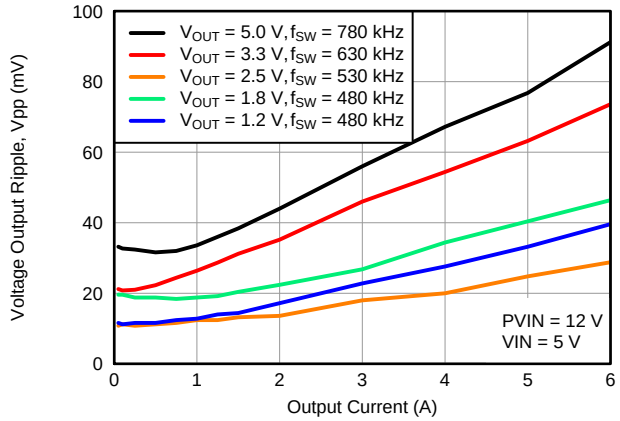

図 12. Voltage Ripple vs. Output Current

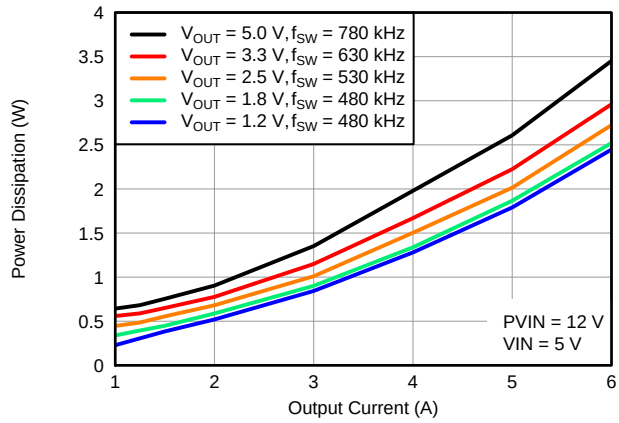

図 13. Power Dissipation vs. Output Current

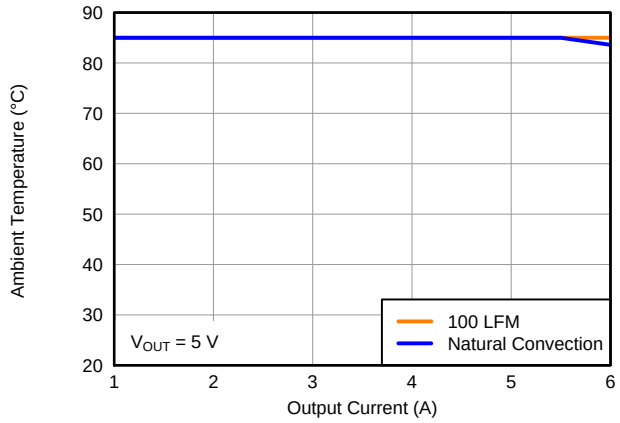

図 14. Safe Operating Area

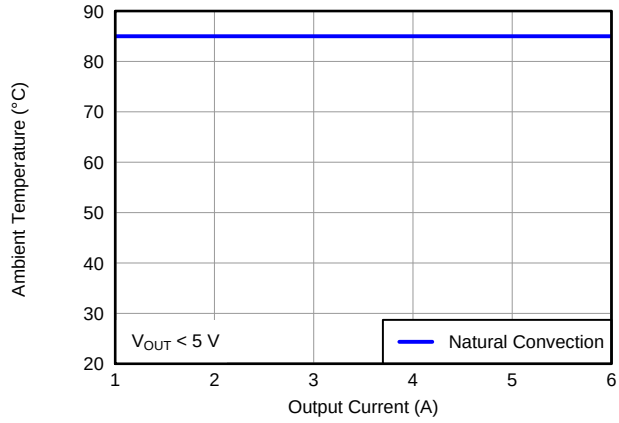

図 15. Safe Operating Area

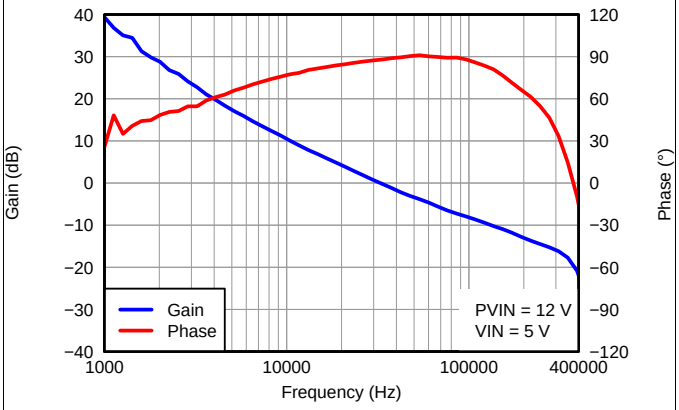

図 16. V_{OUT}=1.2 V, I_{OUT}=3 A, C_{OUT1}=47 µF ceramic, C_{OUT2}= 330 µF POSCAP, f_{SW}=480 kHz

Copyright © 2013–2018, Texas Instruments Incorporated

8 Application Information

8.1 Adjusting the Output Voltage

The VADJ control sets the output voltage of the LMZ31506H. The output voltage adjustment range is from 1.2V to 5.5V. The adjustment method requires the addition of R_{SET}, which sets the output voltage, the connection of SENSE+ to VOUT, and in some cases R_{RT} which sets the switching frequency. The R_{SET} resistor must be connected directly between the VADJ (pin 43) and AGND (pin 45). The SENSE+ pin (pin 44) must be connected to VOUT either at the load for improved regulation or at VOUT of the device. The R_{RT} resistor must be connected directly between the RT/CLK (pin 35) and AGND (pin 34).

表 1 gives the standard external R_{SET} resistor for a number of common bus voltages, along with the required R_{RT} resistor for that output voltage.

表 1. Standard R_{SET} Resistor Values for Common Output Voltages

RESISTORS	OUTPUT VOLTAGE V_{OUT} (V)					
	1.2	1.5	1.8	2.5	3.3	5.0
R_{SET} (kΩ)	2.87	1.62	1.13	0.665	0.453	0.267
R_{RT} (kΩ)	open	open	open	1000	332	165

For other output voltages, the value of the required resistor can either be calculated using the following formula, or simply selected from the range of values given in 表 2.

$$R_{SET} = \frac{1.43}{\left(\left(\frac{V_{OUT}}{0.8}\right) - 1\right)} \ (k\Omega) \tag{1}$$

表 2. Standard R_{SET} Resistor Values

V_{OUT} (V)	R_{SET} (kΩ)	R_{RT}(kΩ)	f_{SW}(kHz)	V_{OUT} (V)	R_{SET} (kΩ)	R_{RT}(kΩ)	f_{SW}(kHz)
1.2	2.87	open	480	3.4	0.442	332	630
1.3	2.26	open	480	3.5	0.422	332	630
1.4	1.91	open	480	3.6	0.402	332	630
1.5	1.62	open	480	3.7	0.392	332	630
1.6	1.43	open	480	3.8	0.374	249	680
1.7	1.27	open	480	3.9	0.365	249	680
1.8	1.13	open	480	4.0	0.357	249	680
1.9	1.02	open	480	4.1	0.348	249	680
2.0	0.953	open	480	4.2	0.332	196	730
2.1	0.866	open	480	4.3	0.324	196	730
2.2	0.806	open	480	4.4	0.316	196	730
2.3	0.750	open	480	4.5	0.309	196	730
2.4	0.715	open	480	4.6	0.301	196	730
2.5	0.665	1000	530	4.7	0.294	196	730
2.6	0.634	1000	530	4.8	0.287	165	780
2.7	0.604	1000	530	4.9	0.280	165	780
2.8	0.562	1000	530	5.0	0.267	165	780
2.9	0.536	1000	530	5.1	0.267	165	780
3.0	0.511	499	580	5.2	0.261	165	780
3.1	0.499	499	580	5.3	0.255	165	780
3.2	0.475	499	580	5.4	0.249	165	780
3.3	0.453	332	630	5.5	0.243	165	780

Copyright © 2013–2018, Texas Instruments Incorporated

8.2 Capacitor Recommendations for the LMZ31506H Power Supply

8.2.1 Capacitor Technologies

8.2.1.1 Electrolytic, Polymer-Electrolytic Capacitors

When using electrolytic capacitors, high-quality, computer-grade electrolytic capacitors are recommended. Polymer-electrolytic type capacitors are recommended for applications where the ambient operating temperature is less than 0°C. The Sanyo OS-CON capacitor series is suggested due to the lower ESR, higher rated surge, power dissipation, ripple current capability, and small package size. Aluminum electrolytic capacitors provide adequate decoupling over the frequency range of 2 kHz to 150 kHz, and are suitable when ambient temperatures are above 0°C.

8.2.1.2 Ceramic Capacitors

The performance of aluminum electrolytic capacitors is less effective than ceramic capacitors above 150 kHz. Multilayer ceramic capacitors have a low ESR and a resonant frequency higher than the bandwidth of the regulator. They can be used to reduce the reflected ripple current at the input as well as improve the transient response of the output.

8.2.1.3 Tantalum, Polymer-Tantalum Capacitors

Polymer-tantalum type capacitors are recommended for applications where the ambient operating temperature is less than 0°C. The Sanyo POSCAP series and Kemet T530 capacitor series are recommended rather than many other tantalum types due to their lower ESR, higher rated surge, power dissipation, ripple current capability, and small package size. Tantalum capacitors that have no stated ESR or surge current rating are not recommended for power applications.

8.2.2 Input Capacitor

The LMZ31506H requires a minimum input capacitance of 100 µF of ceramic and/or polymer-tantalum capacitors. The ripple current rating of the capacitor must be at least 450 mArms. 表 5 includes a preferred list of capacitors by vendor.

8.2.3 Output Capacitor

The required output capacitance is determined by the output voltage of the LMZ31506H. See 表 3 for the amount of required capacitance. The required output capacitance can be comprised of either all ceramic capacitors, or a combination of ceramic and bulk capacitors. The required output capacitance must include at least 1x 47 µF ceramic capacitor. When adding additional non-ceramic bulk capacitors, low-ESR devices like the ones recommended in 表 5 are required. The required capacitance above the minimum is determined by actual transient deviation requirements. See 表 4 for typical transient response values for several output voltage, input voltage and capacitance combinations. 表 5 includes a preferred list of capacitors by vendor.

表 3. Required Output Capacitance

V_{OUT} RANGE (V)		MINIMUM REQUIRED C_{OUT} (µF)
MIN	MAX	
1.2	< 3.0	200 (1)
3.0	< 4.0	100 (1)
4.0	5.5	47 µF ceramic

(1) Minimum required must include at least one 47 µF ceramic capacitor.

Copyright © 2013–2018, Texas Instruments Incorporated

表 4. Output Voltage Transient Response

C_{IN1} = 2 x 22 µF CERAMIC, C_{IN2} = 68 µF POSCAP, LOAD STEP = 3 A, 1 A/µs						
V_{OUT} (V)	PV_{IN} (V)	C_{OUT1} Ceramic	C_{OUT2} BULK	VOLTAGE DEVIATION (mV)	PEAK-PEAK (mV)	RECOVERY TIME (µs)
1.2	3.3	4x 47 µF	None	73	137	70
		1x 47 µF	330 µF	50	90	75
	5	4x 47 µF	None	63	117	70
		1x 47 µF	330 µF	45	85	75
	12	4x 47 µF	None	45	109	70
		1x 47 µF	330 µF	35	70	75
1.5	3.3	4x 47 µF	None	80	160	80
		1x 47 µF	220 µF	65	130	70
	5	4x 47 µF	None	60	115	80
		1x 47 µF	220 µF	60	120	70
	12	4x 47 µF	None	45	98	80
		1x 47 µF	220 µF	50	100	70
1.8	3.3	4x 47 µF	None	90	180	80
		1x 47 µF	220 µF	72	142	110
	5	4x 47 µF	None	80	160	80
		1x 47 µF	220 µF	67	132	110
	12	4x 47 µF	None	60	120	80
		1x 47 µF	220 µF	60	119	110
2.5	3.3	4x 47 µF	None	108	214	75
		1x 47 µF	100 µF	93	186	110
	5	4x 47 µF	None	100	200	75
		1x 47 µF	100 µF	92	180	110
	12	4x 47 µF	None	88	174	75
		1x 47 µF	100 µF	80	157	110
3.3	5	2x 47 µF	None	160	320	100
		1x 47 µF	100 µF	110	220	100
	12	2x 47 µF	None	140	280	100
		1x 47 µF	100 µF	100	200	100
5.0	5	1x 47 µF	None	200	400	100
		1x 47 µF	100 µF	150	300	130
	12	1x 47 µF	None	180	360	100
		1x 47 µF	100 µF	150	300	130

Copyright © 2013–2018, Texas Instruments Incorporated

表 5. Recommended Input/Output Capacitors (1)

VENDOR	SERIES	PART NUMBER	CAPACITOR CHARACTERISTICS		
			WORKING VOLTAGE (V)	CAPACITANCE (µF)	ESR (2) (mΩ)
Murata	X5R	GRM32ER61E226K	16	22	2
TDK	X5R	C3225X5R0J476K	6.3	47	2
Murata	X5R	GRM32ER60J476M	6.3	47	2
Sanyo	POSCAP	16TQC68M	16	68	50
Kemet	T520	T520V107M010ASE025	10	100	25
Sanyo	POSCAP	6TPE100MI	6.3	100	25
Sanyo	POSCAP	2R5TPE220M7	2.5	220	7
Kemet	T530	T530D227M006ATE006	6.3	220	6
Kemet	T530	T530D337M006ATE010	6.3	330	10
Sanyo	POSCAP	2TPF330M6	2.0	330	6
Sanyo	POSCAP	6TPE330MFL	6.3	330	15

(1) **Capacitor Supplier Verification**
Please verify availability of capacitors identified in this table.
RoHS, Lead-free and Material Details
Please consult capacitor suppliers regarding material composition, RoHS status, lead-free status, and manufacturing process requirements.
(2) Maximum ESR @ 100kHz, 25°C.

Copyright © 2013–2018, Texas Instruments Incorporated

8.3 Transient Response

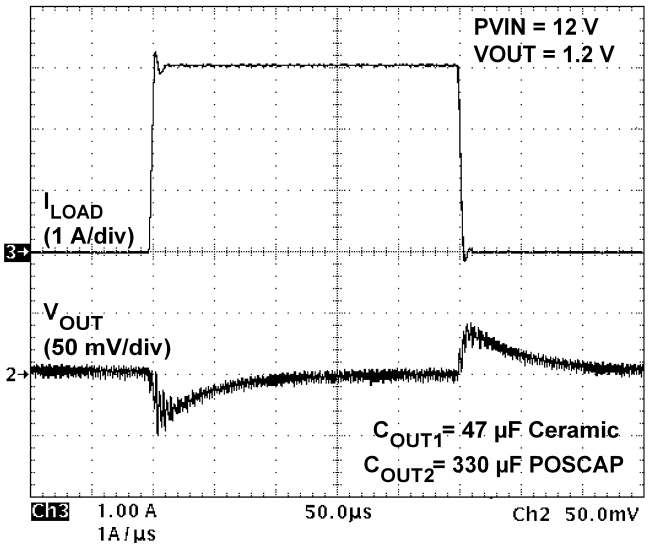

図 17. PVIN = 12V, VOUT = 1.2V, 3A Load Step

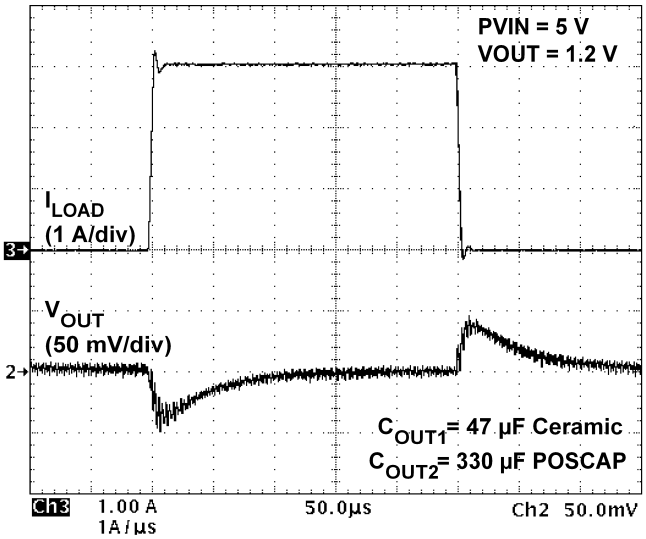

図 18. PVIN = 5V, VOUT = 1.2V, 3A Load Step

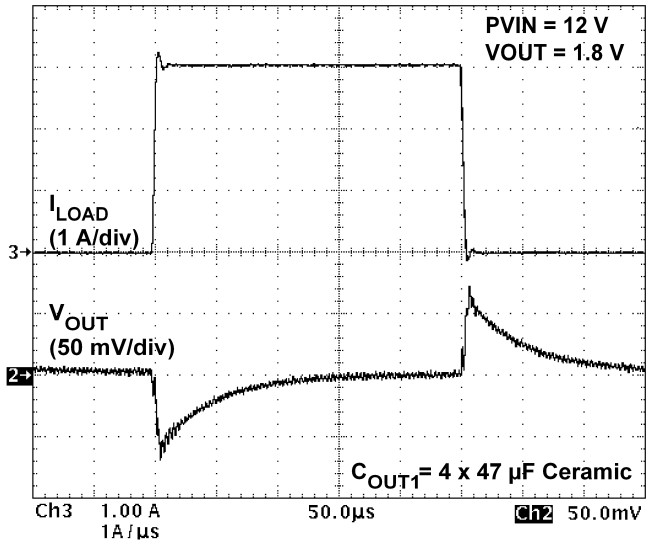

図 19. PVIN = 12V, VOUT = 1.8V, 3A Load Step

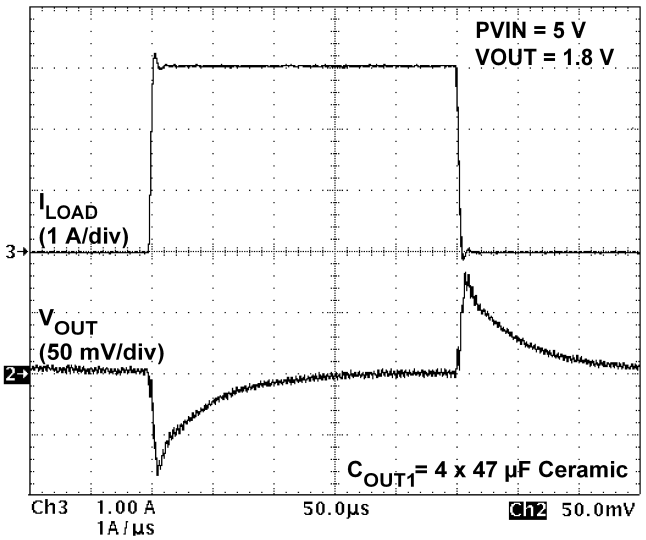

図 20. PVIN = 5V, VOUT = 1.8V, 3A Load Step

Transient Response (continued)

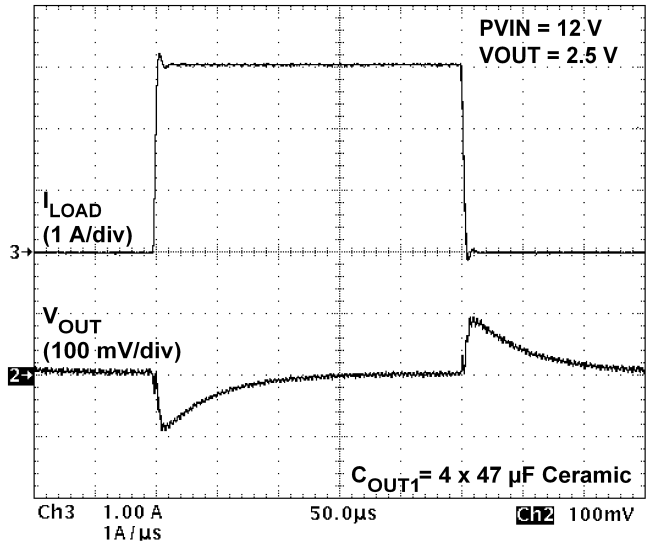

図 21. PVIN = 12V, VOUT = 2.5V, 3A Load Step

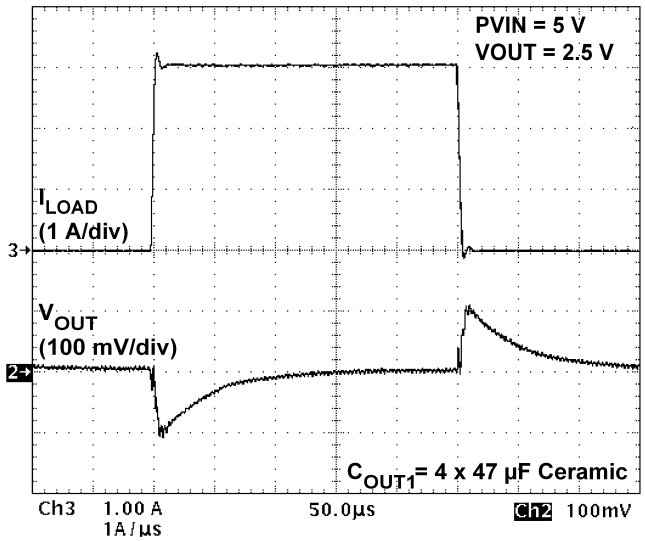

図 22. PVIN = 5V, VOUT = 2.5V, 3A Load Step

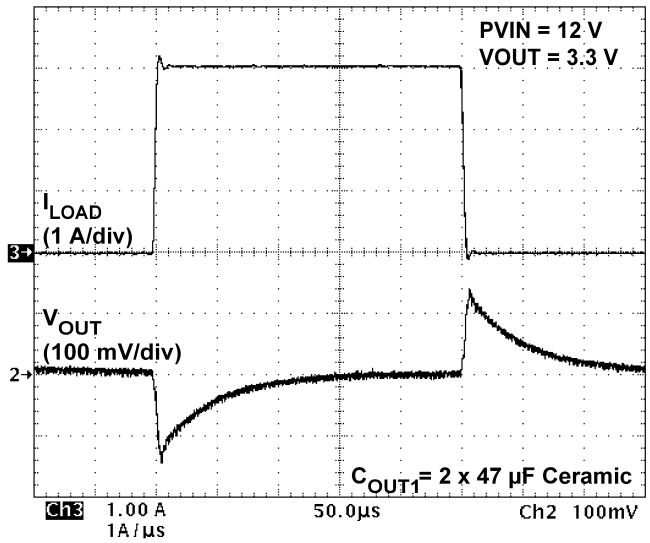

図 23. PVIN = 12V, VOUT = 3.3V, 3A Load Step

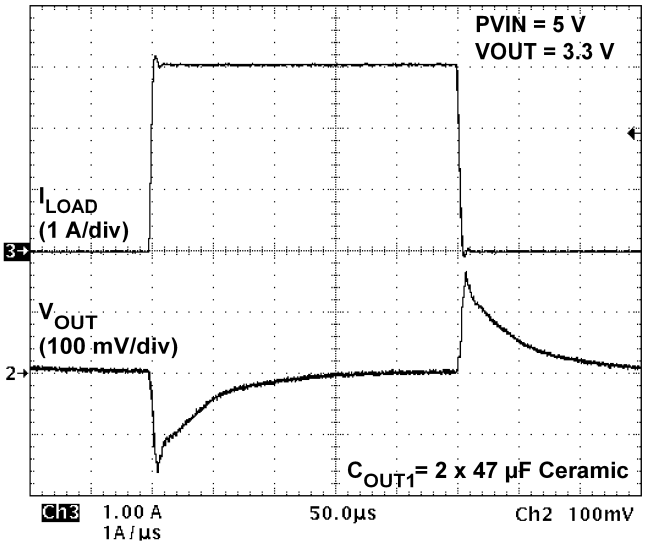

図 24. PVIN = 5V, VOUT = 3.3V, 3A Load Step

Copyright © 2013–2018, Texas Instruments Incorporated

8.4 Application Schematics

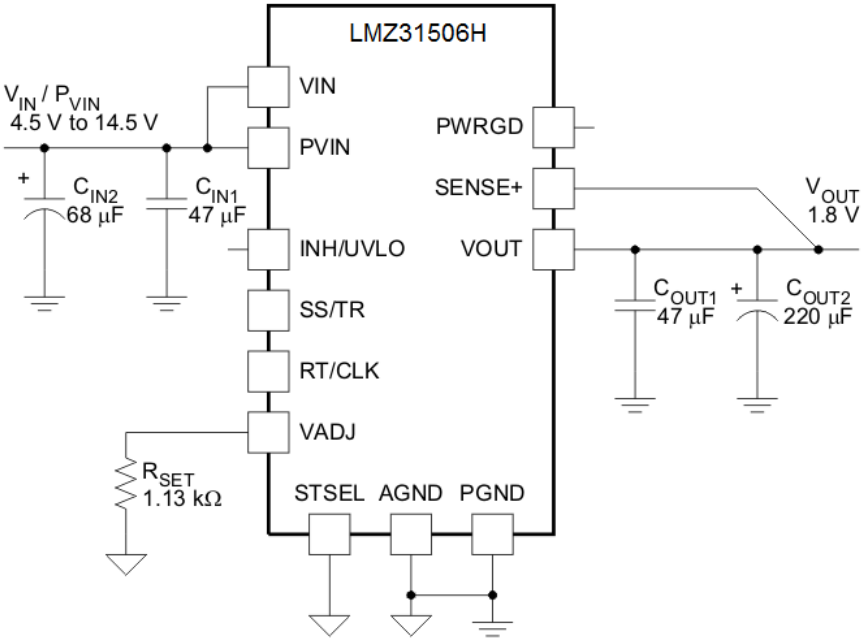

図 25. Typical Schematic
PVIN = VIN = 4.5 V to 14.5 V, VOUT = 1.8 V

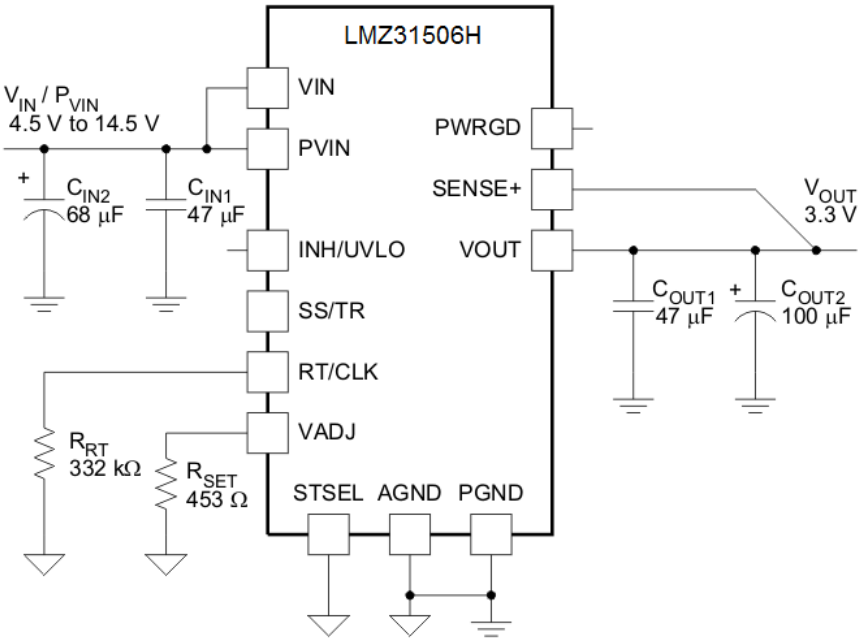

図 26. Typical Schematic
PVIN = VIN = 4.5 V to 14.5 V, VOUT = 3.3 V

Application Schematics (continued)

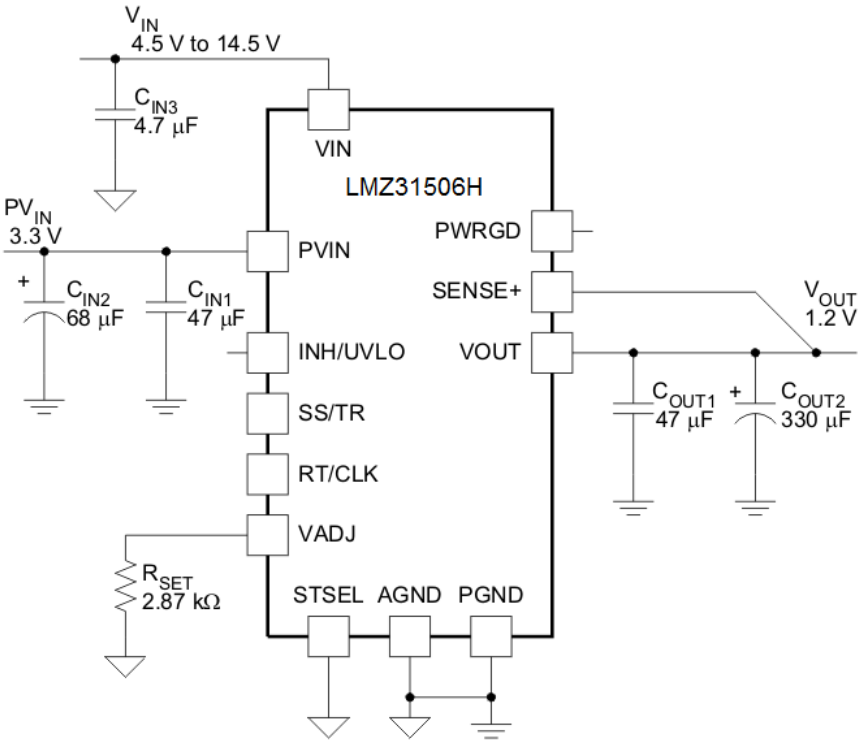

図 27. Typical Schematic
PVIN = 3.3 V, VIN = 4.5 V to 14.5 V, VOUT = 1.2 V

Copyright © 2013–2018, Texas Instruments Incorporated

8.5 Custom Design With WEBENCH® Tools

Click here to create a custom design using the LMZ31506H device with the WEBENCH® Power Designer.

1. Start by entering the input voltage (V_{IN}), output voltage (V_{OUT}), and output current (I_{OUT}) requirements.
2. Optimize the design for key parameters such as efficiency, footprint, and cost using the optimizer dial.
3. Compare the generated design with other possible solutions from Texas Instruments.

The WEBENCH Power Designer provides a customized schematic along with a list of materials with real-time pricing and component availability.

In most cases, these actions are available:

- Run electrical simulations to see important waveforms and circuit performance
- Run thermal simulations to understand board thermal performance
- Export customized schematic and layout into popular CAD formats
- Print PDF reports for the design, and share the design with colleagues

Get more information about WEBENCH tools at www.ti.com/WEBENCH.

8.6 VIN and PVIN Input Voltage

The LMZ31506H allows for a variety of applications by using the VIN and PVIN pins together or separately. The VIN voltage supplies the internal control circuits of the device. The PVIN voltage provides the input voltage to the power converter system.

If tied together, the input voltage for the VIN pin and the PVIN pin can range from 4.5 V to 14.5 V. If using the VIN pin separately from the PVIN pin, the VIN pin must be between 4.5 V and 14.5 V, and the PVIN pin can range from as low as 1.7 V to 14.5 V. A voltage divider connected to the INH/UVLO pin can adjust the either input voltage UVLO appropriately. See the Programmable Undervoltage Lockout (UVLO) section of this datasheet for more information.

8.7 Power Good (PWRGD)

The PWRGD pin is an open drain output. Once the voltage on the SENSE+ pin is between 94% and 106% of the set voltage, the PWRGD pin pull-down is released and the pin floats. The recommended pull-up resistor value is between 10 kΩ and 100 kΩ to a voltage source that is 5.5 V or less. The PWRGD pin is in a defined state once VIN is greater than 1.0 V, but with reduced current sinking capability. The PWRGD pin achieves full current sinking capability once the VIN pin is above 4.5V. The PWRGD pin is pulled low when the voltage on SENSE+ is lower than 91% or greater than 109% of the nominal set voltage. Also, the PWRGD pin is pulled low if the input UVLO or thermal shutdown is asserted, the INH pin is pulled low, or the SS/TR pin is below 1.4 V.

Copyright © 2013–2018, Texas Instruments Incorporated

8.8 Power-Up Characteristics

When configured as shown in the front page schematic, the LMZ31506H produces a regulated output voltage following the application of a valid input voltage. During the power-up, internal soft-start circuitry slows the rate that the output voltage rises, thereby limiting the amount of in-rush current that can be drawn from the input source. The soft-start circuitry introduces a short time delay from the point that a valid input voltage is recognized. 図 28 shows the start-up waveforms for a LMZ31506H, operating from a 5-V input (PVIN=VIN) and with the output voltage adjusted to 1.8 V. 図 29 shows the start-up waveforms for a LMZ31506H starting up into a pre-biased output voltage. The waveforms were measured with a 3-A constant current load.

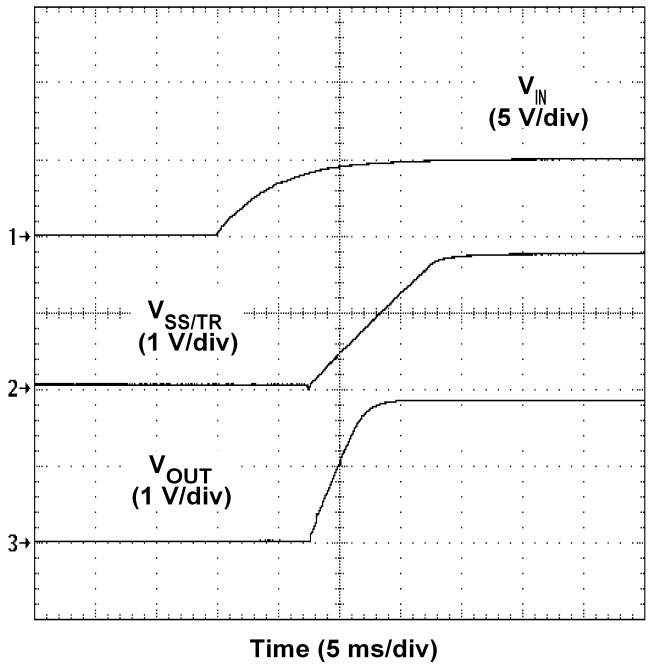

図 28. Start-Up Waveforms

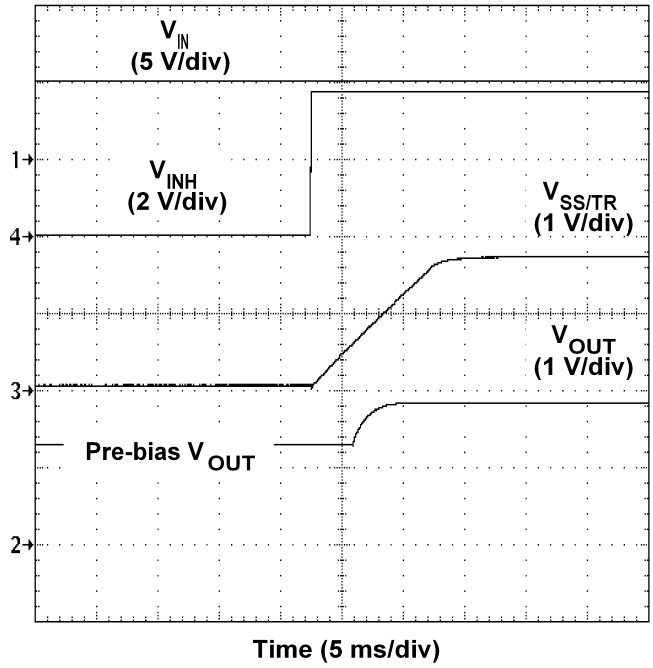

図 29. Start-up into Pre-bias

8.9 Pre-Biased Start-Up

The LMZ31506H has been designed to prevent discharging a pre-biased output. During monotonic pre-biased startup, the LMZ31506H does not allow current to sink until the SS/TR pin voltage is higher than 1.4 V.

8.10 Remote Sense

The SENSE+ pin must be connected to V_{OUT} at the load, or at the device pins.

Connecting the SENSE+ pin to V_{OUT} at the load improves the load regulation performance of the device by allowing it to compensate for any I-R voltage drop between its output pins and the load. An I-R drop is caused by the high output current flowing through the small amount of pin and trace resistance. This should be limited to a maximum of 300 mV.

注

The remote sense feature is not designed to compensate for the forward drop of nonlinear or frequency dependent components that may be placed in series with the converter output. Examples include OR-ing diodes, filter inductors, ferrite beads, and fuses. When these components are enclosed by the SENSE+ connection, they are effectively placed inside the regulation control loop, which can adversely affect the stability of the regulator.

Copyright © 2013–2018, Texas Instruments Incorporated

8.11 Output On/Off Inhibit (INH)

The INH pin provides electrical on/off control of the device. Once the INH pin voltage exceeds the threshold voltage, the device starts operation. If the INH pin voltage is pulled below the threshold voltage, the regulator stops switching and enters low quiescent current state.

The INH pin has an internal pull-up current source, allowing the user to float the INH pin for enabling the device. If an application requires controlling the INH pin, use an open drain/collector device, or a suitable logic gate to interface with the pin.

図 30 shows the typical application of the inhibit function. The Inhibit control has its own internal pull-up to VIN potential. An open-collector or open-drain device is recommended to control this input.

Turning Q1 on applies a low voltage to the inhibit control (INH) pin and disables the output of the supply, shown in 図 31. If Q1 is turned off, the supply executes a soft-start power-up sequence, as shown in 図 32. A regulated output voltage is produced within 10 ms. The waveforms were measured with a 3-A constant current load.

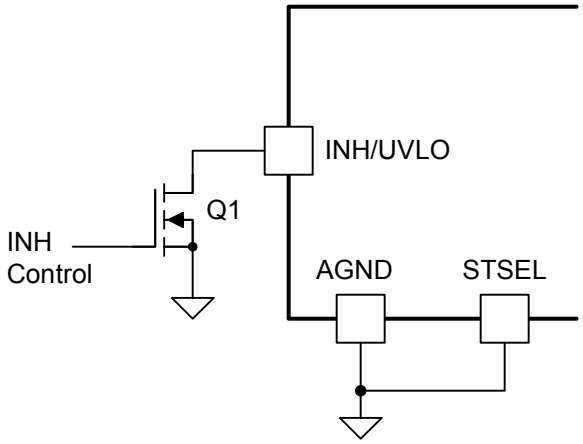

図 30. Typical Inhibit Control

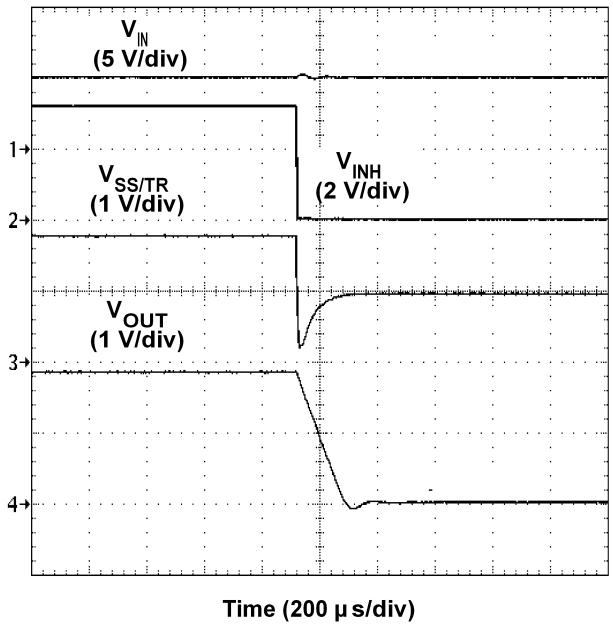

図 31. Inhibit Turn-Off

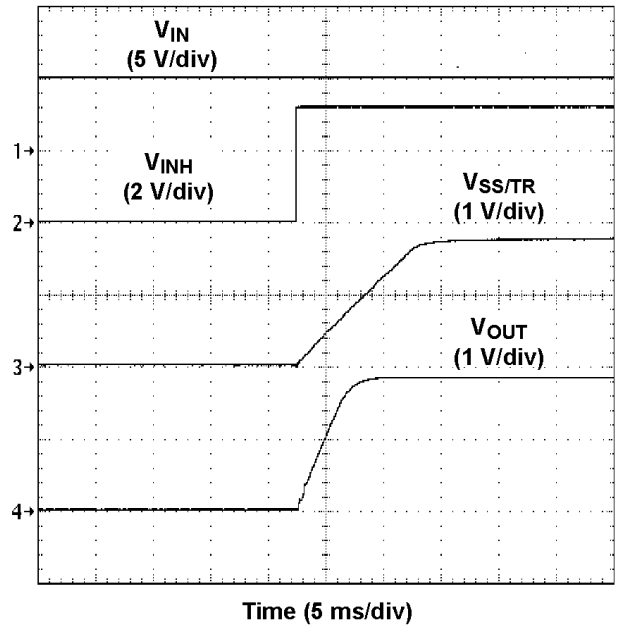

図 32. Inhibit Turn-On

8.12 Slow Start (SS/TR)

Connecting the STSEL pin to AGND and leaving SS/TR pin open enables the internal SS capacitor with a slow start interval of approximately 1.1 ms. Adding additional capacitance between the SS pin and AGND increases the slow start time. 表 6 shows an additional SS capacitor connected to the SS/TR pin and the STSEL pin connected to AGND. See 表 6 below for SS capacitor values and timing interval.

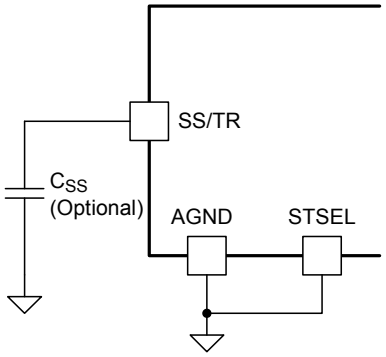

図 33. Slow-Start Capacitor (C_{SS}) and STSEL Connection

表 6. Slow-Start Capacitor Values and Slow-Start Time

C_{SS} (pF)	open	2200	4700	10000	15000	22000	25000
SS Time (msec)	1.1	1.9	2.8	4.6	6.4	8.8	9.8

8.13 Overcurrent Protection

For protection against load faults, the LMZ31506H uses current limiting. The device is protected from overcurrent conditions by cycle-by-cycle current limiting. During an overcurrent condition the output current is limited and the output voltage is reduced, as shown in 図 34. When the overcurrent condition is removed, the output voltage returns to the established voltage, as shown in 図 35.

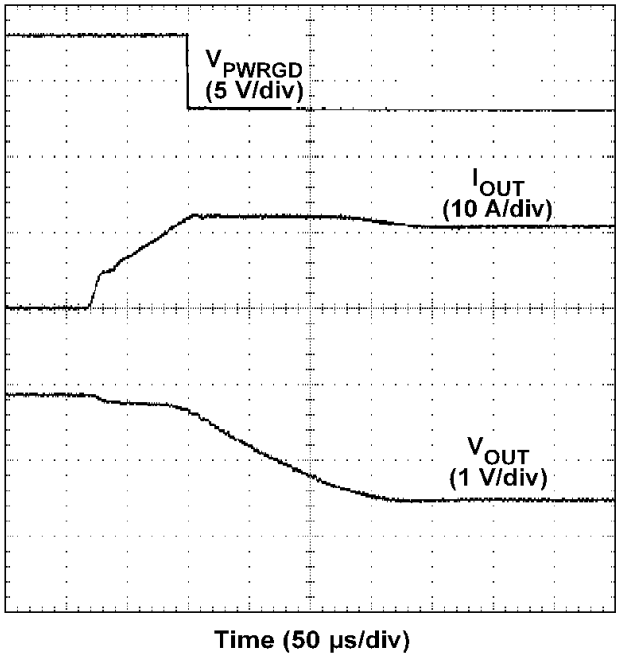

図 34. Overcurrent Limiting

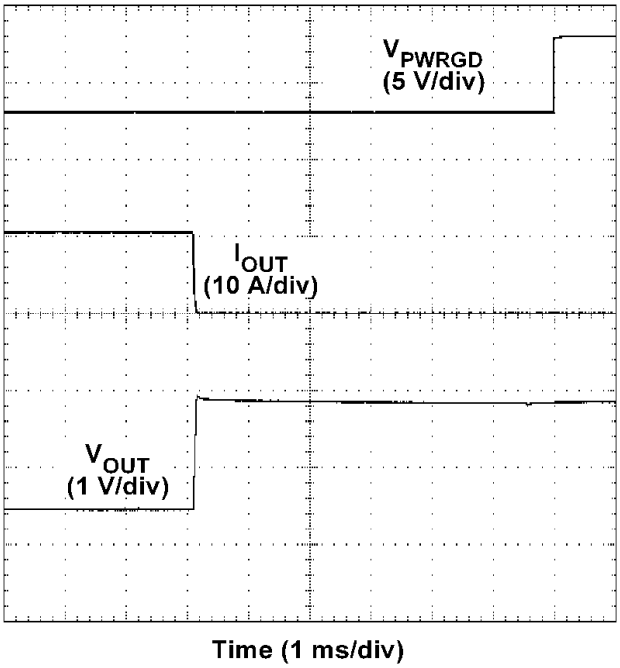

図 35. Removal of Overcurrent Condition

Copyright © 2013–2018, Texas Instruments Incorporated

8.14 Synchronization (CLK)

An internal phase locked loop (PLL) has been implemented to allow synchronization between 480 kHz and 780 kHz, and to easily switch from RT mode to CLK mode. To implement the synchronization feature, connect a square wave clock signal to the RT/CLK pin with a duty cycle between 20% to 80%. The clock signal amplitude must transition lower than 0.8 V and higher than 2.0 V. The start of the switching cycle is synchronized to the falling edge of RT/CLK pin. In applications where both RT mode and CLK mode are needed, the device can be configured as shown in .

Before the external clock is present, the device works in RT mode and the switching frequency is set by RT resistor. When the external clock is present, the CLK mode overrides the RT mode. The first time the CLK pin is pulled above the RT/CLK high threshold (2.0 V), the device switches from RT mode to th CLK mode and the RT/CLK pin becomes high impedance as the PLL starts to lock onto the frequency of the external clock. It is not recommended to switch from CLK mode back to RT mode because the internal switching frequency drops to 100 kHz first before returning to the switching frequency set by the RT resistor (R_{RT}).

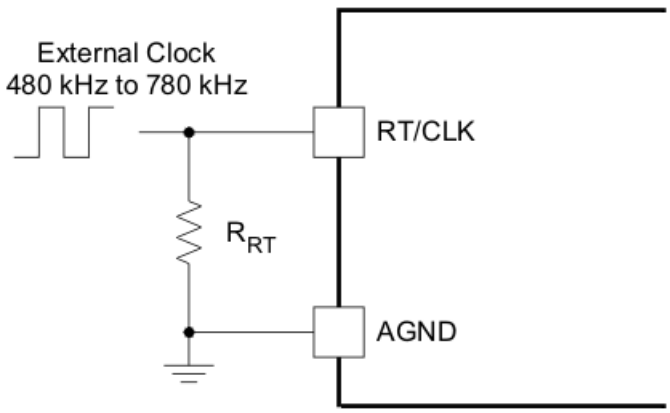

図 36. CLK/RT Configuration

The synchronization frequency must be selected based on the output voltages of the devices being synchronized. 表 7 shows the allowable frequencies for a given range of output voltages. For the most efficient solution, always synchronize to the lowest allowable frequency. For example, an application requires synchronizing three LMZ31506H devices with output voltages of 1.2 V, 1.8 V and 2. 5 V, all powered from PVIN = 12 V. 表 7 shows that all three output voltages can be synchronized to either 530 kHz, 580 kHz, or 630 kHz. For best efficiency, choose 530 kHz as the sychronization frequency.

表 7. Synchronization Frequency vs Output Voltage

SYNCHRONIZATION FREQUENCY (kHz)	R_{RT} (kΩ)	PVIN = 12 V		PVIN = 5 V	
		V_{OUT} RANGE (V)		V_{OUT} RANGE (V)	
		MIN	MAX	MIN	MAX
480	OPEN	1.2	2.5	1.2	4.5
530	1000	1.2	2.9		
580	499	1.2	3.2		
630	332	1.2	3.7		
680	249	1.3	4.1		
730	196	1.4	4.7		
780	165	1.5	5.5		

Copyright © 2013–2018, Texas Instruments Incorporated

8.15 Sequencing (SS/TR)

Many of the common power supply sequencing methods can be implemented using the SS/TR, INH and PWRGD pins. The sequential method is illustrated in 図 37 using two LMZ31506H devices. The PWRGD pin of the first device is coupled to the INH pin of the second device which enables the second power supply once the primary supply reaches regulation. 図 38 shows sequential turn-on waveforms of two LMZ31506H devices.

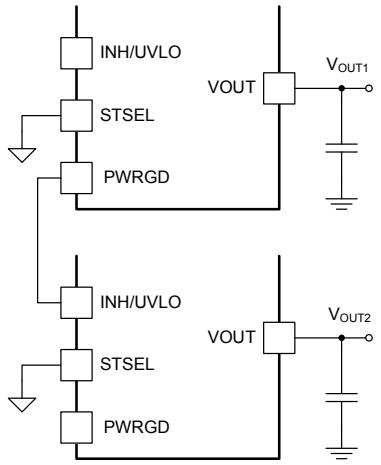

図 37. Sequencing Schematic

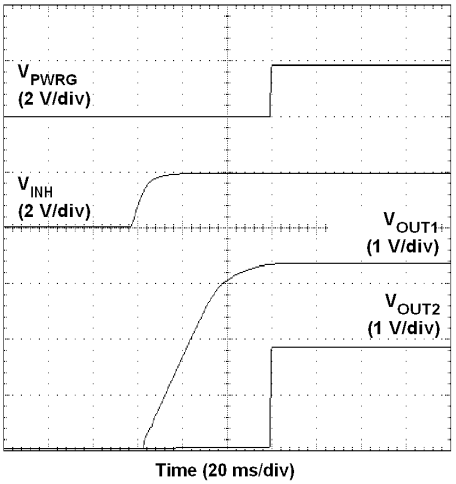

図 38. Sequencing Waveforms

Simultaneous power supply sequencing can be implemented by connecting the resistor network of R1 and R2 shown in 図 39 to the output of the power supply that needs to be tracked or to another voltage reference source. 図 40 shows simultaneous turn-on waveforms of two LMZ31506H devices. Use 式 2 and 式 3 to calculate the values of R1 and R2.

$$R1 = \frac{(V_{OUT2} \times 12.6)}{0.8} (k\Omega) \quad (2)$$

$$R2 = \frac{0.8 \times R1}{(V_{OUT2} - 0.8)} (k\Omega) \quad (3)$$

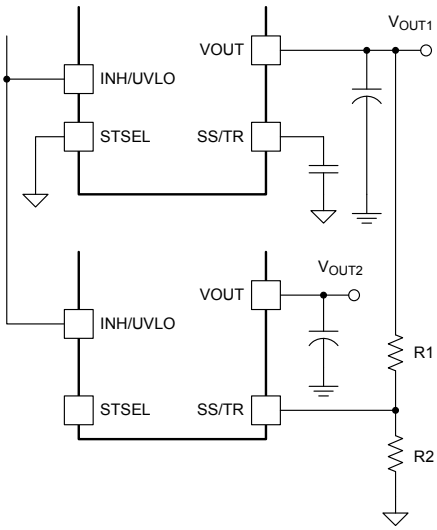

図 39. Simultaneous Tracking Schematic

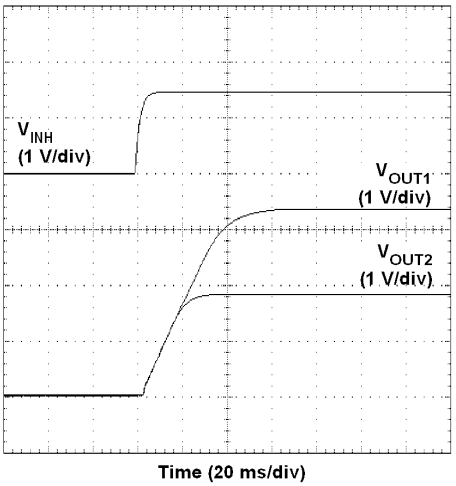

図 40. Simultaneous Tracking Waveforms

Copyright © 2013–2018, Texas Instruments Incorporated

8.16 Programmable Undervoltage Lockout (UVLO)

The LMZ31506H implements internal UVLO circuitry on the VIN pin. The device is disabled when the VIN pin voltage falls below the internal VIN UVLO threshold. The internal VIN UVLO rising threshold is 4.5 V(max) with a typical hysteresis of 150 mV.

If an application requires either a higher UVLO threshold on the VIN pin or a higher UVLO threshold for a combined VIN and PVIN, then the UVLO pin can be configured as shown in 図 41 or 図 42. 表 8 lists standard values for R_{UVLO1} and R_{UVLO2} to adjust the VIN UVLO voltage up.

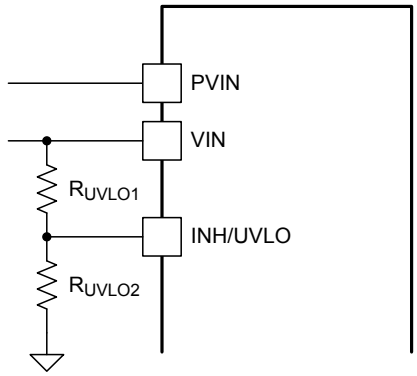

図 41. Adjustable VIN UVLO

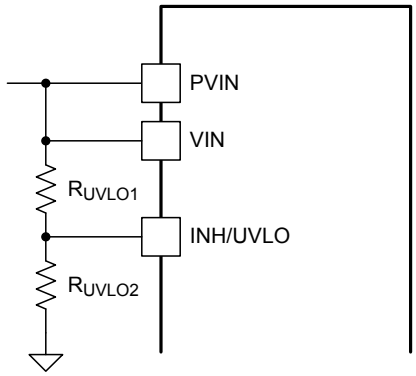

図 42. Adjustable VIN and PVIN Undervoltage Lockout

表 8. Standard Resistor values for Adjusting VIN UVLO

VIN UVLO (V)	5.0	5.5	6.0	6.5	7.0	7.5	8.0	8.5	9.0	9.5	10.0
R_{UVLO1} (kΩ)	68.1	68.1	68.1	68.1	68.1	68.1	68.1	68.1	68.1	68.1	68.1
R_{UVLO2} (kΩ)	21.5	18.7	16.9	15.4	14.0	13.0	12.1	11.3	10.5	9.76	9.31
Hysteresis (V)	400	415	430	450	465	480	500	515	530	550	565

For a split rail application, if a secondary UVLO on PVIN is required, VIN must be ≥ 4.5V. 図 43 shows the PVIN UVLO configuration. Use 表 9 to select R_{UVLO1} and R_{UVLO2} for PVIN. If PVIN UVLO is set for less than 3.0 V, a 5.1-V zener diode should be added to clamp the voltage on the UVLO pin below 6 V.

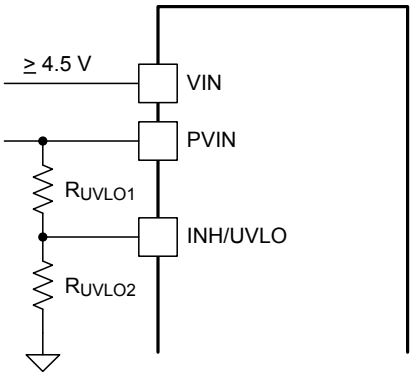

図 43. Adjustable PVIN Undervoltage Lockout, (VIN ≥4.5 V)

表 9. Standard Resistor Values for Adjusting PVIN UVLO, (VIN ≥4.5 V)

PVIN UVLO (V)	2.0	2.5	3.0	3.5	4.0	4.5	
R_{UVLO1} (kΩ)	68.1	68.1	68.1	68.1	68.1	68.1	For higher PVIN UVLO voltages see Table UV for resistor values
R_{UVLO2} (kΩ)	95.3	60.4	44.2	34.8	28.7	24.3	
Hysteresis (V)	300	315	335	350	365	385	

Copyright © 2013–2018, Texas Instruments Incorporated

8.17 Thermal Shutdown

The internal thermal shutdown circuitry forces the device to stop switching if the junction temperature exceeds 175°C typically. The device reinitiates the power up sequence when the junction temperature drops below 165°C typically.

8.18 Layout Considerations

To achieve optimal electrical and thermal performance, an optimized PCB layout is required. 図 44 and 図 45 show two layers of a typical PCB layout. Some considerations for an optimized layout are:

- Use large copper areas for power planes (VIN, VOUT, and PGND) to minimize conduction loss and thermal stress.
- Place ceramic input and output capacitors close to the device pins to minimize high frequency noise.
- Locate additional output capacitors between the ceramic capacitor and the load.
- Place a dedicated AGND copper area beneath the LMZ31506H.
- Isolate the PH copper area from the VOUT copper area using the AGND copper area.
- Connect the AGND and PGND copper area at one point as ahown below.
- Place R_{SET}, R_{RT}, and C_{SS} as close as possible to their respective pins.
- Use multiple vias to connect the power planes to internal layers.

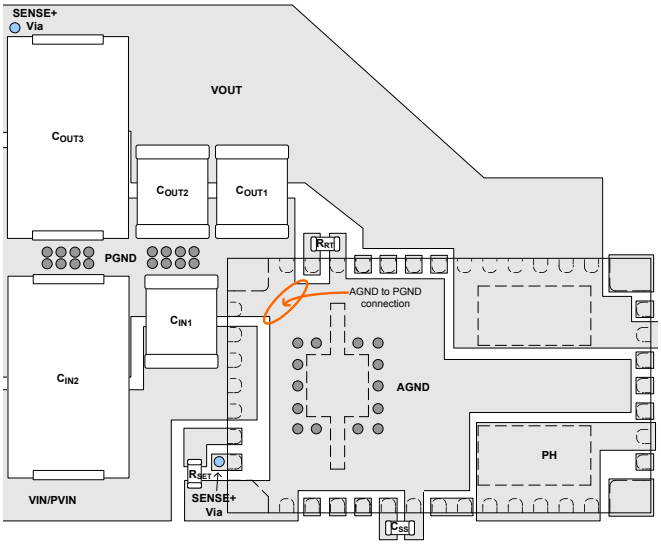

図 44. Typical Top-Layer Recommended Layout

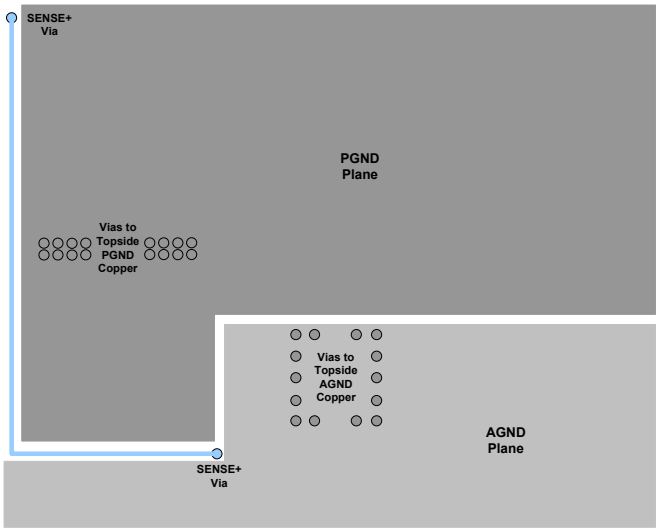

図 45. Typical GND-Layer Recommended Layout

Copyright © 2013–2018, Texas Instruments Incorporated

8.19 EMI

The LMZ31506H is compliant with EN55022 Class B radiated emissions. 図 46 and 図 47 show typical examples of radiated emissions plots for the LMZ31506H operating from 5V and 12V respectively. Both graphs include the plots of the antenna in the horizontal and vertical positions.

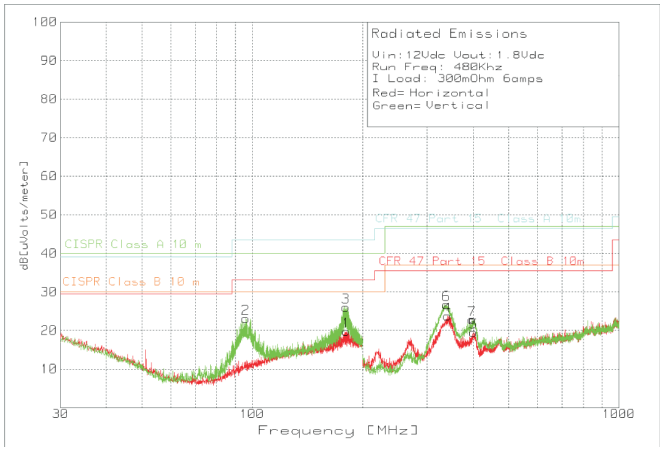

図 46. Radiated Emissions 5-V Input, 1.8-V Output, 6-A Load (EN55022 Class B)

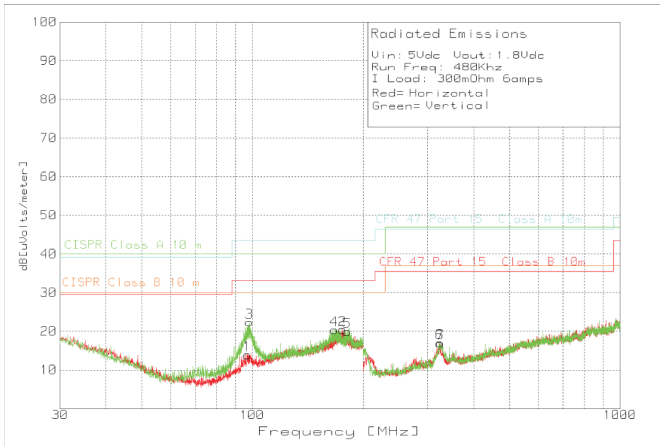

図 47. Radiated Emissions 12-V Input, 1.8-V Output, 6-A Load (EN55022 Class B)

9 Revision History

資料番号末尾の英字は改訂を表しています。その改訂履歴は英語版に準じています。

から変更 Revision A (June 2017) to Revision B **Page**

- LMZ31506H用のWEBENCH®設計リンクを追加 1
- Increased the peak reflow temperature and maximum number of reflows to JEDEC specifications for improved manufacturability 2
- 「*開発サポート*」セクションを追加 29
- 「*メカニカル、パッケージ、および注文情報*」セクションを追加 30

から変更 Original (July 2013) to Revision A **Page**

- Added peak reflow and maximum number of reflows information 2
- 変更 (corrected) typographical error. 19

Copyright © 2013–2018, Texas Instruments Incorporated

10 デバイスおよびドキュメントのサポート

10.1 デバイス・サポート

10.1.1 デベロッパー・ネットワークの製品に関する免責事項

デベロッパー・ネットワークの製品またはサービスに関するTIの出版物は、単独またはTIの製品、サービスと一緒に提供される場合に関係なく、デベロッパー・ネットワークの製品またはサービスの適合性に関する是認、デベロッパー・ネットワークの製品またはサービスの是認の表明を意味するものではありません。

10.1.2 開発サポート

10.1.2.1 WEBENCH®ツールによるカスタム設計

ここをクリックすると、WEBENCH® Power Designerにより、LMZ31506Hデバイスを使用するカスタム設計を作成できます。

1. 最初に、入力電圧(V_{IN})、出力電圧(V_{OUT})、出力電流(I_{OUT})の要件を入力します。
2. オプティマイザのダイヤルを使用して、効率、占有面積、コストなどの主要なパラメータについて設計を最適化します。
3. 生成された設計を、テキサス・インスツルメンツが提供する他のソリューションと比較します。

WEBENCH Power Designerでは、カスタマイズされた回路図と部品リストを、リアルタイムの価格と部品の在庫情報と併せて参照できます。

ほとんどの場合、次の操作を実行可能です。

- 電気的なシミュレーションを実行し、重要な波形と回路の性能を確認する。
- 熱シミュレーションを実行し、基板の熱特性を把握する。
- カスタマイズされた回路図やレイアウトを、一般的なCADフォーマットでエクスポートする。
- 設計のレポートをPDFで印刷し、同僚と設計を共有する。

WEBENCHツールの詳細は、www.ti.com/WEBENCHでご覧になれます。

10.2 ドキュメントのサポート

10.2.1 関連資料

関連資料については、以下を参照してください。

『BQFNパッケージのハンダ付け要件』

10.3 ドキュメントの更新通知を受け取る方法

ドキュメントの更新についての通知を受け取るには、ti.comのデバイス製品フォルダを開いてください。右上の隅にある「*通知を受け取る*」をクリックして登録すると、変更されたすべての製品情報に関するダイジェストを毎週受け取れます。変更の詳細については、修正されたドキュメントに含まれている改訂履歴をご覧ください。

10.4 コミュニティ・リソース

The following links connect to TI community resources. Linked contents are provided "AS IS" by the respective contributors. They do not constitute TI specifications and do not necessarily reflect TI's views; see TI's Terms of Use.

TI E2E™オンライン・コミュニティ ***TIのE2E（Engineer-to-Engineer）コミュニティ。***エンジニア間の共同作業を促進するために開設されたものです。e2e.ti.comでは、他のエンジニアに質問し、知識を共有し、アイディアを検討して、問題解決に役立てることができます。

設計サポート ***TIの設計サポート*** 役に立つE2Eフォーラムや、設計サポート・ツールをすばやく見つけることができます。技術サポート用の連絡先情報も参照できます。

10.5 商標

E2E is a trademark of Texas Instruments.
WEBENCH is a registered trademark of Texas Instruments.
All other trademarks are the property of their respective owners.

10.6 静電気放電に関する注意事項

すべての集積回路は、適切なESD保護方法を用いて、取扱いと保存を行うようにして下さい。

静電気放電はわずかな性能の低下から完全なデバイスの故障に至るまで、様々な損傷を与えます。高精度の集積回路は、損傷に対して敏感であり、極めてわずかなパラメータの変化により、デバイスに規定された仕様に適合しなくなる場合があります。

10.7 Glossary

SLYZ022 — *TI Glossary*.

This glossary lists and explains terms, acronyms, and definitions.

11 メカニカル、パッケージ、および注文情報

以降のページには、メカニカル、パッケージ、および注文に関する情報が記載されています。この情報は、そのデバイスについて利用可能な最新のデータです。このデータは予告なく変更されることがあり、ドキュメントが改訂される場合もあります。本データシートのブラウザ版を使用されている場合は、画面左側の説明をご覧ください。

Copyright © 2013–2018, Texas Instruments Incorporated

PACKAGING INFORMATION

Orderable part number	Status (1)	Material type (2)	Package | Pins	Package qty | Carrier	RoHS (3)	Lead finish/ Ball material (4)	MSL rating/ Peak reflow (5)	Op temp (°C)	Part marking (6)
LMZ31506HRUQR	Active	Production	B1QFN (RUQ) | 47	500 | LARGE T&R	Exempt	NIPDAU	Level-3-245C-168 HR	-40 to 85	LMZ31506H
LMZ31506HRUQR.A	Active	Production	B1QFN (RUQ) | 47	500 | LARGE T&R	Exempt	NIPDAU	Level-3-245C-168 HR	-40 to 85	LMZ31506H
LMZ31506HRUQT	Active	Production	B1QFN (RUQ) | 47	250 | SMALL T&R	Exempt	NIPDAU	Level-3-245C-168 HR	-40 to 85	LMZ31506H
LMZ31506HRUQT.A	Active	Production	B1QFN (RUQ) | 47	250 | SMALL T&R	Exempt	NIPDAU	Level-3-245C-168 HR	-40 to 85	LMZ31506H

(1) **Status:** For more details on status, see our product life cycle.

(2) **Material type:** When designated, preproduction parts are prototypes/experimental devices, and are not yet approved or released for full production. Testing and final process, including without limitation quality assurance, reliability performance testing, and/or process qualification, may not yet be complete, and this item is subject to further changes or possible discontinuation. If available for ordering, purchases will be subject to an additional waiver at checkout, and are intended for early internal evaluation purposes only. These items are sold without warranties of any kind.

(3) **RoHS values:** Yes, No, RoHS Exempt. See the TI RoHS Statement for additional information and value definition.

(4) **Lead finish/Ball material:** Parts may have multiple material finish options. Finish options are separated by a vertical ruled line. Lead finish/Ball material values may wrap to two lines if the finish value exceeds the maximum column width.

(5) **MSL rating/Peak reflow:** The moisture sensitivity level ratings and peak solder (reflow) temperatures. In the event that a part has multiple moisture sensitivity ratings, only the lowest level per JEDEC standards is shown. Refer to the shipping label for the actual reflow temperature that will be used to mount the part to the printed circuit board.

(6) **Part marking:** There may be an additional marking, which relates to the logo, the lot trace code information, or the environmental category of the part.

Multiple part markings will be inside parentheses. Only one part marking contained in parentheses and separated by a "~" will appear on a part. If a line is indented then it is a continuation of the previous line and the two combined represent the entire part marking for that device.

Important Information and Disclaimer: The information provided on this page represents TI's knowledge and belief as of the date that it is provided. TI bases its knowledge and belief on information provided by third parties, and makes no representation or warranty as to the accuracy of such information. Efforts are underway to better integrate information from third parties. TI has taken and continues to take reasonable steps to provide representative and accurate information but may not have conducted destructive testing or chemical analysis on incoming materials and chemicals. TI and TI suppliers consider certain information to be proprietary, and thus CAS numbers and other limited information may not be available for release.

In no event shall TI's liability arising out of such information exceed the total purchase price of the TI part(s) at issue in this document sold by TI to Customer on an annual basis.

TAPE AND REEL INFORMATION

REEL DIMENSIONS

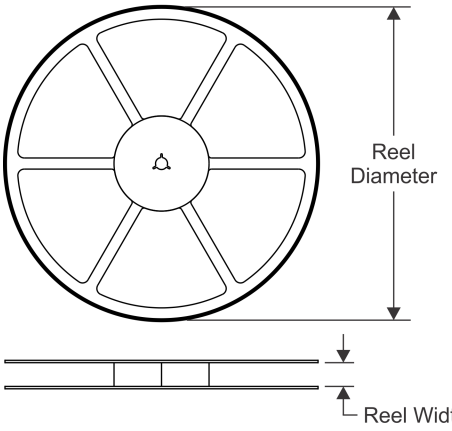

TAPE DIMENSIONS

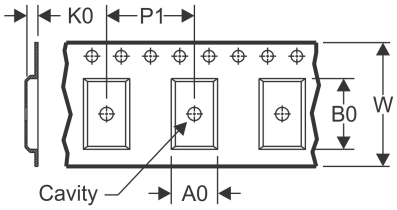

A0	Dimension designed to accommodate the component width
B0	Dimension designed to accommodate the component length
K0	Dimension designed to accommodate the component thickness
W	Overall width of the carrier tape
P1	Pitch between successive cavity centers

QUADRANT ASSIGNMENTS FOR PIN 1 ORIENTATION IN TAPE

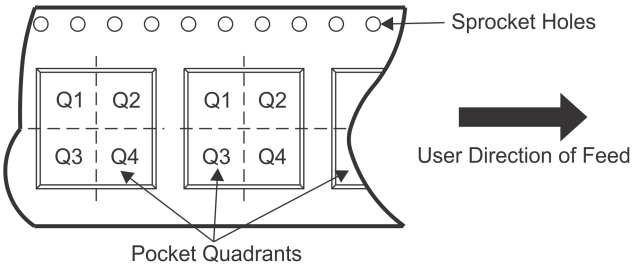

*All dimensions are nominal

Device	Package Type	Package Drawing	Pins	SPQ	Reel Diameter (mm)	Reel Width W1 (mm)	A0 (mm)	B0 (mm)	K0 (mm)	P1 (mm)	W (mm)	Pin1 Quadrant
LMZ31506HRUQR	B1QFN	RUQ	47	500	330.0	24.4	9.35	15.35	3.1	16.0	24.0	Q1
LMZ31506HRUQT	B1QFN	RUQ	47	250	330.0	24.4	9.35	15.35	3.1	16.0	24.0	Q1

TAPE AND REEL BOX DIMENSIONS

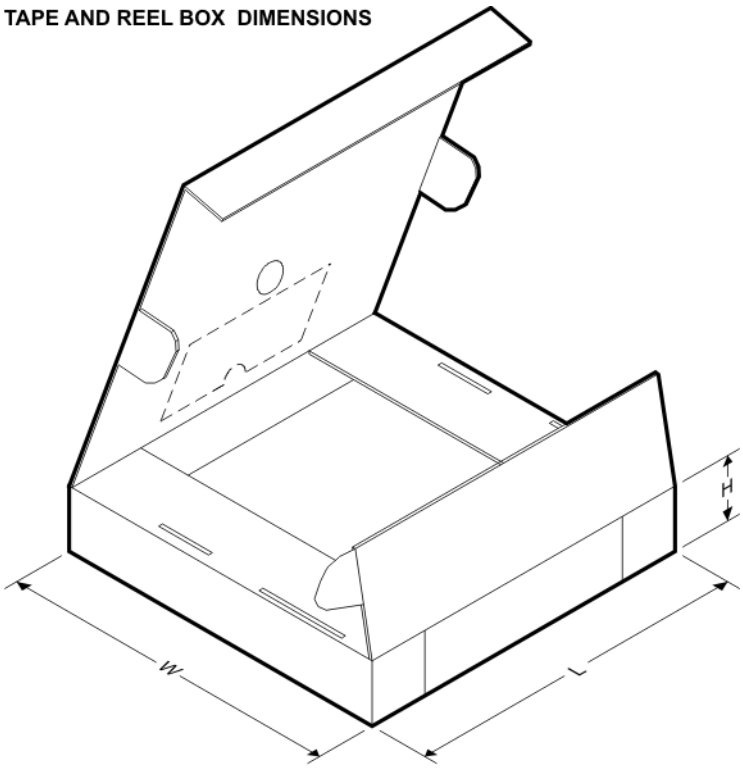

*All dimensions are nominal

Device	Package Type	Package Drawing	Pins	SPQ	Length (mm)	Width (mm)	Height (mm)
LMZ31506HRUQR	B1QFN	RUQ	47	500	383.0	353.0	58.0
LMZ31506HRUQT	B1QFN	RUQ	47	250	383.0	353.0	58.0

PACKAGE OUTLINE

RUQ0047A

B1QFN - 2.95 mm max height

PLASTIC QUAD FLATPACK - NO LEAD

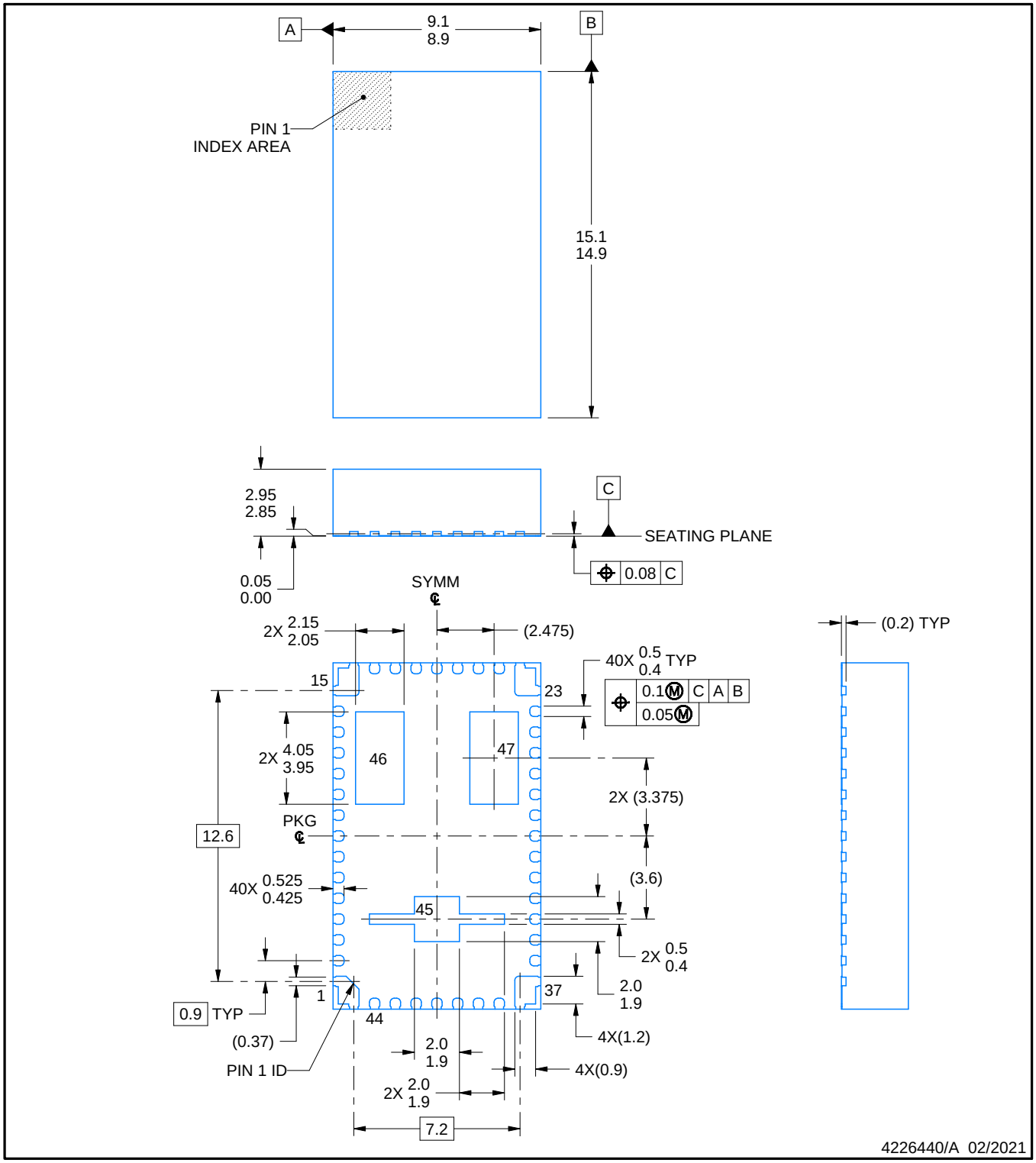

NOTES:

1. All linear dimensions are in millimeters. Any dimensions in parenthesis are for reference only. Dimensioning and tolerancing per ASME Y14.5M.
2. This drawing is subject to change without notice.
3. The package thermal pads must be soldered to the printed circuit board for optimal thermal and mechanical performance.

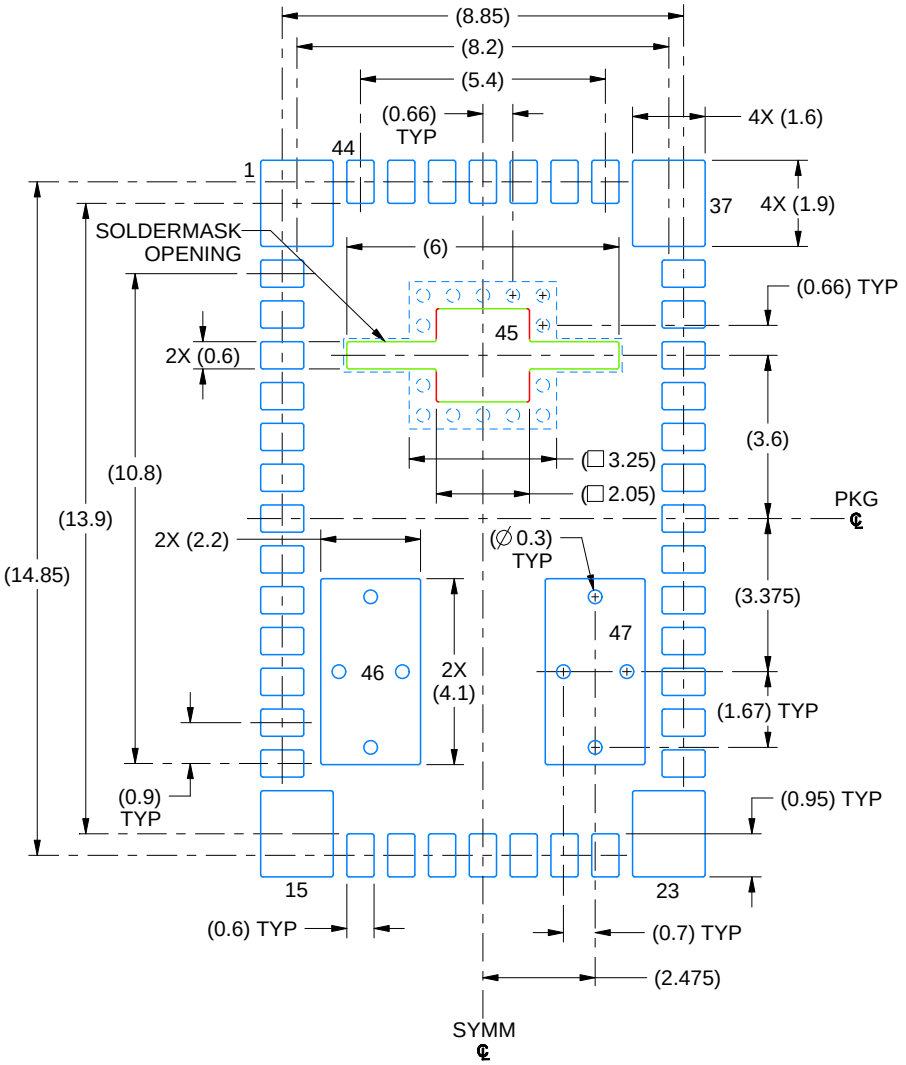

LAND PATTERN EXAMPLE
EXPOSED METAL SHOWN
SCALE:6X

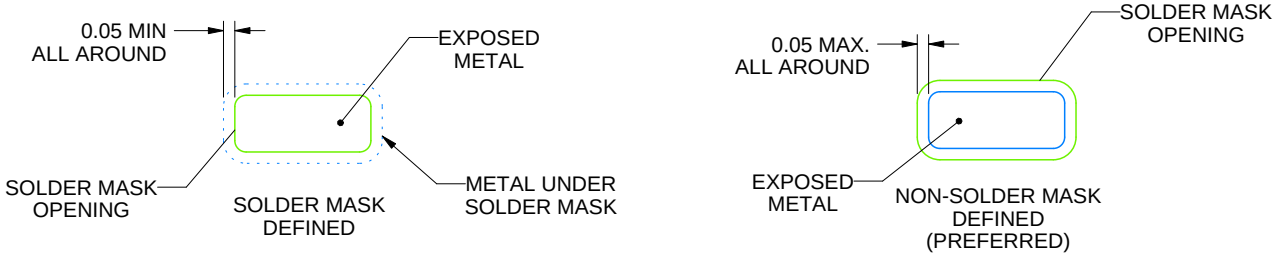

SOLDER MASK DETAIL

4226440/A 02/2021

NOTES: (continued)

4. This package designed to be soldered to a thermal pads on the board. For more information, see Texas Instruments literature number SLUA271 (www.ti.com/lit/slua271).
5. Vias are optional depending on application, refer to device data sheet. If any vias are implemented, refer to their locations shown on this view. It is recommended that vias under paste be filled, plugged or tented.

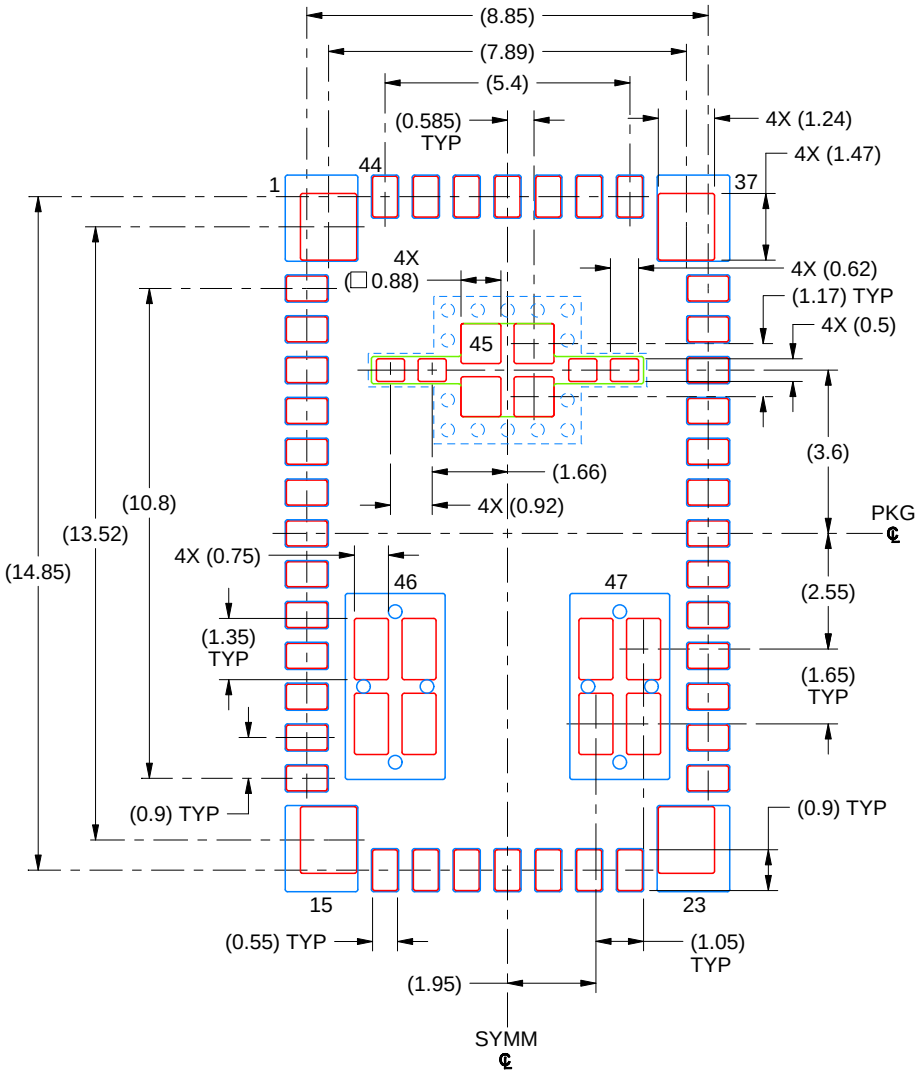

SOLDER PASTE EXAMPLE
BASED ON 0.1 mm STENCIL THICKNESS

CORNER PINS 1, 15, 23 & 37:
60% PRINTED SOLDER COVERAGE BY AREA UNDER PACKAGE

EXPOSED PAD 45:
66% PRINTED SOLDER COVERAGE BY AREA UNDER PACKAGE

EXPOSED PAD 46 & 47:
45% PRINTED SOLDER COVERAGE BY AREA UNDER PACKAGE
SCALE:6X

4226440/A 02/2021

NOTES: (continued)

6. Laser cutting apertures with trapezoidal walls and rounded corners may offer better paste release. IPC-7525 may have alternate design recommendations.

重要なお知らせと免責事項

TI は、技術データと信頼性データ (データシートを含みます)、設計リソース (リファレンス デザインを含みます)、アプリケーションや設計に関する各種アドバイス、Web ツール、安全性情報、その他のリソースを、欠陥が存在する可能性のある「現状のまま」提供しており、商品性および特定目的に対する適合性の黙示保証、第三者の知的財産権の非侵害保証を含むいかなる保証も、明示的または黙示的にかかわらず拒否します。

これらのリソースは、TI 製品を使用する設計の経験を積んだ開発者への提供を意図したものです。(1) お客様のアプリケーションに適した TI 製品の選定、(2) お客様のアプリケーションの設計、検証、試験、(3) お客様のアプリケーションに該当する各種規格や、その他のあらゆる安全性、セキュリティ、規制、または他の要件への確実な適合に関する責任を、お客様のみが単独で負うものとします。

上記の各種リソースは、予告なく変更される可能性があります。これらのリソースは、リソースで説明されている TI 製品を使用するアプリケーションの開発の目的でのみ、TI はその使用をお客様に許諾します。これらのリソースに関して、他の目的で複製することや掲載することは禁止されています。TI や第三者の知的財産権のライセンスが付与されている訳ではありません。お客様は、これらのリソースを自身で使用した結果発生するあらゆる申し立て、損害、費用、損失、責任について、TI およびその代理人を完全に補償するものとし、TI は一切の責任を拒否します。

TI の製品は、 TI の販売条件 、 TI の総合的な品質ガイドライン 、 ti.com または TI 製品などに関連して提供される他の適用条件に従い提供されます。TI がこれらのリソースを提供することは、適用される TI の保証または他の保証の放棄の拡大や変更を意味するものではありません。 TI がカスタム、またはカスタマー仕様として明示的に指定していない限り、TI の製品は標準的なカタログに掲載される汎用機器です。

お客様がいかなる追加条項または代替条項を提案する場合も、TI はそれらに異議を唱え、拒否します。

Copyright © 2026, Texas Instruments Incorporated

最終更新日：2025 年 10 月