AMC0381D Precision, High-Voltage DC Input, Reinforced Isolated Amplifier With Fixed-Gain Differential Output

1 Features

- Integrated, high-voltage resistive divider for direct DC voltage sensing without external resistors
- Differential output
- Supply voltage range:
  - High-side (VDD1): 3.0V to 5.5V
  - Low-side (VDD2): 3.0V to 5.5V
- Low DC errors:
  - Offset error: ±0.8mV (maximum)
  - Offset drift: ±10µV/°C (maximum)
  - Attenuation error: ±0.25% (maximum)
  - Attenuation drift: ±40ppm/°C (maximum)
  - Nonlinearity: 0.025% (maximum)
- High CMTI: 150V/ns (minimum)
- Low EMI: Meets CISPR-11 and CISPR-25 limits
- Available input options:
  - AMC0381D06: 600V, 10MΩ
  - AMC0381D10: 1000V, 12.5MΩ
  - AMC0381D16: 1600V, 33.5MΩ
- Safety-related certifications:
  - 7000V_{PK} reinforced isolation per DIN EN IEC 60747-17 (VDE 0884-17)
  - 5000V_{RMS} isolation for 1 minute per UL 1577
- Fully specified over the extended industrial temperature range: –40°C to +125°C

2 Applications

- Server power-supply units (PSU)
- Energy storage systems (ESS)
- Solar inverters
- EV charging stations

3 Description

The AMC0381D is a precision, galvanically isolated amplifier with a high-voltage DC, high impedance input, and fixed-gain differential output. The input is designed to connect directly to a high-voltage signal source.

The isolation barrier separates parts of the system that operate on different common-mode voltage levels. The isolation barrier is highly resistant to magnetic interference and is certified to provide reinforced isolation up to 5kV_{RMS} (60s).

The AMC0381D outputs a differential signal proportional to the input voltage. The differential output is insensitive to ground shifts and enables routing the output signal over long distances.

With an integrated precision resistive divider, the AMC0381D achieves better than 1% accuracy over the full temperature range, including lifetime drift.

The AMC0381D is available in a 15-pin, 0.65mm pitch and a smaller, 20-pin, 0.5mm pitch SSOP package. The device is fully specified over the temperature range from –40°C to +125°C.

Package Information

PART NUMBER	PACKAGE(1)	PACKAGE SIZE(2)
AMC0381D	DFX (SSOP, 15)	12.8mm × 10.3mm
	DFJ (SSOP, 20)	7.6mm × 10.3mm

(1) For more information, see the *Mechanical, Packaging, and Orderable Information*.
(2) The package size (length × width) is a nominal value and includes pins, where applicable.

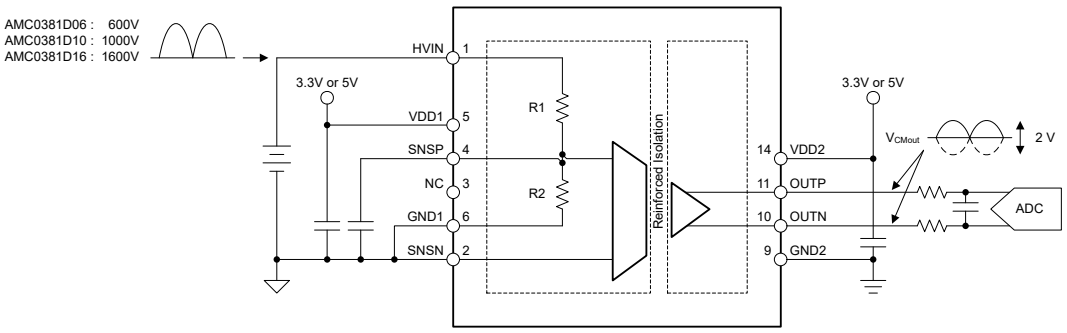

Typical Application (DFX Package)

An IMPORTANT NOTICE at the end of this data sheet addresses availability, warranty, changes, use in safety-critical applications, intellectual property matters and other important disclaimers. UNLESS OTHERWISE NOTED, this document contains PRODUCTION DATA.

Table of Contents

1 Features....1
2 Applications....1
3 Description....1
4 Device Comparison Table....3
5 Pin Configuration and Functions....4
6 Specifications....6
6.1 Absolute Maximum Ratings....6
6.2 ESD Ratings....6
6.3 Recommended Operating Conditions....6
6.4 Thermal Information....7
6.5 Power Ratings....7
6.6 Insulation Specifications....8
6.7 Safety-Related Certifications....10
6.8 Safety Limiting Values....10
6.9 Electrical Characteristics....11
6.10 Switching Characteristics....12
6.11 Timing Diagram....12
6.12 Insulation Characteristics Curves....13
6.13 Typical Characteristics....14
7 Detailed Description....18
7.1 Overview....18
7.2 Functional Block Diagram....18
7.3 Feature Description....18
7.4 Device Functional Modes....21
8 Application and Implementation....22
8.1 Application Information....22
8.2 Typical Application....22
8.3 Best Design Practices....24
8.4 Power Supply Recommendations....25
8.5 Layout....26
9 Device and Documentation Support....27
9.1 Documentation Support....27
9.2 Receiving Notification of Documentation Updates....27
9.3 Support Resources....27
9.4 Trademarks....27
9.5 Electrostatic Discharge Caution....27
9.6 Glossary....27
10 Revision History....27
11 Mechanical, Packaging, and Orderable Information....28

Copyright © 2026 Texas Instruments Incorporated

4 Device Comparison Table

Table 4-1. Device Comparison

DEVICE	R1[(1)]	R2[(1)]	DIVIDER RATIO	LINEAR INPUT RANGE	CLIPPING VOLTAGE	ABS MAX INPUT VOLTAGE
AMC0381D06	10MΩ	16.7kΩ	601:1	600V	769V	900V
AMC0381D10	12.5MΩ	12.5kΩ	1001:1	1000V	1281V	1500V
AMC0381D16	33.5MΩ	21kΩ	1601:1	1600V	2049V	2000V

(1) R1 and R2 are approximated resistor values and do not accurately reflect the divider ratio.

Copyright © 2026 Texas Instruments Incorporated

5 Pin Configuration and Functions

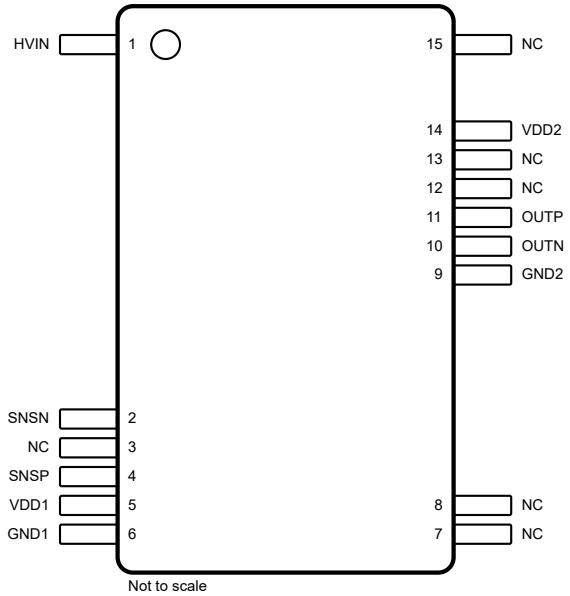

Figure 5-1. DFX Package, 15-Pin SOIC (Top View)

Table 5-1. Pin Functions

PIN		TYPE	DESCRIPTION
NO.	NAME		
1	HVIN	Analog input	High-voltage input
2	SNSN	Analog input	Ground sense pin and inverting analog input to the amplifier. Connect to GND1.
3, 7, 8, 12, 13, 15	NC	N/A	No internal connection. The pin can be connected to any potential or left floating.
4	SNSP	Analog input	Sense voltage pin and noninverting analog input to the amplifier. Connect to an external filter capacitor or leave floating.
5	VDD1	High-side power	Analog (high-side) power supply[(1)]
6	GND1	High-side ground	High-side ground
9	GND2	Low-side ground	Low-side ground
10	OUTN	Analog output	Inverting analog output
11	OUTP	Analog output	Noninverting analog output
14	VDD2	Low-side power	Low-side power supply[(1)]

(1) See the *Power Supply Recommendations* section for power-supply decoupling recommendations.

Copyright © 2026 Texas Instruments Incorporated

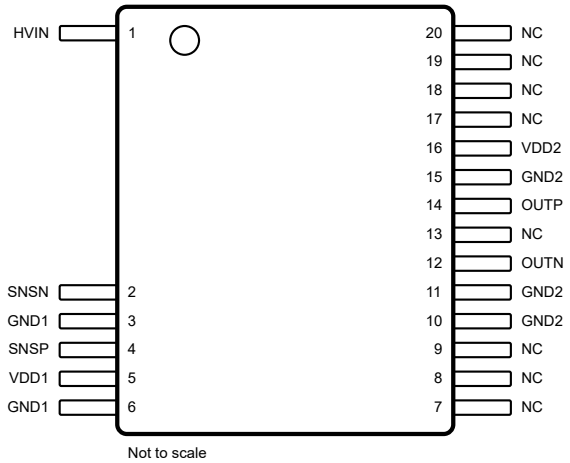

Figure 5-2. DFJ Package, 20-Pin SOIC (Top View)

Table 5-2. Pin Functions

PIN		TYPE	DESCRIPTION
NO.	NAME		
1	HVIN	Analog input	High-voltage input
2	SNSN	Analog input	Ground sense pin and inverting analog input to the amplifier. Connect to GND1.
3, 6	GND1	High-side ground	High-side ground
4	SNSP	Analog input	Sense voltage pin and noninverting analog input to the amplifier. Connect to an external filter capacitor or leave floating.
5	VDD1	High-side power	Analog (high-side) power supply(1)
7, 8, 9, 13, 17, 18, 19, 20	NC	N/A	No internal connection. Connect to any other pin on the same side of the package or leave floating.
10, 11, 15	GND2	Low-side ground	Low-side ground
12	OUTN	Analog output	Inverting analog output
14	OUTP	Analog output	Noninverting analog output
16	VDD2	Low-side power	Low-side power supply(1)

(1) See the *Power Supply Recommendations* section for power-supply decoupling recommendations.

6 Specifications

6.1 Absolute Maximum Ratings

see[1]

		MIN	MAX	UNIT
Power-supply voltage	High-side, VDD1 to GND1	–0.3	6.5	V
	Low-side, VDD2 to GND2	–0.3	6.5	
Analog input voltage	HVIN to GND1, AMC0381D06	–150	900	V
	HVIN to GND1, AMC0381D10	–150	1500	
	HVIN to GND1, AMC0381D16	–150	2000	
	SNSP, SNSN	GND1 – 0.5	VDD1 + 0.5	
Analog output voltage	OUTP, OUTN	GND2 – 0.5	VDD2 + 0.5	V
Input current	Continuous, any pin except power-supply and HVIN pins	–10	10	mA
Temperature	Junction, T_J		150	°C
	Storage, T_{stg}	–65	150	

(1) Operation outside the *Absolute Maximum Ratings* may cause permanent device damage. *Absolute Maximum Ratings* do not imply functional operation of the device at these or any other conditions beyond those listed under *Recommended Operating Conditions*. If used outside the Recommended Operating Conditions but within the Absolute Maximum Ratings, the device may not be fully functional, and this may affect device reliability, functionality, performance, and shorten the device lifetime

6.2 ESD Ratings

			VALUE	UNIT
$V_{(ESD)}$	Electrostatic discharge	Human-body model (HBM), per ANSI/ESDA/JEDEC JS-001[1]	±2000	V
		Charged-device model (CDM), per ANSI/ESDA/JEDEC JS-002[2]	±1000	

(1) JEDEC document JEP155 states that 500V HBM allows safe manufacturing with a standard ESD control process.
(2) JEDEC document JEP157 states that 250V CDM allows safe manufacturing with a standard ESD control process.

6.3 Recommended Operating Conditions

over operating ambient temperature range (unless otherwise noted)

			MIN	NOM	MAX	UNIT
POWER SUPPLY						
VDD1	High-side power supply	VDD1 to GND1	3	5.0	5.5	V
VDD2	Low-side power supply	VDD2 to GND2	3	3.3	5.5	V
ANALOG INPUT						
$V_{Clipping}$	Nominal input voltage before clipping output	Referred to SNSP	–0.1		1.28	V
		Referred to HVIN, AMC0381D06	–60		769	
		Referred to HVIN, AMC0381D10	–100		1281	
		Referred to HVIN, AMC0381D16	–160		2049	
V_{FSR}	Specified linear input voltage	Referred to SNSP	–0.05		1	V
		Referred to HVIN, AMC0381D06	–30		600	
		Referred to HVIN, AMC0381D10	–50		1000	
		Referred to HVIN, AMC0381D16	–80		1600	
ANALOG OUTPUT						
C_{LOAD}	Capacitive load	OUTP or OUTN to GND2[1]			500	pF
		OUTP to OUTN[2]			250	
R_{LOAD}	Resistive load	OUTP or OUTN to GND2		10	1	kΩ
TEMPERATURE RANGE						

Copyright © 2026 Texas Instruments Incorporated

over operating ambient temperature range (unless otherwise noted)

		MIN	NOM	MAX	UNIT
T_A	Specified ambient temperature	–40		125	°C

(1) Not in addition to differential capacitive load from OUTP to OUTN.
(2) Not in addition to single-ended capacitive load from OUTP/OUTN to GND2

6.4 Thermal Information

THERMAL METRIC[1]		DFX (SSOP) 15 PINS	UNIT
$R_{\theta JA}$	Junction-to-ambient thermal resistance	86.9	°C/W
$R_{\theta JC(top)}$	Junction-to-case (top) thermal resistance	36.7	°C/W
$R_{\theta JB}$	Junction-to-board thermal resistance	43.5	°C/W
Ψ_{JT}	Junction-to-top characterization parameter	17	°C/W
Ψ_{JB}	Junction-to-board characterization parameter	41.8	°C/W
$R_{\theta JC(bot)}$	Junction-to-case (bottom) thermal resistance	N/A	°C/W

(1) For more information about traditional and new thermal metrics, see the Semiconductor and IC Package Thermal Metrics application note.

6.5 Power Ratings

PARAMETER		TEST CONDITIONS	VALUE	UNIT
P_D	Maximum power dissipation (both sides)	AVDD = DVDD = 5.5V, V_{HVIN} = $V_{Clipping}$ AMC0381D06	140	mW
		AVDD = DVDD = 5.5V, V_{HVIN} = $V_{Clipping}$ AMC0381D10	210	
		AVDD = DVDD = 5.5V, V_{HVIN} = $V_{Clipping}$ AMC0381D16	200	
P_{D1}	Maximum power dissipation (high-side)	AVDD = 5.5V, V_{HVIN} = $V_{Clipping}$ AMC0381D06	90	mW
		AVDD = 5.5V, V_{HVIN} = $V_{Clipping}$ AMC0381D10	160	
		AVDD = 5.5V, V_{HVIN} = $V_{Clipping}$ AMC0381D16	150	
P_{D2}	Maximum power dissipation (low-side)	DVDD = 5.5V	50	mW

Copyright © 2026 Texas Instruments Incorporated

6.6 Insulation Specifications

over operating ambient temperature range (unless otherwise noted)

PARAMETER		TEST CONDITIONS	VALUE	UNIT
DFX PACKAGE				
CLR	External clearance[1]	Shortest pin-to-pin distance across the package through air	≥ 8	mm
CPG	External creepage[1]	Shortest pin-to-pin distance across the package along the package surface	≥ 9.7	mm
		Shortest distance between pin 1 and pin 2 along the package surface	≥ 8	mm
DFJ PACKAGE				
CLR	External clearance[1]	Shortest pin-to-pin distance across the package through air	≥ 8	mm
CPG	External creepage[1]	Shortest pin-to-pin distance across the package along the package surface	≥ 8	mm
		Shortest distance between pin 1 and pin 2 along the package surface	≥ 4.2	mm
GENERAL				
DTI	Distance through insulation	Minimum internal gap (internal clearance) of the double insulation	≥ 15.4	µm
CTI	Comparative tracking index	DIN EN 60112 (VDE 0303-11); IEC 60112	≥ 600	V
	Material group	According to IEC 60664-1	I	
	Overvoltage category per IEC 60664-1	Rated mains voltage ≤ 600V_{RMS}	I-III	
		Rated mains voltage ≤ 1000V_{RMS}	I-II	
DIN EN IEC 60747-17 (VDE 0884-17)[2]				
V_{IORM}	Maximum repetitive peak isolation voltage	At AC voltage	2120	V_{PK}
V_{IOWM}	Maximum-rated isolation working voltage	At AC voltage (sine wave)	1500	V_{RMS}
		At DC voltage	2120	V_{DC}
V_{IOTM}	Maximum transient isolation voltage	$V_{TEST} = V_{IOTM}$, t = 60s (qualification test), $V_{TEST} = 1.2 \times V_{IOTM}$, t = 1s (100% production test)	7000	V_{PK}
V_{IMP}	Maximum impulse voltage[3]	Tested in air, 1.2/50µs waveform per IEC 62368-1	7700	V_{PK}
V_{IOSM}	Maximum surge isolation voltage[4]	Tested in oil (qualification test), 1.2/50µs waveform per IEC 62368-1	10000	V_{PK}
q_{pd}	Apparent charge[5]	Method a, after input/output safety test subgroups 2 and 3, $V_{pd(ini)} = V_{IOTM}$, t_{ini} = 60s, $V_{pd(m)} = 1.2 \times V_{IORM}$, t_m = 10s	≤ 5	pC
		Method a, after environmental tests subgroup 1, $V_{pd(ini)} = V_{IOTM}$, t_{ini} = 60s, $V_{pd(m)} = 1.6 \times V_{IORM}$, t_m = 10s	≤ 5	
		Method b1, at preconditioning (type test) and routine test, $V_{pd(ini)} = 1.2x\ V_{IOTM}$, t_{ini} = 1s, $V_{pd(m)} = 1.875 \times V_{IORM}$, t_m = 1s	≤ 5	
		Method b2, at routine test (100% production)[7] $V_{pd(ini)} = V_{pd(m)} = 1.2 \times V_{IOTM}$, $t_{ini} = t_m$ = 1s	≤ 5	
C_{IO}	Barrier capacitance, input to output[6]	$V_{IO} = 0.5V_{PP}$ at 1MHz	≅1.5	pF
R_{IO}	Insulation resistance, input to output[6]	V_{IO} = 500V at T_A = 25°C	> 10^{12}	Ω
		V_{IO} = 500V at 100°C ≤ T_A ≤ 125°C	> 10^{11}	
		V_{IO} = 500V at T_S = 150°C	> 10^{9}	
	Pollution degree		2	
	Climatic category		55/125/21	
UL1577				

Copyright © 2026 Texas Instruments Incorporated

over operating ambient temperature range (unless otherwise noted)

PARAMETER		TEST CONDITIONS	VALUE	UNIT
V_{ISO}	Withstand isolation voltage	$V_{TEST} = V_{ISO}$, t = 60s (qualification test), $V_{TEST} = 1.2 \times V_{ISO}$, t = 1s (100% production test)	5000	V_{RMS}

(1) Apply creepage and clearance requirements according to the specific equipment isolation standards of an application. Care must be taken to maintain the creepage and clearance distance of a board design to ensure that the mounting pads of the isolator on the printed circuit board (PCB) do not reduce this distance. Creepage and clearance on a PCB become equal in certain cases. Techniques such as inserting grooves, ribs, or both on a PCB are used to help increase these specifications.
(2) This coupler is suitable for *safe electrical insulation* only within the safety ratings. Compliance with the safety ratings shall be ensured by means of suitable protective circuits.
(3) Testing is carried out in air to determine the surge immunity of the package.
(4) Testing is carried in oil to determine the intrinsic surge immunity of the isolation barrier.
(5) Apparent charge is electrical discharge caused by a partial discharge (pd).
(6) All pins on each side of the barrier are tied together, creating a two-pin device.
(7) Either method b1 or b2 is used in production.

Copyright © 2026 Texas Instruments Incorporated

6.7 Safety-Related Certifications

VDE	UL
DIN EN IEC 60747-17 (VDE 0884-17), EN IEC 60747-17, DIN EN IEC 62368-1 (VDE 0868-1), EN IEC 62368-1, IEC 62368-1 Clause : 5.4.3 ; 5.4.4.4 ; 5.4.9	Recognized under 1577 component recognition and CSA component acceptance NO 5 programs
Reinforced insulation	Single protection
Certificate number: Pending	File number: Pending

6.8 Safety Limiting Values

Safety limiting[(1)] intends to minimize potential damage to the isolation barrier upon failure of input or output circuitry. A failure of the I/O can allow low resistance to ground or the supply and, without current limiting, dissipate sufficient power to over-heat the die and damage the isolation barrier potentially leading to secondary system failures.

PARAMETER		TEST CONDITIONS	MIN	TYP	MAX	UNIT
I_{SI}	Safety input current	$R_{\theta JA}$ = 86.9°C/W, VDDx = 5.5V, T_J = 150°C, T_A = 25°C, AMC0381D06			250	mA
		$R_{\theta JA}$ = 86.9°C/W, VDDx = 5.5V, T_J = 150°C, T_A = 25°C, AMC0381D10			240	
		$R_{\theta JA}$ = 86.9°C/W, VDDx = 5.5V, T_J = 150°C, T_A = 25°C, AMC0381D16			240	
I_{SO}	Safety output current	$R_{\theta JA}$ = 86.9°C/W, VDDx = 5.5V, T_J = 150°C, T_A = 25°C			260	mA
P_S	Safety input, output, or total power	$R_{\theta JA}$ = 86.9°C/W, T_J = 150°C, T_A = 25°C			1440	mW
T_S	Maximum safety temperature				150	°C

(1) The maximum safety temperature, T_S, has the same value as the maximum junction temperature, T_J, specified for the device. The I_S and P_S parameters represent the safety current and safety power, respectively. Do not exceed the maximum limits of I_S and P_S. These limits vary with the ambient temperature, T_A.
The junction-to-air thermal resistance, $R_{\theta JA}$, in the Thermal Information table is that of a device installed on a high-K test board for leaded surface-mount packages. Use these equations to calculate the value for each parameter:
$T_J = T_A + R_{\theta JA} \times P$, where P is the power dissipated in the device.
$T_{J(max)} = T_S = T_A + R_{\theta JA} \times P_S$, where $T_{J(max)}$ is the maximum junction temperature.
$P_S = I_S \times VDD_{max}$, where VDD_{max} is the maximum supply voltage for high-side and low-side.

Copyright © 2026 Texas Instruments Incorporated

6.9 Electrical Characteristics

minimum and maximum specifications apply from T_A = –40°C to +125°C, VDD1 = 3.0V to 5.5V, VDD2 = 3.0V to 5.5V, V_{SNSP} = 0V to +1V, and V_{SNSN} = 0V; typical specifications are at T_A = 25°C, VDD1 = 5V, VDD2 = 3.3V (unless otherwise noted)

PARAMETER		TEST CONDITIONS	MIN	TYP	MAX	UNIT
ANALOG INPUT						
R_{IN}	Input resistance	AMC0381D06	8.5	10	11.5	MΩ
		AMC0381D10	10.6	12.5	14.4	
		AMC0381D16	28	33.5	39	
	Resistive divider ratio	V_{HVIN} / V_{SNSP}, AMC0381D06	598	601	604	V/V
		V_{HVIN} / V_{SNSP}, AMC0381D10	996	1001	1006	
		V_{HVIN} / V_{SNSP}, AMC0381D16	1596	1601	1606	
CMTI	Common-mode transient immunity	SNSP = GND1	150			V/ns
ANALOG OUTPUT						
	Nominal attenuation	(V_{OUTP} – V_{OUTN}) / V_{HVIN}, AMC0381D06		3.328		mV/V
		(V_{OUTP} – V_{OUTN}) / V_{HVIN}, AMC0381D10		1.998		
		(V_{OUTP} – V_{OUTN}) / V_{HVIN}, AMC0381D16		1.249		
V_{CMout}	Output common-mode voltage		1.39	1.44	1.50	V
$V_{CLIPout}$	Clipping differential output voltage	V_{OUT} = (V_{OUTP} – V_{OUTN}); V_{IN} > $V_{Clipping}$	–2.52	±2.49	2.52	V
$V_{FAILSAFE}$	Failsafe differential output voltage	VDD1 undervoltage, or VDD1 missing	–2.63	–2.57	–2.53	V
R_{OUT}	Output resistance	OUTP or OUTN		<0.2		Ω
	Output short-circuit current	On OUTP or OUTN, sourcing or sinking, HVIN = GND1, outputs shorted to either GND or VDD2		11		mA
DC ACCURACY						
V_{OS}	Input offset voltage	Referred to SNSP, T_A = 25°C, HVIN = GND1	–0.8	±0.1	0.8	mV
		Referred to HVIN, HVIN = GND1, T_A = 25°C, AMC0381D06	–480	±60	480	
		Referred to HVIN, HVIN = GND1, T_A = 25°C, AMC0381D10	–800	±100	800	
		Referred to HVIN, HVIN = GND1, T_A = 25°C, AMC0381D16	–1280	±160	1280	
TCV_{OS}	Input offset thermal drift[3]	Referred to SNSP, HVIN = GND1	–0.01	±0.003	0.01	mV/°C
		Referred to HVIN, HVIN = GND1, AMC0381D06	–6	±1.8	6	
		Referred to HVIN, HVIN = GND1, AMC0381D10	–10	±3	10	
		Referred to HVIN, HVIN = GND1, AMC0381D16	–16	±4.8	16	
E_A	Attenuation error[1]	T_A = 25°C	–0.25%	±0.05%	0.25%	
TCE_A	Attenuation error temperature drift[4]		–40	±20	40	ppm/°C
	Nonlinearity[2]		–0.025%	±0.01%	0.025%	
	Output noise	V_{IN} = GND1, BW = 50kHz		200		µVrms
PSRR	Power-supply rejection ratio[5]	VDD1 DC PSRR, HVIN = GND1, VDD1 from 3V to 5.5V		–77		dB
		VDD1 AC PSRR, HVIN = GND1, VDD1 with 10kHz / 100mV ripple		–49		
		VDD2 DC PSRR, HVIN = GND1, VDD2 from 3V to 5.5V		–100		
		VDD2 AC PSRR, HVIN = GND1, VDD2 with 10kHz / 100mV ripple		–75		
AC ACCURACY						
BW	Output bandwidth		120	145		kHz
THD	Total harmonic distortion	V_{SNSP} = 1V_{PP}, SNSN = GND1, f_{IN} = 10kHz		–80	–73	dB
SNR	Signal-to-noise ratio	V_{SNSP} = 1V_{PP}, SNSN = GND1, f_{IN} = 1kHz, BW = 10kHz	75	79		dB

Copyright © 2026 Texas Instruments Incorporated

6.9 Electrical Characteristics (continued)

minimum and maximum specifications apply from T_A = –40°C to +125°C, VDD1 = 3.0V to 5.5V, VDD2 = 3.0V to 5.5V, V_{SNSP} = 0V to +1V, and V_{SNSN} = 0V; typical specifications are at T_A = 25°C, VDD1 = 5V, VDD2 = 3.3V (unless otherwise noted)

PARAMETER		TEST CONDITIONS	MIN	TYP	MAX	UNIT
SNR	Signal-to-noise ratio	V_{SNSP} = 1V_{PP}, SNSN = GND1, f_{IN} = 10kHz, BW = 50kHz		70		dB
POWER SUPPLY						
I_{DD1}	High-side supply current			4.3	5.6	mA
I_{DD2}	Low-side supply current			6.2	9.7	mA
$VDD1_{UV}$	High-side undervoltage detection threshold	VDD1 rising	2.5	2.6	2.7	V
		VDD1 falling	1.9	2.0	2.1	
$VDD2_{UV}$	Low-side undervoltage detection threshold	VDD2 rising	2.3	2.5	2.7	V
		VDD2 falling	1.9	2.05	2.2	

(1) The typical value includes one sigma statistical variation.
(2) Integral nonlinearity is defined as the maximum deviation from a straight line passing through the end-points of the ideal ADC transfer function expressed as number of LSBs or as a percent of the specified linear full-scale range FSR.
(3) Offset error drift is calculated using the box method, as described by the following equation:
TCE_O = ($value_{MAX}$ - $value_{MIN}$) / TempRange
(4) Attenuation error drift is calculated using the box method, as described by the following equation:
TCE_A (ppm) = (($value_{MAX}$ - $value_{MIN}$) / (value x TempRange)) X 10^6
(5) This parameter is referred to SNSP.

6.10 Switching Characteristics

over operating ambient temperature range (unless otherwise noted)

PARAMETER		TEST CONDITIONS	MIN	TYP	MAX	UNIT
t_r	Output signal rise time			2.6		µs
t_f	Output signal fall time			2.6		µs
	V_{SNSP} to V_{OUTx} signal delay (50% – 10%)	Unfiltered output		1.6		µs
	V_{SNSP} to V_{OUTx} signal delay (50% – 50%)	Unfiltered output		3.0	3.2	µs
	V_{SNSP} to V_{OUTx} signal delay (50% – 90%)	Unfiltered output		4.2		µs
t_{AS}	Analog settling time	VDD1 step to 3.0V with VDD2 ≥ 3.0V, to V_{OUTP}, V_{OUTN} valid, 0.1% settling		20	100	µs

6.11 Timing Diagram

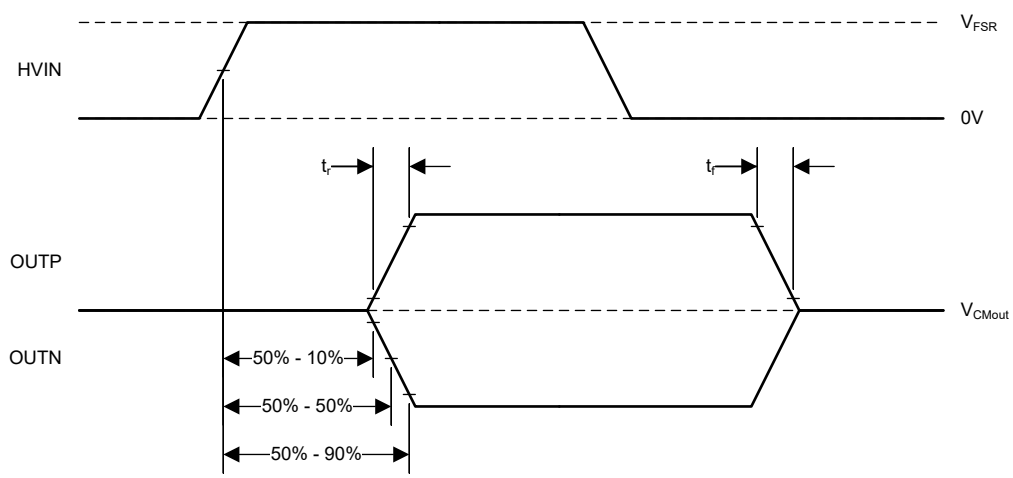

Figure 6-1. Rise, Fall, and Delay Time Definitions

Copyright © 2026 Texas Instruments Incorporated

6.12 Insulation Characteristics Curves

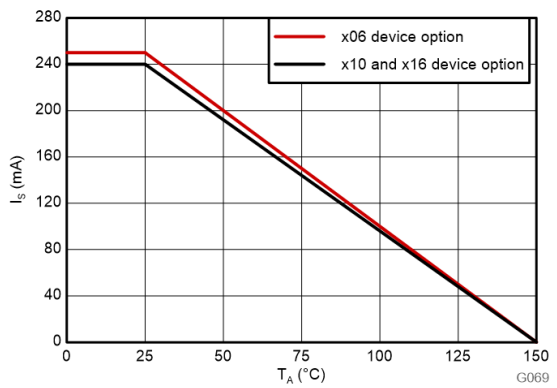

Figure 6-2. Thermal Derating Curve for Safety-Limiting Current per VDE

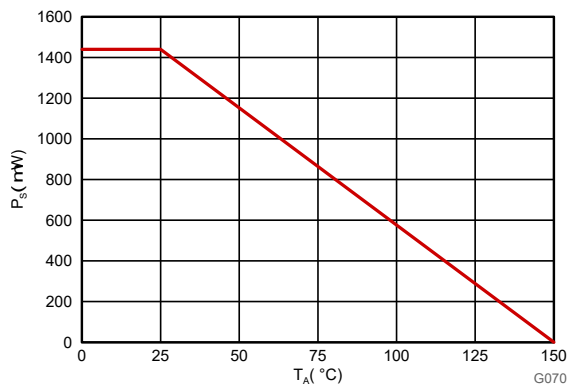

Figure 6-3. Thermal Derating Curve for Safety-Limiting Power per VDE

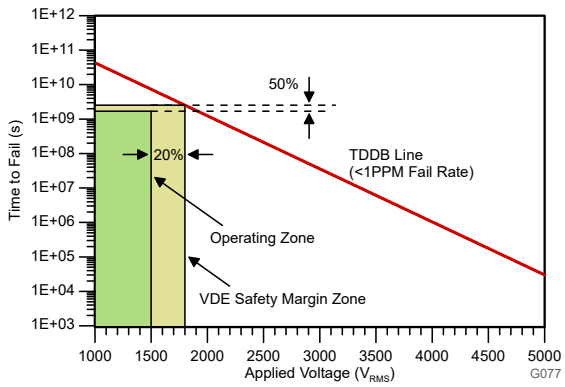

T_A up to 150°C, stress-voltage frequency = 60Hz, isolation working voltage = 1500V_{RMS}, projected operating lifetime ≥50 years

Figure 6-4. Reinforced Isolation Capacitor Lifetime Projection

6.13 Typical Characteristics

at VDD1 = 5V, VDD2 = 3.3V, SNSN = GND1, and f_{IN} = 10kHz (unless otherwise noted)

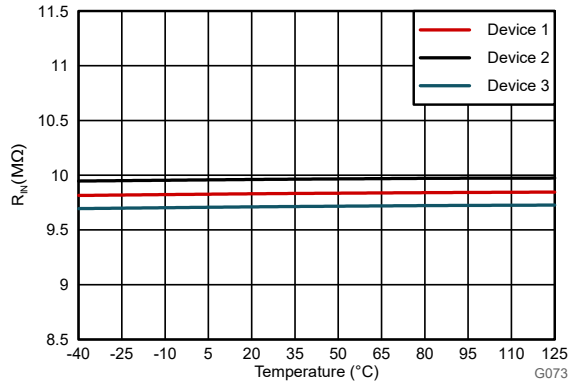

AMC0381D06

Figure 6-5. Input Resistance vs Temperature

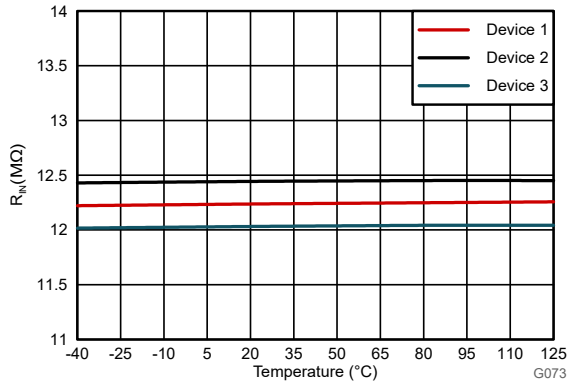

AMC0381D10

Figure 6-6. Input Resistance vs Temperature

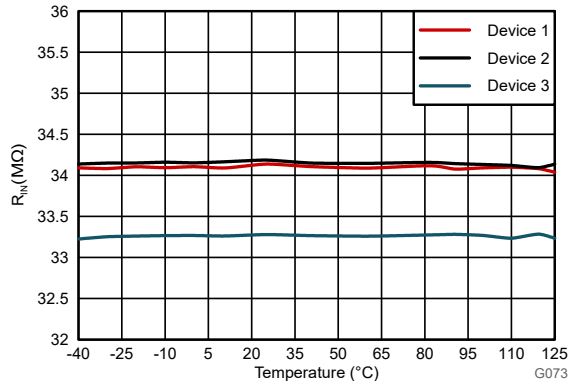

AMC0381D16

Figure 6-7. Input Resistance vs Temperature

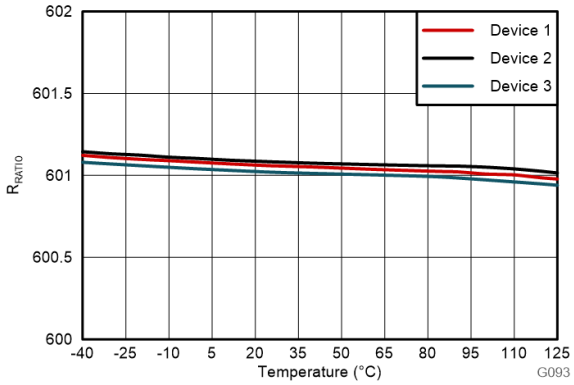

AMC0381D06

Figure 6-8. Divider Ratio vs Temperature

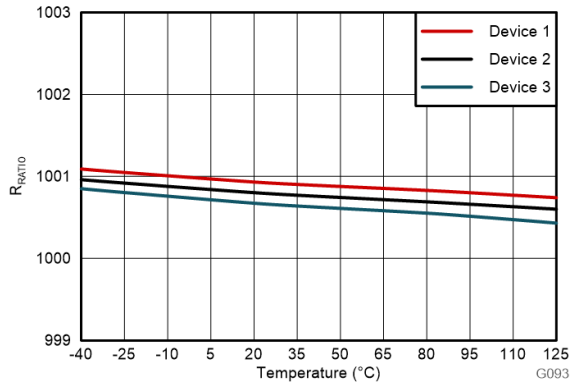

AMC0381D10

Figure 6-9. Divider Ratio vs Temperature

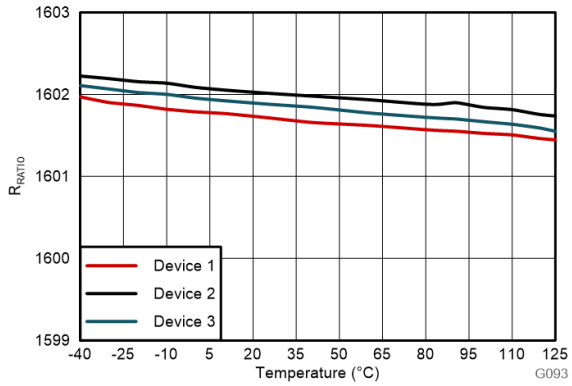

AMC0381D16

Figure 6-10. Divider Ratio vs Temperature

Copyright © 2026 Texas Instruments Incorporated

6.13 Typical Characteristics (continued)

at VDD1 = 5V, VDD2 = 3.3V, SNSN = GND1, and f_{IN} = 10kHz (unless otherwise noted)

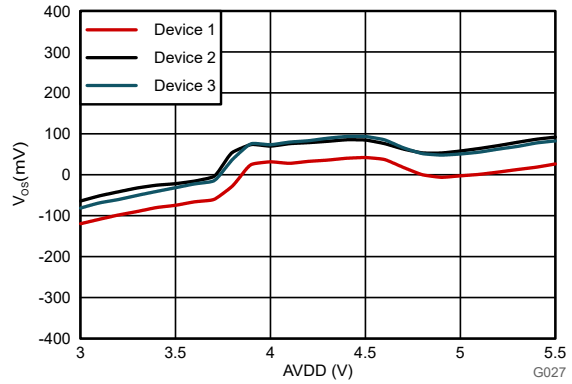

AMC0381D06

Figure 6-11. Input Offset Voltage vs High-Side Supply Voltage

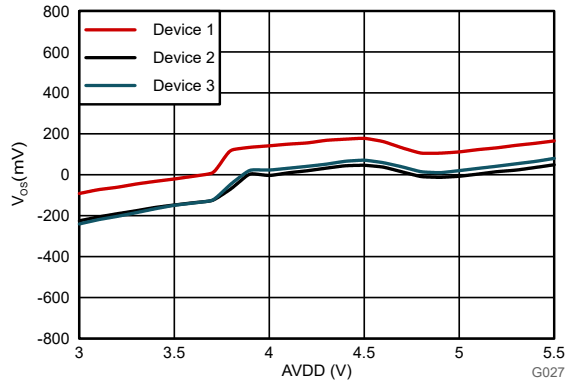

AMC0381D10

Figure 6-12. Input Offset Voltage vs High-Side Supply Voltage

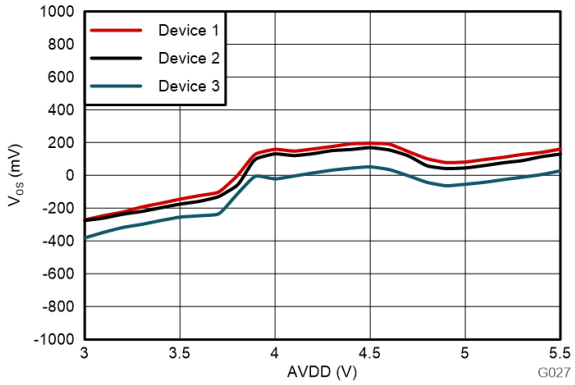

AMC0381D16

Figure 6-13. Input Offset Voltage vs High-Side Supply Voltage

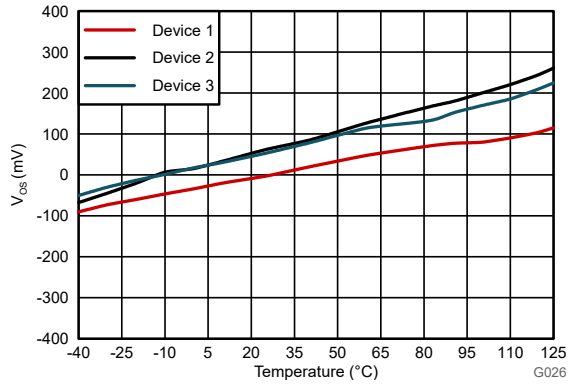

AMC0381D06

Figure 6-14. Input Offset Voltage vs Temperature

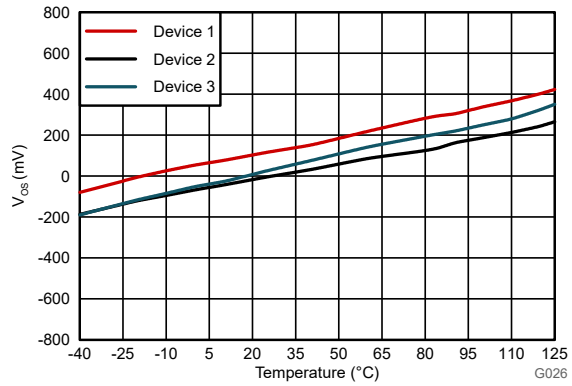

AMC0381D10

Figure 6-15. Input Offset Voltage vs Temperature

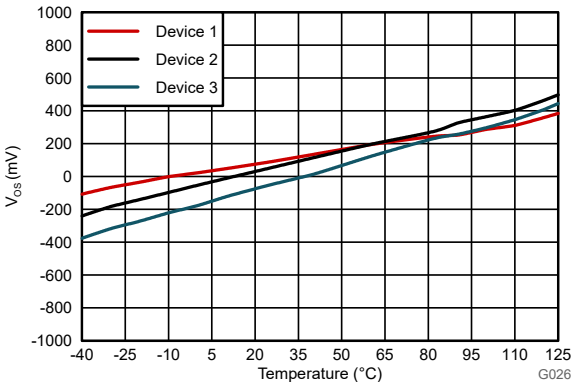

AMC0381D16

Figure 6-16. Input Offset Voltage vs Temperature

6.13 Typical Characteristics (continued)

at VDD1 = 5V, VDD2 = 3.3V, SNSN = GND1, and f_{IN} = 10kHz (unless otherwise noted)

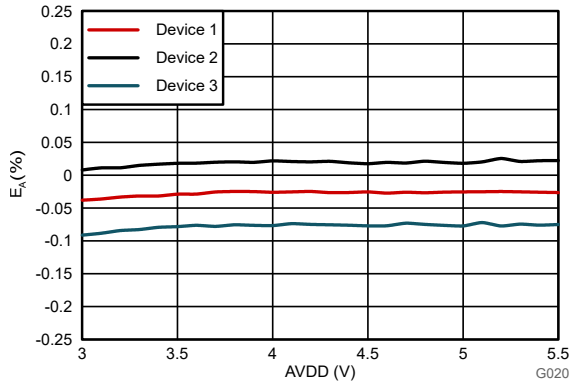

Figure 6-17. Attenuation Error vs High-Side Supply Voltage

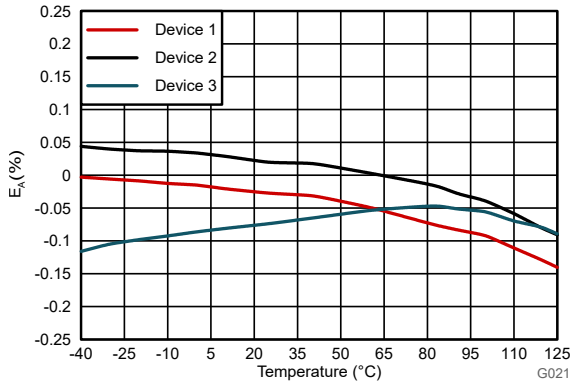

Figure 6-18. Attenuation Error vs Temperature

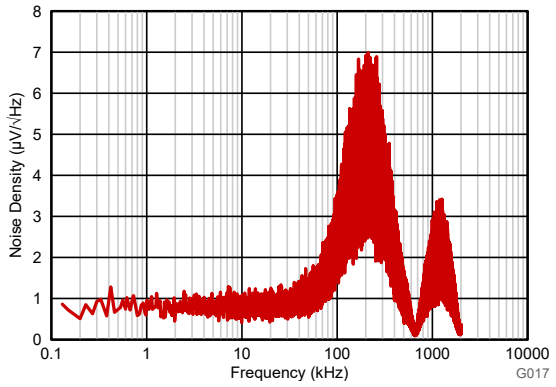

Figure 6-19. Input-Referred Noise Density vs Frequency

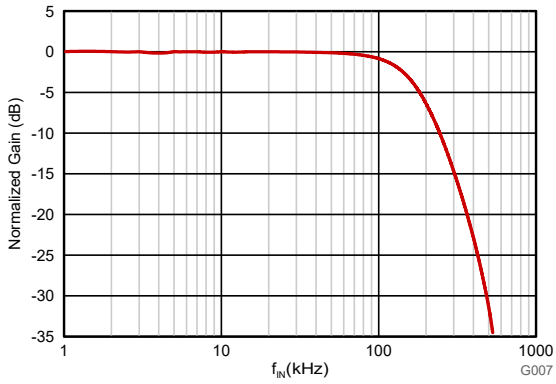

Figure 6-20. Normalized Gain vs Input Frequency

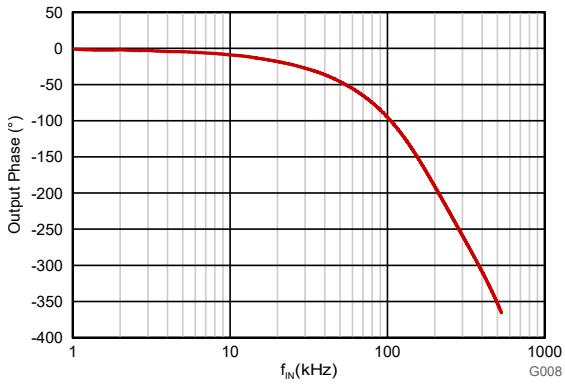

Figure 6-21. Output Phase vs Input Frequency

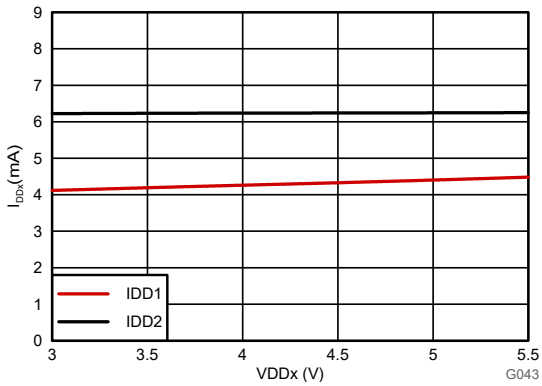

Figure 6-22. Supply Current vs Supply Voltage

Copyright © 2026 Texas Instruments Incorporated

6.13 Typical Characteristics (continued)

at VDD1 = 5V, VDD2 = 3.3V, SNSN = GND1, and f_{IN} = 10kHz (unless otherwise noted)

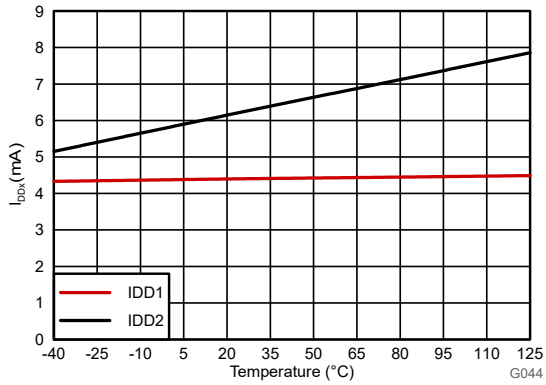

Figure 6-23. Supply Current vs Temperature

7 Detailed Description

7.1 Overview

The AMC0381D is a precision, galvanically isolated amplifier with a high-voltage DC, high impedance input, and fixed-gain differential output. The input stage of the device drives a second-order, delta-sigma (ΔΣ) modulator. The modulator converts the analog input signal into a digital bitstream that is transferred across the isolation barrier that separates the high-side from the low-side.

On the low-side, the received bitstream is processed by a fourth-order analog filter that outputs a differential signal at the OUTP and OUTN pins. This differential output signal is proportional to the input signal.

The SiO_2-based, capacitive isolation barrier supports a high level of magnetic field immunity, as described in the *ISO72x Digital Isolator Magnetic-Field Immunity* application note. The digital modulation used in the AMC0381D transmits data across the isolation barrier. This modulation, and the isolation barrier characteristics, result in high reliability and high common-mode transient immunity.

7.2 Functional Block Diagram

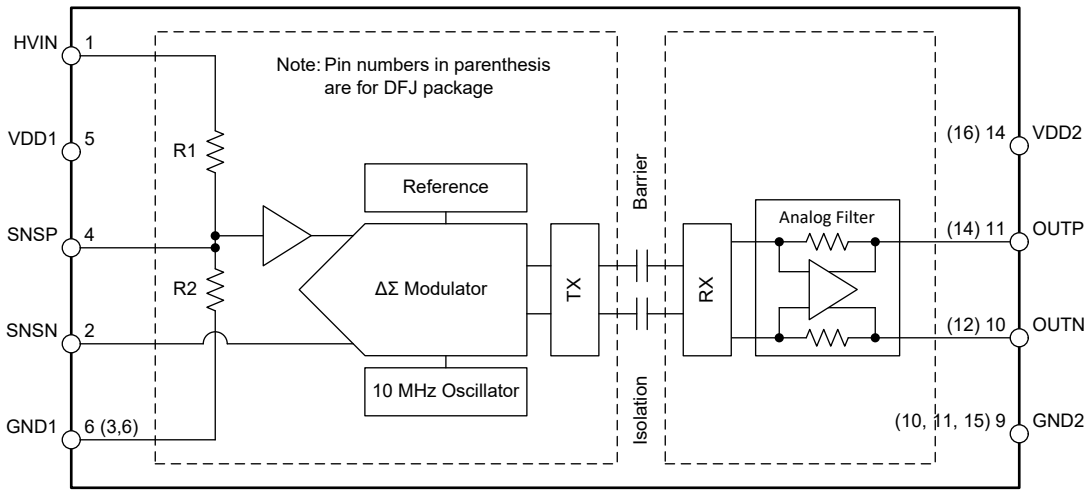

7.3 Feature Description

7.3.1 Analog Input

The resistive divider at the input of the AMC0381D scales down the voltage applied to the HVIN pin to a 1V linear full-scale level. This signal is available on the SNSP pin, which is also the input of the analog signal chain.

The high-impedance input buffer on the SNSP pin feeds a second-order, switched-capacitor, feed-forward ΔΣ modulator. The modulator converts the analog signal into a bitstream that is transferred across the isolation barrier, as described in the *Isolation Channel Signal Transmission* section.

Copyright © 2026 Texas Instruments Incorporated

7.3.2 Isolation Channel Signal Transmission

As shown in Figure 7-1, the AMC0381D uses an on-off keying (OOK) modulation scheme to transmit the modulator output bitstream across the SiO_2-based isolation barrier. The transmit driver (TX) is illustrated in the *Functional Block Diagram*. TX transmits an internally generated, high-frequency carrier across the isolation barrier to represent a digital *one*. However, TX does not send a signal to represent a digital *zero*. The nominal frequency of the carrier used inside the AMC0381D is 480MHz.

The receiver (RX) on the other side of the isolation barrier recovers and demodulates the signal and provides the input to the analog filter. The AMC0381D transmission channel is optimized to achieve the highest level of common-mode transient immunity (CMTI) and the lowest level of radiated emissions. The high-frequency carrier and RX/TX buffer switching cause these emissions.

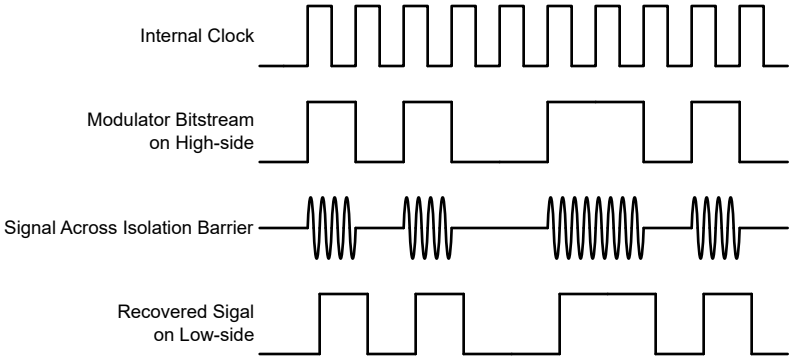

Figure 7-1. OOK-Based Modulation Scheme

7.3.3 Analog Output

The AMC0381D provides a differential analog output voltage on the OUTP and OUTN pins proportional to the input voltage. For input voltages in the range from $V_{FSR, MIN}$ to $V_{FSR, MAX}$, the device has a linear response with an output voltage equal to:

$$(V_{OUTP} – V_{OUTN}) = 2 × V_{IN} = 2 × (V_{HVIN} / [\text{resistive divider ratio}] – V_{SNSN}) \quad (1)$$

At zero input, both pins output the same common-mode output voltage V_{CMout}, as specified in the *Electrical Characteristics* table. For absolute input voltages greater than $|V_{FSR}|$ but less than $|V_{Clipping}|$, the differential output voltage continues to increase in magnitude, but with reduced linearity performance. The outputs saturate at a differential output voltage of $V_{CLIPout}$, as shown in Figure 7-2, if the input voltage exceeds the $V_{Clipping}$ value.

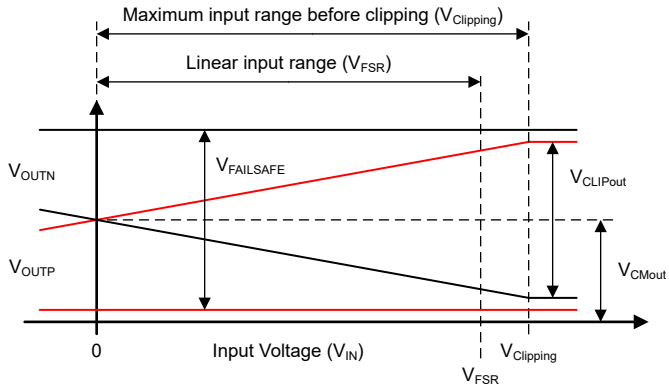

Figure 7-2. Input to Output Transfer Curve of the AMC0381D

The AMC0381D output offers a fail-safe feature that simplifies diagnostics on a system level. Figure 7-2 shows the behavior in fail-safe mode, in which the AMC0381D outputs a negative differential output voltage that does not occur under normal operating conditions. The fail-safe output is active:

- When the high-side supply VDD1 of the AMC0381D device is missing
- When the high-side supply VDD1 falls below the undervoltage threshold $VDD1_{UV}$

Use the maximum $V_{FAILSAFE}$ voltage specified in the *Electrical Characteristics* table as a reference value for fail-safe detection on a system level.

Copyright © 2026 Texas Instruments Incorporated

7.4 Device Functional Modes

The AMC0381D operates in one of the following states:

- Off-state: The low-side supply (VDD2) is below the $VDD2_{UV}$ threshold. The device is not responsive. OUTP and OUTN are in Hi-Z state. Internally, OUTP and OUTN are clamped to VDD2 and GND2 by ESD protection diodes.
- Missing high-side supply: The low-side of the device (VDD2) is supplied and within recommended operating conditions. The high-side supply (VDD1) is below the $VDD1_{UV}$ threshold. The device outputs the $V_{FAILSAFE}$ voltage.
- Analog input overrange (positive full-scale input): VDD1 and VDD2 are within recommended operating conditions but the analog input voltage V_{IN} is above the maximum clipping voltage $V_{Clipping, MAX}$. The device outputs positive $V_{CLIPout}$.
- Analog input underrange (negative full-scale input): VDD1 and VDD2 are within recommended operating conditions but the analog input voltage V_{IN} is below the minimum clipping voltage $V_{Clipping, MIN}$. The device outputs negative $V_{CLIPout}$.
- Normal operation: VDD1, VDD2, and V_{IN} are within the recommended operating conditions. The device outputs a differential voltage that is proportional to the input voltage.

Table 7-1 lists the operating modes.

Table 7-1. Device Operational Modes

OPERATING CONDITION	VDD1	VDD2	V_{IN}	DEVICE RESPONSE
Off	Don't care	$VDD2 < VDD2_{UV}$	Don't care	OUTP and OUTN are in Hi-Z state. Internally, OUTP and OUTN are clamped to VDD2 and GND2 by ESD protection diodes.
Missing high-side supply	$VDD1 < VDD1_{UV}$	Valid(1)	Don't care	The device outputs the $V_{FAILSAFE}$ voltage.
Input overrange	Valid(1)	Valid(1)	$V_{IN} > V_{Clipping, MAX}$	The device outputs positive $V_{CLIPout}$.
Input underrange	Valid(1)	Valid(1)	$V_{IN} < V_{Clipping, MIN}$	The device outputs negative $V_{CLIPout}$.
Normal operation	Valid(1)	Valid(1)	Valid(1)	The device outputs a differential voltage that is proportional to the input voltage.

(1) *Valid* denotes operation within the recommended operating conditions.

8 Application and Implementation

Note

Information in the following applications sections is not part of the TI component specification, and TI does not warrant its accuracy or completeness. TI's customers are responsible for determining suitability of components for their purposes, as well as validating and testing their design implementation to confirm system functionality.

8.1 Application Information

Industrial power systems such as motor drives are divided into two or more voltage domains that are galvanically isolated from each other. For example, the high-voltage domain includes the AC grid, DC link, and power stage for driving the motor. The low-voltage includes the system controller and human interface. The controller measures the value of the DC link voltage while remaining galvanically isolated from the high-voltage side for safety reasons. With the high-impedance input and galvanically isolated output, the AMC0381D enables this measurement.

8.2 Typical Application

The following image illustrates a simplified schematic of an AC inverter for a three-phase motor drive. The AMC0381D is used for DC link voltage sensing. In the power domain, the AMC0381D is connected directly between DC(+) and DC(–). The low-side gate driver supply is regulated to a 5V level to power the high-voltage side of the AMC0381D. In the signal domain, on the opposite side of the isolation barrier, the AMC0381D outputs a voltage proportional to the DC link voltage.

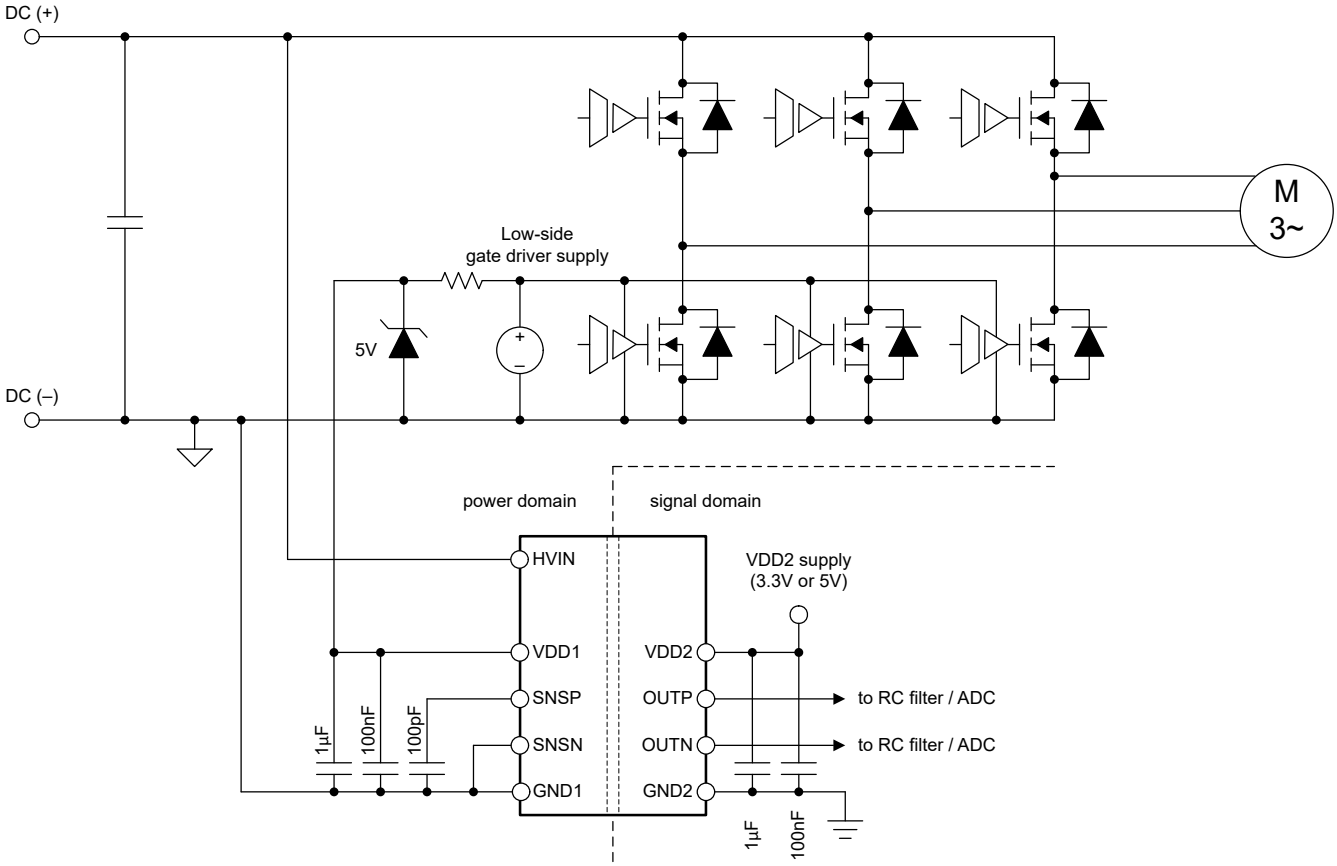

Figure 8-1. Using the AMC0381D in a Typical Application

Copyright © 2026 Texas Instruments Incorporated

8.2.1 Design Requirements

Table 8-1 lists the parameters for this typical application.

Table 8-1. Design Requirements

PARAMETER	VALUE
DC link voltage	450V (maximum)
High-side supply voltage	5V
Low-side supply voltage	3.3V

8.2.2 Detailed Design Procedure

In this design example the maximum DC link voltage is 450V. For best measurement resolution, select a device from the AMC0381D family with a linear input range that closest matches the peak input voltage. The AMC0381D06 supports a linear input range of 600V and is a good fit for the application. Connect HVIN directly to DC (+) and GND1 to DC (–); see the diagram in the *Typical Application* section.

8.2.2.1 Input Filter Design

Connect a filter capacitor to the SNSP pin to improve signal-to-noise performance of the signal path. Input noise with a frequency close to the ΔΣ modulator sampling frequency (typically 10MHz) is folded back into the low-frequency range by the modulator. The purpose of the RC filter is to attenuate high-frequency noise below the desired noise level of the measurement. In practice, a cutoff frequency that is two orders of magnitude lower than the modulator frequency yields good results.

The cutoff frequency of the input filter is determined by the internal sensing resistor R2 and the external filter capacitor C5. The cutoff frequency is calculated as $1 / (2 \times \pi \times R2 \times C5)$.

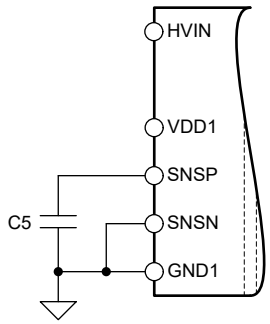

Figure 8-2. Input Filter

8.2.2.2 Differential to Single-Ended Output Conversion

Many systems use ADCs with single-ended inputs that cannot connect directly to the differential output of the AMC0381D. Figure 8-3 shows a circuit for converting the differential output signal into a single-ended signal in front of the ADC. For R1 = R3 and R2 = R4, the output voltage equals (R2 / R1) × (V_{OUTP} – V_{OUTN}) + V_{REF}. For C1 = C2 the bandwidth of the filter becomes 1 / (2 × π × C1 × R1). Configure the bandwidth of the filter to match the bandwidth requirement of the system. For best linearity, use capacitors with low voltage coefficients (such as NP0-type capacitors). For most applications, R1 = R2 = R3 = R4 = 3.3kΩ and C1 = C2 = 330pF yield good performance.

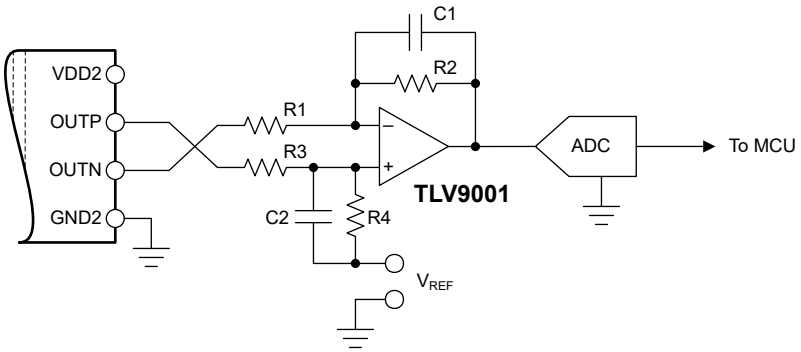

Figure 8-3. Connecting the AMC0381D Output to a Single-Ended Input ADC

The following reference guides provide further information on the general procedure to design the filtering and driving stages of SAR ADCs. These reference guides are available for download at www.ti.com.

- *18-Bit, 1MSPS Data Acquisition Block (DAQ) Optimized for Lowest Distortion and Noise* reference guide
- *18-Bit Data Acquisition Block (DAQ) Optimized for Lowest Power* reference guide

8.2.3 Application Curve

Figure 8-4 shows the typical full-scale step response of the AMC0381D.

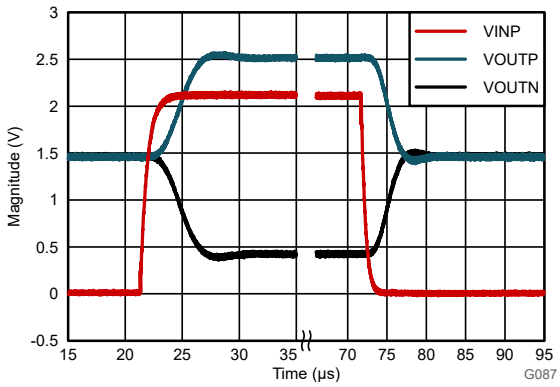

Figure 8-4. Step Response of the AMC0381D

8.3 Best Design Practices

Avoid any kind of leakage current between the HVIN and SNSP pin. Leakage current potentially introduces significant measurement error. See the *Layout Example* for layout recommendations.

Copyright © 2026 Texas Instruments Incorporated

8.4 Power Supply Recommendations

In a typical application, the high-side power supply (VDD1) for the AMC0381D is generated from the low-side supply (VDD2) by an isolated DC/DC converter. A low-cost option is based on the push-pull driver SN6501 and a transformer that supports the desired isolation voltage ratings.

The AMC0381D does not require any specific power-up sequencing. The high-side power supply (VDD1) is decoupled with a low-ESR, 100nF capacitor (C1) parallel to a low-ESR, 1µF capacitor (C2). The low-side power supply (VDD2) is equally decoupled with a low-ESR, 100nF capacitor (C3) parallel to a low-ESR, 1µF capacitor (C4). Place all four capacitors (C1, C2, C3, and C4) as close to the device as possible. Figure 8-5 shows a decoupling diagram for the AMC0381D.

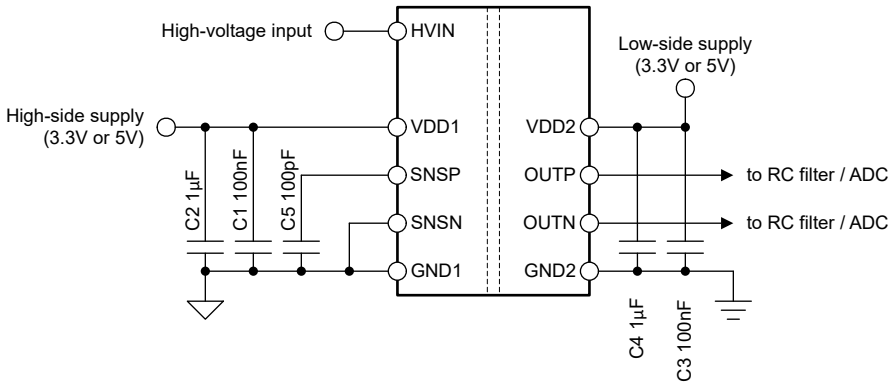

Figure 8-5. Decoupling of the AMC0381D

Verify capacitors provide adequate *effective* capacitance under the applicable DC bias conditions experienced in the application. Multilayer ceramic capacitors (MLCC) typically exhibit only a fraction of the nominal capacitance under real-world conditions. Consider this factor when selecting these capacitors. This issue is especially acute in low-profile capacitors, where the dielectric field strength is higher than in taller components. Reputable capacitor manufacturers provide capacitance versus DC bias curves that greatly simplify component selection.

8.5 Layout

8.5.1 Layout Guidelines

The *Layout Example* section details a layout recommendation with the critical placement of the decoupling capacitors (as close as possible to the AMC0381D supply pins). This example also depicts the placement of other components required by the device.

8.5.2 Layout Example

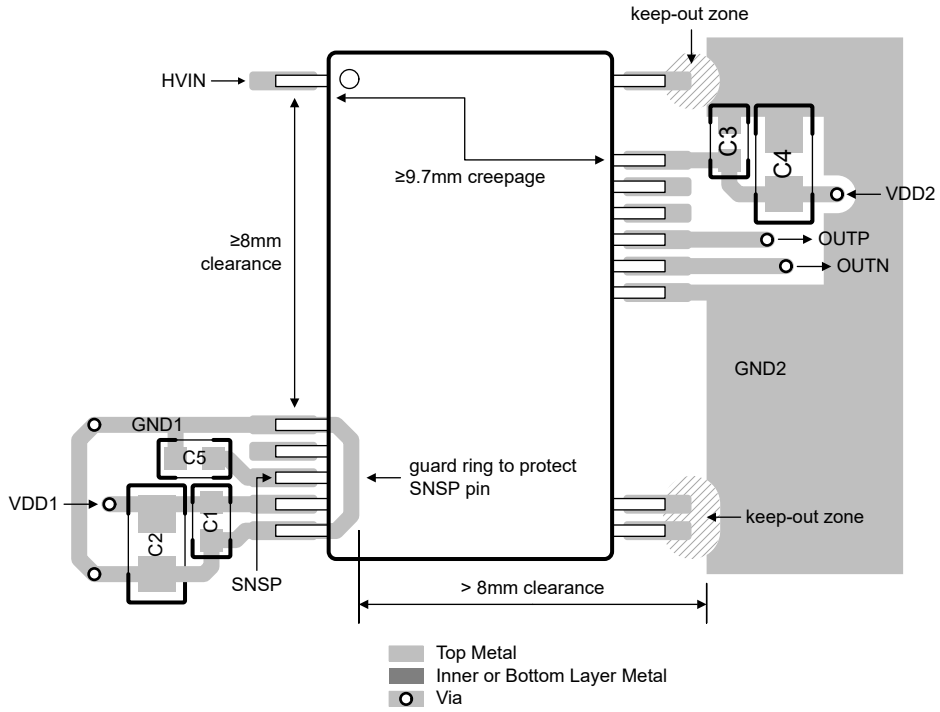

Figure 8-6. Recommended Layout of the AMC0381D (DFX Package)

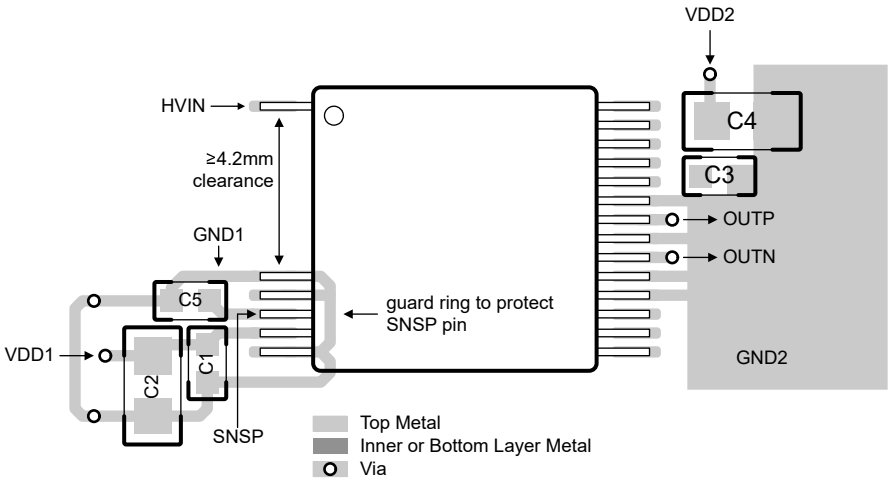

Figure 8-7. Recommended Layout of the AMC0381D (DFJ Package)

Copyright © 2026 Texas Instruments Incorporated

9 Device and Documentation Support

9.1 Documentation Support

9.1.1 Related Documentation

For related documentation, see the following:

- Texas Instruments, *Isolation Glossary* application note
- Texas Instruments, *Semiconductor and IC Package Thermal Metrics* application note
- Texas Instruments, *ISO72x Digital Isolator Magnetic-Field Immunity* application note
- Texas Instruments, *Isolated Amplifier Voltage Sensing Excel Calculator* design tool

9.2 Receiving Notification of Documentation Updates

To receive notification of documentation updates, navigate to the device product folder on ti.com. Click on *Notifications* to register and receive a weekly digest of any product information that has changed. For change details, review the revision history included in any revised document.

9.3 Support Resources

TI E2E™ support forums are an engineer's go-to source for fast, verified answers and design help — straight from the experts. Search existing answers or ask your own question to get the quick design help you need.

Linked content is provided "AS IS" by the respective contributors. They do not constitute TI specifications and do not necessarily reflect TI's views; see TI's Terms of Use.

9.4 Trademarks

TI E2E™ is a trademark of Texas Instruments.
All trademarks are the property of their respective owners.

9.5 Electrostatic Discharge Caution

This integrated circuit can be damaged by ESD. Texas Instruments recommends that all integrated circuits be handled with appropriate precautions. Failure to observe proper handling and installation procedures can cause damage.

ESD damage can range from subtle performance degradation to complete device failure. Precision integrated circuits may be more susceptible to damage because very small parametric changes could cause the device not to meet its published specifications.

9.6 Glossary

TI Glossary	This glossary lists and explains terms, acronyms, and definitions.

10 Revision History

NOTE: Page numbers for previous revisions may differ from page numbers in the current version.

Changes from November 15, 2025 to October 19, 2026 (from Revision B (November 2025) to Revision C (October 2026)) — **Page**

- Added DFJ package option 1
- Added pin 1 to pin 2 creepage distance 8

Changes from October 16, 2025 to November 15, 2025 (from Revision A (October 2025) to Revision B (November 2025)) — **Page**

- Changed V_{IORM} from 1410V to 2120V 8
- Changed V_{IOWM} from $1000V_{RMS}$ / $1410V_{PK}$ to $1500V_{RMS}$ / $2120V_{PK}$ 8
- Updated *Application and Implementation* section 22

Changes from September 22, 2025 to October 15, 2025 (from Revision A (September 2025) to Revision * (October 2025)) **Page**

- Changed AMC0381D06 and AMC0381D10 device status from *Product Preview* to *Production Data*.....3
- Added *Typical Characteristics* for AMC0381D06 and AMC0381D10 devices.....14

11 Mechanical, Packaging, and Orderable Information

The following pages include mechanical, packaging, and orderable information. This information is the most current data available for the designated devices. This data is subject to change without notice and revision of this document. For browser-based versions of this data sheet, refer to the left-hand navigation.

Copyright © 2026 Texas Instruments Incorporated

PACKAGING INFORMATION

Orderable part number	Status (1)	Material type (2)	Package | Pins	Package qty | Carrier	RoHS (3)	Lead finish/ Ball material (4)	MSL rating/ Peak reflow (5)	Op temp (°C)	Part marking (6)
AMC0381D06DFXR	Active	Production	SSOP (DFX) | 15	750 | LARGE T&R	Yes	NIPDAU	Level-3-260C-168 HR	-40 to 125	AMC0381D06
AMC0381D10DFXR	Active	Production	SSOP (DFX) | 15	750 | LARGE T&R	Yes	NIPDAU	Level-3-260C-168 HR	-40 to 125	AMC0381D10
AMC0381D16DFXR	Active	Production	SSOP (DFX) | 15	750 | LARGE T&R	Yes	NIPDAU	Level-3-260C-168 HR	-40 to 125	AMC0381D16

(1) **Status:** For more details on status, see our product life cycle.

(2) **Material type:** When designated, preproduction parts are prototypes/experimental devices, and are not yet approved or released for full production. Testing and final process, including without limitation quality assurance, reliability performance testing, and/or process qualification, may not yet be complete, and this item is subject to further changes or possible discontinuation. If available for ordering, purchases will be subject to an additional waiver at checkout, and are intended for early internal evaluation purposes only. These items are sold without warranties of any kind.

(3) **RoHS values:** Yes, No, RoHS Exempt. See the TI RoHS Statement for additional information and value definition.

(4) **Lead finish/Ball material:** Parts may have multiple material finish options. Finish options are separated by a vertical ruled line. Lead finish/Ball material values may wrap to two lines if the finish value exceeds the maximum column width.

(5) **MSL rating/Peak reflow:** The moisture sensitivity level ratings and peak solder (reflow) temperatures. In the event that a part has multiple moisture sensitivity ratings, only the lowest level per JEDEC standards is shown. Refer to the shipping label for the actual reflow temperature that will be used to mount the part to the printed circuit board.

(6) **Part marking:** There may be an additional marking, which relates to the logo, the lot trace code information, or the environmental category of the part.

Multiple part markings will be inside parentheses. Only one part marking contained in parentheses and separated by a "~" will appear on a part. If a line is indented then it is a continuation of the previous line and the two combined represent the entire part marking for that device.

Important Information and Disclaimer: The information provided on this page represents TI's knowledge and belief as of the date that it is provided. TI bases its knowledge and belief on information provided by third parties, and makes no representation or warranty as to the accuracy of such information. Efforts are underway to better integrate information from third parties. TI has taken and continues to take reasonable steps to provide representative and accurate information but may not have conducted destructive testing or chemical analysis on incoming materials and chemicals. TI and TI suppliers consider certain information to be proprietary, and thus CAS numbers and other limited information may not be available for release.

In no event shall TI's liability arising out of such information exceed the total purchase price of the TI part(s) at issue in this document sold by TI to Customer on an annual basis.

OTHER QUALIFIED VERSIONS OF AMC0381D :

- Automotive : AMC0381D-Q1

NOTE: Qualified Version Definitions:

- Automotive - Q100 devices qualified for high-reliability automotive applications targeting zero defects

TAPE AND REEL INFORMATION

REEL DIMENSIONS

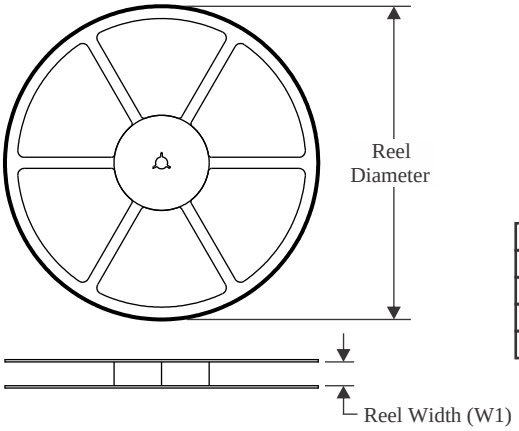

TAPE DIMENSIONS

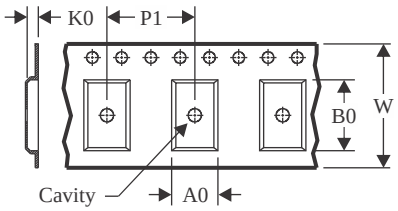

A0	Dimension designed to accommodate the component width
B0	Dimension designed to accommodate the component length
K0	Dimension designed to accommodate the component thickness
W	Overall width of the carrier tape
P1	Pitch between successive cavity centers

QUADRANT ASSIGNMENTS FOR PIN 1 ORIENTATION IN TAPE

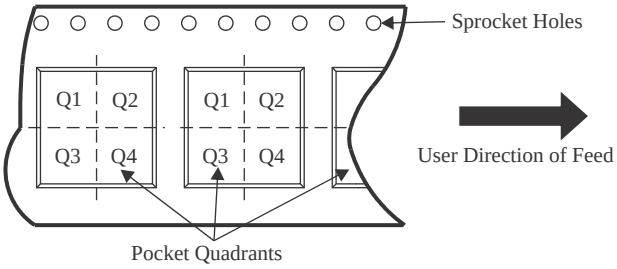

*All dimensions are nominal

Device	Package Type	Package Drawing	Pins	SPQ	Reel Diameter (mm)	Reel Width W1 (mm)	A0 (mm)	B0 (mm)	K0 (mm)	P1 (mm)	W (mm)	Pin1 Quadrant
AMC0381D06DFXR	SSOP	DFX	15	750	330.0	24.4	10.85	13.4	4.0	16.0	24.0	Q1
AMC0381D10DFXR	SSOP	DFX	15	750	330.0	24.4	10.85	13.4	4.0	16.0	24.0	Q1
AMC0381D16DFXR	SSOP	DFX	15	750	330.0	24.4	10.85	13.4	4.0	16.0	24.0	Q1

TAPE AND REEL BOX DIMENSIONS

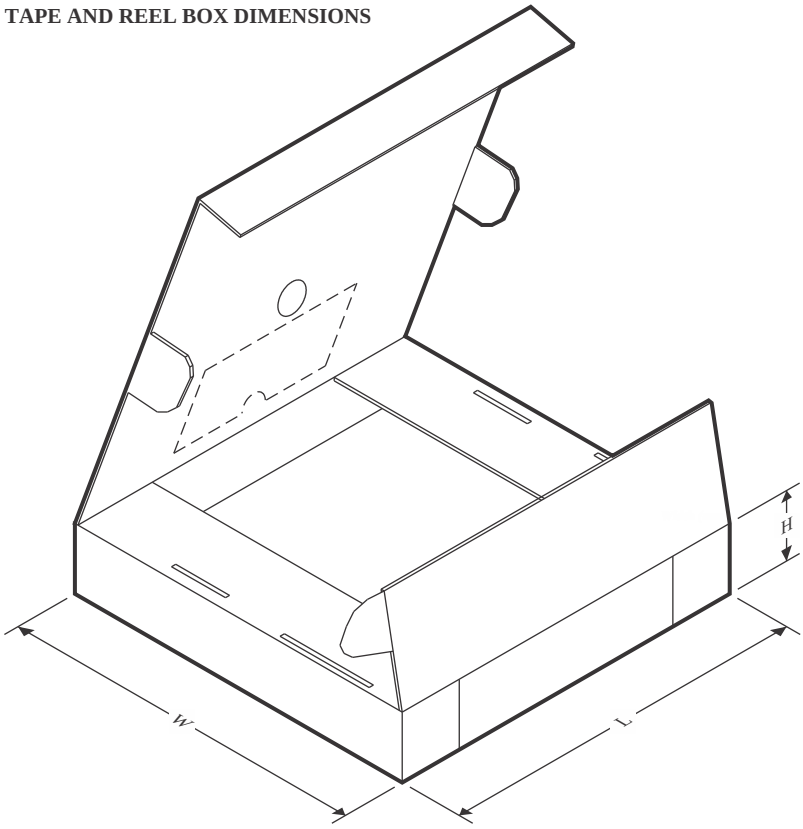

*All dimensions are nominal

Device	Package Type	Package Drawing	Pins	SPQ	Length (mm)	Width (mm)	Height (mm)
AMC0381D06DFXR	SSOP	DFX	15	750	350.0	350.0	43.0
AMC0381D10DFXR	SSOP	DFX	15	750	350.0	350.0	43.0
AMC0381D16DFXR	SSOP	DFX	15	750	350.0	350.0	43.0

PACKAGE OUTLINE

DFX0015A

SSOP - 3.55 mm max height

SMALL OUTLINE PACKAGE

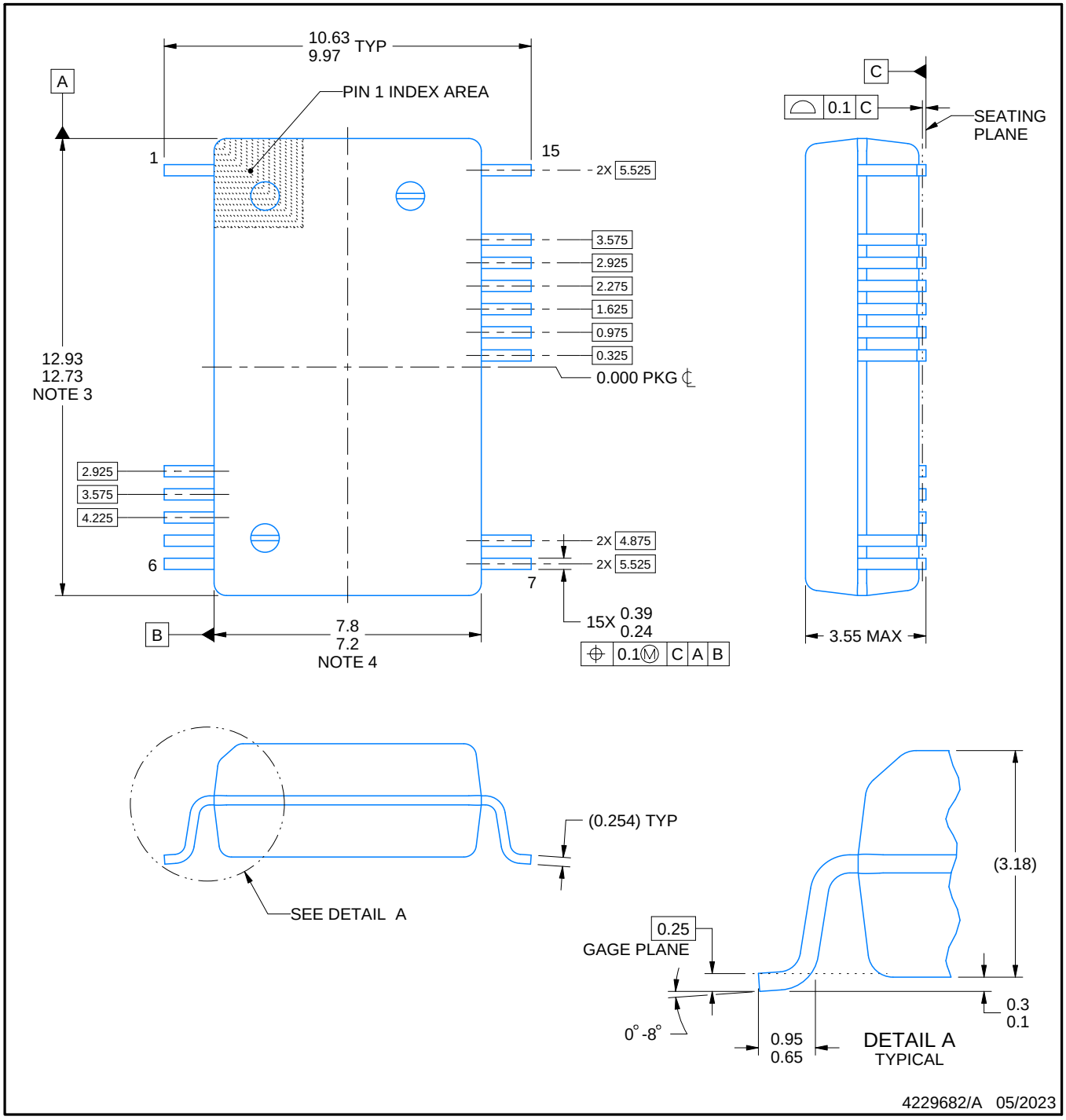

NOTES:

1. All linear dimensions are in millimeters. Any dimensions in parenthesis are for reference only. Dimensioning and tolerancing per ASME Y14.5M.
2. This drawing is subject to change without notice.
3. This dimension does not include mold flash, protrusions, or gate burrs. Mold flash, protrusions, or gate burrs shall not exceed 0.15 mm per side.
4. This dimension does not include interlead flash. Interlead flash shall not exceed 0.25 mm per side.

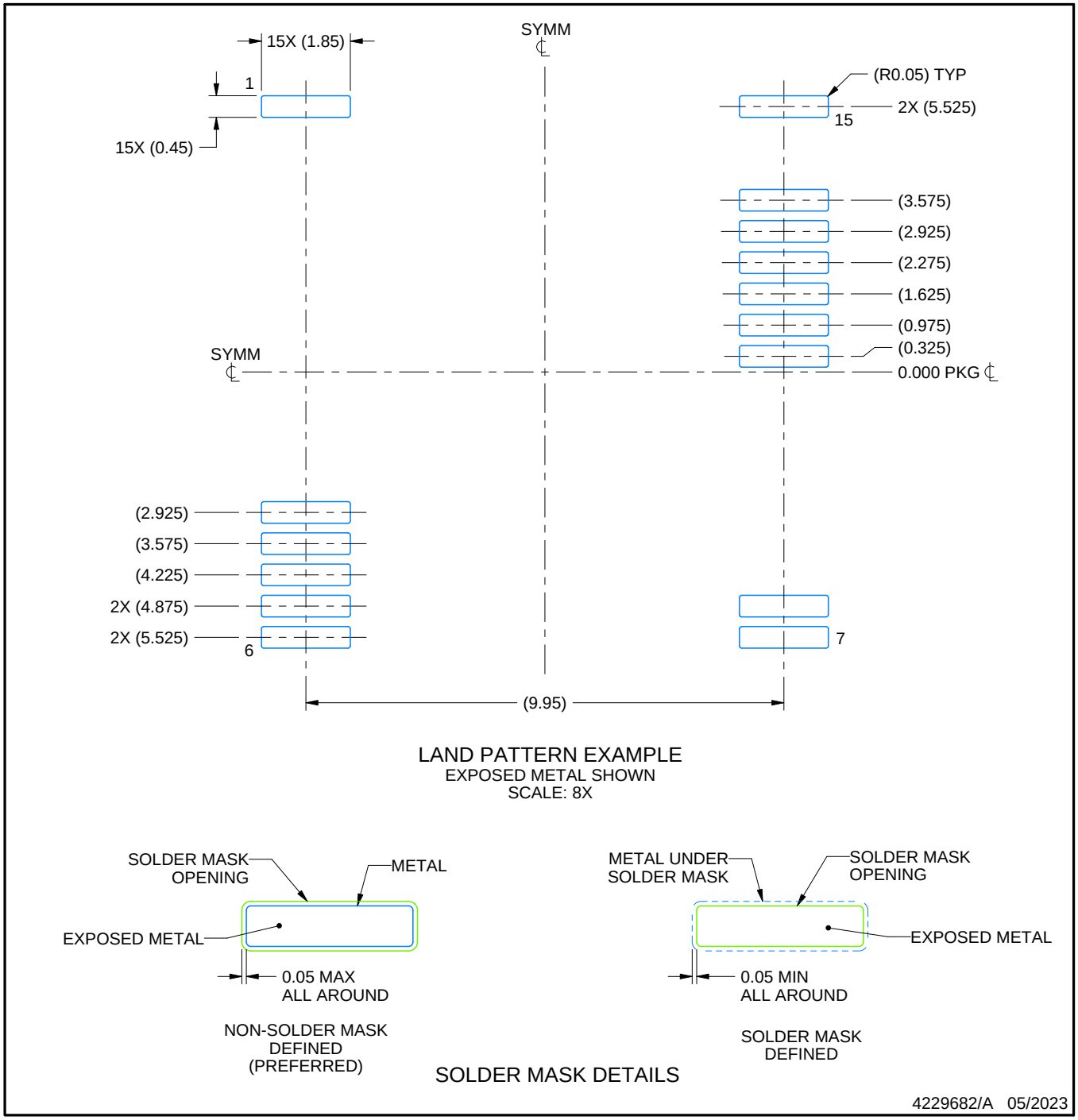

NOTES: (continued)

5. Publication IPC-7351 may have alternate designs.
6. Solder mask tolerances between and around signal pads can vary based on board fabrication site.

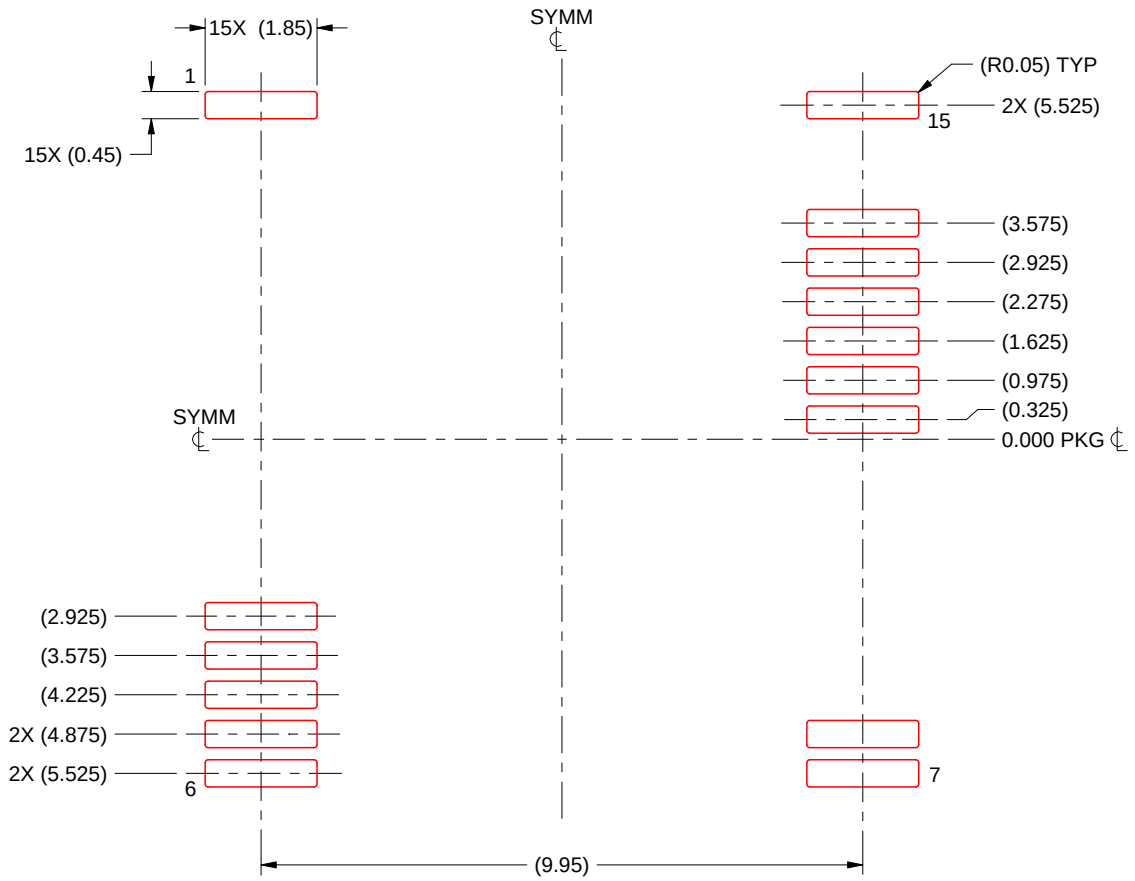

SOLDER PASTE EXAMPLE
BASED ON 0.125 mm THICK STENCIL
SCALE: 8X

4229682/A 05/2023

NOTES: (continued)

7. Laser cutting apertures with trapezoidal walls and rounded corners may offer better paste release. IPC-7525 may have alternate design recommendations.
8. Board assembly site may have different recommendations for stencil design.

IMPORTANT NOTICE AND DISCLAIMER

TI PROVIDES TECHNICAL AND RELIABILITY DATA (INCLUDING DATASHEETS), DESIGN RESOURCES (INCLUDING REFERENCE DESIGNS), APPLICATION OR OTHER DESIGN ADVICE, WEB TOOLS, SAFETY INFORMATION, AND OTHER RESOURCES “AS IS” AND WITH ALL FAULTS, AND DISCLAIMS ALL WARRANTIES, EXPRESS AND IMPLIED, INCLUDING WITHOUT LIMITATION ANY IMPLIED WARRANTIES OF MERCHANTABILITY, FITNESS FOR A PARTICULAR PURPOSE OR NON-INFRINGEMENT OF THIRD PARTY INTELLECTUAL PROPERTY RIGHTS.

These resources are intended for skilled developers designing with TI products. You are solely responsible for (1) selecting the appropriate TI products for your application, (2) designing, validating and testing your application, and (3) ensuring your application meets applicable standards, and any other safety, security, regulatory or other requirements.

These resources are subject to change without notice. TI grants you permission to use these resources only for development of an application that uses the TI products described in the resource. Other reproduction and display of these resources is prohibited. No license is granted to any other TI intellectual property right or to any third party intellectual property right. TI disclaims responsibility for, and you fully indemnify TI and its representatives against any claims, damages, costs, losses, and liabilities arising out of your use of these resources.

TI’s products are provided subject to TI’s Terms of Sale, TI’s General Quality Guidelines, or other applicable terms available either on ti.com or provided in conjunction with such TI products. TI’s provision of these resources does not expand or otherwise alter TI’s applicable warranties or warranty disclaimers for TI products. Unless TI explicitly designates a product as custom or customer-specified, TI products are standard, catalog, general purpose devices.

TI objects to and rejects any additional or different terms you may propose.

Copyright © 2026, Texas Instruments Incorporated

Last updated 10/2025