TPS281C30x 60V Tolerant, 30mΩ, Single-Channel Smart High-Side Switch

1 Features

- Wide operating voltage range: 6V to 36V
- 64V DC tolerance when disabled
- Low R_{ON}: 30mΩ typical, 55mΩ maximum
- Improve system-level reliability through adjustable current limiting
  - Version A, C: 1A to 5A (fixed 0.5A)
  - Version B, D, E: 2A to 10A (fixed 0.5A)
- Accurate current sensing
  - ±4% at 1A in standard sense mode
  - ±12.5% at 6mA in high accuracy sense mode
- Integrated inductive discharge clamp > 65V
- Low standby current of < 1µA (standby mode only available in version A, B, C, D)
- Low quiescent current (Iq) of < 1.5mA
- Functional safety capable
- Operating junction temperature: –40 to 125°C
- Input control: 1.8V, 3.3V, and 5V logic compatible
- Integrated fault sense voltage scaling for ADC protection
- Open-load detection in off-state
- Thermal shutdown and swing detection
- 14-pin thermally-enhanced TSSOP package
- 20-pin thermally-enhanced QFN package

2 Applications

- Digital output module
- Safe torque off (STO)
- Holding brake
- General resistive, inductive, and capacitive loads

3 Description

TPS281C30x is a single channel smart high-side switch designed to meet the requirements of industrial control systems. The low R_{ON} (30mΩ) minimizes device power dissipation, driving a wide range of output load current up to 6A DC and the 64V DC tolerance improves system robustness.

The device integrates protection features such as thermal shut down, output clamp, and current limit. These features improve system robustness during fault events such as short circuit. TPS281C30x implements an adjustable current limiting circuit that improves the reliability of the system by reducing inrush current when driving large capacitive loads and minimizing overload current. To drive high inrush current loads such as lamps or fast charging capacitive loads, TPS281C30x implements an inrush current time period with a higher level of allowed current. The device also provides an accurate load current sense that allows for improved load diagnostics such as overload and open-load detection enabling better predictive maintenance.

TPS281C30E provides enhanced Electrical Fast Transient (EFT) immunity, where the device stays off with up to 2.5kV EFT pulse applied at VS or VOUT, 10nF output capacitor and 100pF coupling capacitor between the pulse generator and the output. The EFT level can be further increased if a larger output capacitor is used. The enhanced EFT immunity improves the robustness of the system against undesired coupling in the industrial systems.

TPS281C30x is available in a small 14-pin, 4.4mm × 5mm HTSSOP leaded package (version A, B, C, D) with 0.65mm pin pitch and 20-pin, 5mm × 5mm QFN with 0.65mm pin pitch (all versions) minimizing the PCB footprint.

Package Information

PART NUMBER	PACKAGE(1)	PACKAGE SIZE(2)
TPS281C30x	RGW (QFN, 20)	5.00mm × 5.00mm

(1) For all available packages, see the orderable addendum at the end of the datasheet. Version E only available in QFN package.
(2) The package size (length × width) is a nominal value and includes pins, where applicable.

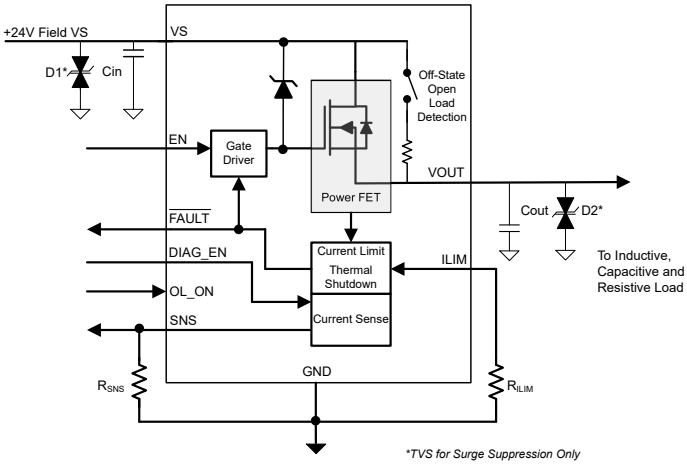

Typical Application Schematic

An IMPORTANT NOTICE at the end of this data sheet addresses availability, warranty, changes, use in safety-critical applications, intellectual property matters and other important disclaimers. PRODUCTION DATA.

Table of Contents

1 Features....1
2 Applications....1
3 Description....1
4 Device Comparison Table....3
5 Pin Configuration and Functions....4
5.1 Recommended Connection for Unused Pins....4
6 Specifications....6
6.1 Absolute Maximum Ratings....6
6.2 ESD Ratings....6
6.3 Recommended Operating Conditions....6
6.4 Thermal Information....7
6.5 Electrical Characteristics....7
6.6 SNS Timing Characteristics....13
6.7 Switching Characteristics....13
6.8 Typical Characteristics....15
7 Parameter Measurement Information....20
8 Detailed Description....22
8.1 Overview....22
8.2 Functional Block Diagram....23
8.3 Device Functional Modes....24
8.4 Feature Description....24
9 Application and Implementation....43
9.1 Application Information....43
9.2 Typical Application....43
9.3 Power Supply Recommendations....45
9.4 Layout....45
10 Device and Documentation Support....48
10.1 Receiving Notification of Documentation Updates....48
10.2 Support Resources....48
10.3 Trademarks....48
10.4 Electrostatic Discharge Caution....48
10.5 Glossary....48
11 Revision History....48
12 Mechanical, Packaging, and Orderable Information....48

Copyright © 2026 Texas Instruments Incorporated

4 Device Comparison Table

Table 4-1. Device Options

DEVICE VERSION	PART NUMBER	CURRENT LIMIT RANGE	INTEGRATED CLAMP FOR INDUCTIVE LOADS	ENHANCED EFT IMMUNITY	STANDBY MODE DURING OFF STATE	OFF STATE OPEN LOAD DETECTION
A	TPS281C30A	1A to 5A	Yes	No	Yes	Yes
B	TPS281C30B	2A to 10A	Yes	No	Yes	Yes
C	TPS281C30C	1A to 5A	No	No	Yes	Yes
D	TPS281C30D	2A to 10A	No	No	Yes	Yes
E	TPS281C30E	2A to 10A	No	Yes	No	No

Copyright © 2026 Texas Instruments Incorporated

5 Pin Configuration and Functions

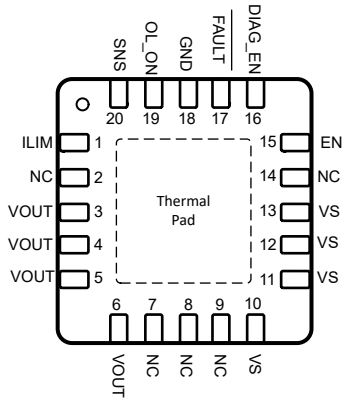

Figure 5-1. RGW Package,20-Pin QFN(Top View)

Table 5-1. Pin Functions

PIN		TYPE[(1)]	DESCRIPTION
NAME	RGW		
GND	18	P	Ground of device. Connect to resistor- diode ground network to have reverse polarity protection.
EN	15	I	Input control for channel activation. Internal pulldown.
DIAG_EN	16	I	Enable-disable pin for diagnostics and current sensing. Internal pulldown.
$\overline{\text{FAULT}}$	17	O	Open drain global fault output. Referred to $\overline{\text{FLT}}$, or fault pin.
OL_ON	19	I	Enable-disable pin for higher resolution current sense(Only available when $I_{OUT<}$ I_{Ksns2_EN}). Internal pulldown.
SNS	20	O	Analog current output corresponding to load current. Connect a resistor to GND to convert to voltage.
ILIM	1	O	Adjustable current limit. Connect a resistor to set the current limit. Optionally short to ground or leave pin floating to set the current limit to the default internal current limit. See the electrical characteristics for more information.
NC	2, 7, 8, 9, 14	N/A	No internal connection.
VOUT	3, 4, 5, 6	P	Output of high side switch, connect to load.
VS	10, 11, 12, 13	P	Power supply input.
Pad	Pad	—	Thermal pad, internally shorted to ground.

(1) I = input, O = output, P = power

5.1 Recommended Connection for Unused Pins

TPS281C30x is designed to provide an enhanced set of diagnostic and protection features. However, if the system design only allows for a limited number of I/O connections, some pins are considered as optional.

Table 5-2. Connections for Optional Pins

PIN NAME	CONNECTION IF NOT USED	IMPACT IF NOT USED
SNS	Ground through 10kΩ resistor	Analog sense is not available.
ILIM	Float	If the ILIM pin is left floating, the device is set to the default internal current-limit threshold. This is considered a fault state for the device.
$\overline{\text{FAULT}}$	Float	If the $\overline{\text{FAULT}}$ pin is unused, the system cannot read faults from the output.
DIAG_EN	Float or ground through R_{PROT} resistor	With DIAG_EN unused, the analog sense, open-load, and short-to-supply diagnostics are not available.

Copyright © 2026 Texas Instruments Incorporated

Table 5-2. Connections for Optional Pins (continued)

PIN NAME	CONNECTION IF NOT USED	IMPACT IF NOT USED
OL_ON	Ground through R_{PROT} resistor	With OL_ON unused, the high accuracy sense mode is not available.

6 Specifications

6.1 Absolute Maximum Ratings

Over operating free-air temperature range (unless otherwise noted)[1]

		MIN	MAX	UNIT
Continuous supply voltage, V_S with respect to IC GND: Version A, B		-0.7	64	V
Continuous supply voltage, V_{OUT} with respect to IC GND: Version A, B		-60	64	V
Transient (< 100 us) voltage at the supply pin, V_S with respect to IC GND: Version A, B		-0.7	81	V
Continuous supply voltage, V_S with respect to IC GND: Version C, D, E		-0.7	83	V
Continuous supply voltage, V_{OUT} with respect to IC GND: Version C, D, E		-60	83	V
Continuous voltage across the VS and VOUT pins (V_S - V_{OUT}): Version C, D, E		-0.7	83	V
Enable pin voltage, V_{EN}		–1	6	V
OL_ON pin voltage, V_{OL_ON}		–1	6	V
DIAG_EN pin voltage, V_{DIAG_EN}		–1	6	V
Sense pin voltage, V_{SNS}		–1	6	V
$\overline{FAULT}$ pin voltage, $V_{\overline{FAULT}}$		–1	6	V
Reverse ground current, I_{GND}	V_S < 0V		–50	mA
Maximum junction temperature, T_J			150	°C
Storage temperature, T_{stg}		–65	150	°C

(1) Stresses beyond those listed under *Absolute Maximum Ratings* may cause permanent damage to the device. These are stress ratings only, which do not imply functional operation of the device at these or any other conditions beyond those indicated under *Recommended Operating Conditions*. Exposure to absolute maximum rated conditions for extended periods may affect device reliability.

6.2 ESD Ratings

				VALUE	UNIT
V_{ESD}	Electrostatic discharge	Human body model (HBM), per ANSI/ESDA/JEDEC JS-001[1]	All pins except VS and VOUT	±2000	V
		Human body model (HBM), per ANSI/ESDA/JEDEC JS-001[1]	VS and VOUT with respect to GND	±4000	V
		Charged device model (CDM), per JEDEC specification JESD22-C101, all pins[2]	All pins	±750	V
$V_{(ESD4)}$	Electrostatic discharge	Contact discharge, per IEC 61000-4-2 [4]	VS and VOUT	±8000	V
$V_{(EFT)}$	Electrostatic discharge	Electrical fast transient, per IEC 61000-4-4, version E [3]	VS and VOUT	±2500	V
$V_{(surge)}$	Electrostatic discharge	Surge protection with 42 Ω, per IEC 61000-4-5; 1.2/50 µs [4]	VS and VOUT	±1000	V

(1) JEDEC document JEP155 states that 500V HBM allows safe manufacturing with a standard ESD control process.
(2) JEDEC document JEP157 states that 250V CDM allows safe manufacturing with a standard ESD control process.
(3) Tested with application circuit and supply voltage (VS) of 24V, ENx pins High (Output Enabled) and and EN pins Low (Outputs Disabled). 2.5kV is rated for 100pF coupling capacitor, 10nF output capacitor at the output. The max EFT voltage level will change with different coupling capacitor and output capacitor used.
(4) Tested with application circuit and supply voltage (VS) of 24V, ENx pins High (Output Enabled) and and EN pins Low (Outputs Disabled)

6.3 Recommended Operating Conditions

over operating free-air temperature range (unless otherwise noted) [1]

		MIN	MAX	UNIT
$V_{S_OP_NOM}$	Nominal supply voltage[1]	6.0	36	V
$V_{S_OP_MAX}$	Extended operating voltage[2]	6.0	48	V

Copyright © 2026 Texas Instruments Incorporated

over operating free-air temperature range (unless otherwise noted) [1]

		MIN	MAX	UNIT
V_{EN}	Enable voltage	–1	5.5	V
V_{OL_ON}	OL_ON pin voltage, V_{OL_ON}	–1	5.5	V
V_{DIAG_EN}	Diagnostic Enable voltage	–1	5.5	V
V_{FAULT}	$\overline{FAULT}$ pin voltage	–1	5.5	V
V_{SNS}	Sense voltage	–1	5.5	V
T_A	Operating free-air temperature	–40	125	°C

(1) All operating voltage conditions are measured with respect to device GND
(2) Device will function within extended operating range, however some parametric values might not apply

6.4 Thermal Information

THERMAL METRIC[1][2]		TPS281C30x RGW (QFN) 20 PINS	UNIT
$R_{\theta JA}$	Junction-to-ambient thermal resistance	28.9	°C/W
$R_{\theta JC(top)}$	Junction-to-case (top) thermal resistance	19.7	°C/W
$R_{\theta JB}$	Junction-to-board thermal resistance	7.5	°C/W
ψ_{JT}	Junction-to-top characterization parameter	0.2	°C/W
ψ_{JB}	Junction-to-board characterization parameter	7.5	°C/W
$R_{\theta JC(bot)}$	Junction-to-case (bottom) thermal resistance	0.8	°C/W

(1) For more information about traditional and new thermal metrics, see the SPRA953 application report.
(2) The thermal parameters are based on a 4-layer PCB according to the JESD51-5 and JESD51-7 standards.

6.5 Electrical Characteristics

V_S = 6V to 36 V, T_A= –40°C to 125°C (unless otherwise noted)

PARAMETER		TEST CONDITIONS		MIN	TYP	MAX	UNIT
VS SUPPLY VOLTAGE AND CURRENT							
IL_{NOM}	Continuous load current	V_{EN} = HI	T_{AMB} = 85°C		6		A
$I_{STBY, VS}$	Total device standby current (including MOSFET) with diagnostics disabled (Ver. A, B, C, D)	VS ≤ 36 V, V_{EN} = V_{DIAG_EN} = LO, V_{OUT} = 0V	T_J = -40°C to 85°C		0.25	0.7	µA
	Total device standby current (including MOSFET) with diagnostics disabled (Ver. A, B, C, D)	VS ≤ 36 V, V_{EN} = V_{DIAG_EN} = LO, V_{OUT} = 0V	T_J = 150°C		0.63	6	µA
I_{STBY, VS_DIAG}	V_S standby current with diagnostics enabled (Ver. A, B, C, D)	VS ≤ 36V, V_{EN} = LO, V_{DIAG_EN} = HI, V_{OUT} = 0V			1.2	1.5	mA
$I_{Q(OFF), VS}$	V_S quiescent during OFF state (Ver. E)	VS ≤ 60V, V_{EN} = 0V, V_{OUT} = 24V, V_{DIAG} = 0V	T_J = -40°C to 85°C			0.95	mA
			T_J = 125°C			0.98	mA
$I_{Q, VS}$	V_S quiescent current with diagnostics disabled	V_{EN} = HI, V_{DIAG_EN} = LO	I_{OUT} = 0A		0.98	1.3	mA
I_{Q, VS_DIAG}	V_S quiescent current with diagnostics enabled	V_{ENx} = HI, V_{DIAG_EN} = HI	I_{OUT} = 0A		1.0	1.5	mA
t_{STBY}	Standby mode delay time (Ver. A, B, C, D)	V_{EN} = V_{DIAG_EN} = 0V to standby			20		ms

Copyright © 2026 Texas Instruments Incorporated

6.5 Electrical Characteristics (continued)

V_S = 6V to 36 V, T_A= –40°C to 125°C (unless otherwise noted)

PARAMETER		TEST CONDITIONS		MIN	TYP	MAX	UNIT
$I_{OUT(OFF)}$	Output leakage current (Ver. A, B, C, D)	VS ≤ 36 V, V_{EN} = V_{DIAG_EN} = 0V, V_{OUT} = 0V	T_J = 85°C			0.4	µA
			T_J = 125°C		0.5	6	µA
$I_{OUT(OFF)}$	Output leakage current (Ver. E)	VS ≤ 36 V, V_{EN} = V_{DIAG_EN} = 0V, V_{OUT} = 0V	T_J = –40°C to 85°C			28	µA
			T_J = 125°C			28	µA
		VS ≤ 36 V, V_{EN} = V_{DIAG_EN} = 0V, V_{OUT} = 10V	T_J = -40°C to 85°C	-6		9	µA
			T_J = 125°C	-10		10	µA
t_{EFT_DELAY}	Delay for EFT protection after device turnoff (Ver. E)	VS ≤ 60V, V_{EN} = 0V, V_{OUT} floating, V_{DIAG} = 0V	T_J = -40°C to 125°C			270	µs
VS UNDERVOLTAGE LOCKOUT (UVLO) INPUT							
$V_{S,UVLOR}$	V_S undervoltage lockout rising	Measured with respect to the GND pin of the device		5.0	5.4	5.75	V
$V_{S,UVLOF}$	V_S undervoltage lockout falling	Measured with respect to the GND pin of the device		4.1	4.5	4.85	V
VS OVERVOLTAGE LOCKOUT (OVLO) INPUT							
$V_{S,OVPR}$	V_S overvoltage protection rising (Ver. A, B, C, D)	Measured with respect to the GND pin of the device, V_{EN} = 5V		51	54	57	V
	V_S overvoltage protection rising (Ver. E)	Measured with respect to the GND pin of the device, V_{EN} = 5V		50	54	57	V
$V_{S,OVPF}$	V_S overvoltage protection recovery falling	Measured with respect to the GND pin of the device, V_{EN} = 5V		49	52	56	V
$V_{S,OVPH}$	V_S overvoltage protection threshold hysteresis	Measured with respect to the GND pin of the device, V_{EN} = 5V			1.5		V
$t_{VS,OVP}$	V_S overvoltage protection deglitch time	Time from triggering the OVP fault to FET turn-off			110	160	µs
VDS CLAMP							
$V_{DS,Clamp}$	V_{DS} clamp voltage	Version A, B FET current = 10mA	V_S = 24 V	65	72.5	80	V
			V_S = 6V	48	53	58	V
RON CHARACTERISTICS							
R_{ON}	VS to VOUT On-resistance	Version B, D, E = 0.5A ≤ I_{OUT} ≤ 6A, A,C = 0.5A ≤ I_{OUT} ≤ 3A V_S = 24V	T_J = 25°C		29		mΩ
			T_J = 125°C			55	mΩ
$R_{ON(REV)}$	On-resistance during reverse polarity	Version B, D, E = 0.5A ≤ I_{OUT} ≤ 6A, A,C = 0.5A ≤ I_{OUT} ≤ 3A V_S = -24V	T_J = -40°C to 125°C		30	60	mΩ
R_{ON_AUXFET}	VS to VOUT On-resistance High Accuracy Sense Mode	V_S = 24V, I_{OUT} = 40mA OL_ON=DIAG_EN=5V	T_J = -40°C to 125°C		5.2	12	Ω
CURRENT LIMIT CHARACTERISTICS							
K_{CL}	Current Limit Ratio	Device Version A, C	R_{ILIM} = 10kΩ to 50kΩ	40	50	60	A * kΩ
		Device Version B, D, E	R_{ILIM} = 10kΩ to 50kΩ	80	100	120	A * kΩ
$I_{LIM_STARTUP}$	Peak current prior to regulation when switch is enabled	Device Version A, C	R_{ILIM} = 10kΩ to 50kΩ		2x I_{CL}	6.5	A
		Device Version B, D, E	R_{ILIM} = 10kΩ to 50kΩ		2x I_{CL}	14	A
$t_{LIM_STARTUP_DELAY}$	Peak current delay time prior to regulation when switch is enabled			7		12	ms

Copyright © 2026 Texas Instruments Incorporated

6.5 Electrical Characteristics (continued)

V_S = 6V to 36 V, T_A= –40°C to 125°C (unless otherwise noted)

PARAMETER		TEST CONDITIONS		MIN	TYP	MAX	UNIT
I_{CL}	Current Limit level	Device Version A, C Short circuit condition	R_{ILIM} = 50kΩ	0.8	1	1.2	A
			R_{ILIM} = 25kΩ	1.8	2	2.2	A
			R_{ILIM} = 16.7kΩ	2.7	3	3.3	A
			R_{ILIM} = 12.5kΩ	3.6	4	4.4	A
			R_{ILIM} = 10kΩ	4.5	5	5.5	A
			R_{ILIM} = GND, open, or out of range(<9kΩ, and >100kΩ)		0.5	0.8	A
I_{CL}	Current Limit level	Device Version B, D Short circuit condition	R_{ILIM} = 50kΩ	1.85	2	2.15	A
			R_{ILIM} = 25kΩ	3.7	4	4.3	A
			R_{ILIM} = 16.7kΩ	5.6	6	6.4	A
			R_{ILIM} = 12.5kΩ	7.2	8	8.6	A
			R_{ILIM} = 10kΩ	9	10	10.7	A
			R_{ILIM} = GND, open, or out of range(<9kΩ, and >100kΩ)	0.2	0.5	1	A
I_{CL}	Current Limit level	Device Version E Short circuit condition	R_{ILIM} = 50kΩ	1.7	2	2.3	A
			R_{ILIM} = 25kΩ	3.6	4	4.4	A
			R_{ILIM} = 16.7kΩ	5.4	6	6.6	A
			R_{ILIM} = 12.5kΩ	7.1	8	8.9	A
			R_{ILIM} = 10kΩ	8.8	10	11.2	A
			R_{ILIM} = GND, open, or out of range(<9kΩ, and >100kΩ)	0.3	0.5	0.8	A
I_{CL_LINPK}	Overcurrent Limit Threshold[(1)]	Overload condition	R_{ILIM} = 10kΩ to 50kΩ			1.3x I_{CL}	A
I_{ILIM_ENPS}	Peak current enabling into permanent short		R_{ILIM} = 10kΩ			2x I_{CL}	A
I_{ILIM_ENPS2}	Peak current enabling into permanent short		R_{ILIM} = 10kΩ, t < $I_{LIM_STARTUP_DELAY}$			$I_{LIM_STARTUP}$	A
V_{ILIM_OVP}	I_{LIM} Switchover threshold during overvoltage		Rising	37	40	43	V
			Hysteresis		2		V
I_{ILIM_OVP}	I_{LIM} Current Limit threshold during overvoltage	Overload condition	R_{ILIM} = X, $V_{VS} \geq V_{ILIM_OVP}$	0	0.552	1.5	A
t_{IOS}	Short circuit response time	VS = 24V			0.5		µs
$I_{ILIM_OVERVOLTAGE}$	I_{LIM} Current Limitation threshold during overvoltage	Overload condition when VS > 36V[(1)]	R_{ILIM} = X, 48V ≥ V_{VS} ≥ 36V			5.25	A
THERMAL SHUTDOWN CHARACTERISTICS							
T_{ABS}	Thermal shutdown			175	185	195	°C
T_{REL}	Relative thermal shutdown				77		°C
t_{RETRY}	Retry time	Time from fault shutdown until switch re-enable (thermal shutdown).		1.4	2.1	3	ms
Fault Response	Fault reponse to Thermal Shutdown				Auto-retry		
T_{HYS}	Absolute Thermal shutdown hysteresis				10		°C

6.5 Electrical Characteristics (continued)

V_S = 6V to 36 V, T_A= –40°C to 125°C (unless otherwise noted)

PARAMETER		TEST CONDITIONS		MIN	TYP	MAX	UNIT
FAULT PIN CHARACTERISTICS							
$I_{CL_FAULT_R}$ (2)	I_{CL} Current Limit Fault Assertion Threshold (Ver. A, B, C, D)	V_{DIAG_EN} = 5V, V_{OL_ON} = 0V	Rising	0.90xI_{CL}	0.95xI_{CL}		A
	I_{CL} Current Limit Fault Assertion Threshold (Ver. E)	V_{DIAG_EN} = 5V, V_{OL_ON} = 0V	Rising	0.77xI_{CL}	0.92xI_{CL}		A
$I_{CL_FAULT_F}$ (2)	I_{CL} Fault De-Assertion Threshold (Ver. A, B, C, D)	V_{DIAG_EN} = 5V, V_{OL_ON} = 0V	Falling	0.85xI_{CL}	0.90xI_{CL}		A
	I_{CL} Fault De-Assertion Threshold (Ver. E)	V_{DIAG_EN} = 5V, V_{OL_ON} = 0V	Falling	0.72xI_{CL}	0.86xI_{CL}		A
V_{FAULT}	$\overline{FAULT}$ low output voltage	$I_{\overline{FAULT}}$ = 2.5mA				0.5	V
$t_{FAULT_BLANKING}$	Fault blanking time during startup		V_{DIAG_EN} = 5V, V_{EN} = 0 to 5V			12	ms
t_{FAULT_FLT}	Fault indication-time	Time between fault and $\overline{FAULT}$ asserting				75	µs
t_{FAULT_SNS}	Fault indication-time (Ver. A, B, C, D)	V_{DIAG_EN} = 5V Time between fault and I_{SNS} settling at V_{SNSFH}	V_{DIAG_EN} = 5V Time between fault and I_{SNS} settling at V_{SNSFH}			95	µs
	Fault indication-time (Ver. E)	V_{DIAG_EN} = 5V Time between fault and I_{SNS} settling at V_{SNSFH}	V_{DIAG_EN} = 5V Time between fault and I_{SNS} settling at V_{SNSFH}			98	µs
CURRENT SENSE CHARACTERISTICS							
I_{KSNS2_EN}	Load current supported to enable KSNS2 when in KSNS1 Mode (Ver. A, B, C, D)	V_{EN} = V_{DIAG_EN} = 5V, V_{OL_ON} = GND		42	50	70	mA
	Load current supported to enable KSNS2 when in KSNS1 Mode (Ver. E)	V_{EN} = V_{DIAG_EN} = 5V, V_{OL_ON} = GND		39	50	70	mA
I_{KSNS2_DIS}	Load current to disable KSNS2 when in KSNS2 Mode (Ver. A, B, C, D)	V_{EN} = V_{DIAG_EN} = 5V, V_{OL_ON} = GND		75	85	105	mA
	Load current to disable KSNS2 when in KSNS2 Mode (Ver. E)	V_{EN} = V_{DIAG_EN} = 5V, V_{OL_ON} = GND		74	85	96	mA
K_{SNS}	Current sense ratio - Standard Sensing I_{OUT} / I_{SNS}	I_{OUT} = 2A, V_{OL_ON} = GND			1300		A/A
K_{SNS2}	Current sense ratio - High Accuracy Sensing I_{OUT} / I_{SNS}	I_{OUT} = 30mA, V_{OL_ON} = 5V			24.6		A/A

Copyright © 2026 Texas Instruments Incorporated

6.5 Electrical Characteristics (continued)

V_S = 6V to 36 V, T_A= –40°C to 125°C (unless otherwise noted)

PARAMETER		TEST CONDITIONS		MIN	TYP	MAX	UNIT
I_{SNS}	Current sense current and accuracy	V_{EN} = V_{DIAG_EN} = 5V, V_{OL_ON} = GND	I_{OUT} = 7A		5.38		mA
				-6		6	%
			I_{OUT} = 6A		4.61		mA
				-6		6	%
			I_{OUT} = 4A		3.0		mA
				–4		4	%
			I_{OUT} = 2A		1.533		mA
				–4		4	%
			I_{OUT} = 1A		0.764		mA
				–4		4	%
			I_{OUT} = 500mA		0.380		mA
				-6		6	%
			I_{OUT} = 200mA		0.150		mA
				-10		10	%
			I_{OUT} = 100mA		0.073		mA
				-15		15	%
			I_{OUT} = 50mA		0.034		mA
				-25		25	%
I_{SNS2}	Current sense current and accuracy for high accuracy sense mode	V_{EN} = V_{DIAG_EN} = 5V, V_{OL_ON} = 5V	I_{OUT} = 40mA		1.62		mA
				-6		6	%
			I_{OUT} = 20mA		0.833		mA
				-6		6	%
			I_{OUT} = 10mA		0.404		mA
				-10		10	%
			I_{OUT} = 4mA		0.161		mA
				-12.5		12.5	%
			I_{OUT} = 2mA		0.0800		mA
				-15		15	%
			I_{OUT} = 1mA		0.0395		mA
				-20		20	%
SNS PIN CHARACTERISTICS							
V_{SNSFH}	V_{SNS} fault high-level	V_{DIAG_EN} = 5V		4.5	5	5.77	V
		V_{DIAG_EN} = 3.3V, R_{SNS}=Open		3.5	3.95	4.4	V
		V_{DIAG_EN} = V_{IH}		2.8	3.66	3.8	V
I_{SNSFLT}	I_{SNS} fault high-level	V_{DIAG_EN} > $V_{IH,DIAG_EN}$		5.8	6.4		mA
I_{SNSFLT}	I_{SNS} fault high-level (Ver. E)	V_{DIAG_EN} > $V_{IH,DIAG_EN}$	V_{DIAG_EN} > $V_{IH,DIAG_EN}$	5.3	6.4		mA
$I_{SNSleak}$	I_{SNS} leakage	V_{DIAG_EN} = 5V, IL = 0mA				1.3	µA
V_{S_ISNS}	V_S headroom needed for full current sense and fault functionality (Ver. A, B, C, D)	V_{DIAG_EN} = 3.3V		5.8			V
	V_S headroom needed for full current sense and fault functionality	V_{DIAG_EN} = 5V		6.5			V

6.5 Electrical Characteristics (continued)

V_S = 6V to 36 V, T_A= –40°C to 125°C (unless otherwise noted)

PARAMETER		TEST CONDITIONS	MIN	TYP	MAX	UNIT
V_{S_ISNS}	V_S headroom needed for full current sense and fault functionality (Ver. E)	V_{DIAG_EN} = 3.3V	6			V
OPEN LOAD DETECTION CHARACTERISTICS						
V_{OL_OFF}	OFF state open-load (OL) detection voltage	V_{EN} = 0V, V_{DIAG_EN} = 5V	1.5	2	2.5	V
R_{OL_OFF}	OFF state open-load (OL) detection internal pull-up resistor	V_{EN} = 0V, V_{DIAG_EN} = 5V	120	150	180	kΩ
t_{OL_OFF}	OFF state open-load (OL) detection deglitch time	V_{EN} = 0V, V_{DIAG_EN} = 5V, When Vs – V_{OUT} < V_{OL}, duration longer than t_{OL}. Open load detected.		480	700	µs
$t_{OL_OFF_1}$	OL_OFF and STB indication-time from EN falling	V_{EN} = 5V to 0V, V_{DIAG_EN} = 5V I_{OUT} = 0mA, V_{OUT} = Vs - V_{OL}		310	700	µs
$t_{OL_OFF_2}$	OL and STB indication-time from DIA_EN rising	V_{EN} = 0V, V_{DIAG_EN} = 0V to 5V I_{OUT} = 0mA, V_{OUT} = V_S - V_{OL}			700	µs
OL_ON PIN CHARACTERISTICS						
V_{IL, OL_ON}	Input voltage low-level				0.8	V
V_{IH, OL_ON}	Input voltage high-level		1.5			V
V_{IHYS, OL_ON}	Input voltage hysteresis			282		mV
R_{OL_ON}	Internal pulldown resistor		0.7	1	1.3	MΩ
$I_{IL_OL_ON}$	Input current low-level	V_{OL_ON} = -1V	–25		0	µA
I_{IL, OL_ON}	Input current low-level	V_{OL_ON} = 0.8V	0.6	0.8	1.2	µA
I_{IH, OL_ON}	Input current high-level	V_{OL_ON} = 5V	3	5	7	µA
DIAG_EN PIN CHARACTERISTICS						
$V_{IL, DIAG_EN}$	Input voltage low-level	No GND Network			0.8	V
$V_{IH, DIAG_EN}$	Input voltage high-level	No GND Network	1.5			V
$V_{IHYS, DIAG_EN}$	Input voltage hysteresis			270		mV
R_{DIAG_EN}	Internal pulldown resistor		200	350	500	kΩ
$I_{IL, DIAG_EN}$	Input current low-level (A, B, C, D version)	V_{DIAG_EN} = 0.8V, V_{EN}=0V		0.8		µA
	Input current low-level (E version)	V_{DIAG_EN} = 0.8V, V_{EN}=0V		2.9	3.8	µA
$I_{IH, DIAG_EN}$	Input current high-level	V_{DIAG_EN} = 5V		14		µA
EN PIN CHARACTERISTICS						
$V_{IL, EN}$	Input voltage low-level	No GND Network			0.8	V
$V_{IH, EN}$	Input voltage high-level	No GND Network	1.5			V
$V_{IHYS, EN}$	Input voltage hysteresis			280		mV
R_{EN}	Internal pulldown resistor		200	350	500	kΩ
$I_{IL, EN}$	Input current low-level	V_{EN} = 0.8V		2.2		µA
$I_{IH, EN}$	Input current high-level	V_{EN} = 5V		14		µA

(1) The maximum current output under overload condition before current limit regulation
(2) Not tested in production.

Copyright © 2026 Texas Instruments Incorporated

6.6 SNS Timing Characteristics

V_S = 6V to 36V, T_A = -40°C to 125°C (unless otherwise noted). Parameters not tested in production.

PARAMETER		TEST CONDITIONS	MIN	TYP	MAX	UNIT
SNS TIMING - CURRENT SENSE						
$t_{SNSION1}$	Settling time from rising edge of DIAG_EN 50% of V_{DIAG_EN} to 90% of settled ISNS	V_{EN}= 5V, V_{DIAG_EN} = 0V to 5V, V_{OL_ON} = 0V , R_{SNS} = 1kΩ, I_L = 1A			15	µs
		V_{EN} = 5V, V_{DIAG_EN} = 0V to 5V, V_{OL_ON} = 0V , R_{SNS} = 1kΩ, I_L = 50mA			80	µs
$t_{SNSION2}$	Settling time from rising edge of EN and DIAG_EN 50% of V_{DIAG_EN} V_{EN} to 90% of settled ISNS	V_{EN} = V_{DIAG_EN} = 0V to 5V V_S = 24V R_{SNS} = 1kΩ, I_L = 1A			150	µs
$t_{SNSION3}$	Settling time from rising edge of EN 50% of V_{EN} to 90% of settled ISNS	V_{EN} = 0V to 5V, V_{DIAG_EN} = 5V R_{SNS} = 1kΩ, I_L = 1A			150	µs
$t_{SNSION4}$	Settling time from rising edge of OL_ON 50% of V_{OL_ON} to 90% of settled ISNS	V_{OL_ON} = 0 to 5V, V_{EN} = V_{DIAG_EN} = 5V R_{SNS} = 1kΩ, I_L = 6mA			60	µs
$t_{SNSION5}$	Settling time from falling edge of I_L < I_{KSNS2_EN} to 90% of settled ISNS	V_{OL_ON} = V_{EN} = V_{DIAG_EN} = 5V R_{SNS} = 1kΩ, I_L = 100mA to 10mA			60	µs
$t_{SNSION6}$	Settling time from Rising edge of I_L > $I_{KSNS2_DIS.}$ to 90% of settled ISNS	V_{OL_ON} = V_{EN} = V_{DIAG_EN} = 5V R_{SNS} = 1kΩ, I_L = 10mA to 100mA			60	µs
$t_{KSNS2_DIS_DGL}$	Deglitch time for transition of I_L > $I_{KSNS2_DIS.}$	V_{OL_ON} = V_{EN} = V_{DIAG_EN} = 5V R_{SNS} = 1kΩ, I_L = 10mA to 100mA			30	µs
$t_{SNSIOFF}$	Settling time from falling edge of DIAG_EN	V_{EN} = 5V, V_{DIAG_EN} = 5V to 0V R_{SNS} = 1kΩ, R_L = 48Ω			20	µs
$t_{SETTLEH}$	Settling time from rising edge of load step to 90% of setttled value of current sense output	V_{EN} = V_{DIAG_EN} = 5V R_{SNS} = 1kΩ, I_{OUT} = 0.5A to 3A			20	µs
$t_{SETTLEL}$	Settling time from output edge of load step to 10% of setttled value of current sense output	V_{EN} = V_{DIAG_EN} = 5V R_{SNS} = 1kΩ, I_{OUT} = 3A to 0.5A			20	µs
$t_{TIMEOUT}$	Time to indicate VSNSFH due to VS-VOUT>2V. From rising edge of EN, DIAG_EN and OL_ON 50% of V_{DIA_EN} V_{EN} $V_{OL_ON}$to 50% of rising edge of VSNSFH	V_{DIAG_EN} = V_{EN} = V_{OL_ON} = 0V to 5V R_{SNS} = 1kΩ, I_{OUT} = 5mA C_{OUT} =50uF		245		µs

6.7 Switching Characteristics

V_S = 24V, T_J = -40°C to +125°C (unless otherwise noted), C_{OUT} = 22nF

Parameter		Test Conditions	Min	Typ	Max	Unit
t_{DR}	Turnon delay time (from standby, Ver. A, B, C, D)	V_S = 24V, R_L = 48Ω 50% of EN to 20% of VOUT		35	55	µs
	Turnon delay time (from delay or diagnostic, Ver. A, B, C, D)	V_S = 24V, R_L = 48Ω 50% of EN to 20% of VOUT		25	45	µs
	Turnon delay time (from delay or diagnostic, Ver. E)	V_S = 24V, R_L = 48Ω 50% of EN to 20% of VOUT		49	60	µs
t_{DF}	Turnoff delay time (Ver. A, B, C, D)	V_S = 24V, R_L = 48Ω 50% of EN to 80% of VOUT		35	50	µs
	Turnoff delay time (Ver. E)	V_S = 24V, R_L = 48Ω 50% of EN to 80% of VOUT		40	55	µs

Copyright © 2026 Texas Instruments Incorporated

6.7 Switching Characteristics (continued)

V_S = 24V, T_J = -40°C to +125°C (unless otherwise noted), C_{OUT} = 22nF

Parameter		Test Conditions	Min	Typ	Max	Unit
SR_R	VOUT rising slew rate	V_S = 24V, 20% to 80% of V_{OUT}, R_L = 48Ω	0.4	0.7	0.95	V/µs
SR_F	VOUT falling slew rate	V_S = 24V, 80% to 20% of V_{OUT}, R_L = 48Ω	0.4	0.8	1.2	V/µs
f_{max}	Maximum PWM frequency				1	kHz
t_{ON}	Turnon time (Ver. A, B, C, D)	V_S = 24V, R_L = 48Ω 50% of EN to 80% of VOUT		55	75	µs
	Turnon time (Ver. E)	V_S = 24V, R_L = 48Ω 50% of EN to 80% of VOUT		69	96	µs
t_{OFF}	Turnoff time (Ver. A, B, C, D)	V_S = 24V, R_L = 48Ω 50% of EN to 20% of VOUT		60	70	µs
	Turnoff time (Ver. E)	V_S = 24V, R_L = 48Ω 50% of EN to 20% of VOUT		60	80	µs
t_{ON} - t_{OFF}	Turnon and off matching (Ver. A, B, C, D)	1ms ON time switch enable pulse Vs = 24V, R_L = 48Ω	–25		45	µs
	Turnon and off matching (Ver. E)	100µs ON time switch enable pulse, V_S = 24V, R_L = 48Ω, F = f_{max}	5		68	µs
Δ_{PWM}	PWM accuracy - average load current	200µs enable pulse, V_S = 24V, R_L = 48Ω F = f_{max}	-15		15	%
E_{ON}	Switching energy losses during turnon	V_S = 24V, R_L = 8Ω, 1ms pulse, VOUT from 20% to 80% of VS voltage		0.5		mJ
E_{OFF}	Switching energy losses during turnoff	V_S = 24V, R_L = 8Ω, 1ms pulse, VOUT from 80% to 20% of VS voltage		0.25		mJ

Copyright © 2026 Texas Instruments Incorporated

6.8 Typical Characteristics

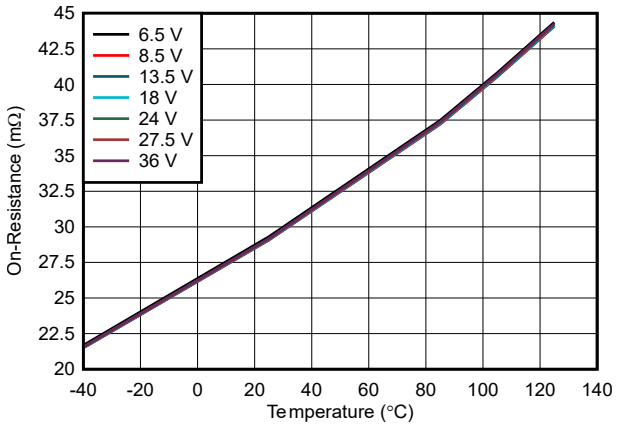

I_{OUT}= 0.2A

Figure 6-1. On-Resistance (R_{ON}) vs Temperature vs VS Supply Voltage

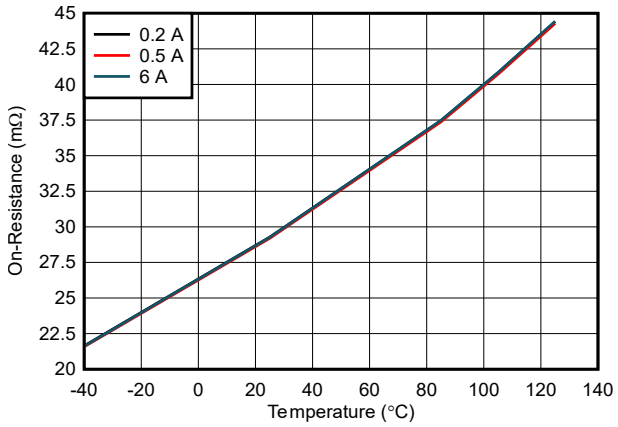

VS = 24V

Figure 6-2. On-Resistance (R_{ON}) vs Temperature vs Load Current

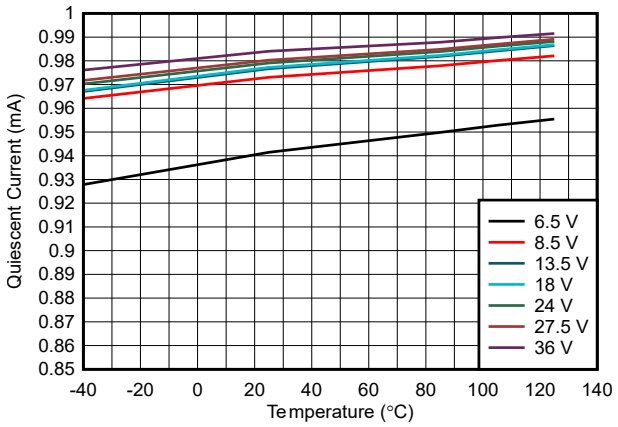

V_{EN} = 5V V_{DIAG_EN} = 0V

Figure 6-3. Quiescent Current ($I_{Q,\ VS}$) From VS Input Supply vs Temperature vs VS Voltage

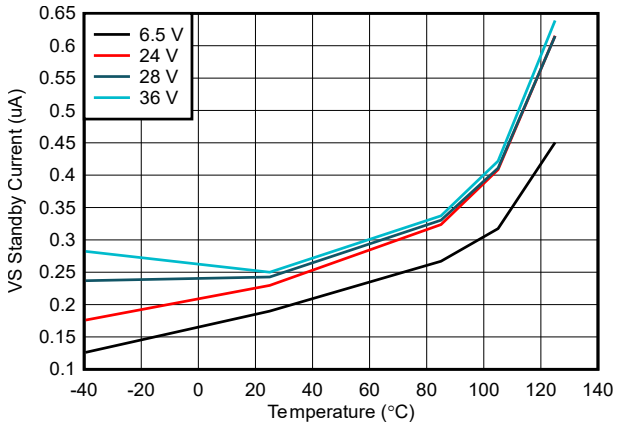

V_{EN} = 0V V_{DIAG_EN} = 0V Version A, B, C, D

Figure 6-4. Standby Current ($I_{STBY,\ VS}$) From VS Input Supply vs Temperature vs VS Voltage

6.8 Typical Characteristics (continued)

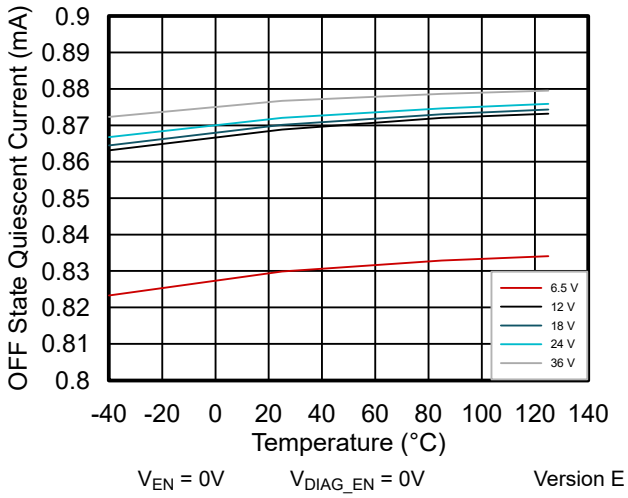

Figure 6-5. OFF State Quiescent Current ($I_{Q(OFF)}$) From VS Input Supply vs Temperature vs VS Voltage

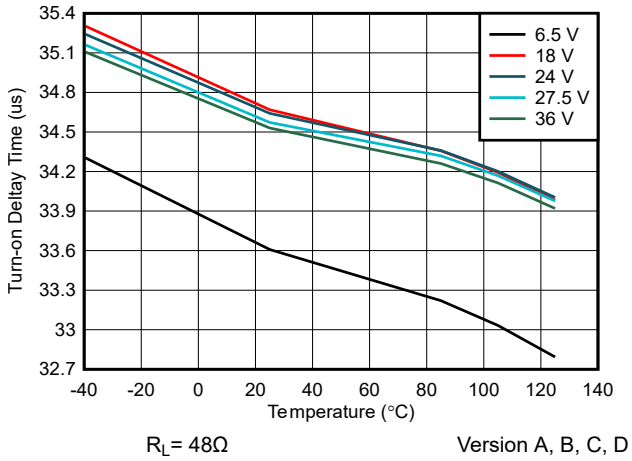

Figure 6-6. Turn-on Delay Time (t_{DR}) vs Temperature vs VS Voltage

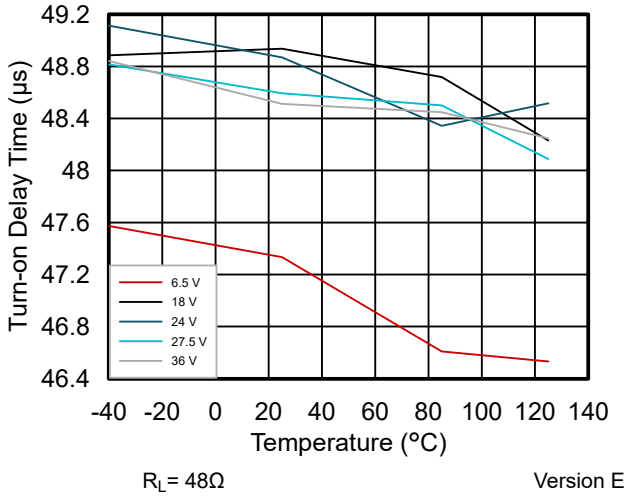

Figure 6-7. Turn-on Delay Time (t_{DR}) vs Temperature vs VS Voltage

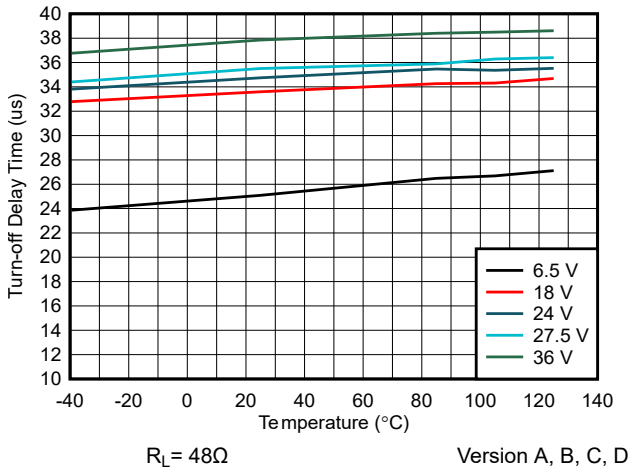

Figure 6-8. Turn-off Delay Time (t_{DF}) vs Temperature vs VS Voltage

Copyright © 2026 Texas Instruments Incorporated

6.8 Typical Characteristics (continued)

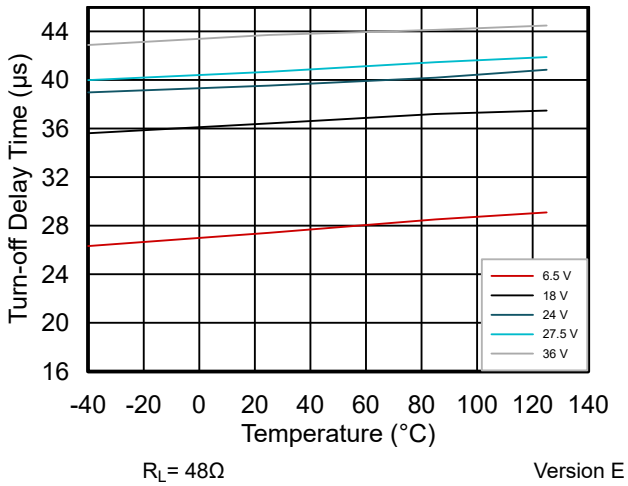

Figure 6-9. Turn-off Delay Time (t_{DF}) vs Temperature vs VS Voltage

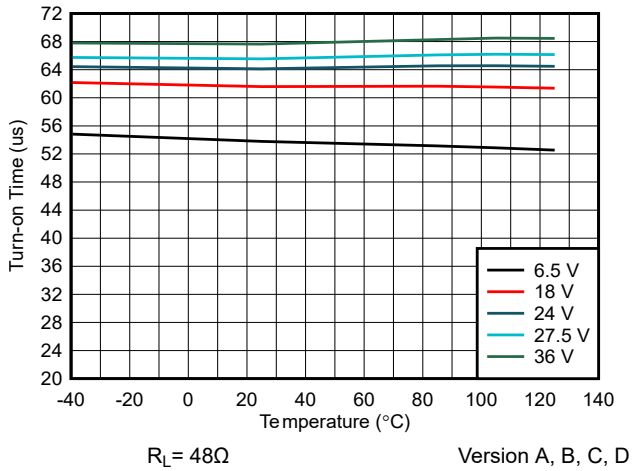

Figure 6-10. Turn-on Time (t_{ON}) vs Temperature vs VS Voltage

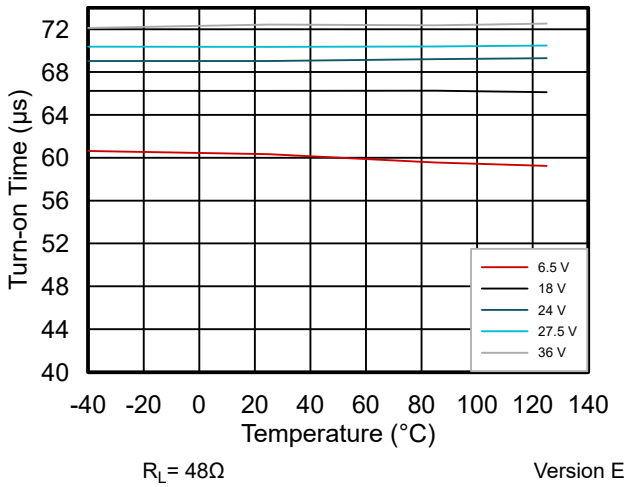

Figure 6-11. Turn-on Time (t_{ON}) vs Temperature vs VS Voltage

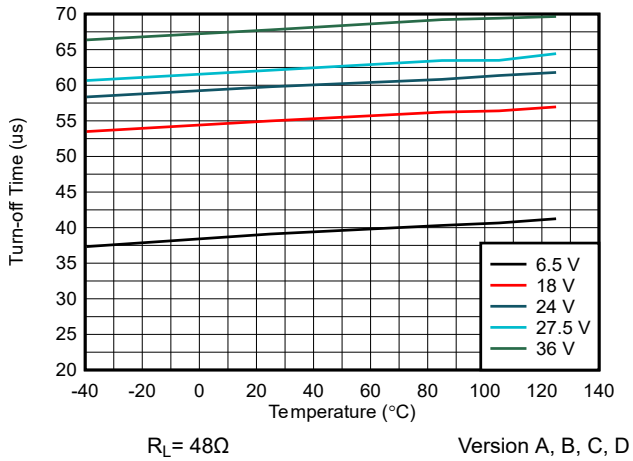

Figure 6-12. Turn-off Time (t_{OFF}) vs Temperature vs VS Voltage

6.8 Typical Characteristics (continued)

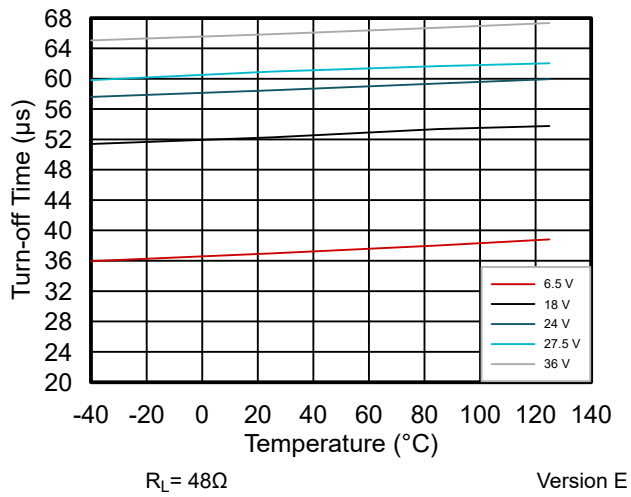

Figure 6-13. Turn-off Time (t_{OFF}) vs Temperature vs VS Voltage

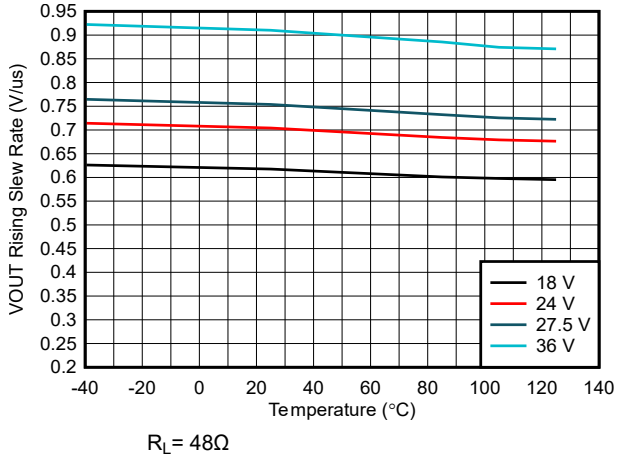

Figure 6-14. VOUT Rising Slew Rate (SR_R) vs Temperature vs VS Voltage

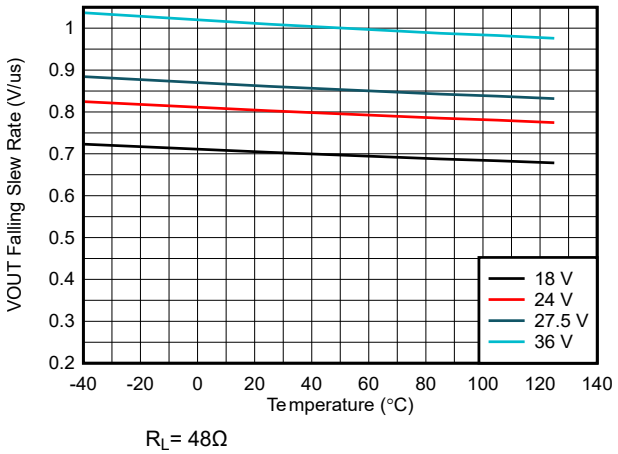

Figure 6-15. VOUT Falling Slew Rate (SR_F) vs Temperature vs VS Voltage

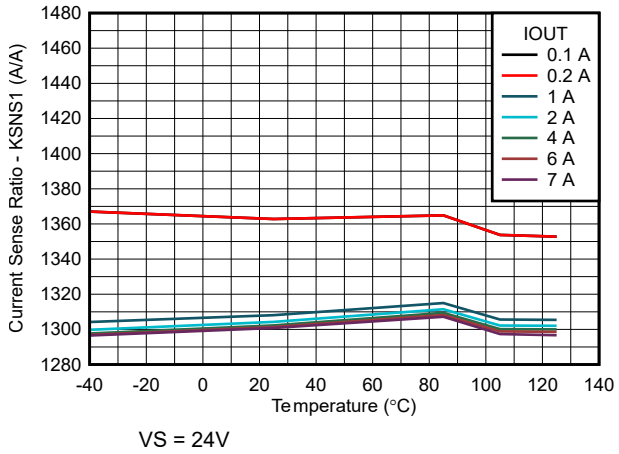

Figure 6-16. Current Sense Ratio ($KSNS_1$) vs Temperature vs Load Current

Copyright © 2026 Texas Instruments Incorporated

6.8 Typical Characteristics (continued)

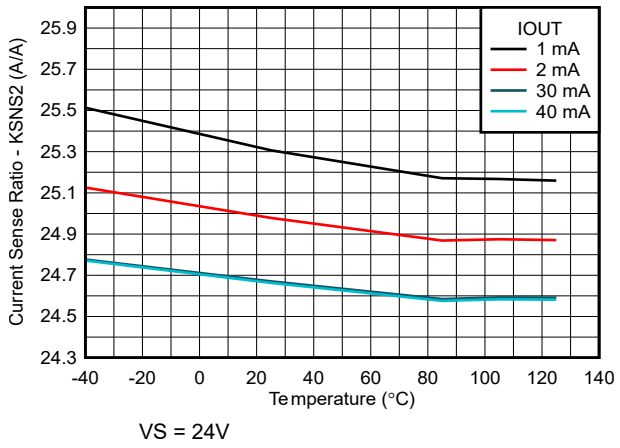

Figure 6-17. Current Sense Ratio ($KSNS_2$) vs Temperature vs Load Current

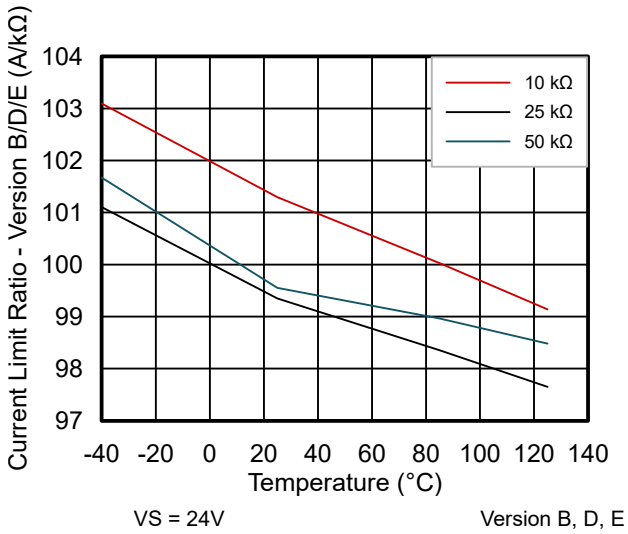

Figure 6-18. Current Limit Ratio (K_{CL}) vs Temperature vs R_{ILIM}

7 Parameter Measurement Information

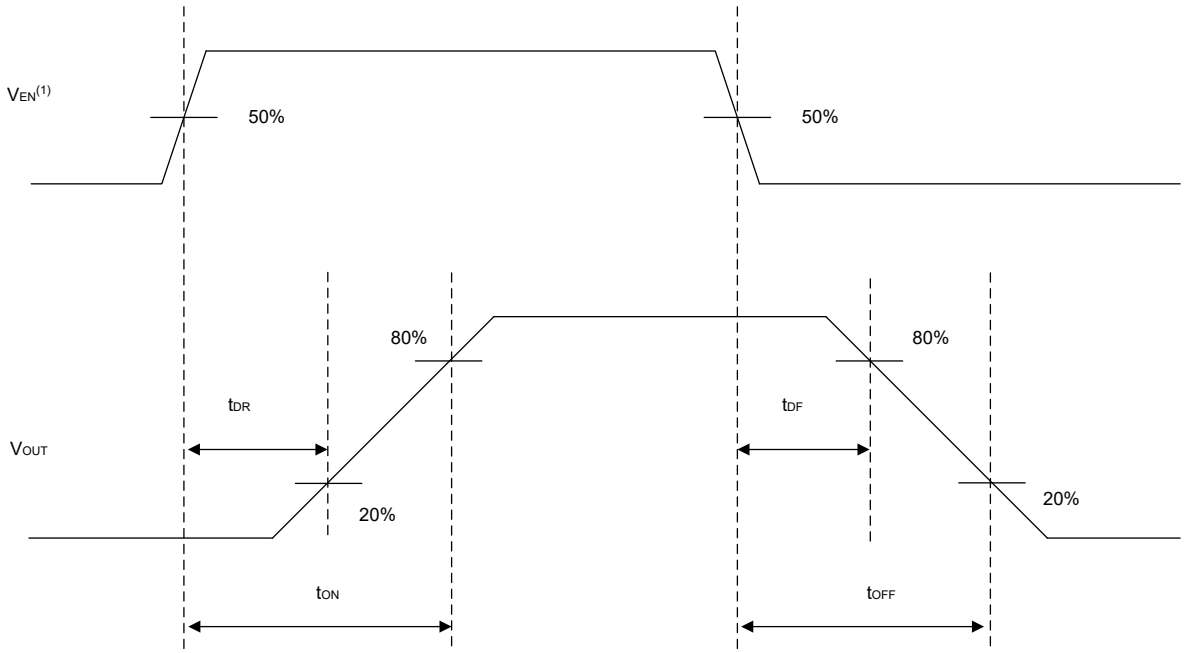

Rise and fall time of V_{EN} is 100ns.

Figure 7-1. Switching Characteristics Definitions

Copyright © 2026 Texas Instruments Incorporated

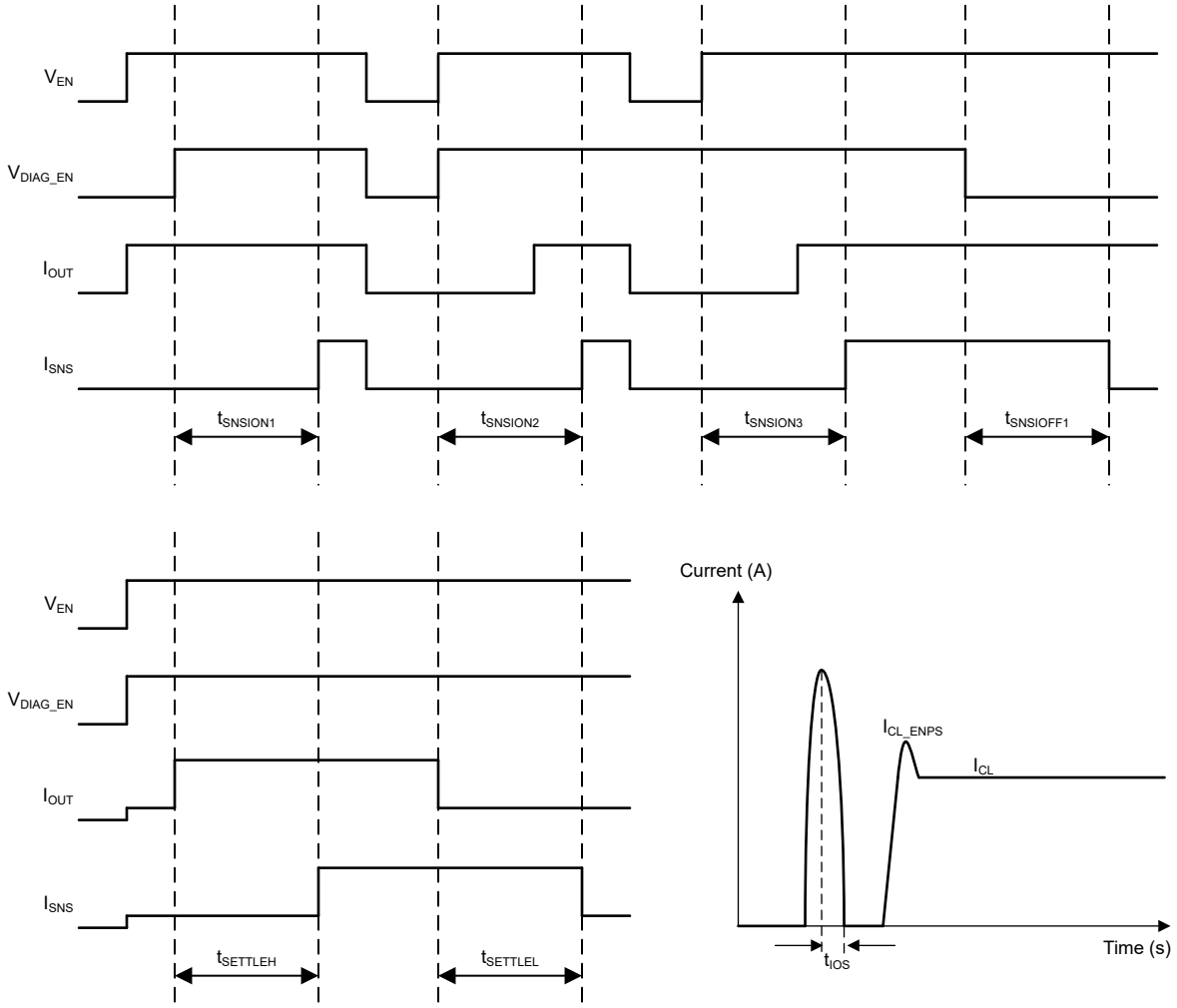

Rise and fall times of control signals are 100ns. Control signals include: EN, DIAG_EN.

Figure 7-2. SNS Timing Characteristics Definitions

8 Detailed Description

8.1 Overview

The TPS281C30 is a single-channel, fully-protected, high-side power switch with an integrated NMOS power FET and charge pump rated to 60V DC tolerance. Full diagnostics and high-accuracy current-sense features enable intelligent control of the load. Low logic high threshold, V_{IH}, of 1.5V on the input pins allow use of MCUs down to 1.8V. A programmable current-limit function greatly improves the reliability of the whole system. The device diagnostic reporting has two pins to support both digital status and analog current-sense output.

The digital status report is implemented with an open-drain structure on the fault pin. When a fault condition occurs, the pin is pulled down to GND. An external pullup is required to match the microcontroller supply level. High-accuracy current sensing allows a better real-time monitoring effect and more-accurate diagnostics without further calibration. A current mirror is used to source 1 / K_{SNS} of the load current, which is reflected as voltage on the SNS pin. K_{SNS} is a constant value across temperature and supply voltage. The SNS pin can also report a fault by forcing a voltage of V_{SNSFH} that scales with the diagnostic enable voltage so that the maximum voltage seen by the ADC of the system is within an acceptable value. This removes the need for an external zener diode or resistor divider on the SNS pin.

The external high-accuracy current limit allows setting the current limit value by application. It highly improves the reliability of the system by clamping the inrush current effectively under start-up or short-circuit conditions. Also, it can save system costs by reducing PCB trace, connector size, and the preceding power-stage capacity. An internal current limit can also be implemented in this device. The lower value of the external or internal current-limit value is applied.

An active drain to source voltage clamp is built in to address switching off the energy of inductive loads, such as relays, solenoids, pumps, motors, and so forth. During the inductive switching-off cycle, both the energy of the power supply (E_{BAT}) and the load (E_{LOAD}) are dissipated on the high-side power switch itself. With the benefits of process technology and excellent IC layout, the TPS281C30x device can achieve excellent energy dissipation capacity, which can help save the external free-wheeling circuitry in most cases.

The TPS281C30x device can be used as a high-side power switch for a wide variety of resistive, inductive, and capacitive loads, including the low-wattage bulbs, LEDs, relays, solenoids, and heaters. Please note that for driving inductive loads, versions without internal VDS clamp (versions C, D, E) would require an external clamp to dissipate the inductive energy at turn-off.

Copyright © 2026 Texas Instruments Incorporated

8.2 Functional Block Diagram

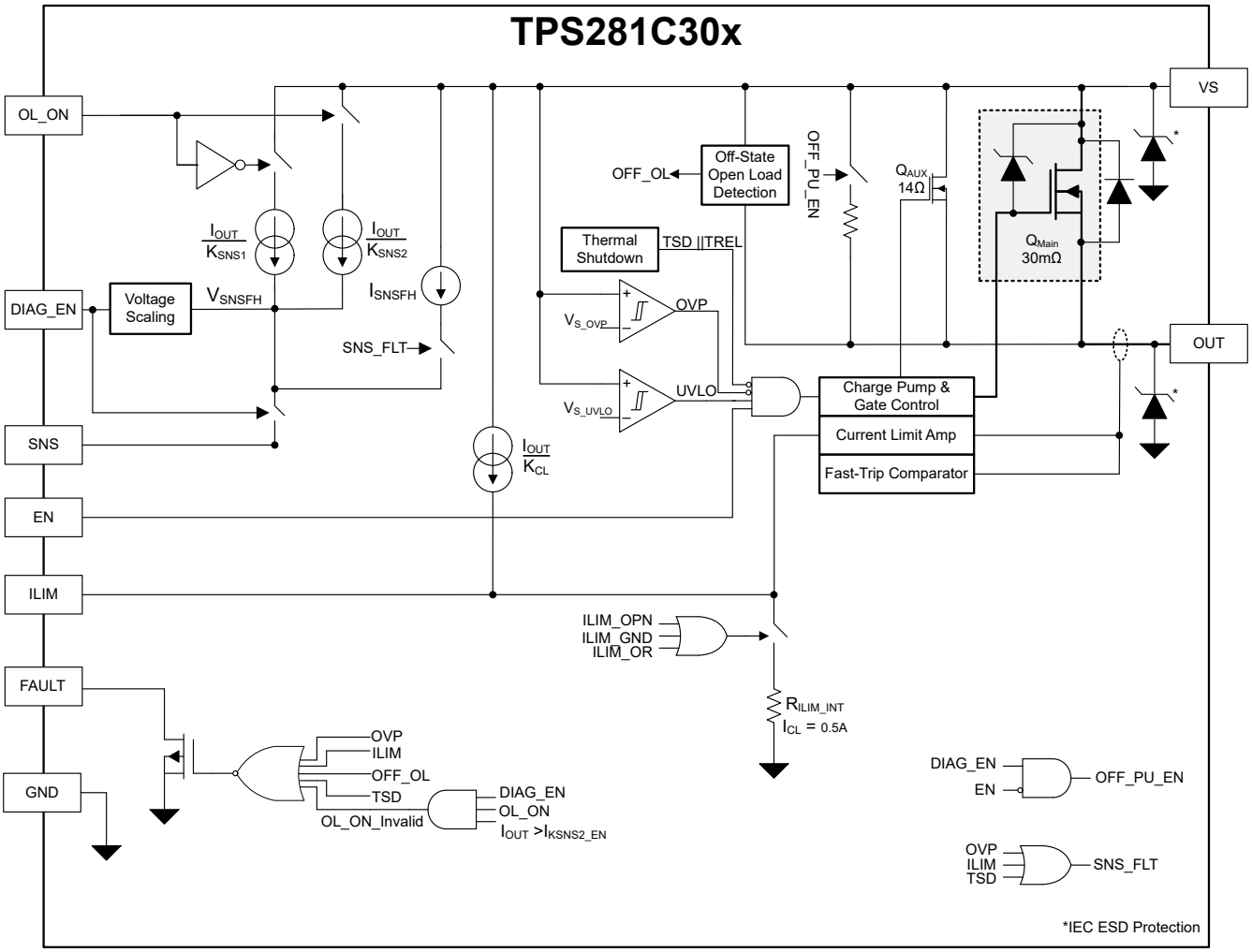

8.3 Device Functional Modes

8.3.1 Working Mode

The four working modes in the device are normal mode, normal mode with diagnostics, standby mode, and standby mode with diagnostics. The standby mode and the standby mode with diagnostics are only available in version A, B, C, D. If an off-state power saving is required in the system, the standby current is less than 500nA with EN and DIAG_EN low. If an off-state diagnostic is required in the system, the typical standby current is around 0.5mA with DIAG_EN high. Note that to enter standby mode requires IN low and t > t_{STBY}. t_{STBY} is the standby-mode deglitch time, which is used to avoid false triggering or interfere with PWM switching.

For E version, there is no standby mode when the device is OFF, and the current consumption is $I_{Q(OFF)}$ when EN is low.

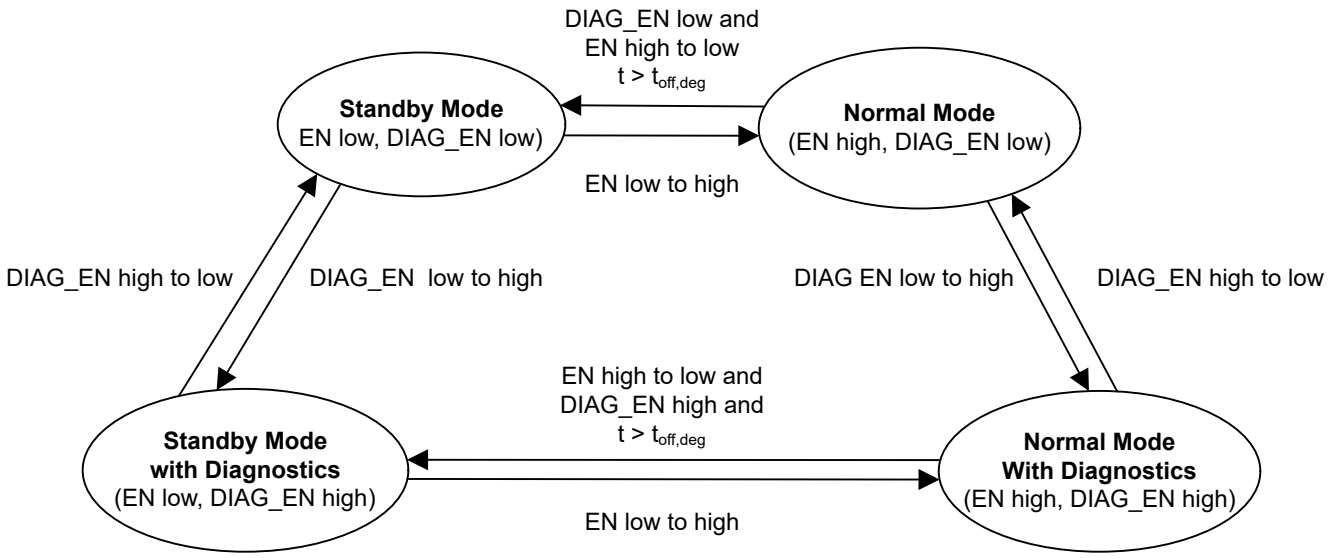

Figure 8-1. Work-Mode State Machine

8.4 Feature Description

8.4.1 Accurate Current Sense

The current-sense function is internally implemented, which allows a better real-time monitoring effect and more-accurate diagnostics without further calibration. A current mirror is used to source 1 / K_{SNS} of the load current, flowing out to the external resistor between the SNS pin and GND, and reflected as voltage on the SNS pin.

K_{SNS} is the ratio of the output current and the sense current. The accuracy values of K_{SNS} quoted in the electrical characteristics do take into consideration temperature and supply voltage. Each device is internally calibrated while in production, so post-calibration by users is not required in most cases.

The maximum voltage out on the SNS pin is clamped to V_{SNSFH} which is the fault voltage level. To make sure that this voltage is not higher than the system can tolerate, TI has correlated the voltage coming in on the DIAG_EN pin with the maximum voltage out on the SNS pin. If DIAG_EN is between V_{IH} and 3.3V, the maximum output on the SNS pin is approximately 3.3V. However, if the voltage at DIAG_EN is above 3.3V, then the fault SNS voltage, V_{SNSFH}, tracks that voltage up to 5V. This is done because the GPIO voltage output that is powering the diagnostics through DIAG_EN, is close to the maximum acceptable ADC voltage within the same microcontroller. Therefore, the sense resistor value, R_{SNS}, can be selected to maximize the range of currents needed to be measured by the system. Select the R_{SNS} value based on application need. The maximum usable R_{SNS} value is bounded by the ADC minimum acceptable voltage, $V_{ADC,min}$, for the smallest load current needed to be measured by the system, $I_{LOAD,min}$. The minimum acceptable R_{SNS} value has to confirm the V_{SNS} voltage is below the V_{SNSFH} value so that the system can determine faults. This difference between the maximum readable current through the SNS pin, $I_{LOAD,max} \times R_{SNS}$, and the V_{SNSFH} is called the headroom voltage, V_{HR}.

Copyright © 2026 Texas Instruments Incorporated

The headroom voltage is determined by the system but is important so that there is a difference between the maximum readable current and a fault condition. Therefore, the minimum RSNS value has to be the V_{SNSFH} minus the V_{HR} times the sense current ratio, K_{SNS} divided by the maximum load current the system must measure, $I_{LOAD,max}$. This boundary equation can be seen in Equation 1.

$$V_{ADC,min} \times K_{SNS} / I_{LOAD,min} \leq R_{SNS} \leq (V_{SNSFH} - V_{HR}) \times K_{SNS} / I_{LOAD,max} \quad (1)$$

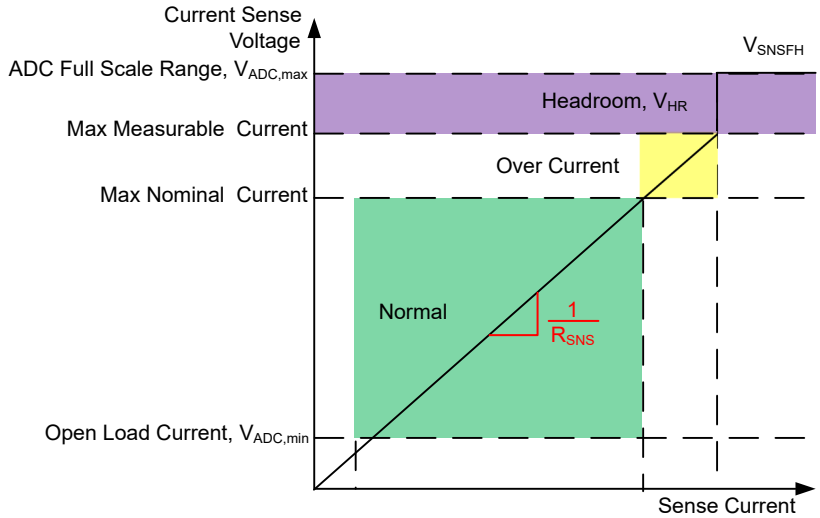

Figure 8-2. Voltage Indication on the Current-Sense Pin

The maximum current the system wants to read, $I_{LOAD,max}$, must be below the current limit threshold because once the current limit threshold is tripped the V_{SNS} value goes to V_{SNSFH}. Additionally, currents being measured must be below 7A to establish that the current sense output is not saturated.

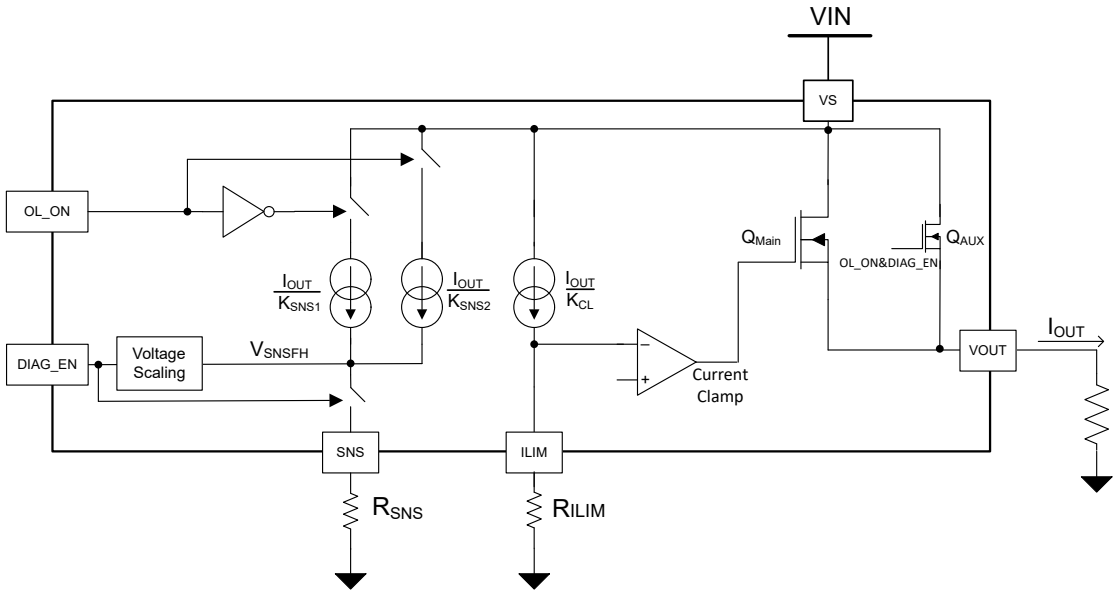

Figure 8-3. Current-Sense and Current-Limit Block Diagram

Since this scheme adapts based on the voltage coming in from the MCU. There is no need to have a zener diode on the SNS pin to protect from high voltages.

8.4.1.1 High Accuracy Sense Mode

In some applications, having accurate current sensing at lower load currents can be critical to distinguish between a real load and a fault scenario such as an open load condition(Wire-Break). To address this challenge, TPS281C30x implements a high accuracy sense mode that enables customers to achieve ±30% at 6mA load. This mode is activated when diagnostics are enabled (DIAG_EN = HI), OL_ON = HI and $I_{Load}<I_{Ksns2_EN}$. To achieve this high accuracy, the device increases its main path resistance to improve its sense accuracy while high accuracy sensing is active. TI recommends users to disable this accuracy sense mode by setting OL_ON = LO if the load starts to increase beyond 40mA. This proactively prevents any higher power dissipation states.

There are other scenarios, such as a sudden load step where the system is not be fast enough to react to the change in SNS output current. For this case, to prevent a high-power dissipation state given by the increased resistance. TPS281C30x senses the load flowing through the VS-VOUT path to remain < I_{Ksns2_DIS}. If the load increases beyond I_{KSNS2_DIS} the FET resistance reverts to its lowest resistance and high accuracy sense mode is disabled. This results in nFAULT being asserted to signal that high-accuracy sense mode has been disabled. This verifies the lowest power dissipation when higher loads are being driven. In addition to this, the user can PWM the OL_ON pin to disable the high resistance mode and minimize power losses further.

However, even if accuracy is achieved by the device; depending on the current sense ratio, system ADCs can struggle to measure lower load currents accurately due to the low voltages that would need to be read by the ADC. As an example, a 6mA I_{Load} is represented as approximately 5mV using RSNS = 1kΩ with a current sense ratio of 1200. For a 10-bit 5V-ADC the 5mV output is just over 1LSB(4.88mV). This does not provide enough margin to accurately measure this current for the ADC and likely a higher resolution must be used.

Therefore, to enable lower ADC resolution requirements and to accurately sense low load currents when operating in high accuracy sense mode, TPS281C30x decreases its current sense ratio to 24. With a sense ratio of 24, the 6mA I_{Load} is represented as 250mV using RSNS = 1kΩ when operating in high accuracy sense mode. This equals to 51LSBs of margin for the same 10-bit ADC or even for an 8-bit ADC the output would still provide >12LSBs of headroom.

Full Protection and Diagnostics for full device states.

Table 8-1. Current Sensing Operation Modes

Conditions	EN	VOUT	OL_ON	KSNS	SNS	$\overline{FAULT}$	Behavior	Recovery
Normal Standard Sensing	L	L	L	1200	0	Hi-Z	Normal	
	H	H	L	1200	I_{Load} / K_{sns1}	Hi-Z	Normal	
High Accuracy Sense Normal Operation	H	H	H	24	I_{Load} / K_{sns2}	Hi-Z	Enables x50 sense ratio for high accuracy sensing and FAULT stays Hi-Z since valid condition is met $I_{Load}<I_{Ksns2_EN}$.	
High Accuracy Sense Invalid Range	H	H	H	1200	I_{Load} / K_{sns1}	L	FAULT is asserted signaling that high accuracy sensing is not enabled since $I_{Load}>I_{Ksns2_DIS}$	Clears when load falls below IKSNS2_EN or OL_ON is reset to LO.

Copyright © 2026 Texas Instruments Incorporated

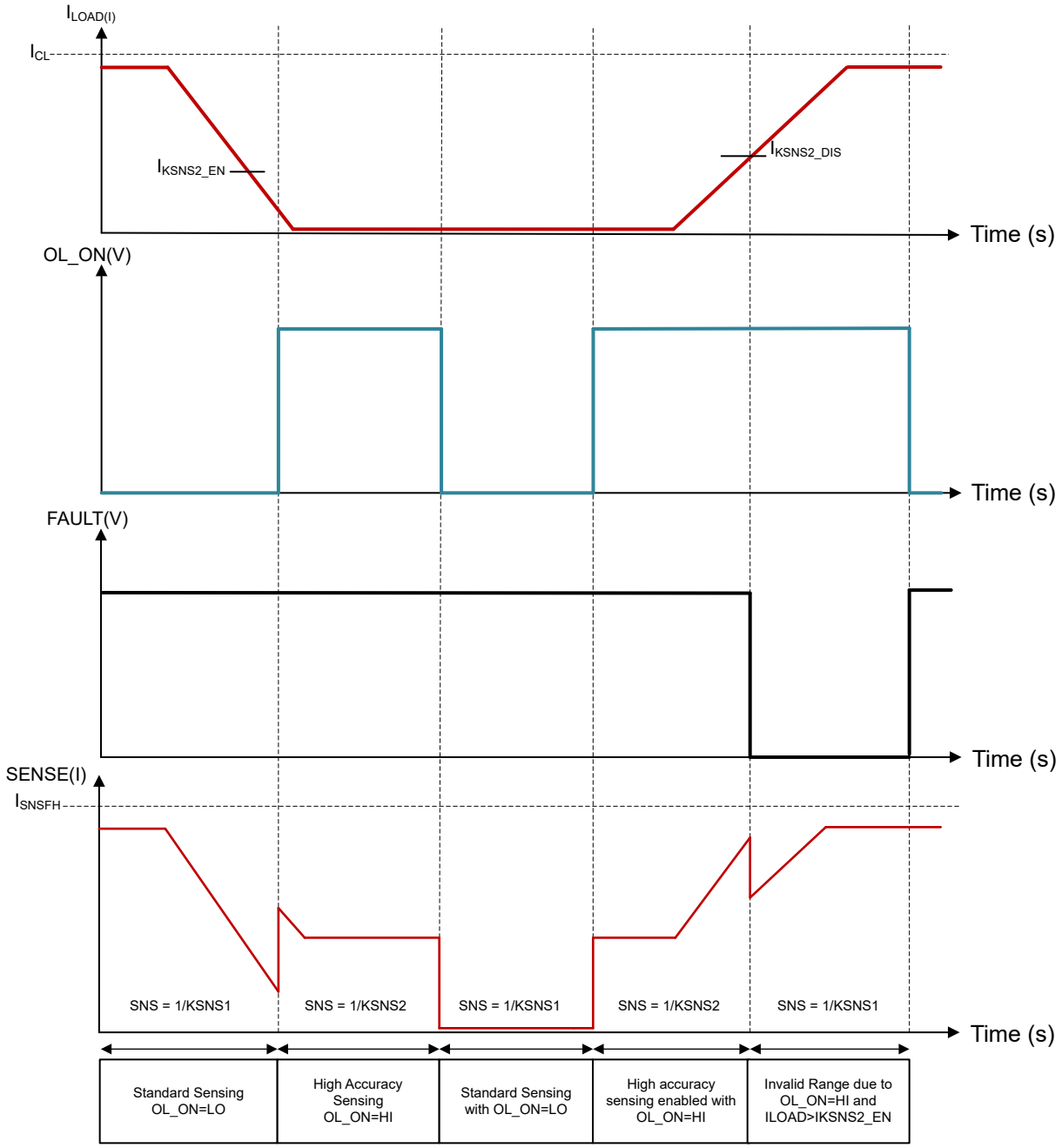

Figure 8-4. High Accuracy Sensing FAULT Indication

8.4.2 Programmable Current Limit

A high-accuracy current limit allows higher reliability, which protects the power supply during short circuit or power up. Also, it can save system costs by reducing PCB traces, connector size, and the capacity of the preceding power stage.

Current limit offers protection from overstressing to the load and integrated power FET. Current limit holds the current at the set value, and pulls up the SNS pin to V_{SNSFH} and asserts the $\overline{FAULT}$ pin as diagnostic reports. The two current-limit thresholds are:

- External programmable current limit: An external resistor, R_{ILIM} is used to set the channel current limit. When the current through the device exceeds I_{CL} (current limit threshold), a closed loop steps in immediately. V_{GS} voltage regulates accordingly, leading to the V_{DS} voltage regulation. When the closed loop is set up, the

current is clamped at the set value. The external programmable current limit provides the capability to set the current-limit value by application.

Additionally this value can be dynamically changed by changing the resistance on the ILIM pin, as seen inSection 9.

- Internal current limit: I_{LIM} pin open or pin shorted to ground. If the external current limit is out of range on the lower end or the I_{LIM} pin is shorted to ground, the internal current limit is fixed and typically 0.5A. This works as a safety power limiting mechanism during failures with shorts or open connections with PCB overstress.

Both the internal current limit ($I_{lim,nom}$) and external programmable current limit are always active when V_S is powered and EN is high. The lower value one (of I_{LIM} and the external programmable current limit) is applied as the actual current limit. The typical deglitch time for the current limit to assert is 2.5µs.

Note that if a GND network is used (which leads to the level shift between the device GND and board GND), the ILIM pin must connect with device GND. Calculate R_{LIM} with Equation 2.

$$R_{ILIM} = K_{CL} / I_{CL} \quad (2)$$

For better protection from a hard short-to-GND condition (when V_S and input are high and a short to GND occurs suddenly), an open-loop fast-response behavior is set to turn off the channel, before the current-limit closed loop is set up. With this fast response, the device can achieve better inrush-suppression performance.

8.4.2.1 Short-Circuit and Overload Protection

TPS281C30 provides output short-circuit protection to establish that the device prevents current flow in the event of a low impedance path to GND, removing the risk of damage or significant supply droop. The device is specified to protect against short-circuit events regardless of the state of the ILIM pins and with up to 36V supply at 125°C.

Figure 8-5 shows the behavior of TPS281C30x when a short-circuit occurs and the device is in the on-state and already outputting current. When the internal pass FET is fully enabled, the current clamping settling time is slower so to establish overshoot is limited, the device implements a fast trip level at a level I_{OVCR}. When this fast trip threshold is hit, the device immediately shuts off for a short period of time before quickly re-enabling and clamping the current to I_{CL} level after a brief transient overshoot to the higher peak current (I_{CL_ENPS}) level. The device will then keep the current clamped at the regulation current limit until the thermal shutdown temperature is hit and the device will safely shut-off.

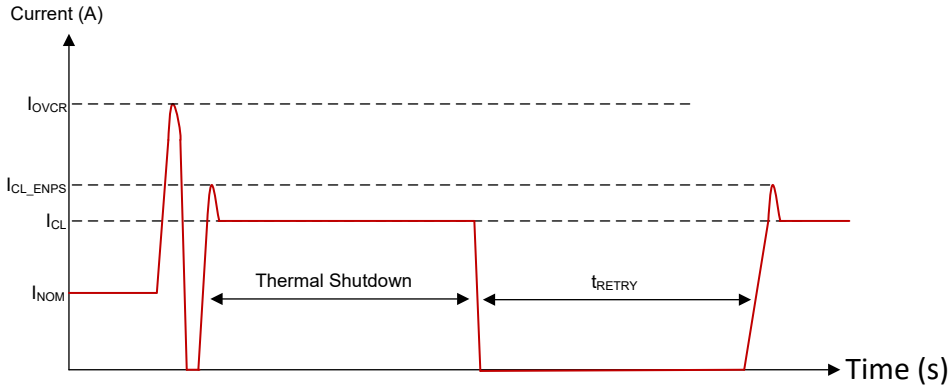

Figure 8-5. On-State Short-Circuit Behavior

Figure 8-6 shows the behavior of the TPS281C30x when there is a small change in impedance that sends the load current above the I_{CL} threshold. The current rises to I_{CL_LINPK} above the regulation level. Then the current limit regulation loop kicks in and the current drops to the I_{CL} value.

Copyright © 2026 Texas Instruments Incorporated

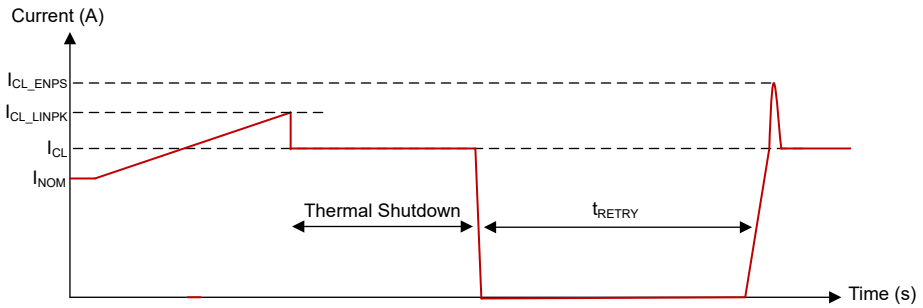

Figure 8-6. Overload Behavior

In all of these cases, the internal thermal shutdown is safe to hit repetitively. There is no device risk or lifetime reliability concerns from repeatedly hitting this thermal shutdown level.

8.4.2.2 Capacitive Charging

Figure 8-7 shows the typical setup for a capacitive load application and the internal blocks that function when using the device. Note that all capacitive loads have an associated "load" in parallel with the capacitor that is described as a resistive load but in reality it can be inductive or resistive.

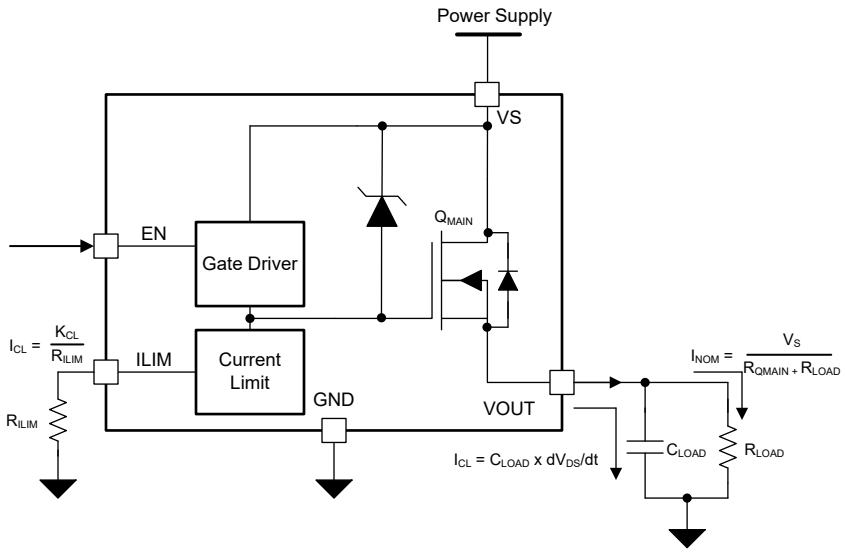

Figure 8-7. Capacitive Charging Circuit

The first thing to check is that the nominal DC current, I_{NOM}, is acceptable for the TPS281C30 device. This can easily be done by taking the $R_{\theta JA}$ from Section 9.4.3 and multiplying the RON of the TPS281C30 and the INOM with it. Add the ambient temperature and if that value is below the thermal shutdown value, the device can operate with that load current. For an example of this calculation see Section 9.

The second key care-about for this application is to make sure that the capacitive load can be charged up completely without the device hitting thermal shutdown. This is because if the device hits thermal shutdown during the charging, the resistive nature of the load in parallel with the capacitor starts to discharge the capacitor over the duration the TPS281C30x is off. Note that there are some application with high enough load impedance that the TPS281C30 hitting thermal shutdown and trying again is acceptable. However, for most applications design the system so that the TPS281C30x does not hit thermal shutdown while charging the capacitor.

With the current clamping feature of the TPS281C30x, capacitors can be charged up at a lower inrush current than other high current limit switches. This lower inrush current means that the capacitor takes a little longer to charge all the way up. However, to minimize this longer charge time during startup, TPS281C30 implements an inrush current handling feature described in On-State Short Circuit Behavior. When the EN pin goes high

to turn on the high side switch, the device defaults its current limit threshold to $I_{LIM_STARTUP}$ for a duration of $I_{LIM_STARTUP_DELAY}$. During this delay period, a capacitive load can be charged at a higher rate than what typical I_{CL} would allow and FAULT is masked to prevent unwanted Fault triggers. After $I_{LIM_STARTUP_DELAY}$, the current limit defaults back to I_{CL} and Fault works normally.

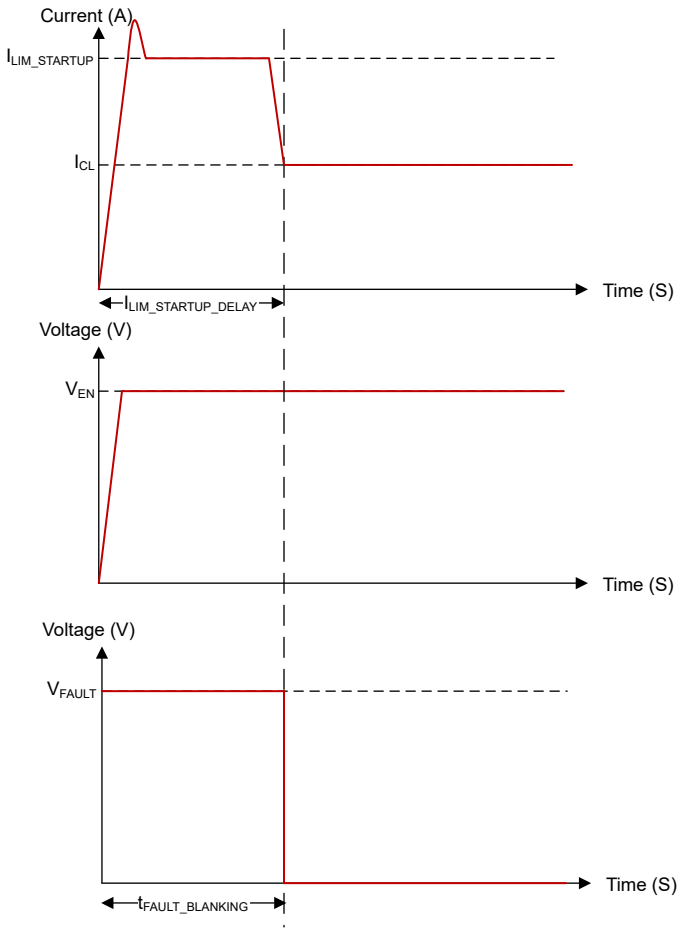

Figure 8-8. Inrush Current Handling

The initial inrush current period when the current limit is higher enables two different system advantages when driving loads:

- Enables higher load current to be supported for a period of time of the order of milliseconds to drive high inrush current loads like incandescent bulb loads.
- Enables fast capacitive load charging. In some situations, it is best to charge capacitive loads at a higher current than the DC current to confirm quick supply bringup. This architecture allows a module to quickly charge a capacitive load using the initial higher inrush current limit and then use a lower current limit to reliably protect the module under overload or short circuit conditions.

Copyright © 2026 Texas Instruments Incorporated

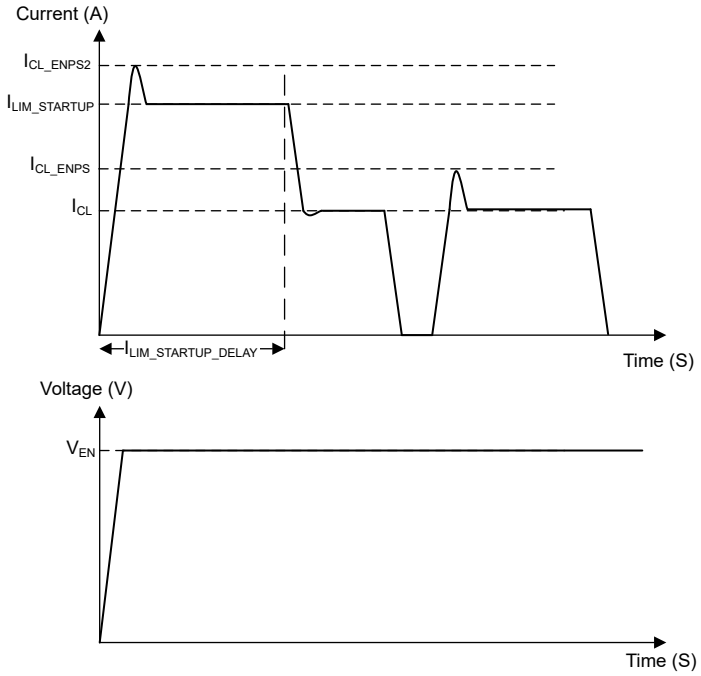

Figure 8-9. Auto-retry Behavior After ILIM_STARTUP_DELAY Period Expires

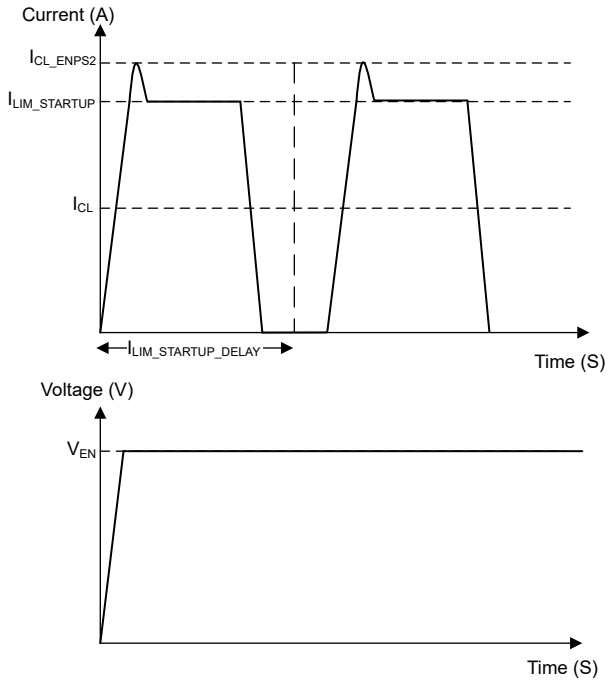

Figure 8-10. Auto-retry Behavior Before ILIM_STARTUP_DELAY Period Expires

While in current limiting mode, at any level, the device has a high power dissipation. If the FET temperature exceeds the over-temperature shutdown threshold, the device turns off just the channel that is overloaded. After cooling down, the device retries. If the device is turning off prematurely on start-up, it is recommended to improve the PCB thermal layout, lower the current limit to lower power dissipation, or decrease the inrush current (capacitive loading).

For more information about capacitive charging with high side switches see the *How to Drive Capacitive Loads* application note. This application note has information about the thermal modeling available along with quick ways to estimate if a high side switch can charge a capacitor to a given voltage.

8.4.3 Inductive-Load Switching-Off Clamp

When an inductive load is switching off, the output voltage is pulled down to negative, due to the inductance characteristics. The power FET can break down if the voltage is not clamped during the current-decay period. To protect the power FET in this situation, internally clamp the drain-to-source voltage, namely $V_{DS,clamp}$, the clamp diode between the drain and gate. Please note that the internal $V_{DS,clamp}$ is only be available in version A, B. For version C, D, E, an external clamp across VDS or at VOUT is required to dissipate the inductive energy properly.

$$V_{DS,Clamp} = V_S - V_{OUT} \tag{3}$$

During the current-decay period (T_{DECAY}), the power FET is turned on for inductance-energy dissipation. Both the energy of the power supply (E_S) and the load (E_{LOAD}) are dissipated on the high-side power switch itself, which is called E_{HSD}. If resistance is in series with inductance, some of the load energy is dissipated in the resistance.

$$E_{HSD} = E_S + E_{LOAD} = E_S + E_L - E_R \tag{4}$$

From the view of the high-side power switch, E_{HSD} equals the integration value during the current-decay period.

$$E_{HSD} = \int_0^{T_{DECAY}} V_{DS,clamp} \times I_{OUT}(t)\, d\, t \tag{5}$$

$$T_{DECAY} = \frac{L}{R} \times \ln\left(\frac{R \times I_{OUT(MAX)} + |V_{OUT}|}{|V_{OUT}|}\right) \tag{6}$$

$$E_{HSD} = L \times \frac{V_{BAT} + |V_{OUT}|}{R^2} \times \left[R \times I_{OUT(MAX)} - |V_{OUT}| \ln\left(\frac{R \times I_{OUT(MAX)} + |V_{OUT}|}{|V_{OUT}|}\right)\right] \tag{7}$$

When R approximately equals 0, E_{HSD} is:

$$E_{HSD} = \frac{1}{2} \times L \times I_{OUT(MAX)}^2 \frac{V_{BAT} + |V_{OUT}|}{R^2} \tag{8}$$

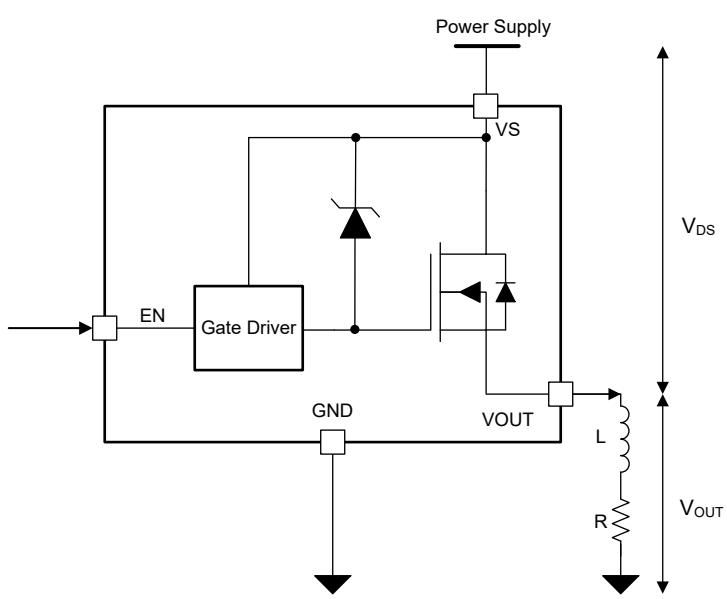

Figure 8-11. Driving Inductive Load

Copyright © 2026 Texas Instruments Incorporated

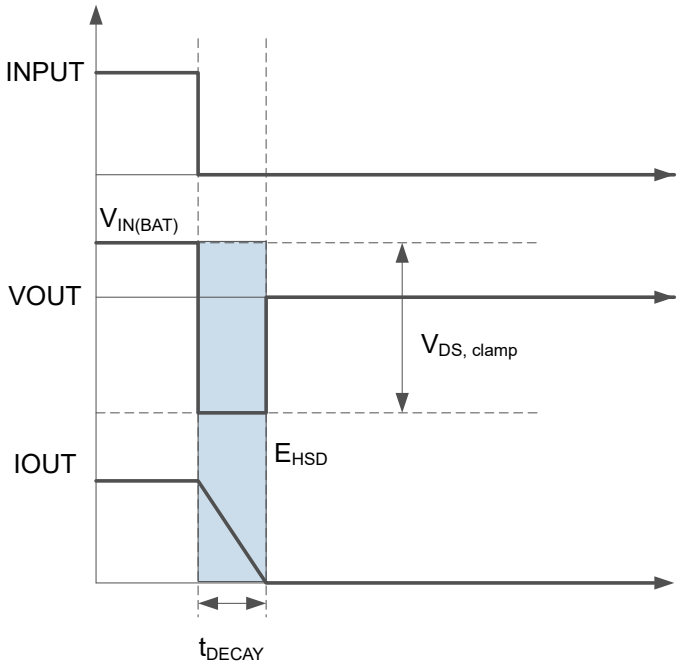

Figure 8-12. Inductive-Load Switching-Off Diagram

As discussed previously, when switching off, battery energy and load energy are dissipated on the high-side power switch, which leads to the large thermal variation. For each high-side power switch, the upper limit of the maximum safe power dissipation depends on the device intrinsic capacity, ambient temperature, and board dissipation condition. TI provides the upper limit of single-pulse energy that devices can tolerate under the test condition: V_S = 24V, inductance from 0.1mH to 400mH, R = 0Ω, FR4 2s2p board, 2× 70µm copper, 2× 35µm copper, thermal pad copper area 600mm^2.

8.4.4 Inductive Load Demagnetization

When switching off an inductive load, the inductor can impose a negative voltage on the output of the switch. The device includes voltage clamps between VS and VOUT to limit the voltage across the FETs and demagnetize load inductance if there is any. The negative voltage applied at the OUT pin drives the discharge of inductor current. Figure 8-13 shows the device discharging a 400mH load.

Figure 8-13. TPS1HTC30 Inductive Discharge (400mH)

The maximum acceptable load inductance is a function of the energy dissipated in the device and therefore the load current and the inductive load. The maximum energy and the load inductance the device can withstand for

one pulse inductive dissipation at 125°C is shown in Figure 8-14. The device can withstand 40% of this energy for one million inductive repetitive pulses with a >4Hz repetitive pulse. If the application parameters exceed this device limit, use a protection device like a freewheeling diode to dissipate the energy stored in the inductor.

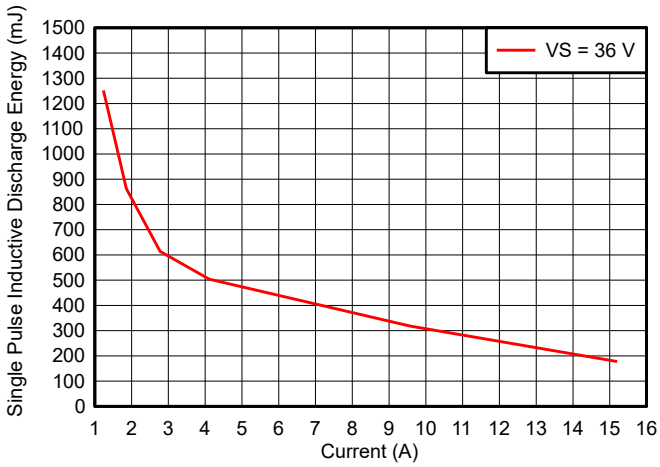

Figure 8-14. TPS1HTC30 Inductive Load Discharge Energy Capability at 125°C

8.4.5 Full Protections and Diagnostics

Current Sensing is active when DIAG_EN enabled. When DIAG_EN is low, current sense is disabled. The SNS output is internally clamped to around 1V if there is an external voltage appear at SNS pin.

Table 8-2. DIAG_EN Logic Table

DIAG_EN	EN CONDITION	PROTECTIONS AND DIAGNOSTICS
HIGH	HIGH	See Table 8-3
	LOW	
LOW	HIGH	Diagnostics disabled and SNS output is clamped internally to around 1V. Protection is normal and $\overline{FAULT}$ continues to indicate TSD or ILIM.
	LOW	

Table 8-3. Status Table (DIAG_EN = HIGH)

CONDITIONS	EN	VOUT	OL_ON	$\overline{FAULT}$	SNS	BEHAVIOR	RECOVERY
Normal Standard Sensing	L	L	L	Hi-Z	0	Normal	
	H	H	L	Hi-Z	I_{Load} / K_{sns1}	Normal	
High Accuracy Sense Invalid Range	H	H	H	L	I_{Load} / K_{sns1}	FAULT is asserted signaling that high accuracy sensing is not enabled since $I_{Load}>I_{Ksns2_EN}$	Clears when load falls below IKSNS2_EN or OL_ON is reset to LO.
High Accuracy Sense Normal Operation	H	H	H	Hi-Z	I_{Load} / K_{sns2}	Enables x50 sense ratio for high accuracy sensing and FAULT stays Hi-Z since valid condition is met $I_{Load}<I_{Ksns2_EN}$.	
Overcurrent	H	V_S - I_{LIM} × R_{LOAD}	x	L	V_{SNSFH}	Holds the current at the current limit until thermal shutdown	
STG, Relative Thermal Shutdown, Absolute Thermal Shutdown	H	H/L	x	L	V_{SNSFH}	Shuts down when devices hits relative or absolute thermal shutdown	Auto retries when $T_{HYS}$is met and it has been longer than t_{RETRY} amount of time

Copyright © 2026 Texas Instruments Incorporated

Table 8-3. Status Table (DIAG_EN = HIGH) (continued)

CONDITIONS	EN	VOUT	OL_ON	$\overline{FAULT}$	SNS	BEHAVIOR	RECOVERY
Open Load (not available in Ver. E)	H	H	L	Hi-Z	I_{Load} / $K_{sns1} \cong 0$	Normal behavior, user can judge if it is an open load or not	
	H	H	H	Hi-Z	I_{Load} / $K_{sns2} \cong 0$	Normal behavior, user can judge if it is an open load or not	
	L	H	L	L	V_{SNSFH}	Internal pullup resistor is active. If $V_S - V_{OUT} < V_{OL}$ then fault active	Clears when fault goes away
Reverse Polarity	x	x	x	x	x	Channel turns on to lower power dissipation. Current into ground pin is limited by external ground network	

8.4.5.1 Open-Load Detection

On-State Open Load Detection

When the main channel is enabled faults are diagnosed by reading the voltage on the SNS or $\overline{FLT}$ pin and judged by the user. A benefit of high-accuracy current sense is that this device can achieve a very low open-load detection threshold, which correspondingly expands the normal operation region. As explained in section high accuracy sense mode, this mode can be used to sense 6mA currents accurately.

Off-State Open Load Detection (available in versions A, B, C, and D)

In the off state, if a load is connected, the output voltage is pulled to 0V. In the case of an open load, the output voltage is close to the supply voltage, $V_S - V_{OUT} < V_{ol,off}$. The FLT pin goes low to indicate the fault to the MCU, and the SNS pin is pulled up to I_{SNSFH}. There is always a leakage current $I_{ol,off}$ present on the output, due to the internal logic control path or external humidity, corrosion, and so forth. Thus, TI implemented an internal pullup resistor to offset the leakage current. This pullup current must be less than the output load current to avoid false detection in the normal operation mode. To reduce the standby current, TI implemented a switch in series with the pullup resistor controlled by the DIAG_EN pin. The pull up resistor value is 150kΩ.

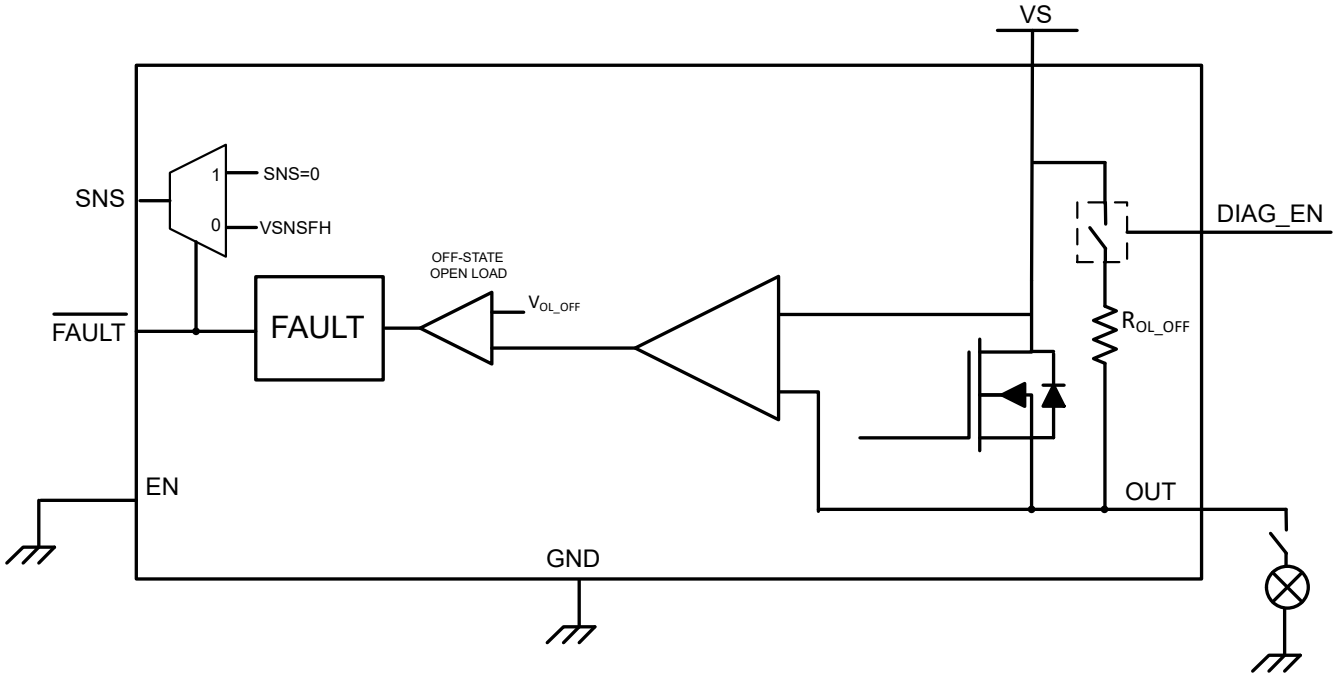

Figure 8-15. Off-State Open-Load Detection Circuit

8.4.5.2 Thermal Protection Behavior

The thermal protection behavior can be split up into two categories of events that can occur. Figure 8-16 shows each of these categories.

1. Relative thermal shutdown: The device is enabled into an overcurrent event. The DIAG_EN pin is high so that diagnostics can be monitored on SNS and FLT. The output current rises up to the I_{ILIM} level and the FLT goes low while the SNS goes to V_{SNSFH}. With this large amount of current going through the junction temperature of the FET increases rapidly with respect to the controller temperature. When the power FET temperature rises T_{REL} amount above the controller junction temperature $\Delta T = T_{FET} - T_{CON} > T_{REL}$, the device shuts down. The faults are continually shown on SNS and FLT and the part waits for the tRETRY timer to expire. When t_{RETRY} timer expires, since EN is still high, the device comes back on into this I_{ILIM} condition.
2. Absolute thermal shutdown: In this case, the ambient temperature is now much higher than previous. The device is still enabled in an overcurrent event with DIAG_EN high. However, in this case the junction temperature rises up and hits an absolute reference temperature, TABS, and then shuts down. The device does not recover until both $T_J < T_{ABS} - T_{hys}$ and the t_{RETRY} timer expires.

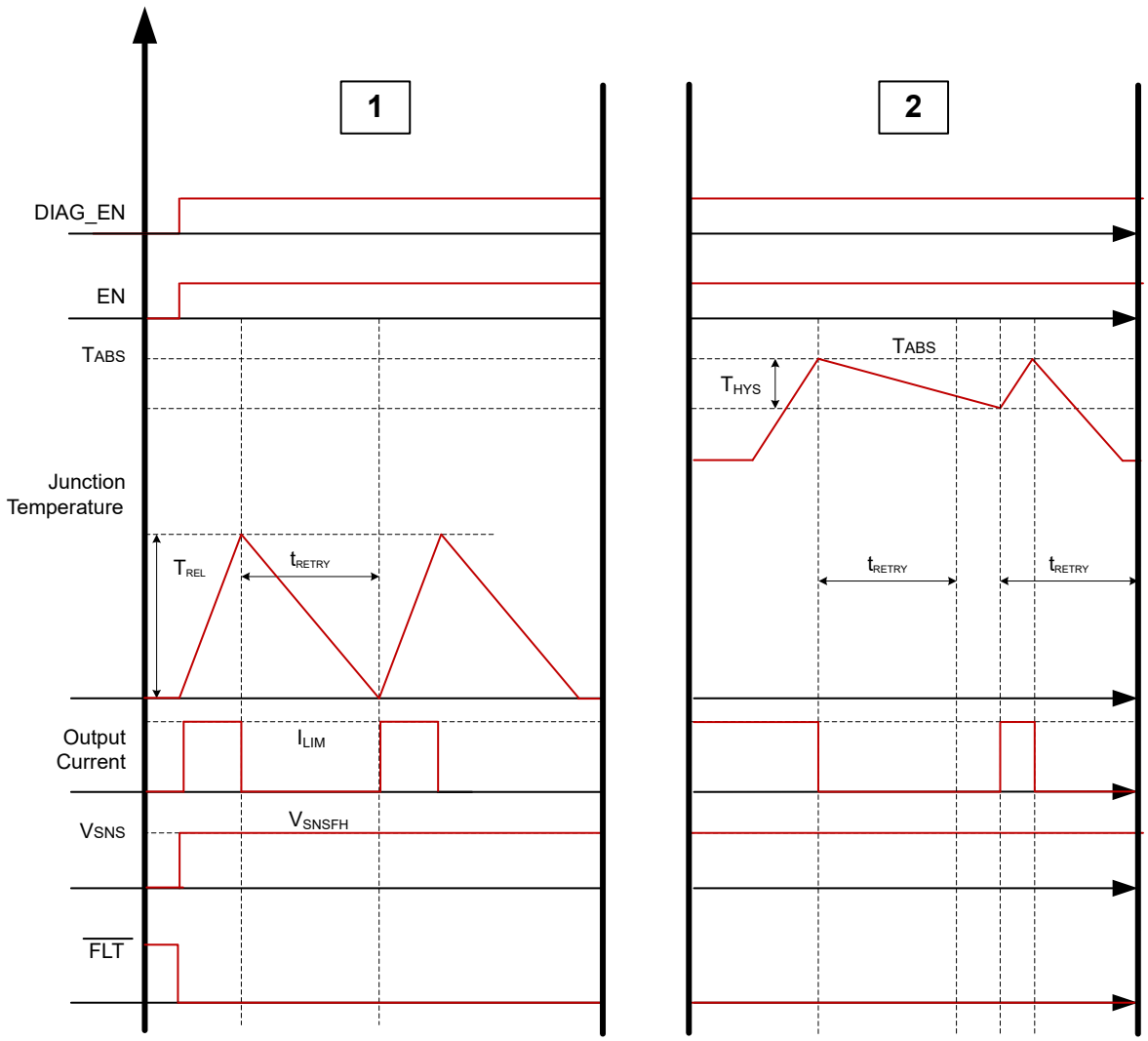

Figure 8-16. Thermal Behavior

Copyright © 2026 Texas Instruments Incorporated

8.4.5.3 Undervoltage Lockout (UVLO) Protection

The device monitors the supply voltage V_S to prevent unpredicted behaviors in the event that the supply voltage is too low. When the supply voltage falls down to V_{UVLOF}, the output stage is shut down automatically. When the supply rises up to V_{UVLOR}, the device turns on. If an overcurrent event trips the UVLO threshold, the device shuts off and come back on into a current limit safely.

8.4.5.4 Overvoltage (OVP) Protection

The device monitors the supply voltage V_S to prevent unpredicted behaviors in the event that the supply voltage is too high. When the supply increases beyond $V_{S,OVPR}$, the output stage shuts down automatically. When the supply falls below $V_{S,OVPF}$, the device turns on. If an overcurrent event trips the OVP threshold due to inductive load oscillations, the integrates a deglitcher to avoid immediate output shutoff due to short transients.

Copyright © 2026 Texas Instruments Incorporated

8.4.5.5 Reverse Polarity Protection

8.4.5.5.1 Method 1

Blocking diode connected with VBB. Both the device and load are protected when in reverse polarity. The blocking diode does not allow any of the current to flow during reverse battery condition.

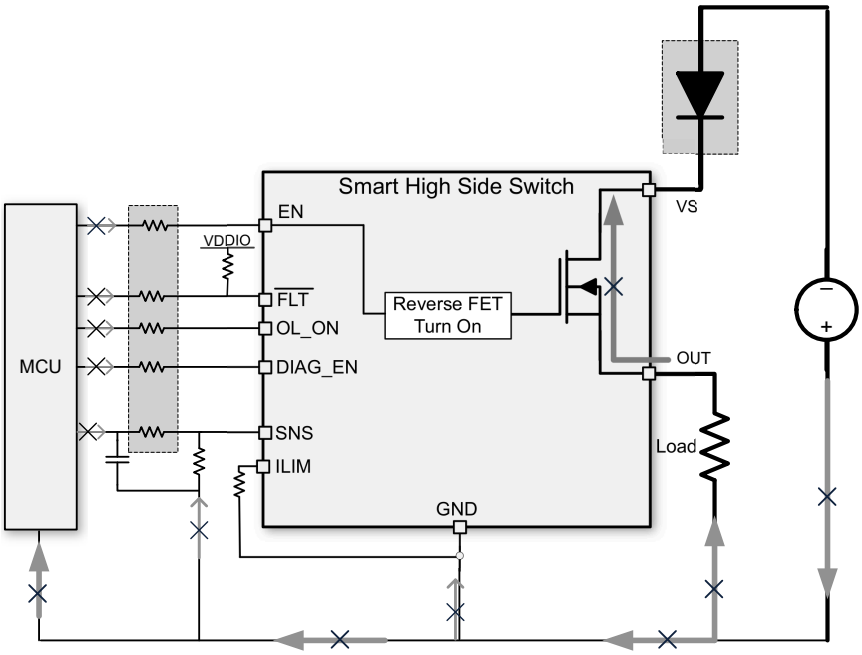

Figure 8-17. Reverse Protection With Blocking Diode

8.4.5.5.2 Method 2 (GND Network Protection)

Only the high-side device is protected under this connection. The load reverse loop is limited by the load itself. Note when reverse polarity occurs, the continuous reverse current through the power FET must be less than I_{rev}. Of the three types of ground pin networks, TI strongly recommends type three (the resistor and diode in parallel). No matter what types of connection are between the device GND and the board GND, if a GND voltage shift occurs, confirm the following proper connections for the normal operation:

- Leave the NC pin floating or connect to the device GND. TI recommends to leave floating.
- Connect the current limit programmable resistor to the device GND.

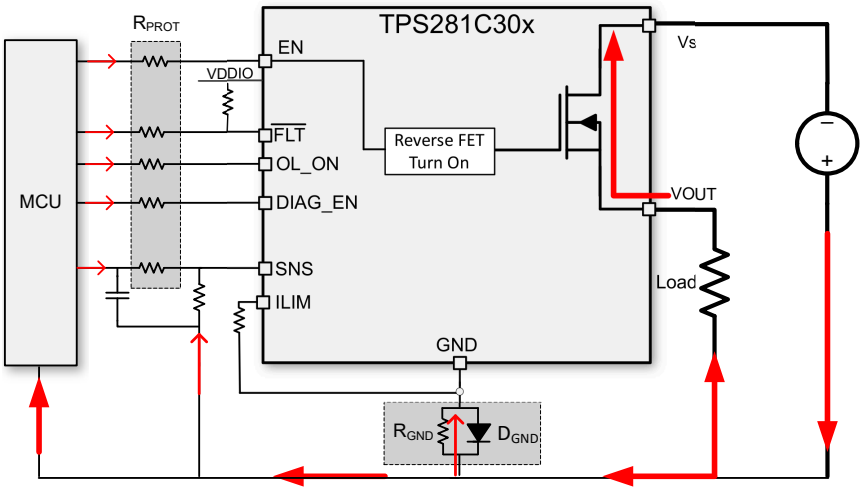

Figure 8-18. Reverse Protection With GND Network

Copyright © 2026 Texas Instruments Incorporated

- Type 1 (resistor): The higher resistor value contributes to a better current limit effect when the reverse battery or negative ISO pulses. However, this leads to higher GND shift during normal operation mode. Also, consider the resistor power dissipation.

$$R_{GND} \leq \frac{V_{GNDshift}}{I_{nom}} \tag{9}$$

$$R_{GND} \geq \frac{(-V_{CC})}{(-I_{GND})} \tag{10}$$

  where

  - $V_{GNDshift}$ is the maximum value for the GND shift, determined by the HSS and microcontroller. TI suggests a value ≤ 0.6V.
  - I_{nom} is the nominal operating current.
  - $-V_{CC}$ is the maximum reverse voltage seen on the battery line.
  - $-I_{GND}$ is the maximum reverse current the ground pin can withstand, which is available in Section 6.1.

  If multiple high-side power switches are used, the resistor can be shared among devices.
- Type 2 (diode): A diode is needed to block the reverse voltage, which also brings a ground shift (approximately 600mV). However, an inductive load is not acceptable to avoid an abnormal status when switching off.
- Type 3 (resistor and diode in parallel [recommended]): A peak negative spike can occur when the inductive load is switching off, which can damage the HSD or the diode. So, TI recommends a resistor in parallel with the diode when driving an inductive load. The recommended selection are 1.5kΩ resistor in parallel with an I_F > 100mA diode. If using multiple high-side switches, share the resistor and diode among devices.

8.4.5.6 Protection for MCU I/Os

In many conditions, such as the negative surge pulse, or the loss of battery with an inductive load, a negative potential on the device GND pin can damage the MCU I/O pins (more likely, the internal circuitry connected to the pins). Therefore, the serial resistors between MCU and HSS are required.

Also, for proper protection against loss of GND, TI recommends 10kΩ resistance for the RPROT resistors.

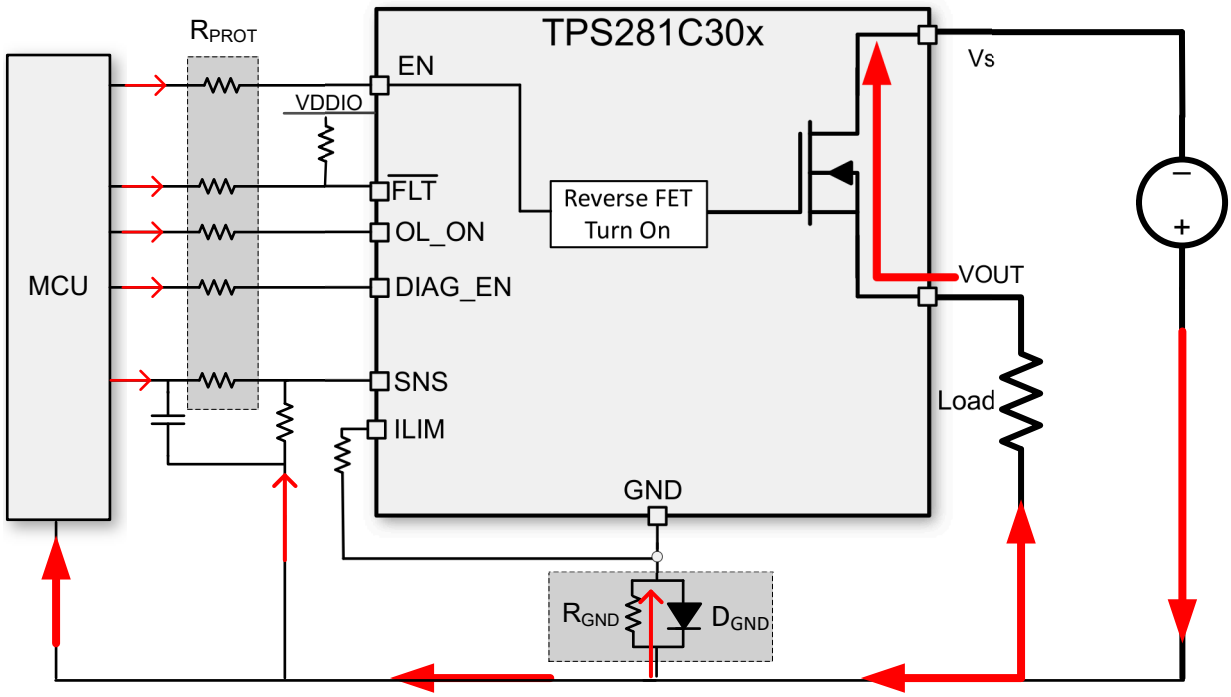

Figure 8-19. MCU IO Protections

8.4.5.7 Diagnostic Enable Function

The diagnostic enable pin, DIAG_EN, offers multiplexing of the microcontroller diagnostic input for current sense or digital status, by sharing the same sense resistor and ADC line or I/O port among multiple devices.

In addition, use this pin to manage power dissipation by the device. During the ouput-on period, if no continuous sense output diagnostics are required, the diagnostic disable feature lowers the operating current. On the other hand, the output-off period, the diagnostic disable function lowers the current consumption for the standby condition.

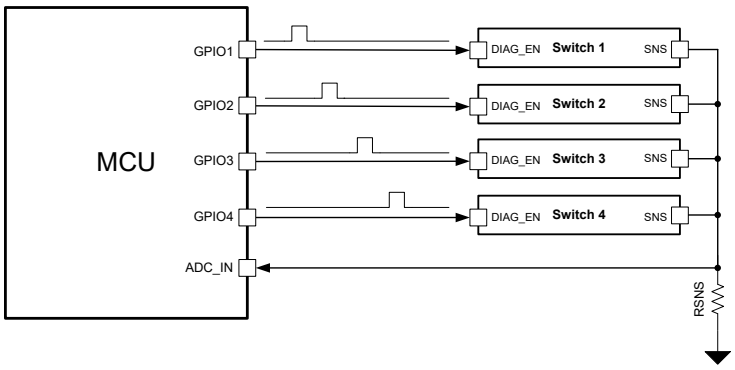

Figure 8-20. Resistor sharing

8.4.5.8 Loss of Ground

The ground connection may be lost either on the device level or on the module level. If the ground connection is lost, the channel output will be disabled irrespective of the EN input level. If the switch was already disabled when the ground connection was lost, the outputs will remain disabled even when the channels are enabled. The steady state current from the output to the load that remains connected to the system ground is below the level

Copyright © 2026 Texas Instruments Incorporated

specified in the *Specifications* section of this document. When the ground is reconnected, normal operation will resume.

8.4.5.9 Enhanced EFT Immunity

TPS281C30E has an enhanced EFT immunity compared to the other variants. The E variant implemented a stronger gate pulldown circuit which helps the device in the OFF state to stay OFF when an EFT pulses comes in. Due to the active circuit in the OFF state, the E variant draws a higher current from the supply during the OFF state $I_{Q(OFF)}$compared to the other variants. E version device has Hi-Z on the output while OFF, with leakage current $I_{OUT(OFF)}$.

The maximum EFT voltage level $V_{(EFT)}$ largely depends on the components used in the test circuit. The larger the output capacitor, and the smaller the coupling capacitor, the higher the EFT voltage level can be tolerated. As the coupling capacitor value is fixed in most EFT standards, increasing the output capacitor value can be an effective way to increase the maximum EFT voltage level.

Figure 8-21 shows the setup for EFT testing. TPS281C30E is tested to pass ± 2.5kV EFT at VS and VOUT with 10nF output capacitor and 100pF coupling capacitor as shown in the diagram. The output capacitor can be increased if passing higher level of EFT is desired. The A, B, C, D variants are tested to pass ± 2kV EFT at VS and VOUT with 22nF output capacitor and 100pF coupling capacitor. The DIAG_EN has to be high for A, B, C, D version in the OFF state to not enter the sleep state and have the EFT immunity stated above, while the DIAG_EN can be either high or low for E version as the EFT protection circuit is always active. The test conditions are outlined in EFT Test Conditions.

There is a strong pulldown circuitry to keep the power FET OFF during OFF state EFT transient. The circuitry is activated after EFT_{DELAY} period to not affect the normal turn-off slew rate. However, the part is not protected during the EFT_{DELAY} period as illustrated in Figure 8-22.

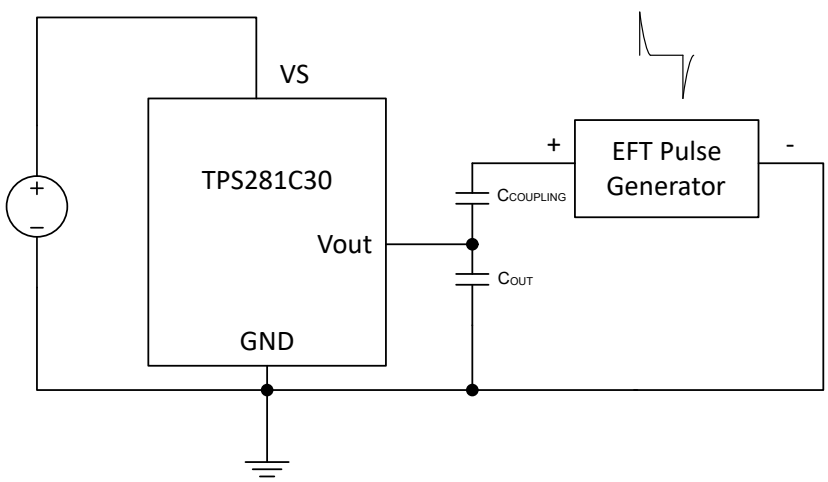

Figure 8-21. EFT Test Setup

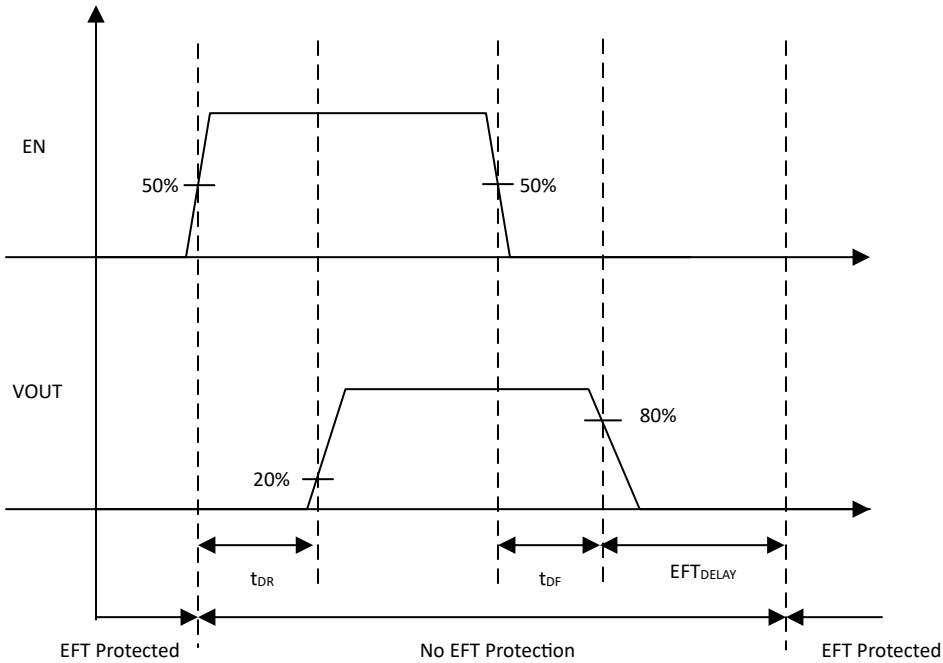

Figure 8-22. EFT Timing Diagram

Table 8-4. EFT Test Conditions

Device Version	EFT Level	C_{OUT}	$C_{COUPLING}$	DIAG_EN
A, B, C, D	± 2kV	22nF	100pF	High
E	± 2.5kV	10nF	100pF	High/Low

Copyright © 2026 Texas Instruments Incorporated

9 Application and Implementation

Note

Information in the following applications sections is not part of the TI component specification, and TI does not warrant its accuracy or completeness. TI's customers are responsible for determining suitability of components for their purposes, as well as validating and testing their design implementation to confirm system functionality.

9.1 Application Information

9.2 Typical Application

The Typical Application Circuit shows an example of how to design the external circuitry parameters.

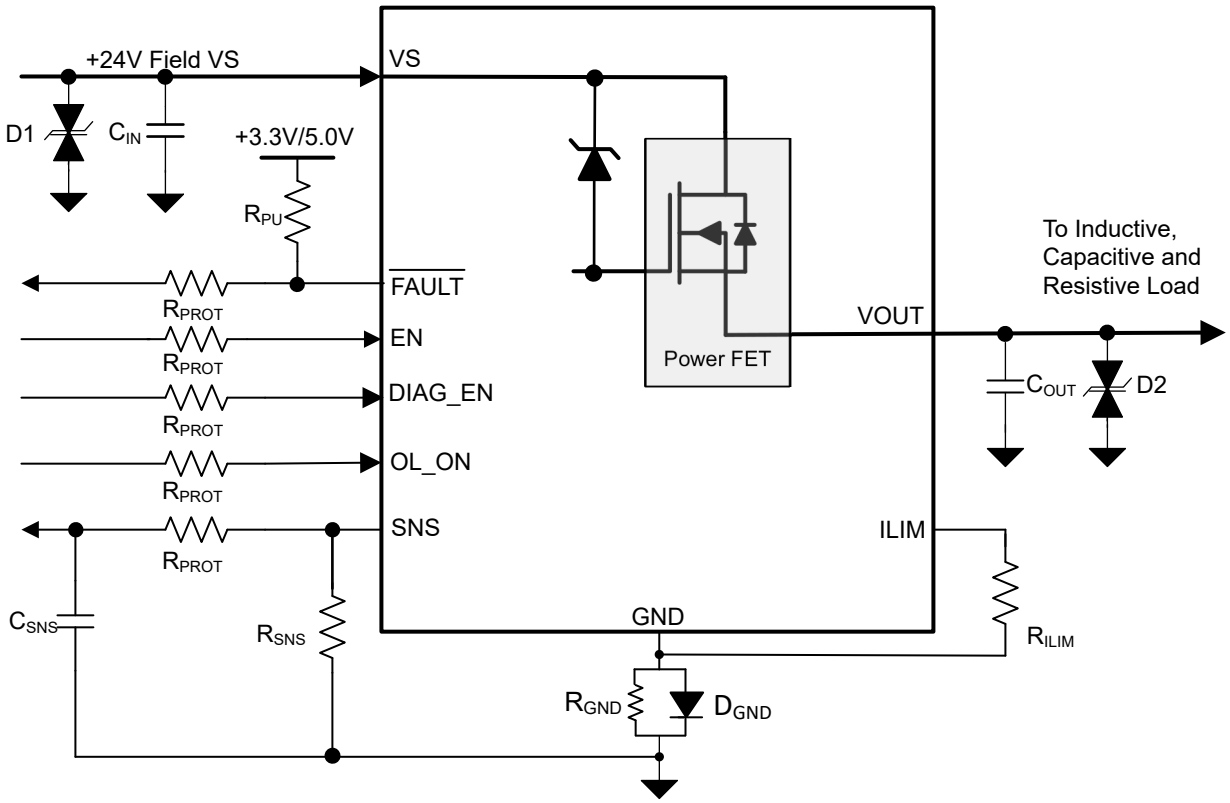

Figure 9-1. Typical Application Circuit

9.2.1 Design Requirements

Component	Typical Value	Purpose
D1	SMBJ60CA	Clamp surge voltages at the supply input
D2	SMBJ36CA (Optional for version A, B)	Dissipate the inductive energy at turn-off. A clamp is required for version C, D, E for driving inductive loads.
CIN1	100nF	Stabilize the input supply and filter out low frequency noise.
CIN2	4.7nF	Filtering of voltage transients (for example, ESD, IEC 61000-4-5) and improved emissions.
RPROT	10kΩ	Protection resistor for microcontroller and device I/O pins - Optional for reverse polarity protection
RILIM	7.5kΩ – 50kΩ	Set current limit threshold
RSNS	1kΩ	Translate the sense current into sense voltage.
CSNS	100pF	Coupled with RPROT on the SNS line creates a low pass filter to filter out noise going into the ADC of the MCU.
CVOUT	22nF	Improves EMI performance, filtering of voltage transients
RGND	1kΩ	Stabilize GND potential during turn-off of inductive load - Optional for reverse polarity protection
DGND	BAS21 Diode	Keeps GND close to system ground during normal operation - Optional for reverse polarity protection

9.2.1.1 IEC 61000-4-5 Surge

The TPS281C30 is designed to survive against IEC 61000-4-5 surge using external TVS clamps. The device is rated to 64V ensuring that external TVS diodes can clamp below the rated maximum voltage of the TPS281C30x. Above 64V, the device includes VDS clamps to help shunt current and ensure that the device survives the transient pulses. Depending on the class of the output, TI recommends that the system has a SMBJ36A or SMCJ36A between VS and module GND.

9.2.2 Detailed Design Procedure

9.2.2.1 Selecting RILIM

In this application, the TPS281C30A must allow for the maximum DC current with margin but minimize the energy in the switch and the load on the input supply during a fault condition by minimizing the current limit.

The nominal current limit should be set such that the worst case (lowest) current limit will be higher than the maximum load current (4A). Since the lower limit is 10% below the typical value, for this application, the best I_{LIM} set point is approximately 5.5A. The below equation allows you to calculate the R_{ILIM} value that is placed from the I_{LIMx} pins to GND pin of the device. R_{ILIM} is calculated in kΩ.

$$R_{ILIM} = K_{CL} / I_{CL} \tag{11}$$

The K_{CL} value in the *Specifications* section is 50A/kΩ. So the calculated value of R_{ILIM} is 9.09kΩ which can be found as a standard 1% resistor.

9.2.2.2 Selecting RSNS

Table 9-1 shows the requirements for the load current sense in this application. The K_{SNS} value is specified for the device and can be found in the *Specifications* section.

Table 9-1. R_{SNS} Calculation Parameters

PARAMETER	EXAMPLE VALUE
Current Sense Ratio (K_{SNS1})	1300

Copyright © 2026 Texas Instruments Incorporated

Table 9-1. R_{SNS} Calculation Parameters (continued)

PARAMETER	EXAMPLE VALUE
Current Sense Ratio (K_{SNS2})	24
Largest diagnosable load current	4.8A
Smallest diagnosable load current	4mA
Full-scale ADC voltage	5.0V
ADC resolution	10 bit

The load current measurement up to 4.8A ensures that even in the event of a overload but below the set current limit, the MCU can register and react by turning off the FET while the low level of 4mA allows for accurate measurement of low load currents and enable the distinction open load faults from supported nominal load currents. For load currents < 50mA, the customer can enable high accuracy sensing to change the sense ratio from KSNS1 to KSNS2. This prevents the requirement of a higher resolution ADC and it also increases sense accuracy. Go to high accuracy sensing for more information.

The R_{SNS} resistor value should be selected such that the largest diagnosable load current puts the SNS pin voltage (V_{SNS}) at about 90% of the ADC full-scale. With this design, any ADC value above 80% of full scale (FS) can be considered a fault. Additionally, the R_{SNS} resistor value should ensure that the smallest diagnosable load current does not cause V_{SNS} to fall below at a least a few LSB of the ADC.

With the given example values, a 1.0kΩ sense resistor satisfies both requirements.

Table 9-2. V_{SNS} Calculation

Sense Mode	OL_ON	LOAD (A)	SENSE RATIO	I_{SNS} (mA)	R_{SNS} (Ω)	V_{SNS} (V)	% of 5V ADC
Standard Sensing	LO	4.8A	1200	3.69	1000	3.69	73.8%
High Accuracy Sensing	HI	0.004	24	0.166	1000	0.166	3.3% (~34LSBs)

9.3 Power Supply Recommendations

The TPS281C30 device is designed to operate in a 24V industrial system. The allowed supply voltage range (VS pin) is 6V to 36V as measured at the VS pin with respect to the GND pin of the device. In this range the device meets full parametric specifications as listed in Section 6.5. The device is also designed to withstand voltage transients beyond this range such as SELV supply failures.

It is recommended to place a 0.1µF capacitor at the Vs supply input to stabilize the input supply and filter out low frequency noise. The power supply must be able to withstand all transient load current steps. In cases where the power supply is slow to respond to a large transient current or large load current step, additional bulk capacitance can be required on the input.

VS INPUT SUPPLY VOLTAGE RANGE	DESCRIPTION
6V to 36V	Nominal supply voltage, all parametric specifications apply. The device is completely short-circuit protected.
36V > VS > $V_{S, OVPR}$	Device is fully functional and protected but timing parametrics can deviate from specifications.
VS > $V_{s, OVPR}$	SELV supply voltage. Device disables and tolerates up to 64V at the input for extended period of time.

9.4 Layout

9.4.1 Layout Guidelines

To prevent thermal shutdown, T_J must be less than 125°C. If the output current is very high, the power dissipation may be large. The HTSSOP and QFN packages have good thermal impedance. However, the PCB

layout is very important. Good PCB design can optimize heat transfer, which is absolutely essential for the long-term reliability of the device.

- Maximize the copper coverage on the PCB to increase the thermal conductivity of the board. The major heat-flow path from the package to the ambient is through the copper on the PCB. Maximum copper is extremely important when there are not any heat sinks attached to the PCB on the other side of the board opposite the package.
- Add as many thermal vias as possible directly under the package ground pad to optimize the thermal conductivity of the board.
- All thermal vias should either be plated shut or plugged and capped on both sides of the board to prevent solder voids. To ensure reliability and performance, the solder coverage should be at least 85%.

9.4.1.1 EMC Considerations

9.4.2 Layout Example

9.4.2.1 RGW Layout with a GND Network

With a GND network, tie the thermal pad with a single trace through the GND network to the board GND copper.

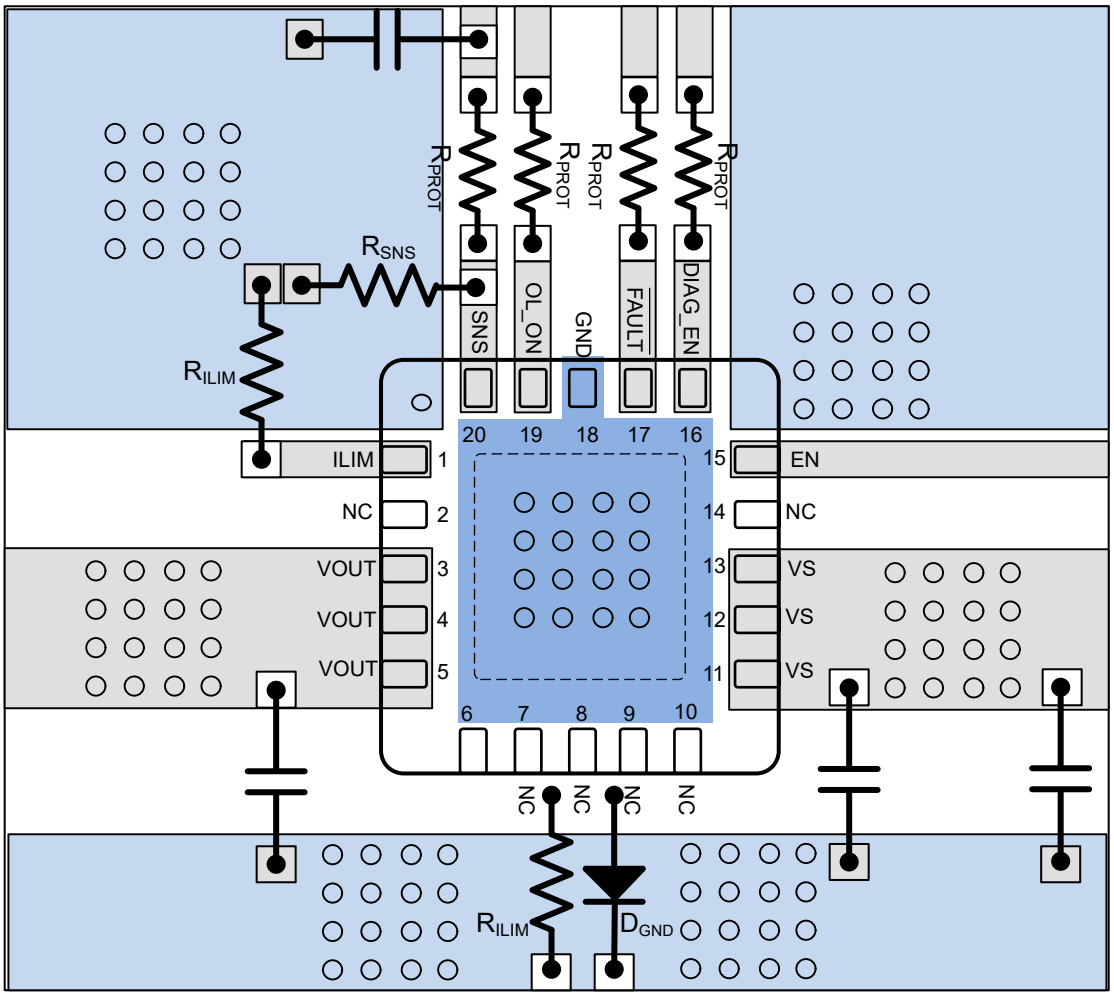

Figure 9-2. RGW Layout With a GND Network

9.4.3 Thermal Considerations

This device has thermal shutdown (TABS) circuitry as a protection from overheating. For continuous normal operation, the junction temperature must not exceed the thermal-shutdown trip point. If the junction temperature

Copyright © 2026 Texas Instruments Incorporated

exceeds the thermal-shutdown trip point, the output turns off. When the junction temperature falls below the thermal-shutdown trip point, the output turns on again.

Calculate the power dissipated by the device according to Equation 12.

$$P_T = I_{OUT}^2 \times R_{DSON} + V_S \times I_{Q,VS} \quad (12)$$

where

- P_T = Total power dissipation of the device

After determining the power dissipated by the device, calculate the junction temperature from the ambient temperature and the device thermal impedance.

$$T_J = T_A + R_{\theta JA} \times P_T \quad (13)$$

For more information please see How to Drive Resistive, Inductive, Capacitive, and Lighting Loads.

10 Device and Documentation Support

10.1 Receiving Notification of Documentation Updates

To receive notification of documentation updates, navigate to the device product folder on ti.com. Click on *Notifications* to register and receive a weekly digest of any product information that has changed. For change details, review the revision history included in any revised document.

10.2 Support Resources

TI E2E™ support forums are an engineer's go-to source for fast, verified answers and design help — straight from the experts. Search existing answers or ask your own question to get the quick design help you need.

Linked content is provided "AS IS" by the respective contributors. They do not constitute TI specifications and do not necessarily reflect TI's views; see TI's Terms of Use.

10.3 Trademarks

TI E2E™ is a trademark of Texas Instruments.
All trademarks are the property of their respective owners.

10.4 Electrostatic Discharge Caution

This integrated circuit can be damaged by ESD. Texas Instruments recommends that all integrated circuits be handled with appropriate precautions. Failure to observe proper handling and installation procedures can cause damage.

ESD damage can range from subtle performance degradation to complete device failure. Precision integrated circuits may be more susceptible to damage because very small parametric changes could cause the device not to meet its published specifications.

10.5 Glossary

TI Glossary	This glossary lists and explains terms, acronyms, and definitions.

11 Revision History

NOTE: Page numbers for previous revisions may differ from page numbers in the current version.

Changes from Revision B (August 2024) to Revision C (October 2026)	Page
• Updated the numbering format for tables, figures, and cross-references throughout the document	1
• Deleted PWP package option from datasheet	1
• Updated current limit specifications in electrical characteristics table	7
• Updated Section 8.4.3	32
• Changed Equation 12 from I_{NOM} to $I_{Q,VS}$	46

Changes from Revision A (June 2023) to Revision B (August 2024)	Page
• Added variant TPS281C30E to the datasheet	1

12 Mechanical, Packaging, and Orderable Information

The following pages include mechanical, packaging, and orderable information. This information is the most current data available for the designated devices. This data is subject to change without notice and revision of this document. For browser-based versions of this data sheet, refer to the left-hand navigation.

Copyright © 2026 Texas Instruments Incorporated

PACKAGING INFORMATION

Orderable part number	Status (1)	Material type (2)	Package | Pins	Package qty | Carrier	RoHS (3)	Lead finish/ Ball material (4)	MSL rating/ Peak reflow (5)	Op temp (°C)	Part marking (6)
TPS281C30ARGWR	Active	Production	VQFN (RGW) | 20	3000 | LARGE T&R	Yes	NIPDAU	Level-2-260C-1 YEAR	-40 to 125	28C30A
TPS281C30ARGWR.A	Active	Production	VQFN (RGW) | 20	3000 | LARGE T&R	Yes	NIPDAU	Level-2-260C-1 YEAR	-40 to 125	28C30A
TPS281C30BRGWR	Active	Production	VQFN (RGW) | 20	3000 | LARGE T&R	Yes	NIPDAU	Level-2-260C-1 YEAR	-40 to 125	28C30B
TPS281C30BRGWR.A	Active	Production	VQFN (RGW) | 20	3000 | LARGE T&R	Yes	NIPDAU	Level-2-260C-1 YEAR	-40 to 125	28C30B
TPS281C30BRGWRG4	Active	Production	VQFN (RGW) | 20	3000 | LARGE T&R	Yes	NIPDAU	Level-2-260C-1 YEAR	-40 to 125	28C30B
TPS281C30BRGWRG4.A	Active	Production	VQFN (RGW) | 20	3000 | LARGE T&R	Yes	NIPDAU	Level-2-260C-1 YEAR	-40 to 125	28C30B
TPS281C30CRGWR	Active	Production	VQFN (RGW) | 20	3000 | LARGE T&R	Yes	NIPDAU	Level-2-260C-1 YEAR	-40 to 125	28C30C
TPS281C30CRGWR.A	Active	Production	VQFN (RGW) | 20	3000 | LARGE T&R	Yes	NIPDAU	Level-2-260C-1 YEAR	-40 to 125	28C30C
TPS281C30DRGWR	Active	Production	VQFN (RGW) | 20	3000 | LARGE T&R	Yes	NIPDAU	Level-2-260C-1 YEAR	-40 to 125	28C30D
TPS281C30DRGWR.A	Active	Production	VQFN (RGW) | 20	3000 | LARGE T&R	Yes	NIPDAU	Level-2-260C-1 YEAR	-40 to 125	28C30D
TPS281C30ERGWR	Active	Production	VQFN (RGW) | 20	5000 | LARGE T&R	Yes	NIPDAU	Level-2-260C-1 YEAR	-40 to 125	28C30E
TPS281C30ERGWR.A	Active	Production	VQFN (RGW) | 20	5000 | LARGE T&R	Yes	NIPDAU	Level-2-260C-1 YEAR	-40 to 125	28C30E

(1) **Status:** For more details on status, see our product life cycle.

(2) **Material type:** When designated, preproduction parts are prototypes/experimental devices, and are not yet approved or released for full production. Testing and final process, including without limitation quality assurance, reliability performance testing, and/or process qualification, may not yet be complete, and this item is subject to further changes or possible discontinuation. If available for ordering, purchases will be subject to an additional waiver at checkout, and are intended for early internal evaluation purposes only. These items are sold without warranties of any kind.

(3) **RoHS values:** Yes, No, RoHS Exempt. See the TI RoHS Statement for additional information and value definition.

(4) **Lead finish/Ball material:** Parts may have multiple material finish options. Finish options are separated by a vertical ruled line. Lead finish/Ball material values may wrap to two lines if the finish value exceeds the maximum column width.

(5) **MSL rating/Peak reflow:** The moisture sensitivity level ratings and peak solder (reflow) temperatures. In the event that a part has multiple moisture sensitivity ratings, only the lowest level per JEDEC standards is shown. Refer to the shipping label for the actual reflow temperature that will be used to mount the part to the printed circuit board.

(6) **Part marking:** There may be an additional marking, which relates to the logo, the lot trace code information, or the environmental category of the part.

Multiple part markings will be inside parentheses. Only one part marking contained in parentheses and separated by a "~" will appear on a part. If a line is indented then it is a continuation of the previous line and the two combined represent the entire part marking for that device.

Important Information and Disclaimer: The information provided on this page represents TI's knowledge and belief as of the date that it is provided. TI bases its knowledge and belief on information provided by third parties, and makes no representation or warranty as to the accuracy of such information. Efforts are underway to better integrate information from third parties. TI has taken and continues to take reasonable steps to provide representative and accurate information but may not have conducted destructive testing or chemical analysis on incoming materials and chemicals. TI and TI suppliers consider certain information to be proprietary, and thus CAS numbers and other limited information may not be available for release.

In no event shall TI's liability arising out of such information exceed the total purchase price of the TI part(s) at issue in this document sold by TI to Customer on an annual basis.

TAPE AND REEL INFORMATION

REEL DIMENSIONS

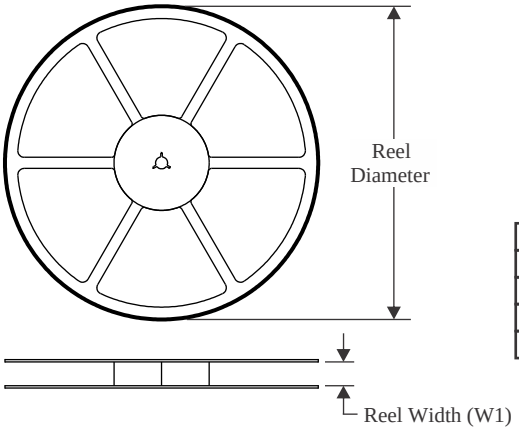

TAPE DIMENSIONS

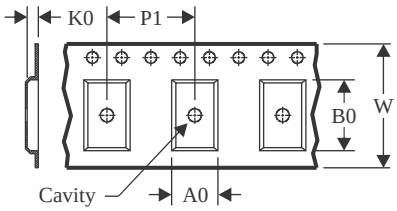

A0	Dimension designed to accommodate the component width
B0	Dimension designed to accommodate the component length
K0	Dimension designed to accommodate the component thickness
W	Overall width of the carrier tape
P1	Pitch between successive cavity centers

QUADRANT ASSIGNMENTS FOR PIN 1 ORIENTATION IN TAPE

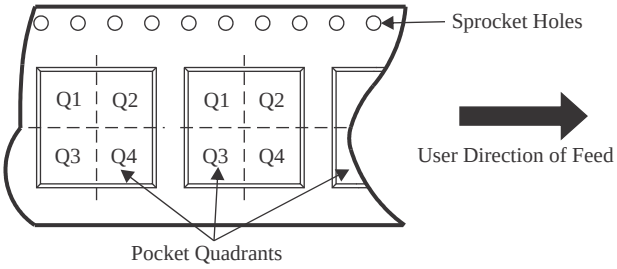

*All dimensions are nominal

Device	Package Type	Package Drawing	Pins	SPQ	Reel Diameter (mm)	Reel Width W1 (mm)	A0 (mm)	B0 (mm)	K0 (mm)	P1 (mm)	W (mm)	Pin1 Quadrant
TPS281C30ARGWR	VQFN	RGW	20	3000	330.0	12.4	5.3	5.3	1.1	8.0	12.0	Q2
TPS281C30BRGWR	VQFN	RGW	20	3000	330.0	12.4	5.3	5.3	1.1	8.0	12.0	Q2
TPS281C30BRGWRG4	VQFN	RGW	20	3000	330.0	12.4	5.3	5.3	1.1	8.0	12.0	Q2
TPS281C30CRGWR	VQFN	RGW	20	3000	330.0	12.4	5.3	5.3	1.1	8.0	12.0	Q2
TPS281C30DRGWR	VQFN	RGW	20	3000	330.0	12.4	5.3	5.3	1.1	8.0	12.0	Q2
TPS281C30ERGWR	VQFN	RGW	20	5000	330.0	12.4	5.3	5.3	1.1	8.0	12.0	Q2

TAPE AND REEL BOX DIMENSIONS

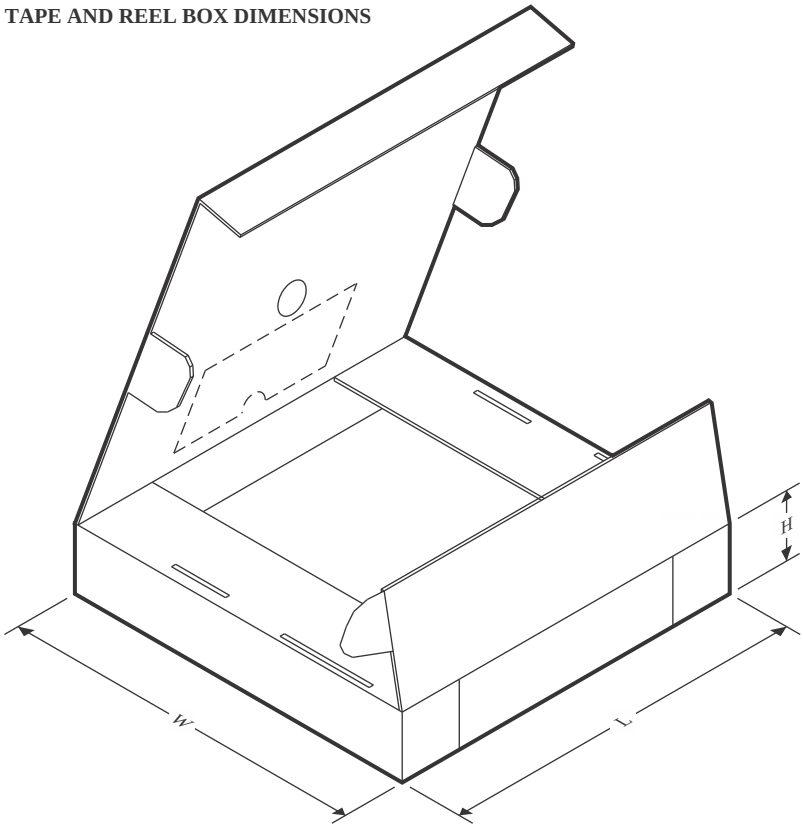

*All dimensions are nominal

Device	Package Type	Package Drawing	Pins	SPQ	Length (mm)	Width (mm)	Height (mm)
TPS281C30ARGWR	VQFN	RGW	20	3000	360.0	360.0	36.0
TPS281C30BRGWR	VQFN	RGW	20	3000	360.0	360.0	36.0
TPS281C30BRGWRG4	VQFN	RGW	20	3000	367.0	367.0	35.0
TPS281C30CRGWR	VQFN	RGW	20	3000	360.0	360.0	36.0
TPS281C30DRGWR	VQFN	RGW	20	3000	360.0	360.0	36.0
TPS281C30ERGWR	VQFN	RGW	20	5000	360.0	360.0	36.0

GENERIC PACKAGE VIEW

RGW 20

VQFN - 1 mm max height

5 x 5, 0.65 mm pitch

PLASTIC QUAD FLATPACK - NO LEAD

This image is a representation of the package family, actual package may vary.
Refer to the product data sheet for package details.

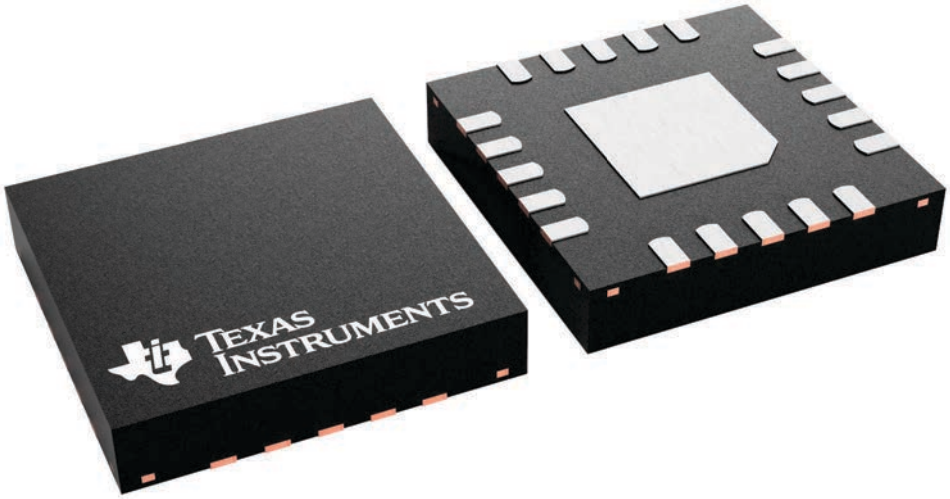

4227157/A

PLASTIC QUAD FLATPACK-NO LEAD

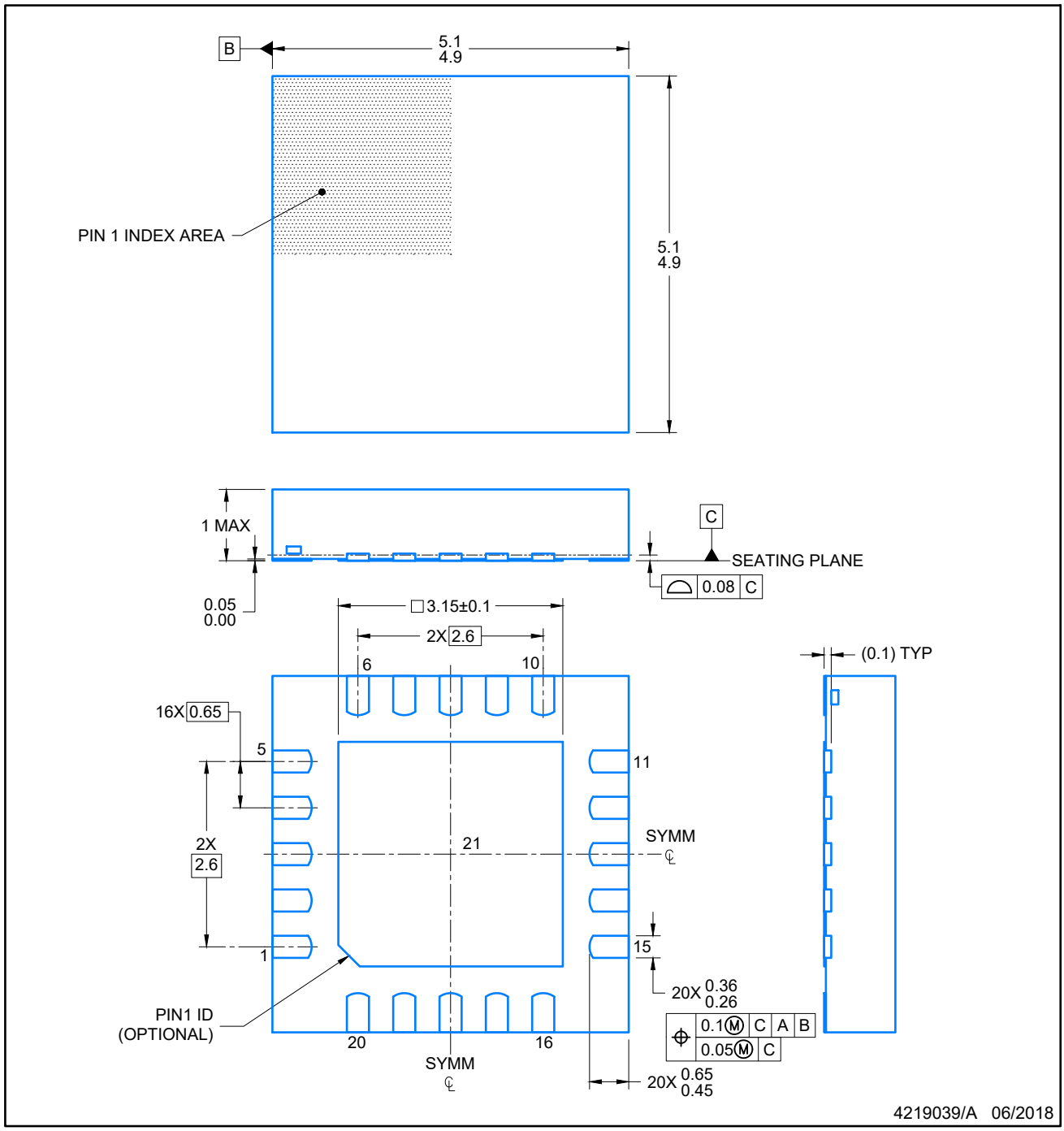

NOTES:

1. All linear dimensions are in millimeters. Any dimensions in parenthesis are for reference only. Dimensioning and tolerancing per ASME Y14.5M.
2. This drawing is subject to change without notice.
3. The package thermal pad must be soldered to the printed circuit board for optimal thermal and mechanical performance.

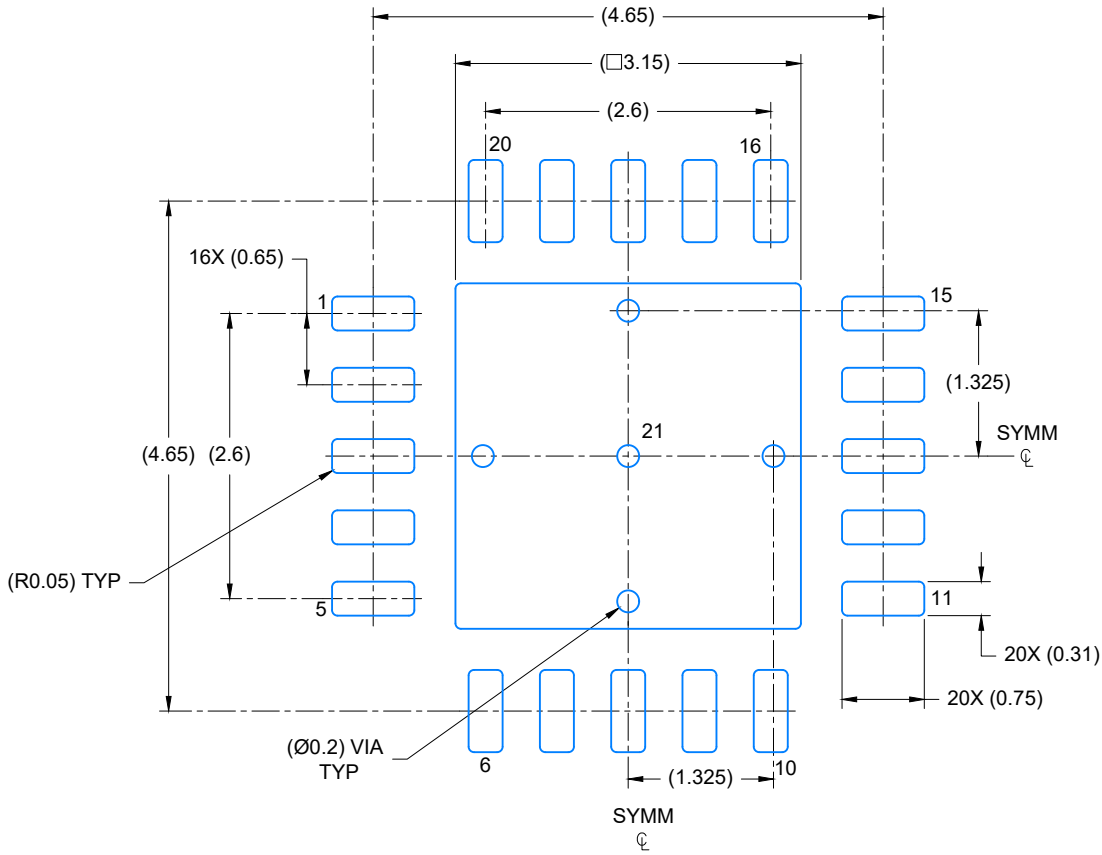

LAND PATTERN EXAMPLE

SCALE: 15X

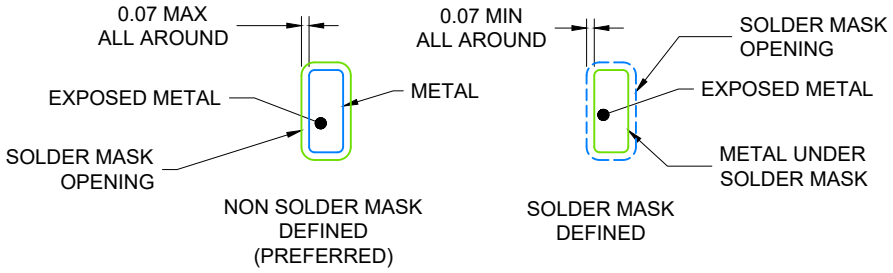

SOLDER MASK DETAILS

4219039/A 06/2018

NOTES: (continued)

4. This package is designed to be soldered to a thermal pad on the board. For more information, see Texas Instruments literature number SLUA271 (www.ti.com/lit/slua271).
5. Vias are optional depending on application, refer to device data sheet. If any vias are implemented, refer to their locations shown on this view. It is recommended that vias under paste be filled, plugged or tented.

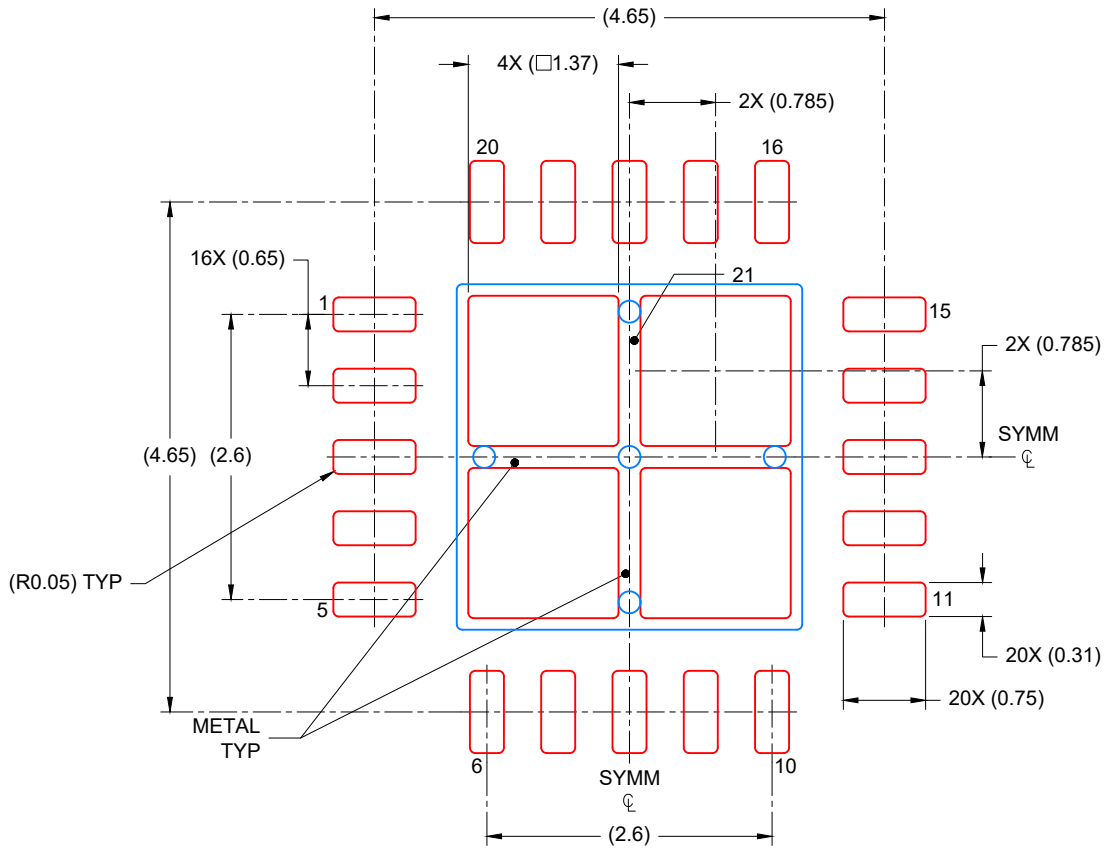

SOLDER PASTE EXAMPLE
BASED ON 0.125 mm THICK STENCIL

EXPOSED PAD
75% PRINTED COVERAGE BY AREA
SCALE: 15X

4219039/A 06/2018

NOTES: (continued)

6. Laser cutting apertures with trapezoidal walls and rounded corners may offer better paste release. IPC-7525 may have alternate design recommendations.

IMPORTANT NOTICE AND DISCLAIMER

TI PROVIDES TECHNICAL AND RELIABILITY DATA (INCLUDING DATASHEETS), DESIGN RESOURCES (INCLUDING REFERENCE DESIGNS), APPLICATION OR OTHER DESIGN ADVICE, WEB TOOLS, SAFETY INFORMATION, AND OTHER RESOURCES “AS IS” AND WITH ALL FAULTS, AND DISCLAIMS ALL WARRANTIES, EXPRESS AND IMPLIED, INCLUDING WITHOUT LIMITATION ANY IMPLIED WARRANTIES OF MERCHANTABILITY, FITNESS FOR A PARTICULAR PURPOSE OR NON-INFRINGEMENT OF THIRD PARTY INTELLECTUAL PROPERTY RIGHTS.

These resources are intended for skilled developers designing with TI products. You are solely responsible for (1) selecting the appropriate TI products for your application, (2) designing, validating and testing your application, and (3) ensuring your application meets applicable standards, and any other safety, security, regulatory or other requirements.

These resources are subject to change without notice. TI grants you permission to use these resources only for development of an application that uses the TI products described in the resource. Other reproduction and display of these resources is prohibited. No license is granted to any other TI intellectual property right or to any third party intellectual property right. TI disclaims responsibility for, and you fully indemnify TI and its representatives against any claims, damages, costs, losses, and liabilities arising out of your use of these resources.

TI’s products are provided subject to TI’s Terms of Sale, TI’s General Quality Guidelines, or other applicable terms available either on ti.com or provided in conjunction with such TI products. TI’s provision of these resources does not expand or otherwise alter TI’s applicable warranties or warranty disclaimers for TI products. Unless TI explicitly designates a product as custom or customer-specified, TI products are standard, catalog, general purpose devices.

TI objects to and rejects any additional or different terms you may propose.

Copyright © 2026, Texas Instruments Incorporated

Last updated 10/2025