TPS1689x 9V to 80V, 3.5mΩ, 20A Stackable Integrated Hotswap (eFuse) With PMBus® Digital Telemetry

1 Features

- Input operating voltage range: 9V to 80V
  - 92V absolute maximum rating
  - Withstands negative transient voltages up to –5V at output
- Integrated FET with low ON-resistance
  - R_{ON} = 3.5mΩ (typical)
- PMBus interface for telemetry, control, configuration, and debug
  - PIN/EIN/VIN/VOUT/IIN temperature and fault monitoring
  - VIN/VOUT monitoring accuracy: ±0.5%
  - Programmable overcurrent protection
    - Adjustable overcurrent threshold: 2A to 20A
    - Programmable transient overcurrent timer (OC_TIMER)
  - Programmable slew rate control (dvdt)
  - Programmable Power Good/fault/alert indication
  - Programmable overtemperature protection
  - Internal nonvolatile memory for user configuration
  - Blackbox fault recording with option to store in external EEPROM
- Fast trip response to severe overcurrent (short-circuit) events
- Precise analog load current monitoring (IMON)
  - <1% error over 50% to 100% of maximum current (T_A = 25°C)
- Small footprint: QFN 6mm × 5mm
  - IPC9592B clearance for 60V

2 Applications

- Server and high performance computing
- Network interface cards
- Graphics and hardware accelerator cards
- Datacenter switches and routers
- Input hotswap and hotplug
- Fan trays

3 Description

The TPS1689x is an integrated high current circuit protection and power management solution in a small package. The device provides multiple protection modes using very few external components and is a robust defense against overloads, short circuits and excessive inrush current. The integrated PMBus interface allows a host controller to monitor, control and configure the system in real time. Key system parameters can be read back for remote telemetry. Various protection and warning thresholds and coefficients are configurable through PMBus or stored in nonvolatile configuration memory. An integrated fast and accurate sense analog load current monitor facilitates predictive maintenance and advanced dynamic platform power management such as Intel® PSYS and PROCHOT to optimize server and data-center performance. Blackbox fault recording feature helps in debug of field failure or returns. For higher current support, TPS1689x can connect in parallel with TPS1685x. The devices are characterized for operation over a junction temperature range from –40°C to +125°C.

Package Information

PART NUMBER	PACKAGE(1)	PACKAGE SIZE(2)
TPS16890VMAR	VMA (LQFN, 23)	6mm × 5mm
TPS16890AVMAR		
TPS16890BVMAR		

(1) For all available packages, see Section 11.
(2) The package size (length × width) is a nominal value and includes pins, where applicable.

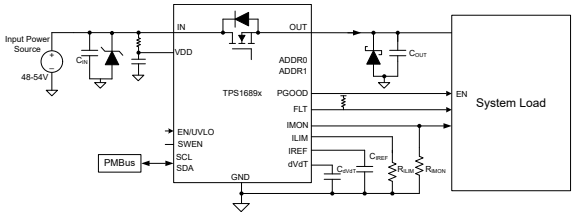

Simplified Schematic

An IMPORTANT NOTICE at the end of this data sheet addresses availability, warranty, changes, use in safety-critical applications, intellectual property matters and other important disclaimers. PRODUCTION DATA.

Table of Contents

1 Features.....1
2 Applications.....1
3 Description.....1
4 Device Comparison.....3
5 Pin Configuration and Functions.....4
6 Specifications.....6
6.1 Absolute Maximum Ratings.....6
6.2 ESD Ratings.....6
6.3 Recommended Operating Conditions.....7
6.4 Thermal Information.....7
6.5 Electrical Characteristics.....7
6.6 Telemetry.....10
6.7 PMBus and GPIO DC Characteristics.....11
6.8 Logic Interface.....11
6.9 Timing Requirements.....12
6.10 Switching Characteristics.....12
6.11 Typical Characteristics.....14
7 Detailed Description.....19
7.1 Overview.....19
7.2 Functional Block Diagram.....20
7.3 Feature Description.....20
7.4 Device Functional Modes.....102
8 Application and Implementation.....103
8.1 Application Information.....103
8.2 Typical Application: 54V, 2kW Power Path Protection with PMBus® Interface in Datacenter Servers.....108
8.3 Power Supply Recommendations.....115
8.4 Layout.....116
9 Device and Documentation Support.....119
9.1 Third-Party Products Disclaimer.....119
9.2 Documentation Support.....119
9.3 Receiving Notification of Documentation Updates.....119
9.4 Support Resources.....119
9.5 Trademarks.....119
9.6 Electrostatic Discharge Caution.....119
9.7 Glossary.....119
10 Revision History.....119
11 Mechanical, Packaging, and Orderable Information.....120

Copyright © 2026 Texas Instruments Incorporated

4 Device Comparison

Table 4-1. Device Comparison Table

PART NUMBER	FIXED FAST TRIP	DEFAULT VIN_OV_FLT THRESHOLD	DEFAULT PG_DVDT_DELAY	DEFAULT INS_DLY	NUMBER OF ONE-TIME PROGRAMMABLE BANKS
TPS16890	73A	0xAF ($V_{IN-OVPR}$ = 60V)	DEVICE_CONFIG[15] = 0 PG_DVDT_DLY = 100µs	0x00 (digital insertion delay = 0ms)	6
TPS16890A	83A	0xC5 ($V_{IN-OVPR}$ = 65.4V)	DEVICE_CONFIG[15] = 0 PG_DVDT_DLY = 100µs	0x00 (digital insertion delay = 0ms)	5
TPS16890B	83A	0xC5 ($V_{IN-OVPR}$ = 65.4V)	DEVICE_CONFIG[15] = 1 PG_DVDT_DLY = 35ms	0x00 (digital insertion delay = 0ms)	5

Copyright © 2026 Texas Instruments Incorporated

5 Pin Configuration and Functions

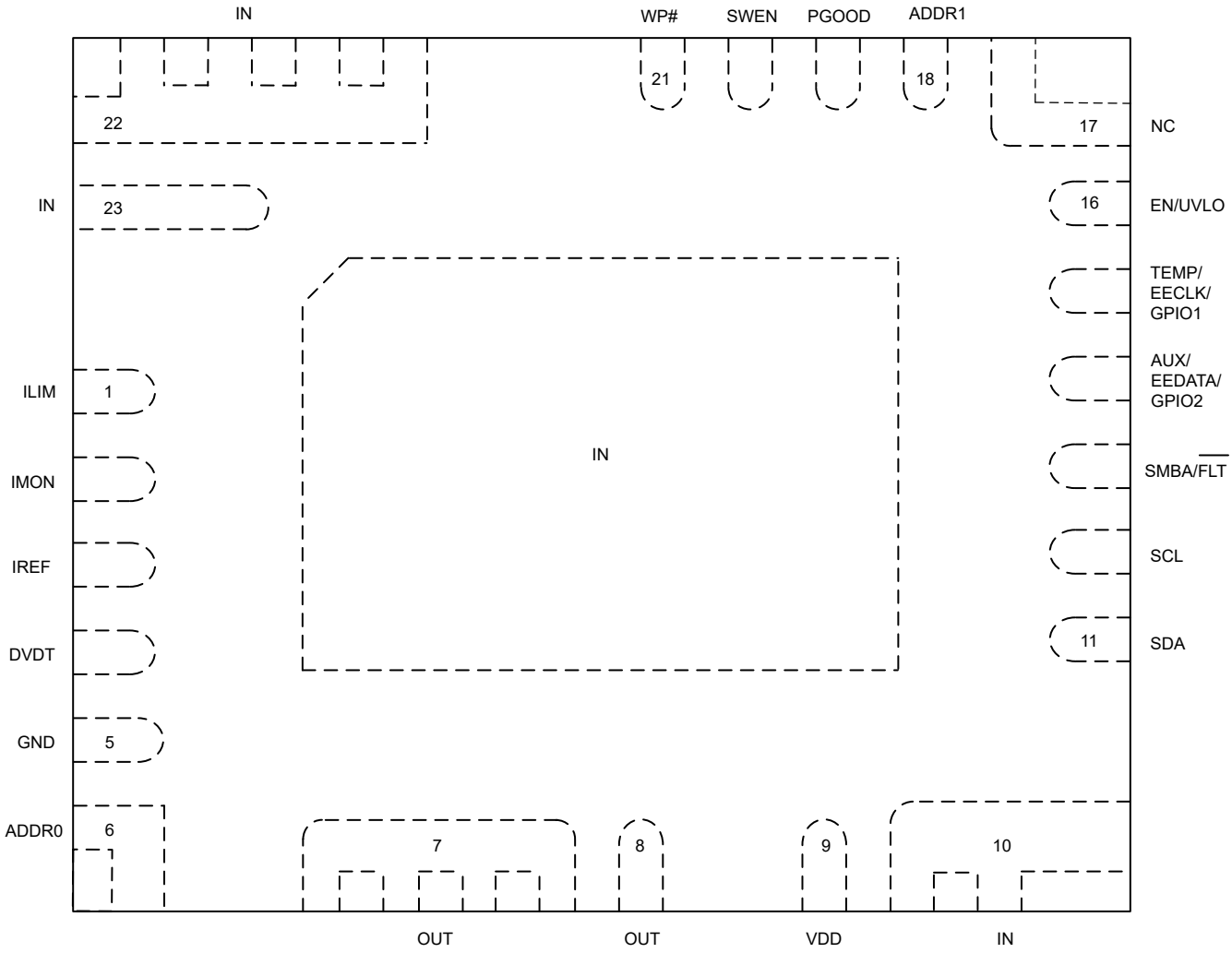

Figure 5-1. TPS1689x VMA Package 23-Pin LQFN Top View

Table 5-1. Pin Functions

PIN		TYPE[(1)]	DESCRIPTION
NAME	NO.		
ADDR0	6	I	I^2C Address Configuration Pin. Pin strap to open/short to ground or resistor to ground to generate different address combinations.
ADDR1	18	I	I^2C Address Configuration Pin. Pin strap to open/short to ground or resistor to ground to generate different address combinations.
AUX/EEDATA/ GPIO2	14	I/O	Auxiliary input for ADC or External EEPROM Data IO or General-Purpose Digital IO. Pin function is configurable through AUX/TEMP/EEDATA/EECLK/ GPIO register.
DVDT	4	O	Startup Output Slew Rate control pin. Leave it open to allow fastest startup. Connect capacitor to ground to slow down the slew rate to manage inrush current.
EN/UVLO	16	I	Active High Enable input. Connect resistor divider from input supply to set the Undervoltage threshold. **Do not leave floating.**
GND	5	G	Device Ground reference pin. Connect to System Ground.

Copyright © 2026 Texas Instruments Incorporated

Table 5-1. Pin Functions (continued)

PIN		TYPE(1)	DESCRIPTION
NAME	NO.		
ILIM	1	O	An external resistor from this pin to GND sets the active current sharing threshold during steady state. This pin also serves as individual eFuse current monitor output during steady state. **Do not leave floating.**
IMON	2	O	An external resistor from this pin to GND sets the overcurrent/circuit-breaker threshold and fast trip threshold during steady state. This pin also acts as a fast and accurate analog output load current monitor signal during steady state. **Do not leave floating.**
IN	10, 22, 23, Exposed Pad	P	Power Input. Must be soldered to input power plane uniformly to establish proper heat dissipation and to maintain optimal current distribution through the device.
IREF	3	O	Programmable reference voltage for overcurrent protection block, generated using internal DAC. Can be used to drive reference voltage for other secondary devices in primary/secondary parallel configurations.
NC	17	-	No internal Connection.
OUT	7, 8	P	Power output. Must be soldered to the output power plane uniformly for proper heat dissipation
PGOOD	19	O	Open-drain active high power good output. This pin has weak internal pull-up to internal supply voltage.
SCL	12	I	I^2C Clock Line for PMBus interface. Needs external Pull-up resistor.
SDA	11	I/O	I^2C Data Line for PMBus interface. Needs external Pull-up resistor.
$\overline{\text{SMBA}}$/$\overline{\text{FLT}}$	13	O	Active low FAULT or SMBus alert output. Pin function is configurable through SMBA_FLT_CONFIG register.
SWEN	20	I/O	Open drain signal to indicate and control power switch ON and OFF status. This facilitates synchronization of multiple devices in a parallel chain. This pin has internal Pull-up.
TEMP/EECLK/ GPIO1	15	I/O	Analog temperature output. Can be tied together with TEMP outputs of multiple devices in a parallel configuration to get the peak temperature of the chain, or External EEPROM Clock output or General-Purpose Digital IO. Pin function is configurable through AUX/TEMP/EEDATA/EECLK/GPIO register.
VDD	9	P	Controller power input pin. Can be used to power the internal control circuitry with a filtered and stable supply which is not affected by system transients. Connect this pin to VIN through a series resistor and add a decoupling capacitor to GND.
WP#	21	I	Write Protect: Connect this pin to GND to disable PMBus write access to the device completely. When this pin is floating, PMBus write access is controlled by the MFR_WRITE_PROTECT command.

(1) I = Input, O = Output, I/O = Input or Output, G = Ground, P = Power.

Copyright © 2026 Texas Instruments Incorporated

6 Specifications

6.1 Absolute Maximum Ratings

over operating free-air temperature range (unless otherwise noted)[1]

Parameter		Pin	MIN	MAX	UNIT
V_{INMAX}, V_{DDMAX}	Maximum Input and Supply Voltage (–40℃ ≤ T_J ≤ 125℃)	IN, VDD	–0.3	90	V
$V_{INMAX,25}$, $V_{DDMAX,25}$	Maximum Input and Supply Voltage (25℃ ≤ T_J ≤ 125℃)	IN, VDD	–0.3	92	V
$V_{INMAX,25}$, $V_{DDMAX,25, PLS}$	Maximum Input and Supply Voltage (10µs, 25℃ ≤ T_J ≤ 125℃) (V_{VDD} > V_{UVPR})	IN, VDD	–0.3	94	V
V_{OUTMAX}	Maximum Output Voltage	OUT	–5[2]	Min(92V, VIN + 0.3)	
V_{IN} - V_{OUT}	Maximum difference between IN and OUT	IN, OUT	-0.3	90	V
$V_{IILIMMAX}$	Maximum ILIM Pin Voltage	ILIM	–0.3	6	V
$V_{IMONMAX}$	Maximum IMON Pin Voltage	IMON	–0.3	6	V
$V_{ADDRMAX}$	Maximum ADDR1, ADDR0 Pin Voltage	ADDR1, ADDR0	–0.3	6	V
V_{I2CMAX}	Maximum SCL, SDA Pin Voltage	SCL, SDA	–0.3	6	V
$V_{IREFMAX}$	Maximum IREF Pin Voltage	IREF	–0.3	6	V
$V_{DVDTMAX}$	Maximum DVDT Pin Voltage	DVDT	–0.3	6	V
V_{AUXMAX}	Maximum AUX/EEDATA/GPIO2 Pin Voltage	AUX/EEDATA/ GPIO2	–0.3	6	V
$V_{SWENMAX}$	Maximum SWEN Pin Voltage	SWEN	–0.3	6	V
$I_{SWENMAX}$	Maximum SWEN Pin Sink	SWEN		10	mA
V_{ENMAX}	Maximum EN/UVLO Pin Voltage	EN/UVLO	–0.3	6	V
$V_{FLTBMAX}$	Maximum $\overline{SMBA}/\overline{FLT}$ Pin Voltage	$\overline{SMBA}/\overline{FLT}$	–0.3	6	V
$I_{FLTBMAX}$	Maximum $\overline{SMBA}/\overline{FLT}$ Pin Sink Current	$\overline{SMBA}/\overline{FLT}$		10	mA
$V_{PGOODMAX}$	Maximum PGOOD Pin Voltage	PGOOD	–0.3	6	V
$I_{PGOODMAX}$	Maximum PGOOD Pin Sink Current	PGOOD		10	mA
$V_{TEMPMAX}$	Maximum TEMP/EECLK/GPIO1 Pin Voltage	TEMP/EECLK/ GPIO1	–0.3	6	V
I_{MAX}	Maximum Continuous Switch Current	IN to OUT	Internally Limited		A
T_{JMAX}	Junction temperature		Internally Limited		°C
T_{LEAD}	Maximum Soldering Temperature			300	°C
T_{STG}	Storage temperature		–65	150	°C

(1) Stresses beyond those listed under *Absolute Maximum Rating* may cause permanent damage to the device. These are stress ratings only, which do not imply functional operation of the device at these or any other conditions beyond those indicated under *Recommended Operating Condition*. Exposure to absolute-maximum-rated conditions for extended periods may affect device reliability.
(2) During FET OFF condition for negative transients up-to 10µs and V_{VDD} > V_{UVP}

6.2 ESD Ratings

			VALUE	UNIT
$V_{(ESD)}$	Electrostatic discharge	Human body model (HBM), per ANSI/ESDA/JEDEC JS-001, all pins[1]	±1500	V
		Charged device model (CDM), per JEDEC specificationJESD22-C101, all pins[2]	±500	

(1) JEDEC document JEP155 states that 500V HBM allows safe manufacturing with a standard ESD control process.
(2) JEDEC document JEP157 states that 250V CDM allows safe manufacturing with a standard ESD control process.

Copyright © 2026 Texas Instruments Incorporated

6.3 Recommended Operating Conditions

over operating free-air temperature range (unless otherwise noted)

Parameter		Pin	MIN	MAX	UNIT
V_{IN}	Input Voltage Range	IN	9	80	V
V_{DD}	Supply Voltage Range	VDD	9	80	V
V_{OUT}	Output Voltage Range	OUT		V_{IN}	V
$V_{EN/UVLO}$	Enable Pin Voltage Range	EN/UVLO		5	V
V_{dVdT}	dVdT Pin Cap Voltage Rating	dVdT		4	V
V_{PGOOD}	PGOOD Pin Pull-up Voltage Range	PG		5	V
V_{I2C}	I^2C Pull-up Voltage Range	SCL, SDA	1.8	5	V
C_{I2C}	I^2C bus capacitance	SCL, SDA		200	pF
$V_{TEMP/EECLK/GPIO1}$	TEMP/EECLK/GPIO1 Pin Voltage Range	TEMP/EECLK/ GPIO1		5	V
$V_{\overline{SMBA}/\overline{FLT}}$	SMBA/$\overline{FLT}$ Pin Pull-up Voltage Range	$\overline{SMBA}/\overline{FLT}$		5	V
V_{SWEN}	SWEN Pin Pull-up Voltage Range	SWEN		5	V
V_{AUX}	AUX Pin Voltage Rating	AUX		1.2	V
V_{IREF}	IREF Pin Voltage Range	IREF	0.3	1.2	V
V_{ILIM}	ILIM Pin Voltage Range	ILIM		0.44	V
V_{IMON}	IMON Pin Voltage Range	IMON		1.2	V
C_{IN}	Capacitance on IN pins	IN	10		nF
C_{OUT}	Capacitance on OUT pins	OUT	10		µF
dV_{IN}/dt	Slew rate on IN pins	IN		100	V/µs
I_{MAX}	Continuous Switch Current	IN to OUT		20	A
$I_{MAX, Pulse}$	Peak Output Current for ≤10ms duration, T_A ≤ 70 °C	IN to OUT		24	A
T_J	Junction temperature		–40	125	°C

6.4 Thermal Information

THERMAL METRIC		TPS1689x LQFN PINS	UNIT
$R_{\theta JA}$	Junction-to-ambient thermal resistance	21.6	°C/W
Ψ_{JT}	Junction-to-top characterization parameter	0.9	°C/W
Ψ_{JB}	Junction-to-board characterization parameter	8.9	°C/W

6.5 Electrical Characteristics

–40°C ≤ T_J ≤ +125°C, V_{IN} = V_{DD} = 50V, OUT = Open, R_{ILIM} = 931Ω, R_{IMON} = 2.55kΩ, V_{IREF} = 1V , $\overline{FLT}$ = 10kΩ pull-up to 5V, PGOOD = 10kΩ pull-up to 5V, C_{OUT} = 10µF, C_{IN} = 10nF, dVdT = Open , $V_{EN/UVLO}$ = 2V, TEMP/EECLK/GPIO1 = Open, AUX/EEDATA/GPIO2 = Open, ADDR0 = Open, ADDR1 = Open, SCL = 330Ω pull-up to 3.3V, SDA = 330Ω pull-up to 3.3V. (All voltages referenced to GND, (unless otherwise noted))

PARAMETER		TEST CONDITIONS	MIN	TYP	MAX	UNIT
INPUT SUPPLY (VDD)						
V_{IN}	Input voltage range		9		80	V
V_{DD}	Input voltage range		V_{IN}		80	V
$I_{QON(VDD)}$	V_{DD} ON state quiescent current	V_{DD} > V_{UVPR}, V_{EN} ≥ V_{UVLOR}, V_{OVP} < V_{OVPF}		4	6	mA
V_{UVPR}	V_{DD} Undervoltage Protection Threshold Rising	V_{DD} Rising		8.5	8.9	V

6.5 Electrical Characteristics (continued)

–40°C ≤ T_J ≤ +125°C, V_{IN} = V_{DD} = 50V, OUT = Open, R_{ILIM} = 931Ω, R_{IMON} = 2.55kΩ, V_{IREF} = 1V , $\overline{FLT}$ = 10kΩ pull-up to 5V, PGOOD = 10kΩ pull-up to 5V, C_{OUT} = 10µF, C_{IN} = 10nF, dVdT = Open , $V_{EN/UVLO}$ = 2V, TEMP/EECLK/GPIO1 = Open, AUX/EEDATA/GPIO2 = Open, ADDR0 = Open, ADDR1 = Open, SCL = 330Ω pull-up to 3.3V, SDA = 330Ω pull-up to 3.3V. (All voltages referenced to GND, (unless otherwise noted))

PARAMETER		TEST CONDITIONS	MIN	TYP	MAX	UNIT
V_{UVPF}	V_{DD} Undervoltage Protection Threshold falling	V_{DD} Falling	6.7	7.05		V
V_{UVPHYS}	UVP Hysteresis VDD			1.5		V
INPUT SUPPLY (IN)						
$V_{UVLOR(VIN)}$	VIN undervoltage threshold rising	V_{IN} Rising, VIN_UV_FLT = 0x71		40.5	41.2	V
$V_{UVLOF(VIN)}$	VIN undervoltage threshold falling	V_{IN} Falling, VIN_UV_FLT = 0x71	37	38.5		V
$I_{QON(VIN)}$	V_{IN} ON state quiescent current	V_{EN} ≥ V_{UVLOR}		1.69		mA
$I_{QOFF(VIN)}$	V_{IN} OFF state current	V_{SDR} < V_{EN} < V_{UVLO}		1.69		mA
$I_{SD(VIN)}$	V_{IN} shutdown current	V_{EN} < V_{SDF}		1.69		mA
$I_{LKG(VOUT)}$	V_{OUT} leakage current	V_{EN} < V_{UVLO}, SWEN=L, VOUT = 0V		20		µA
$I_{LKG(VOUT)}$	V_{OUT} leakage current	V_{EN} > V_{UVLO}, SWEN=L, VOUT = 0V		220		µA
ENABLE / UNDERVOLTAGE LOCKOUT (EN/UVLO)						
V_{UVLOR}	EN/UVLO pin voltage threshold for turning on, rising	EN/UVLO Rising	1.18	1.21	1.24	V
V_{UVLOF}	EN/UVLO pin voltage threshold for turning off and engaging QOD, falling (primary device)	EN/UVLO Falling	1	1.12	1.14	V
$V_{UVLOHYS}$	UVLO Hysteresis			89		mV
V_{SDF}	Shutdown threshold	EN/UVLO Falling	0.4	0.42		V
V_{SDR}	Shutdown threshold	EN/UVLO Rising		0.5	0.55	V
I_{ENLKG}	EN/UVLO pin leakage current		-100		100	nA
OVERVOLTAGE PROTECTION (IN)						
$V_{IN-OVPR}$	IN overvoltage protection threshold (rising)	VIN_OV_FLT = 0xB1	58.5	60	61.5	V
$V_{IN-OVPF}$	IN overvoltage protection threshold (falling)	VIN_OV_FLT = 0xB1	55.57	57	58.43	V
$V_{IN-OVPHYS}$	IN overvoltage protection threshold (Hysterisis)	VIN_OV_FLT = 0xB1		3		V
ON-RESISTANCE (IN - OUT)						
R_{ON}	ON state resistance	I_{OUT} = 12A; T_J = 25°C		3.5	5.55	mΩ
R_{ON}	ON state resistance	I_{OUT} = 12A; T_J = -40°C to 125°C			6.1	mΩ
CURRENT LIMIT REFERENCE (IREF)						
V_{IREF}	Current Limit Reference DAC output voltage	V_{IREF} = 0x32 (Default)	0.99	1	1.01	V
V_{IREF}	Current Limit Reference DAC output voltage	V_{IREF} = 0x00	0.29	0.3	0.31	V
V_{IREF}	Current Limit Reference DAC output voltage	V_{IREF} = 0x3F	1.16	1.182	1.2	V
CURRENT LIMIT (ILIM)						
$G_{ILIM(LIN)}$	Current Monitor Gain (ILIM:IOUT) vs. IOUT.	Device in steady state (PG asserted), I_{OUT} = 12A	17	18	20.6	µA/A
$I_{start-up\ peak}$	Peak Current at Startup	V_{OUT} > V_{FB}, GHI deasserted; VIN ≤ 60V		0.5		A
V_{FB}	Foldback voltage			2		V
OUTPUT CURRENT MONITOR AND OVERCURRENT PROTECTION (IMON)						
G_{IMON}	Current Monitor Gain (IMON:IOUT)	Device in steady state (PG asserted), I_{OUT} = 12A	17.7	18.18	18.49	µA/A
G_{IMON}	Current Monitor Gain (IMON:IOUT)	Device in steady state (PG asserted), I_{OUT} = 4A	17.4	18.31	19.1	µA/A

Copyright © 2026 Texas Instruments Incorporated

6.5 Electrical Characteristics (continued)

–40°C ≤ T_J ≤ +125°C, V_{IN} = V_{DD} = 50V, OUT = Open, R_{ILIM} = 931Ω, R_{IMON} = 2.55kΩ, V_{IREF} = 1V , $\overline{FLT}$ = 10kΩ pull-up to 5V, PGOOD = 10kΩ pull-up to 5V, C_{OUT} = 10µF, C_{IN} = 10nF, dVdT = Open , $V_{EN/UVLO}$ = 2V, TEMP/EECLK/GPIO1 = Open, AUX/EEDATA/GPIO2 = Open, ADDR0 = Open, ADDR1 = Open, SCL = 330Ω pull-up to 3.3V, SDA = 330Ω pull-up to 3.3V. (All voltages referenced to GND, (unless otherwise noted))

PARAMETER		TEST CONDITIONS	MIN	TYP	MAX	UNIT
I_{OCP}	I_{OUT} Current limit trip (Circuit-Breaker) threshold	R_{IMON} = 2.55kΩ, V_{IREF} = 1V	21.0	21.7	22.3	A
SHORT-CIRCUIT PROTECTION						
I_{FFT}	Fixed fast trip threshold in steady state (TPS16890, TPS1689C)	PG asserted High		73		A
I_{FFT}	Fixed fast trip threshold in steady state (TPS1689A, TPS1689B)	PG asserted High		83		A
I_{FFT}	Fixed fast trip threshold in steady state (TPS16890, TPS1689C)	PG asserted High; T_J = 25°C to 125°C	55			A
I_{FFT}	Fixed fast trip threshold in steady state (TPS1689A, TPS1689B)	PG asserted High; T_J = 25°C to 125°C	65			A
I_{SFT}	Scalable fast trip current:I_{OCP} ratio	DEVICE_CONFIG [12:11] = 11		1.5		A/A
I_{SFT}	Scalable fast trip current:I_{OCP} ratio	DEVICE_CONFIG [12:11] = 10		2		A/A
I_{SFT}	Scalable fast trip current:I_{OCP} ratio	DEVICE_CONFIG [12:11] = 01		2.5		A/A
$SFT_{(SAT)}$	Scalable fast trip current:$I_{start\text{-}up\ peak}$ ratio	During Powerup, PGOOD Low		2		A/A
ACTIVE CURRENT SHARING						
$R_{ON(ACS)}$	R_{ON} during Active current sharing	V_{ILIM} > 1.1 × (1/3) × V_{IREF}		4.38	7	mΩ
$G_{IMON(ACS)}$	IMON:IOUT ratio during active current limiting	PG asserted High, V_{ILIM} > 1.1 × V_{IREF}	17.24	18.49	19.84	µA/A
$CL_{REF(ACS)}$	Ratio of Active current sharing trigger threshold to steady state circuit-breaker threshold	PG asserted High		36.67		%
INRUSH CURRENT PROTECTION (DVDT)						
I_{DVDT}	dVdt Pin Charging Current	DEVICE_CONFIG[10:9] = 11	2.4	3	3.6	µA
I_{DVDT}	dVdt Pin Charging Current	DEVICE_CONFIG[10:9] = 10	1.5	2	2.5	µA
I_{DVDT}	dVdt Pin Charging Current	DEVICE_CONFIG[10:9] = 01	0.75	1	1.25	µA
I_{DVDT}	dVdt Pin Charging Current	DEVICE_CONFIG[10:9] = 00	0.35	0.5	0.65	µA
G_{DVDT}	dVdt Gain	0.4V < V_{dVdt} < 2.4V	22	25	28	V/V
R_{DVDT}	dVdt Pin to GND Discharge Resistance			500		Ω
GHI						
$V_{GS(GHI)}$ Rising	G-S Threshold when GHI/PG is asserted			7		V
$R_{ON(GHI)}$	Ron When GHI/PG is asserted			3.8		mΩ
QUICK OUTPUT DISCHARGE (QOD)						
I_{QOD}	Quick Output Discharge pull-down current	$V_{SD(R)}$ < V_{EN} < V_{UVLO}, V_{IN} = 50V		22		mA
TEMPERATURE SENSOR OUTPUT (TEMP)						
G_{TMP}	TEMP sensor gain	V_{IN} = 50V		2.73		mV/°C
V_{TMP}	TEMP pin output voltage	T_J = 25 °C, V_{IN} = 50V	670	678	690	mV
I_{TMPSRC}	TEMP pin sourcing current	V_{IN} = 50V		119		µA
I_{TMPSNK}	TEMP pin sinking current	V_{IN} = 50V		10		µA
OVERTEMPERATURE PROTECTION (OTP)						
TSD	Absolute Thermal Shutdown Rising Threshold	T_J Rising, , V_{IN} = 50V		150		°C
TSD_{HYS}	Absolute Thermal shutdown hysteresis	T_J Falling, V_{IN} = 50V		13		°C
FET HEALTH MONITOR						
V_{DSFLT}	FET D-S Fault Threshold	SWEN = L, V_{IN} = 50V		0.5		V

Copyright © 2026 Texas Instruments Incorporated

6.5 Electrical Characteristics (continued)

–40°C ≤ T_J ≤ +125°C, V_{IN} = V_{DD} = 50V, OUT = Open, R_{ILIM} = 931Ω, R_{IMON} = 2.55kΩ, V_{IREF} = 1V , $\overline{FLT}$ = 10kΩ pull-up to 5V, PGOOD = 10kΩ pull-up to 5V, C_{OUT} = 10µF, C_{IN} = 10nF, dVdT = Open , $V_{EN/UVLO}$ = 2V, TEMP/EECLK/GPIO1 = Open, AUX/EEDATA/GPIO2 = Open, ADDR0 = Open, ADDR1 = Open, SCL = 330Ω pull-up to 3.3V, SDA = 330Ω pull-up to 3.3V. (All voltages referenced to GND, (unless otherwise noted))

PARAMETER		TEST CONDITIONS	MIN	TYP	MAX	UNIT
V_{DSOK}	FET D-S Fault Recovery Threshold	SWEN = L, V_{IN} = 50V		0.64		V
ADDRESS SELECT (ADDR0/ADDR1)						
I_{ADDRx}	ADDR0 pin pull-up current		3.85	5.05	6.25	µA
	ADDR1 pin pull-up current		3.85	5.05	6.25	µA
I_{OC_BKP}	Back-up overcurrent protection threshold	IMON short to GND		38.3		A

6.6 Telemetry

Over operating free-air temperature range (unless otherwise noted)

Parameter	TEST CONDITIONS	MIN	TYP	MAX	UNIT
Telemetry					
ADC Resolution			10		bits
ADC Voltage reference (V_{REF})	Need test mode to bring out ADC reference		1.95		V
Sampling Rate	ADC High Speed mode (Default)		460		KHz
Sampling Rate	ADC high performance mode (DEVICE_CONFIG[3] = 1)		150		KHz
DNL	ADC high performance mode (DEVICE_CONFIG[3] = 1)		0.5	0.75	LSB
INL	ADC high performance mode (DEVICE_CONFIG[3] = 1)			3.5	LSB
V_{AUX} Absolute error	ADC High Speed mode (Default), V_{AUX} = 1.95V (Full-scale) , 1 sample	-1.5		1.5	%
V_{AUX} Absolute error	ADC High Perf mode, V_{AUX} = 1.95V (Full-scale) , 1 sample	-0.8		0.8	%
V_{AUX} Absolute error	ADC High Speed mode (Default), V_{AUX} = 1.95V (Full-scale) , 128 sample average	-0.85		0.85	%
V_{AUX} Absolute error	ADC High Perf mode, V_{AUX} = 1.95V (Full-scale) , 128 sample average	-0.5		0.5	%
V_{IN} Absolute error	ADC High Perf mode, V_{IN} = 43.875V, 1 sample	-1.2		1.2	%
V_{IN} Absolute error	ADC High Perf mode, V_{IN} = 43.875V, 128 sample average	-1		1	%
V_{OUT} Absolute error	ADC High Perf mode, V_{OUT} = 43.875V, 1 sample	-1.2		1.2	%
V_{OUT} Absolute error	ADC High Perf mode, V_{OUT} = 43.875V, 128 sample average	-1		1	%
V_{TEMP} Absolute error	ADC high performance mode, V_{TEMP} = 1.95V (Full-scale) , 1 sample		±5		℃
V_{TEMP} Absolute error	ADC high performance mode, V_{TEMP} = 1.95V (Full-scale) , 128 samples average		±3		℃
V_{IMON} Absolute error	ADC high performance mode, V_{IMON} = 1V, 1 sample	-1		1	%
V_{IMON} Absolute error	ADC high performance mode, V_{IMON} = 1V, 128 sample average	-0.8		0.8	%
P_{IN} Absolute error	ADC high performance mode, V_{IN} = 50V, V_{IMON} = 0.93V, 1 sample		±2.5		%
P_{IN} Absolute error	ADC high performance mode, V_{IN} = 50V, V_{IMON} = 0.93V, 128 sample average		±1.75		%

Copyright © 2026 Texas Instruments Incorporated

6.6 Telemetry (continued)

Over operating free-air temperature range (unless otherwise noted)

Parameter	TEST CONDITIONS	MIN	TYP	MAX	UNIT
E_{IN} Absolute error	ADC high performance mode Accumulated energy over 5ms window, V_{IN} = 50V DC, V_{IMON} = 0.93V		±2		%

6.7 PMBus and GPIO DC Characteristics

over operating free-air temperature range (unless otherwise noted)

PARAMETER		TEST CONDITIONS	MIN	TYP	MAX	UNIT
GPIOx						
V_{OL}	GPIOx output logic low	Pin configured as output, de-asserted Low. Sink current = 20mA.			0.27	V
V_{OH}	GPIOx output logic high	Pin configured as output, asserted high	1.7			V
R_{GPIO}	GPIOx pin pull-down resistance	Pin configured as output, de-asserted Low			13	Ω
I_{GPIO}	GPIOx pin leakage current	Pin configured as output, asserted high			1	uA
V_{IH}	GPIOx input logic high	Pin configured as input	1.6			V
V_{IL}	GPIOx input logic low	Pin configured as input			0.75	V
PMBus (SCL/SDA)						
$I_{LK\text{-}PMB\text{-}BUS}$	Input leakage per PMBus segment		-200		200	µA
$I_{LK\text{-}PMB\text{-}PIN}$	Input leakage for PMBus pins - SCL		-1.5		1	µA
$I_{LK\text{-}PMB\text{-}PIN}$	Input leakage for PMBus pins - SDA		-1.5		1	µA
V_{PULLUP_PMBus}	PMBus interface pull ups		1.62		3.63	V
V_{IL_PMBus}	SDA Input logic low				0.8	V
V_{IL_PMBus}	SCL Input logic low				0.8	V
V_{IH_PMBus}	SCL Input logic high		1.35			V
V_{IH_PMBus}	SDA Input logic high		1.35			V
V_{HYST_PMBus}	Hysteresis voltage SCL		80			mV
V_{HYST_PMBus}	Hysteresis voltage SDA		80			mV
V_{OL_PMBus}	Low-level output voltage - SCL	I_{OL} = -20mA			0.4	V
V_{OL_PMBus}	Low-level output voltage - SDA	I_{OL} = -20mA			0.4	V

6.8 Logic Interface

–40°C ≤ T_J ≤ +125°C, VIN = V_{DD} = 45V to 60V, OUT = Open, R_{ILIM} = 931Ω R_{IMON} = 2.55kΩ, V_{IREF} = 1V , $\overline{FLT}$ = 33kΩ pull-up to 3.3V, PGOOD = 33kΩ pull-up to 3.3V, C_{OUT} = 10 µF, C_{IN} = 10nF, dVdT = Open , $V_{EN/UVLO}$ = 2V, TEMP/EECLK/GPIO1 = Open, AUX/EEDATA/GPIO2 = Open, ADDR0 = Open, ADDR1 = Open, SCL = 330Ω pull-up to 3.3V, SDA = 330Ω pull-up to 3.3V. (All voltages referenced to GND, (unless otherwise noted))

PARAMETER		TEST CONDITIONS	MIN	TYP	MAX	UNIT
WPB						
I_{WPBLKG}	WPB pin leakage current		-2.5		2.5	uA
V_{IH_WPB}	WPB input logic high		2.15			V
V_{IL_WPB}	WPB input logic low				0.4	V
SWEN						
R_{SWEN}	SWEN pin pull-down resistance	SWEN de-asserted Low		6.8		Ω

Copyright © 2026 Texas Instruments Incorporated

6.8 Logic Interface (continued)

–40°C ≤ T_J ≤ +125°C, VIN = V_{DD} = 45V to 60V, OUT = Open, R_{ILIM} = 931Ω R_{IMON} = 2.55kΩ, V_{IREF} = 1V , $\overline{FLT}$ = 33kΩ pull-up to 3.3V, PGOOD = 33kΩ pull-up to 3.3V, C_{OUT} = 10 µF, C_{IN} = 10nF, dVdT = Open , $V_{EN/UVLO}$ = 2V, TEMP/EECLK/GPIO1 = Open, AUX/EEDATA/GPIO2 = Open, ADDR0 = Open, ADDR1 = Open, SCL = 330Ω pull-up to 3.3V, SDA = 330Ω pull-up to 3.3V. (All voltages referenced to GND, (unless otherwise noted))

PARAMETER		TEST CONDITIONS	MIN	TYP	MAX	UNIT
FAULT INDICATION (FLTB)						
R_{FLTB}	$\overline{FLT}$ pin pull-down resistance	$\overline{FLT}$ asserted Low		6.6		Ω
$I_{FLTBLKG}$	$\overline{FLT}$ pin leakage current	$\overline{FLT}$ de-asserted High	-0.1		0.1	µA
POWER GOOD INDICATION (PG)						
R_{PG}	PG pin pull-down resistance	PG de-asserted Low		6.9		Ω
I_{PGKG}	PG pin leakage current	PG asserted High	-1.5		1.5	uA

6.9 Timing Requirements

–40°C ≤ T_J ≤ +125°C, V_{IN} = V_{DD} = 50V, OUT = Open, R_{ILIM} = 931Ω, R_{IMON} = 2.55kΩ, V_{IREF} = 1V , $\overline{FLT}$ = 10kΩ pull-up to 5V, PGOOD = 10kΩ pull-up to 5V, C_{OUT} = 10µF, C_{IN} = 10nF, dVdT = Open , $V_{EN/UVLO}$ = 2V, TEMP/EECLK/GPIO1 = Open, AUX/EEDATA/GPIO2 = Open, ADDR0 = Open, ADDR1 = Open, SCL = 330Ω pull-up to 3.3V, SDA = 330Ω pull-up to 3.3V. (All voltages referenced to GND, (unless otherwise noted))

PARAMETER		TEST CONDITIONS	MIN	TYP	MAX	UNIT
t_{OVP}	Overvoltage protection response time	V_{OVP} > V_{OVPR} V to SWEN↓		1.5		µs
t_{Insdly}	Insertion delay	INS_DLY = 0x00, $V_{EN/UVLO}$ > V_{UVLOR}, V_{DD} > V_{UVPR} to SWEN↑		16		ms
		INS_DLY = 0x07, $V_{EN/UVLO}$ > V_{UVLOR}, V_{DD} > V_{UVPR} to SWEN↑		516		ms
t_{FFT}	Fixed Fast-Trip response time Hard Short	V_{DS} > V_{DSCOMP} to I_{OUT}↓		214		ns
t_{SFT}	Scalable Fast-Trip response time	I_{OUT} > 2.5x I_{OCP} to I_{OUT}↓		400		ns
t_{ITIMER}	Overcurrent blanking interval	I_{OUT} = 1.5x I_{OCP}, OC_TIMER = 0x00		0		ms
t_{ITIMER}	Overcurrent blanking interval	I_{OUT} = 1.5x I_{OCP}, OC_TIMER = 0x14 (Default)		3.2		ms
t_{ITIMER}	Overcurrent blanking interval	I_{OUT} = 1.5x I_{OCP}, OC_TIMER = 0xFF		40.8		ms
t_{RST}	Auto-Retry Interval	RETRY_CONFIG[2:0] = 100		800		ms
$t_{EN(DG)}$	EN/UVLO de-glitch time			10		µs
t_{SU_TMR}	Start-up timeout interval	SWEN↑ to FLT↓		6.6		s
$t_{Discharge}$	QOD discharge time (90% to 10% of V_{OUT})	V_{SD} < $V_{EN/UVLO}$ < V_{UVLO}, C_{OUT} = 0.5mF, V_{IN} = 51V.		872		ms
t_{PGA}	PG assertion delay	DEVICE_CONFIG[15] = 0, Device in steady state, VOUT > VOUT_PGTH to PG↑		100		µs
t_{PGD}	PG De-assertion delay	Device in steady state, VOUT < VOUT_PGTH to PG↓		3		µs

6.10 Switching Characteristics

The output rising slew rate is internally controlled and constant across the entire operating voltage range so that the turn on timing is not affected by the load conditions. The rising slew rate can be adjusted by adding capacitance from the dVdt pin to ground. As CdVdt is increased it will reduce the slew rate (SR). See Slew Rate and Inrush Current Control (dVdt) section for more details. The Turn-Off Delay and Fall Time, however, are dependent on the RC time constant of the load capacitance (C_{OUT}) and Load Resistance (R_L). The Switching Characteristics are only valid for the power-up sequence where the supply is available in steady state condition and the load voltage is completely discharged before the device is enabled. Typical values are taken at T_J = 25°C unless specifically noted otherwise. V_{IN} = 51V, R_{OUT} = 2000Ω, C_{OUT} = 1mF

PARAMETER		C_{dVdt} = Open	C_{dVdt} = 22nF	UNITS
SR_{ON}	Output Rising slew rate	87	80	V/s

Copyright © 2026 Texas Instruments Incorporated

6.10 Switching Characteristics (continued)

The output rising slew rate is internally controlled and constant across the entire operating voltage range so that the turn on timing is not affected by the load conditions. The rising slew rate can be adjusted by adding capacitance from the dVdt pin to ground. As CdVdt is increased it will reduce the slew rate (SR). See Slew Rate and Inrush Current Control (dVdt) section for more details. The Turn-Off Delay and Fall Time, however, are dependent on the RC time constant of the load capacitance (C_{OUT}) and Load Resistance (R_L). The Switching Characteristics are only valid for the power-up sequence where the supply is available in steady state condition and the load voltage is completely discharged before the device is enabled. Typical values are taken at T_J = 25°C unless specifically noted otherwise. V_{IN} = 51V, R_{OUT} = 2000Ω, C_{OUT} = 1mF

PARAMETER		C_{dVdt} = Open	C_{dVdt} = 22nF	UNITS
$t_{D,ON}$	Turn ON delay	16.8	18	ms
t_R	Rise time	478	525.6	ms
t_{ON}	Turn ON time	494.8	543.6	ms
$t_{D,OFF}$	Turn OFF delay	1	1	µs
t_F	Fall time	Depends on R_{OUT} and C_{OUT}		µs

6.11 Typical Characteristics

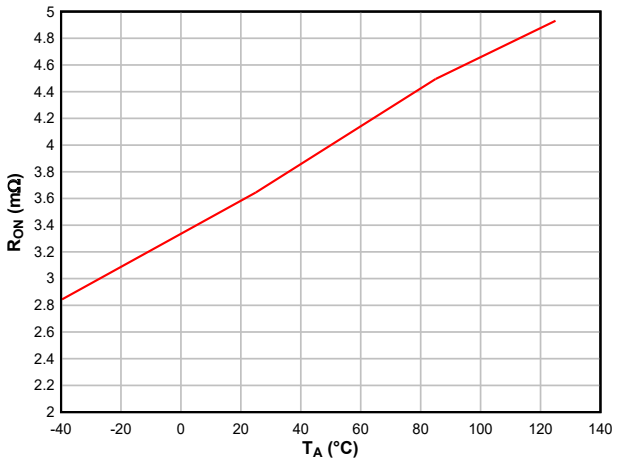

Figure 6-1. ON Resistance Across Temperature

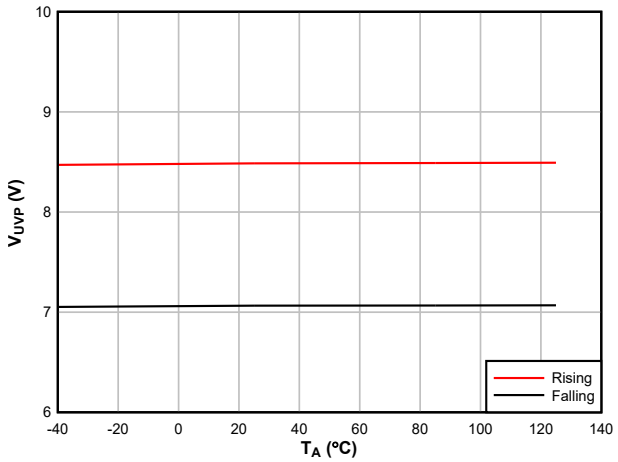

Figure 6-2. VDD Undervoltage Thresholds Across Temperature

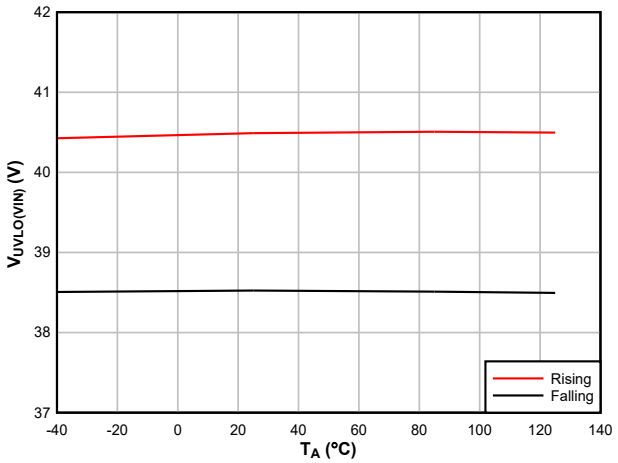

Figure 6-3. VIN Undervoltage Thresholds Across Temperature (VIN_UV_FLT = 0x71)

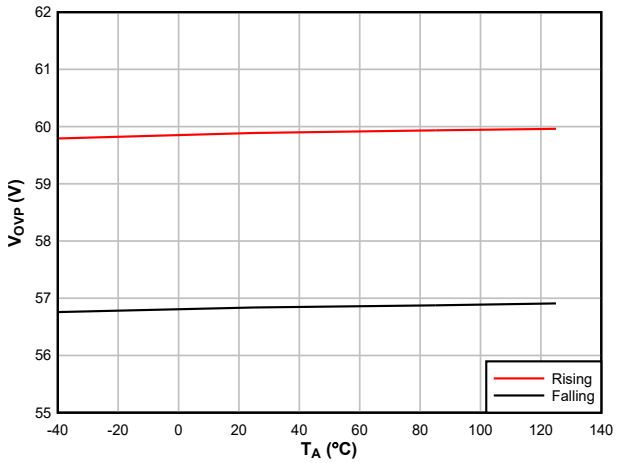

Figure 6-4. VIN Overvoltage Protection Threshold Across Temperature (VIN_OV_FLT = 0xB1)

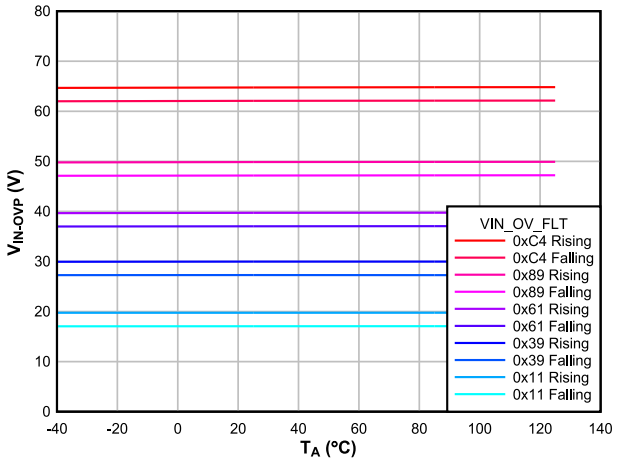

Figure 6-5. VIN Overvoltage Protection Threshold Across Temperature

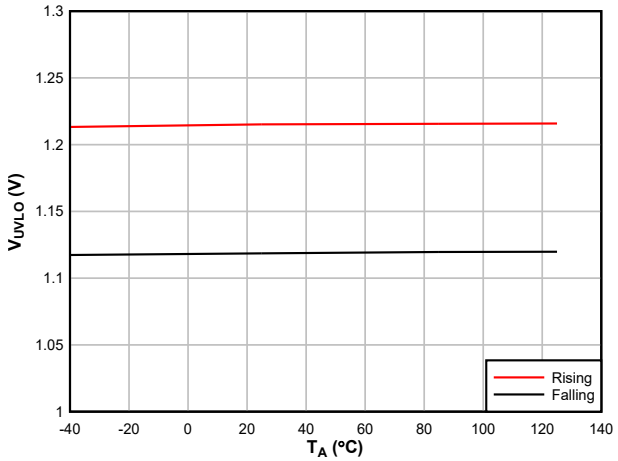

Figure 6-6. EN/UVLO Based Turn-off Thresholds Across Temperature

Copyright © 2026 Texas Instruments Incorporated

6.11 Typical Characteristics (continued)

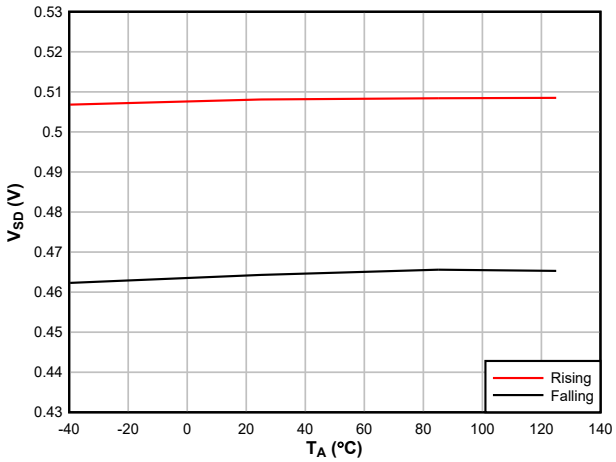

Figure 6-7. EN/UVLO Based Shutdown Thresholds Across Temperature

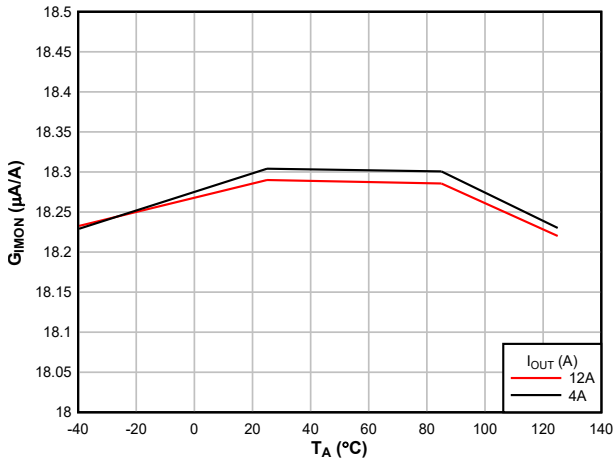

Figure 6-8. IMON Gain Across Load and Temperature

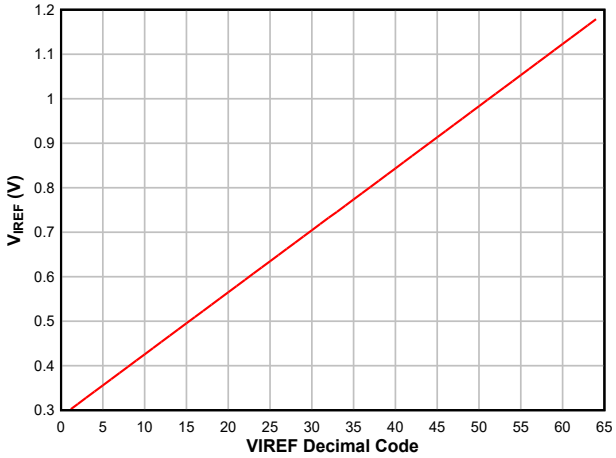

Figure 6-9. VIREF DAC Transfer Function

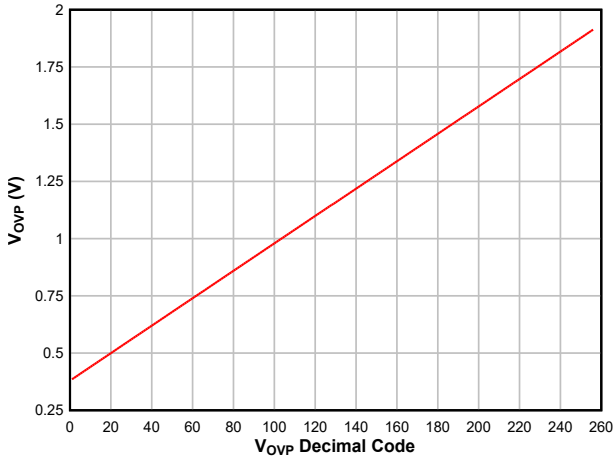

Figure 6-10. VOVP DAC Transfer Function

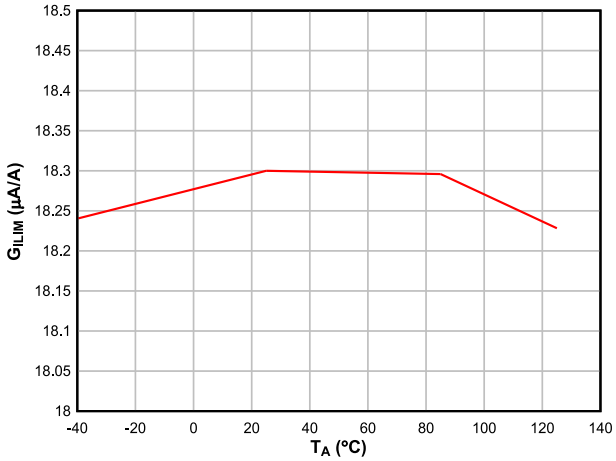

Figure 6-11. ILIM Gain Across Load and Temperature

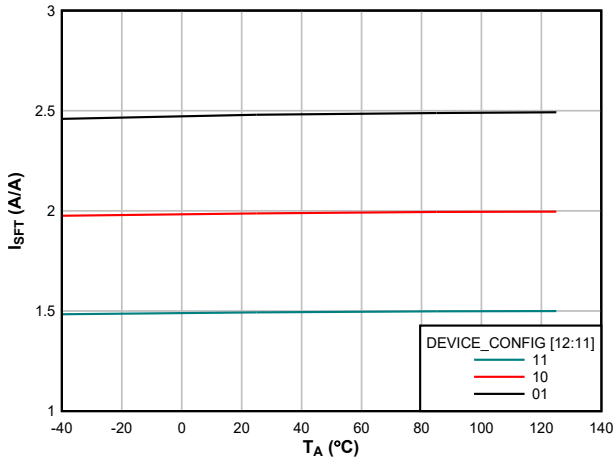

Figure 6-12. Scalable Fast-Trip Threshold Ratio Across Temperature

6.11 Typical Characteristics (continued)

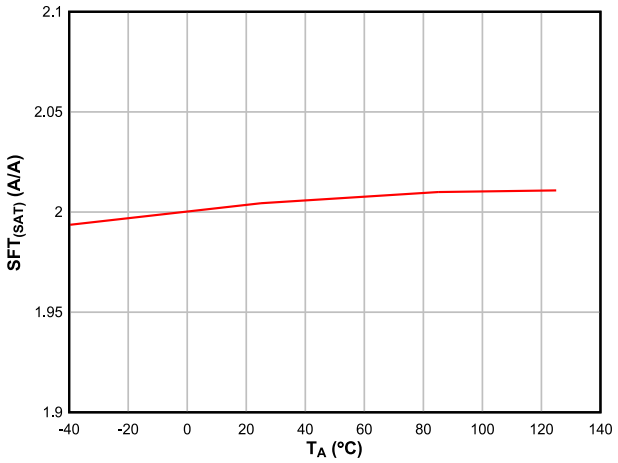

Figure 6-13. Scalable Fast-Trip Threshold Ratio during Startup Across Temperature

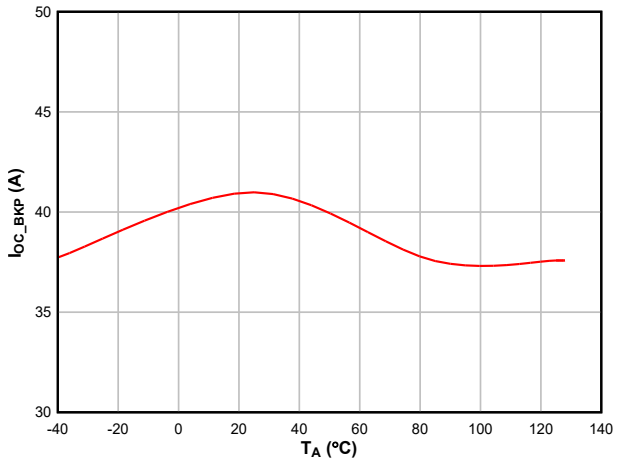

Figure 6-14. Backup Overcurrent Protection Threshold Across Temperature

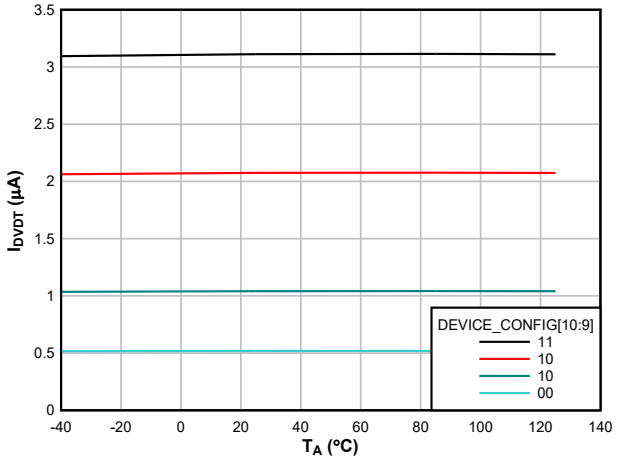

Figure 6-15. DVDT Pin Charging Current Across Temperature

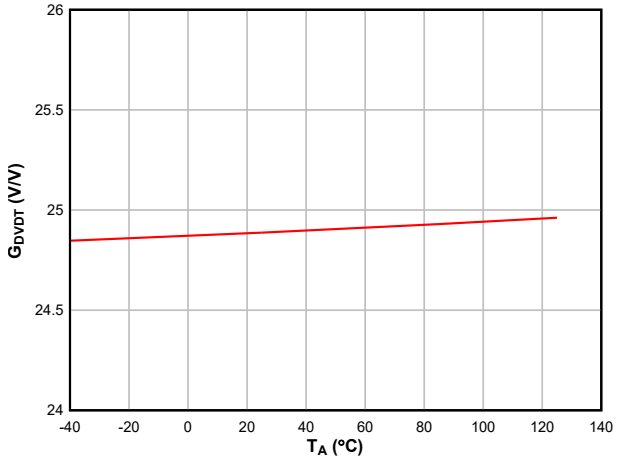

Figure 6-16. DVDT Gain Across Temperature

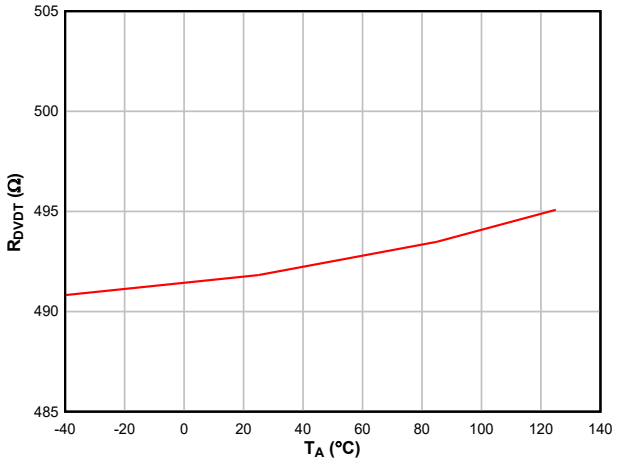

Figure 6-17. DVDT Discharge Resistance Across Temperature

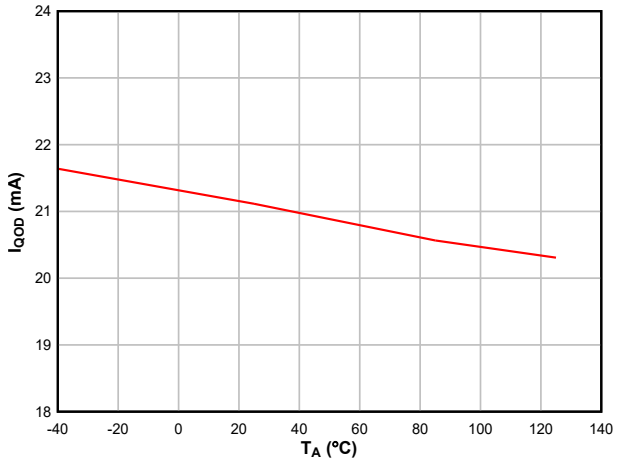

Figure 6-18. QOD Sink Current Across Temperature

Copyright © 2026 Texas Instruments Incorporated

6.11 Typical Characteristics (continued)

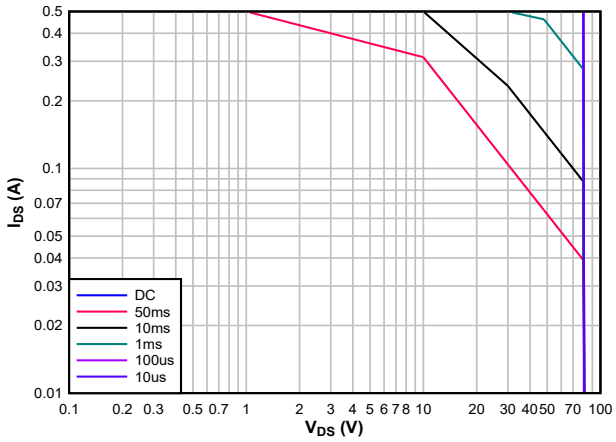

Figure 6-19. Allowed Operating Area (AOA) During Startup

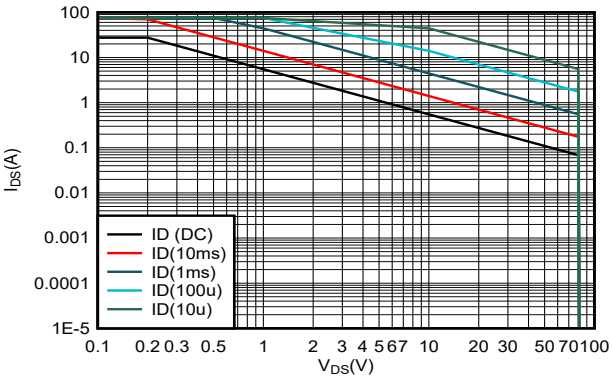

Figure 6-20. Allowed Operating Area (AOA) in Steady State

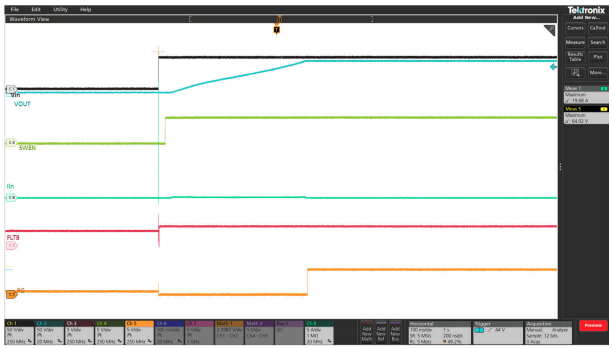

EN held high, IN supply ramped up to 51V. C_{OUT} = 1mF, C_{dVdt} = 68nF

Figure 6-21. Power Up Using Supply

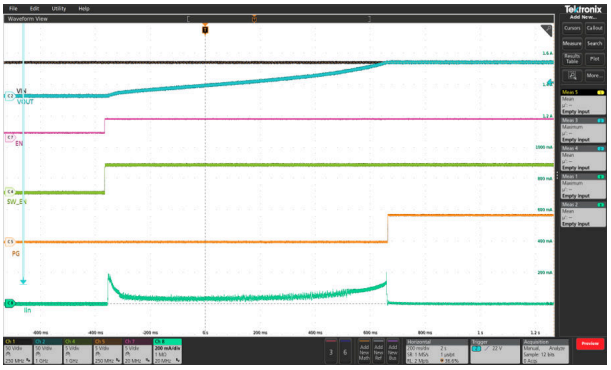

IN supply held steady at 54V, EN pin toggled from low to high. C_{OUT} = 1mF, C_{dVdt} = 68nF

Figure 6-22. Power Up Using EN

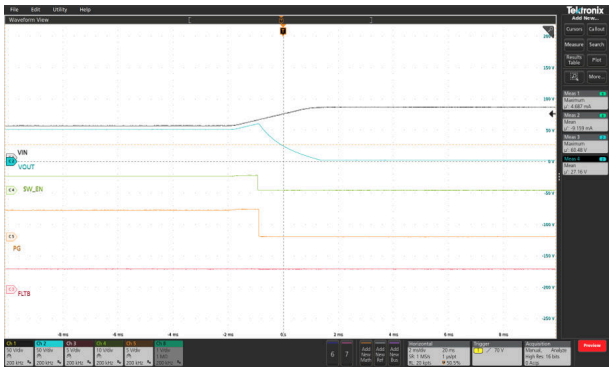

VIN Overvoltage rising threshold programmed to 60.47V, EN held high, IN supply ramped up from 54V to 80V with ramp rate of 10V/ms. C_{OUT} = 1mF, C_{dVdt} = 68nF

Figure 6-23. Input Overvoltage Protection

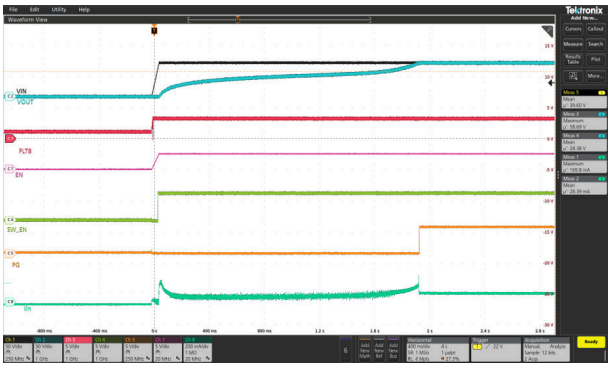

IN supply ramped to 54V along with EN, C_{OUT} = 500µF, C_{dVdt} = 68nF, R_{out}=820Ω DVDT scaling at 100%

Figure 6-24. Inrush with R and C

6.11 Typical Characteristics (continued)

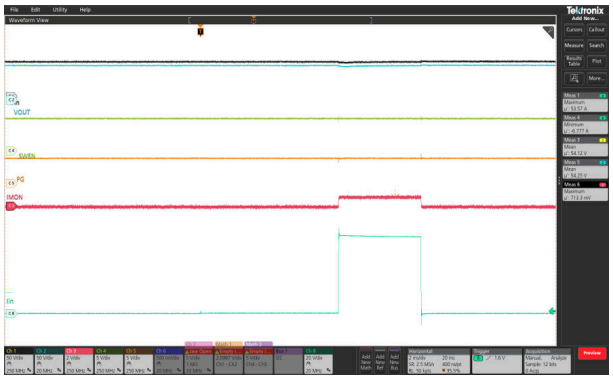

Device in steady-state, Load current of 48A applied for 3ms and then removed. Overcurrent blanking delay set to 3.2ms. Vin = 54V

Figure 6-25. Transient Overcurrent Blanking

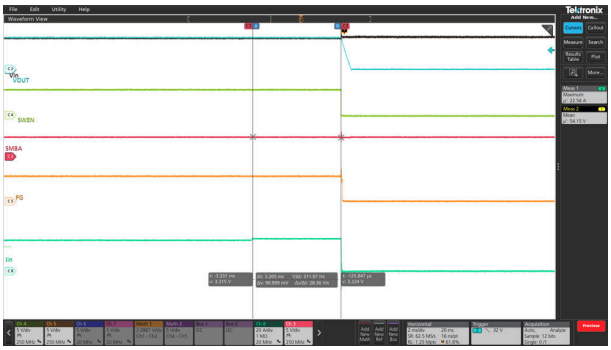

Device in steady-state, Load current ramped up to 48A for >3.2ms. Overcurrent blanking delay set to 3.2ms

Figure 6-26. Overcurrent Protection

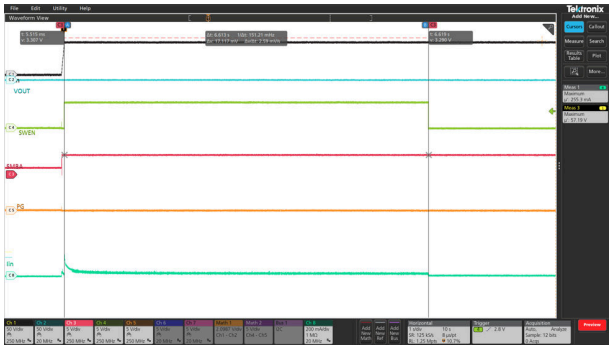

OUT shorted to GND. IN supply held steady at 54V, EN pin toggled from low to high.

Figure 6-27. Power Up Into Short-Circuit Protection

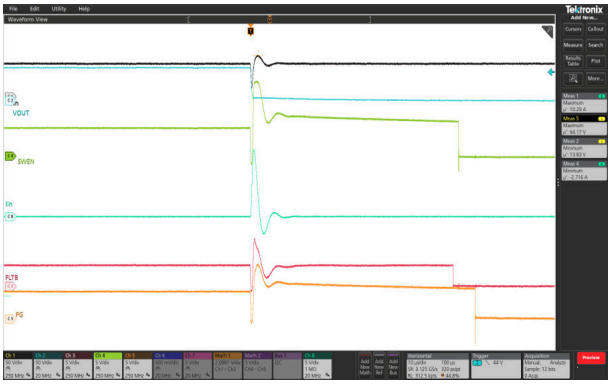

Device in steady-state, OUT shorted to GND. Vin = 51V. C_{out}=3uF

Figure 6-28. Short-Circuit Protection During Steady-State

Copyright © 2026 Texas Instruments Incorporated

7 Detailed Description

7.1 Overview

The TPS1689x is an eFuse with integrated power switch that is used to manage load voltage and load current. TPS1689x is equipped with a PMBus compatible digital interface which allows a host to control, configure, monitor and debug the device. The device starts the operation by monitoring the VDD and IN bus. When V_{DD} and V_{IN} exceed the respective Undervoltage Protection (UVP) thresholds, the device waits for the insertion delay timer duration to allow the supply to stabilize before starting up. Next, the device samples the EN/UVLO pin. As long as EN/UVLO is held low, the internal MOSFET is turned off along with the internal control/digital circuits. A high level on this pin enables the internal control circuits and prepares the PMBus engine to receive commands from the host.

After a successful start-up sequence, TPS1689x device now actively monitors the load current and input voltage, and controls the internal FET to make sure that the programmed overcurrent threshold I_{OCP} is not exceeded and overvoltage spikes are cut-off. This keeps the system safe from harmful levels of voltage and current. At the same time, a user programmable overcurrent blanking timer allows the system to pass transient peaks in the load current profile without tripping the eFuse. This maintains a robust protection against real faults which is also immune to transients, thereby maximizing system uptime.

The device has integrated protection circuits to maintain device safety and reliability under recommended operating conditions. The internal FET is protected at all time using the thermal shutdown mechanism, which turns off the FET whenever the junction temperature (T_J) becomes too hot for the device to work reliably.

The TPS1689x has integrated high accuracy and high bandwidth analog load current monitor, which allows the system to precisely monitor the load current in steady state as well as during transients. This facilitates the implementation of advanced dynamic platform power management techniques to maximize system power utilization and throughput without sacrificing safety and reliability.

The TPS1689x allows the host to monitor various system parameters and status over the PMBus interface. It is also possible to change the device configuration over PMBus to control the device behavior as per system needs. This includes various warning/fault thresholds, timers and pin functions. The configuration values can also be stored in the internal nonvolatile memory so that the device can start up with some pre-defined configuration without host intervention.

The TPS1689x also provides advanced telemetry features such as high-speed ADC sample buffering and Blackbox fault recording which facilitate system design and debug.

For systems needing higher load current support, TPS1689x can connect in parallel with TPS1685x. The TPS1689x acts as a primary controller and enables control, telemetry and configuration of the whole chain over PMBus. Each device synchronizes the operating state to enable a graceful startup, shutdown and response to faults.

Copyright © 2026 Texas Instruments Incorporated

7.2 Functional Block Diagram

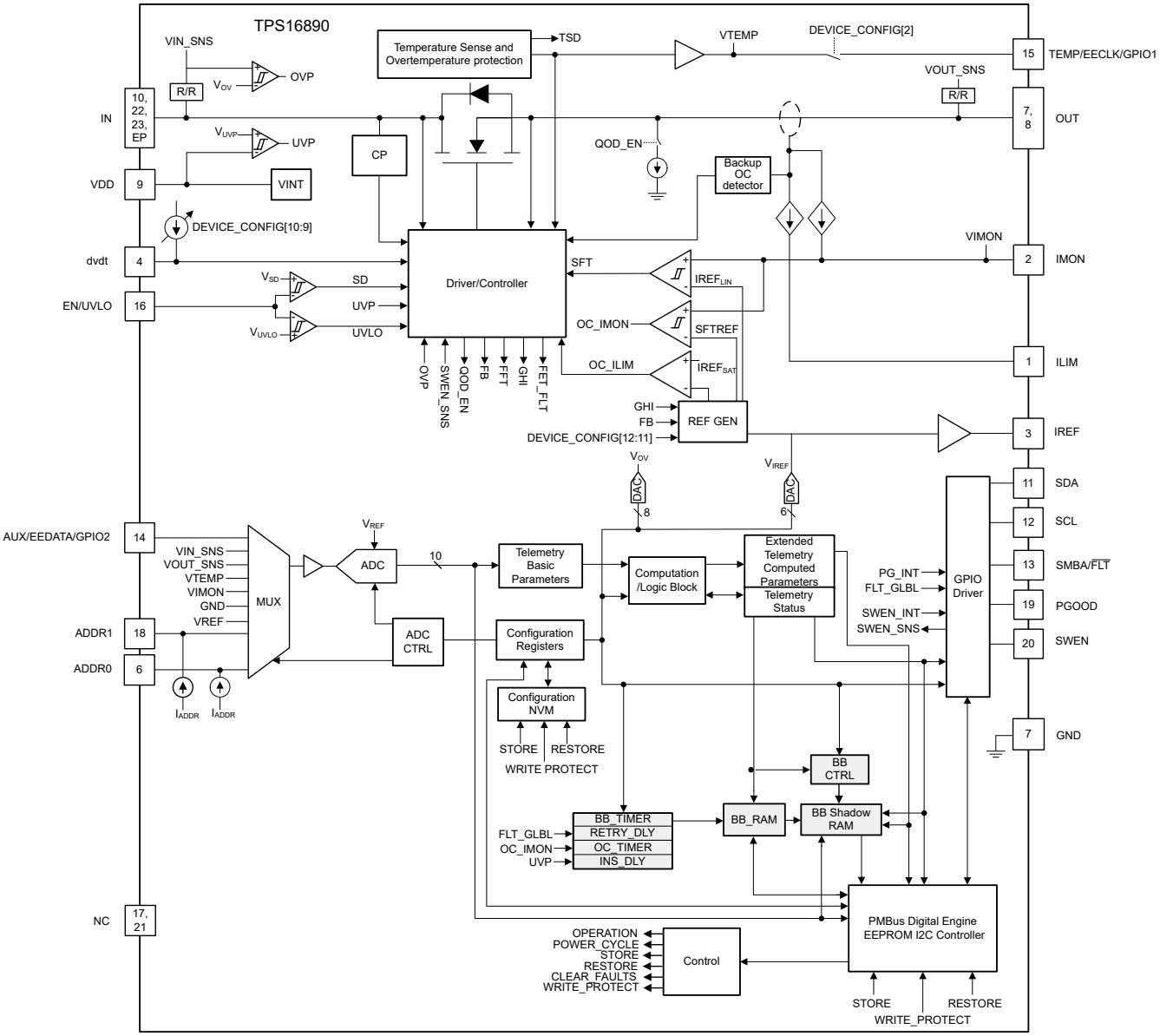

Figure 7-1. TPS1689x Functional Block Diagram

7.3 Feature Description

The TPS1689x eFuse is a highly integrated, advanced power management device that provides monitoring, detection, protection and reporting in the event of system faults.

7.3.1 Undervoltage Protection

The TPS1689x implements undervoltage lockout on VDD and VIN in case the applied voltage becomes too low for the system or device to properly operate. The undervoltage lockout has a default internal threshold (V_{UVP}) on VDD and programmable threshold (V_{UVLOIN}) on VIN. Alternatively, the UVLO comparator on the EN/UVLO pin allows the undervoltage protection threshold to be externally adjusted to a user defined value. Figure 7-2 and Equation 1 show how a resistor divider can be used to set the UVLO set point for a given voltage supply.

Copyright © 2026 Texas Instruments Incorporated

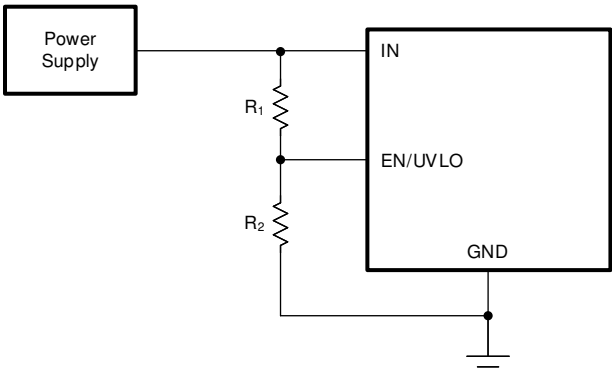

Figure 7-2. Adjustable Undervoltage Protection

$$V_{IN(UV)} = V_{UVLO(R)} \frac{R_1 + R_2}{R_2} \quad (1)$$

The VIN UVLO fault threshold can also be programmed using PMBus® writes to VIN_UV_FLT register.

The EN/UVLO pin implements a bi-level threshold and can be used to control the device from an external host.

1. $V_{EN} > V_{UVLO(R)}$: Device is fully ON.
2. $V_{SD(F)} < V_{EN} < V_{UVLO(F)}$: The FET along with most of the controller circuitry is turned OFF, except for some critical bias and digital circuitry. Holding the EN/UVLO pin in this state for a duration greater than t_{QOD} activates the Output Discharge function.
3. $V_{EN} < V_{SD(F)}$: All active circuitry inside the part is turned OFF and the device retains no digital state memory. The device also resets latched faults, status flags and configuration values written to the registers through PMBus writes.

7.3.2 Insertion Delay

The TPS1689x implements insertion delay at start-up to make sure the supply has stabilized before the device tries to turn on the power to the load. This is helpful in hotswap applications where a card is hot-plugged into a live backplane and can have some contact bounce before the card is firmly plugged into the connector. The device initially waits for the VDD supply to rise above the V_{UVP} threshold and all the internal bias voltages to settle. After that, the device remains off for an additional delay of t_{INSDLY} irrespective of the EN/UVLO pin condition. This action helps to prevent any unexpected behavior in the system if the device tries to turn on before the card has made firm contact with the backplane or if there is any supply ringing or noise during start-up.

The insertion delay can be further increased by programming the INS_DLY register value in the Non-volatile memory/EEPROM using PMBus.

7.3.3 Overvoltage Protection

The TPS1689x implements overvoltage lockout to protect the load from input overvoltage conditions. If the input voltage on IN exceeds the OVP rising threshold, the power FET is turned OFF within t_{OVP}. The OVP comparator on the IN pin uses a default internal overvoltage protection threshold of $V_{OVP(R)}$, which can be changed by programming the nonvolatile configuration memory or dynamically through PMBus register writes to the VIN_OV_FLT register. The OVP comparator has in-built hysteresis for improved noise immunity. When the voltage at IN falls back below the OVP falling threshold ($V_{OVP(F)}$), the device selects the turn-on mode based on the duration of the overvoltage condition. If the overvoltage condition persists for more than 20µs, the FET turns ON in a controlled dVdt manner. If the overvoltage condition lasts for less than 20µs, the FET turns ON in fast recovery mode.

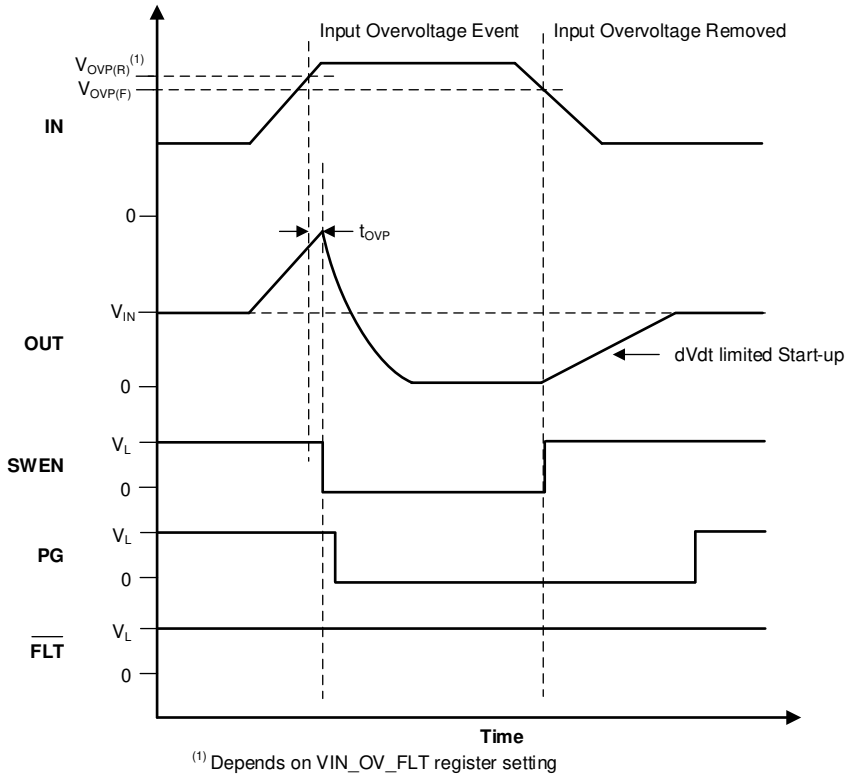

Figure 7-3. Input Overvoltage Protection Response

7.3.4 Inrush Current, Overcurrent, and Short-Circuit Protection

TPS1689x incorporates four levels of protection against overcurrent:

1. Adjustable slew rate (dVdt) for inrush current control
2. Active current limit with an adjustable threshold (I_{LIM}) for overcurrent protection during start-up
3. Circuit-breaker with an adjustable threshold (I_{OCP}) and blanking timer (t_{OC_TIMER}) for overcurrent protection during steady-state
4. Fast-trip response to severe overcurrent faults with a programmable threshold to quickly protect against severe short-circuits under all conditions, as well as a fixed threshold (I_{FFT}) during steady state

7.3.4.1 Slew Rate (dVdt) and Inrush Current Control

During hot-plug events or while trying to charge a large output capacitance, there can be a large inrush current. If the inrush current is not managed properly, it can put excessive stress on the system power supply causing it to droop and even damage the input connectors. This action can lead to unexpected restarts elsewhere in the system. The inrush current during turn-on is directly proportional to the load capacitance and rising slew rate. Equation 2 can be used to find the slew rate (SR) required to limit the inrush current (I_{INRUSH}) for a given load capacitance (C_{LOAD}):

$$\mathrm{SR}\left(\frac{\mathrm{V}}{\mathrm{ms}}\right) = \frac{\mathrm{I_{INRUSH}}\,(\mathrm{mA})}{\mathrm{C_{OUT}}\,(\mu\mathrm{F})} \tag{2}$$

A capacitor can be added to the DVDT pin to control the rising slew rate and lower the inrush current during turn-on. This is also a function of the dVdt rate scaling factor which can be digitally programmed through PMBus writes to the DEVICE_CONFIGregister. The required C_{dVdt} capacitance to produce a given slew rate can be calculated using Equation 3.

Copyright © 2026 Texas Instruments Incorporated

$$C_{dVdt}\,(pF) = \frac{50000 \times k}{SR\left(\frac{V}{ms}\right)} \quad (3)$$

where k = 0.25, if DEVICE_CONFIG[10:9] = 00

k = 0.5, if DEVICE_CONFIG[10:9] = 01

k = 1, if DEVICE_CONFIG[10:9] = 10 (Default)

k = 1.5, if DEVICE_CONFIG[10:9] = 11

The fastest output slew rate is achieved by leaving the dVdt pin open and setting DEVICE_CONFIG[10:9] = 11.

The slew rate is also a function of the energy dissipated during start-up. The slew rate control via DVDT is only below the Start-up current limit $I_{Startup}$. The current clamps at $I_{startup}$ if the start-up current due to dvdt pin exceeds it and the slew rate is slower.

Note

High turn-on slew rates in combination with high input power path inductance can result in oscillations during start-up. Mitigate this using one or more of the following steps:

1. Reduce the input inductance.
2. Increase the capacitance on the VIN pin.
3. Increase the DVDT pin capacitor value or change the DVDT scaling factor using DEVICE_CONFIG[10:9] register bits to reduce the slew rate or increase the start-up time. TI recommends using a minimum start-up time of 30ms.

7.3.4.1.1 Start-Up Timeout

If the start-up is not completed, that is, the FET is not fully turned on within a certain timeout interval (t_{SU_TMR}) after SWEN is asserted, the device registers it as a fault. The fault status is reported in the STATUS_MFR_SPECIFIC register Bit[6]. $\overline{FLT}$ is asserted low and the device goes into latch-off or auto-retry mode depending on the RETRY_CONFIG register setting.

7.3.4.2 Steady-State Overcurrent Protection (Circuit-Breaker)

The TPS1689x responds to output overcurrent conditions during steady-state by performing a circuit-breaker action after a user-programmable transient fault blanking interval. This action allows the device to support a higher peak current for a short user-defined interval but also establishes robust protection in case of persistent output faults.

The device constantly senses the output load current and provides an analog current output (I_{IMON}) on the IMON pin which is proportional to the load current, which in turn produces a proportional voltage (V_{IMON}) across the IMON pin resistor (R_{IMON}) as per Equation 4.

$$V_{IMON} = I_{OUT} \times G_{IMON} \times R_{IMON} \quad (4)$$

Where G_{IMON} is the current monitor gain (I_{IMON} : I_{OUT})

The overcurrent condition is detected by comparing this voltage against the voltage on the IREF pin as a reference. The reference voltage (V_{IREF}) can be controlled in two ways, which sets the overcurrent protection threshold (I_{OCP}) accordingly.

- The reference voltage (V_{IREF}) can be generated using internal DAC and can be changed by programming the nonvolatile configuration memory or dynamically through PMBus® writes to the VIREF register.
- It is also possible to drive the IREF pin from an external low impedance precision reference voltage source.

The overcurrent protection threshold during steady-state (I_{OCP}) can be calculated using Equation 5.

$$I_{OCP} = \frac{V_{IREF}}{G_{IMON} \times R_{IMON}} \quad (5)$$

Note

TI recommends to add a 1nF capacitor from IREF pin to GND for improved noise immunity.

After an overcurrent condition is detected, that is the load current exceeds the programmed current limit threshold (I_{OCP}), but stays lower than the short-circuit threshold (I_{SCP}), the device starts running the internal overcurrent blanking digital timer (OC_TIMER). If the load current drops below the current limit threshold before the OC_TIMER expires, the circuit-breaker action is not engaged. This action allows short overload transient pulses to pass through the device without tripping the circuit. At the same time, the OC_TIMER is reset so that it is at its default state before the next overcurrent event. This establishes the full blanking timer interval is provided for every overcurrent event.

If the overcurrent condition persists, the OC_TIMER continues to run and after it expires, the circuit-breaker action turns off the FET immediately.

Equation 6 can be used to calculate the R_{IMON} value for the desired overcurrent threshold.

$$R_{IMON} = \frac{V_{IREF}}{G_{IMON} \times I_{OCP}} \quad (6)$$

The duration for which transients are allowed can be programmed using OC_TIMER register setting through PMBus® writes.

Figure 7-4 shows the overcurrent response for TPS1689x eFuse. After the part shuts down due to a circuit-breaker fault, it either stays latched off or restarts automatically based on the RETRY_CONFIG register setting.

Copyright © 2026 Texas Instruments Incorporated

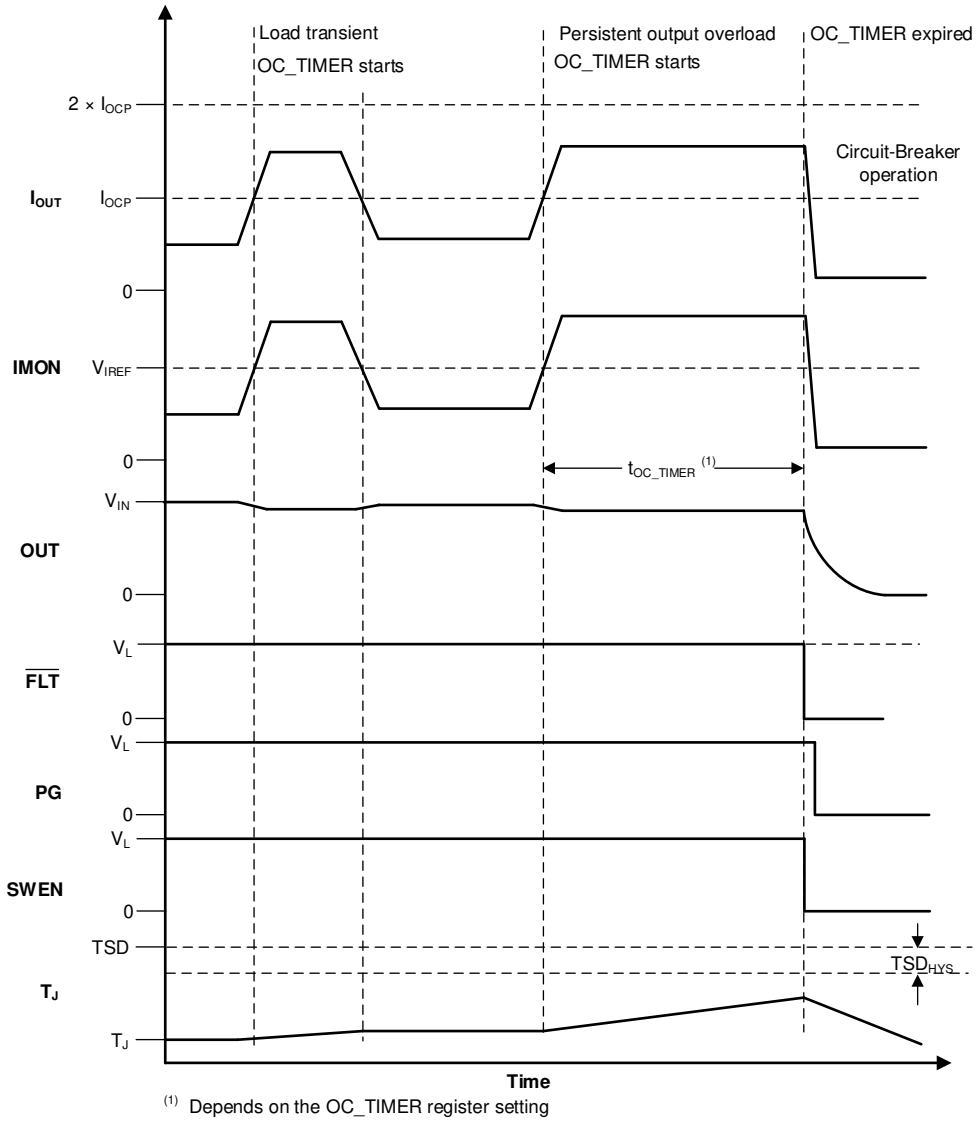

Figure 7-4. Steady-State Overcurrent (Circuit-Breaker) Response

When a transient overcurrent condition (the load current exceeds the programmed current limit threshold but the OC_TIMER does not expire) is detected, the device:

- Sets the OC_DET bit in the STATUS_MFR_SPECIFIC_2 register
- Fills-up one of the Blackbox RAM registers (if available to write) writing the event identifier as OC_DET and relative timestamp information
- Increases the Blackbox RAM address pointer in the BB_TIMER register by one (1) if it is previously less than six (6), otherwise resets to zero (0).

When a persistent overcurrent condition (the load current exceeds the programmed current limit threshold and the OC_TIMER expires) is detected, the device:

- Sets the FET_OFF and NONE_OF_THE_ABOVE/UNKNOWN bits in the STATUS_BYTE register
- Sets the OUT_STATUS, INPUT_STATUS, PGOODB, and NONE_OF_THE_ABOVE/UNKNOWN bits in the upper byte of the STATUS_WORD register
- Sets the VOUT_UV_WARN bit in the STATUS_OUT register
- Sets the OC_FLT bit in the STATUS_INPUT register
- Sets the PGOODB bit in the STATUS_MFR_SPECIFIC_2 register

Copyright © 2026 Texas Instruments Incorporated

- Notifies the host by asserting $\overline{SMBA}$, if it is not masked setting the STATUS_IN, PGOODB, and STATUS_OUT bits in the ALERT_MASK register.
- Deasserts the external PG signal.
- Asserts the $\overline{FLT}$ signal, if it is not masked setting the OC_FLT bit high in the FAULT_MASK register.

Note

It is assumed that the VIN_UV_WARN and VIN_OV_WARN events are not triggered because of a step load transient.

7.3.4.3 Active Current Limiting During Start-Up

The TPS1689x responds to output overcurrent conditions during start-up by actively limiting the current. The start-up current limit is internally fixed to $I_{start\text{-}up}$. During current regulation, the output voltage drops, resulting in increased device power dissipation across the FET. If the device internal temperature (T_J) exceeds the thermal shutdown threshold, the FET is turned off. After the part shuts down due to a TSD fault, then the part either stays latched off or restarts automatically after a delay based on the RETRY_CONFIG register setting. See Section 7.3.6 for more details on device response to overtemperature.

Note

The active current limit block employs a fold-back mechanism during start-up based on the output voltage (V_{OUT}) and internal FET junction temperature. When V_{OUT} is below the fold-back threshold (V_{FB}), the current limit threshold is further lowered.

7.3.4.4 Short-Circuit Protection

During an output short-circuit event, the current through the device increases very rapidly. When an output short circuit is detected, the internal fast-trip comparator triggers a fast protection sequence to prevent the current from building up further and causing any damage or excessive input supply droop. This action enables the user to adjust the fast-trip threshold as per system rating, rather than using a high fixed threshold which may not be best for all systems. The fast-trip comparator employs a scalable threshold (I_{SFT}) which is a function of the circuit-breaker threshold (I_{OCP}) and a digitally programmable scaling factor. The default fast-trip threshold is equal to 2 × I_{OCP} during steady-state and 2 × $I_{Startup}$ during inrush. The scaling factor for steady-state fast-trip threshold can be programmed to a different value using the DEVICE_CONFIG[12:11] register bits. Available programming options are 1.5×, 2× and 2.5×. After the current exceeds the fast-trip threshold, the TPS1689x turns off the FET within t_{SFT}.

The device also employs a higher fixed fast-trip threshold (I_{FFT}) to provide fast protection against hard short-circuits during steady-state (FET in linear region). After the current exceeds I_{FFT}, the FET is turned off completely within t_{FFT}.

The device response after a fast-trip event is configurable using the SC_RETRY bit in the DEVICE_CONFIG register through PMBus register writes or nonvolatile configuration memory. There are two programming options available:

1. **SC_RETRY = 0 (Default setting):** The device latches a fault and remains off until a restart is triggered either externally or through internal auto-retry mechanism as per the RETRY_CONFIG register setting.

   When a short-circuit fault occurs with the SC_RETRY bit in the DEVICE_CONFIG register low, the device:

   - Sets the FET_OFF and NONE_OF_THE_ABOVE/UNKNOWN bits in the STATUS_BYTE register.
   - Sets the OUT_STATUS, PGOODB, and NONE_OF_THE_ABOVE/UNKNOWN bits in the upper byte of the STATUS_WORD register.
   - Sets the VOUT_UV_WARN bit in the STATUS_OUT register.
   - Sets the PGOODB and SC_FLT bits in the STATUS_MFR_SPECIFIC_2 register.
   - Notifies the host by asserting $\overline{SMBA}$, if it is not masked setting the PGOODB and STATUS_OUT bits in the ALERT_MASK register.
   - Deasserts the external PG signal.

Copyright © 2026 Texas Instruments Incorporated

- Asserts the $\overline{FLT}$ signal, if it is not masked setting the SC_FLT bit high in the FAULT_MASK register.

2. **SC_RETRY = 1:** The device tries to turn the FET back ON fully after a short de-glitch interval (30µs). This allows the FET to try and recover quickly after a transient overcurrent event and minimizes the output voltage droop. However, if the fault is persistent, the device enters current limit causing the junction temperature to rise and eventually enter thermal shutdown. The device latches a fault and remains off until a restart is triggered either externally or through internal auto-retry mechanism as per the RETRY_CONFIG register setting. See *Overtemperature Protection* section for details on the device response to overtemperature.

   When a short-circuit fault occurs with the SC_RETRY bit in the DEVICE_CONFIG register high, the device:

   - Sets the FET_OFF, STATUS_TEMP, and NONE_OF_THE_ABOVE/UNKNOWN bits in the STATUS_BYTE register
   - Sets the OUT_STATUS, MFR_STATUS, PGOODB, and NONE_OF_THE_ABOVE/UNKNOWN bits in the upper byte of the STATUS_WORD register
   - Sets the VOUT_UV_WARN bit in the STATUS_OUT register
   - Sets the OT_FLT bit in the STATUS_TEMP register
   - Sets the SOA_FLT bit in the STATUS_MFR_SPECIFIC register
   - Sets the PGOODB bit in the STATUS_MFR_SPECIFIC_2 register
   - notifies the host by asserting $\overline{SMBA}$, if it is not masked setting the PGOODB, MFR_STATUS, STATUS_TEMP, and STATUS_OUT bits in the ALERT_MASK register.
   - Deasserts the external PG signal.
   - Asserts the $\overline{FLT}$ signal, if it is not masked setting the SOA_FLT and TEMP_FLT bits high in the FAULT_MASK register.

Figure 7-5 shows the short-circuit response for TPS1689x eFuse.

In some of the systems, for example blade servers and telecom equipment which house multiple hot-pluggable blades or line cards connected to a common supply backplane, there can be transients on the supply due to switching of large currents through the inductive backplane. This can result in current spikes on adjacent cards which can potentially be large enough to trigger the fast-trip comparator of the eFuse. The TPS1689x uses a proprietary algorithm to avoid nuisance tripping in such cases thereby facilitating uninterrupted system operation.

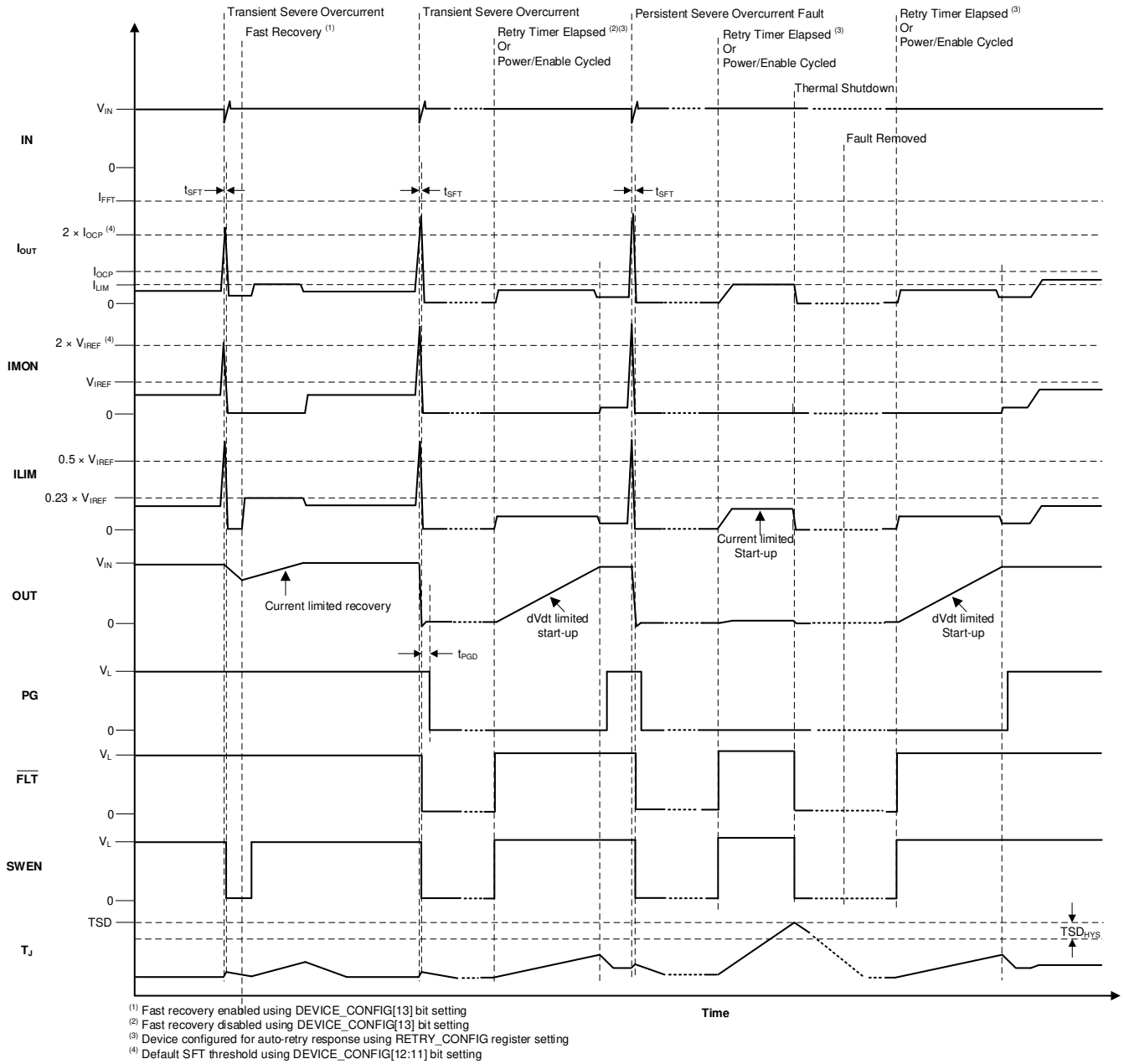

(1) Fast recovery enabled using DEVICE_CONFIG[13] bit setting
(2) Fast recovery disabled using DEVICE_CONFIG[13] bit setting
(3) Device configured for auto-retry response using RETRY_CONFIG register setting
(4) Default SFT threshold using DEVICE_CONFIG[12:11] bit setting

Figure 7-5. Short-Circuit Response

7.3.5 Analog Load Current Monitor (IMON)

The TPS1689x allows the system to monitor the output load current accurately by providing an analog current on the IMON pin which is proportional to the current through the FET. The benefit of having a current output is that the signal can be routed across a board without adding significant errors due to voltage drop or noise coupling from adjacent traces. The current output also allows the IMON pins of multiple eFuse devices (TPS1689x or TPS1685x) to be tied together to get the total current in a parallel configuration. The IMON signal can be converted to a voltage by dropping it across a resistor at the point of monitoring. The user can sense the voltage (V_{IMON}) across the R_{IMON} to get a measure of the output load current using Equation 7.

$$I_{OUT} = \frac{V_{IMON}}{G_{IMON} \times R_{IMON}} \quad (7)$$

Copyright © 2026 Texas Instruments Incorporated

The TPS1689x IMON circuit is designed to provide high bandwidth and high accuracy across load and temperature conditions, irrespective of board layout and other system operating conditions. This design allows the IMON signal to be used for advanced dynamic platform power management techniques such as Intel PSYS or PROCHOT to maximize system power usage and platform throughput without sacrificing safety or reliability.

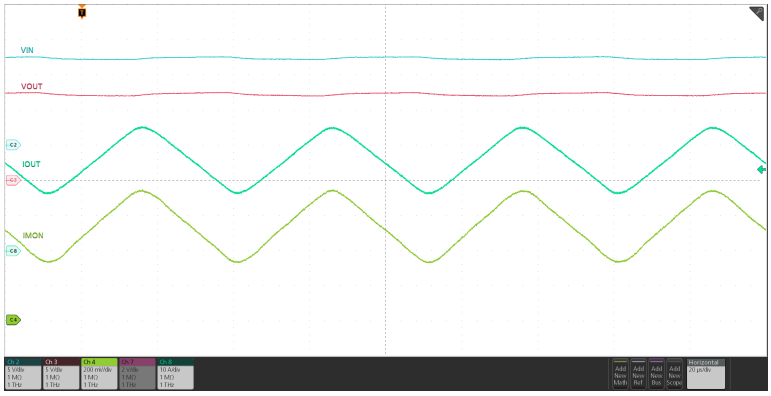

Figure 7-6. Analog Load Current Monitor Response

Note

1. The IMON pin provides load current monitoring information only during steady-state. During start-up, the IMON pin reports load current with reduced accuracy.
2. The ILIM pin reports the individual device load current at all times and can also be used as an analog load current monitor for each individual device.
3. TI recommends adding a 22pF capacitor from IMON pin to GND for noise filtering purposes.
4. Take care to minimize parasitic capacitance on the ILIM pin to avoid any impact on the overcurrent and short-circuit protection timing during start-up.

7.3.6 Overtemperature Protection

The TPS1689x employs an internal thermal shutdown mechanism to protect itself when the internal FET becomes too hot to operate safely. When the TPS1689x detects thermal overload, the device shuts down. Thereafter the device either remains latched-off until the device is power cycled or re-enabled, or restarts automatically after delay based on the device Auto-retry configuration.

The overtemperature threshold has a default threshold (TSD) which can be digitally programmed to a lower value using the OT_FLT register based on system needs.

Table 7-1. Overtemperature Protection Summary

AUTO-RETRY CONFIGURATION	ENTER TSD	EXIT TSD
Latch-Off	V_{TEMP} ≥ OT_FLT threshold or T_J ≥ TSD	V_{TEMP} < OT_FLT - OT_{Hys} or T_J < TSD – TSD_{HYS} VDD cycled to 0V and then above $V_{UVP(R)}$ or EN/UVLO toggled below $V_{SD(F)}$
Auto-Retry	V_{TEMP} ≥ OT_FLT threshold or T_J ≥ TSD	V_{TEMP} < OT_FLT - OT_{Hys} or T_J < TSD – TSD_{HYS} Retry Timer expired or VDD cycled to 0V and then above $V_{UVP(R)}$ or EN/UVLO toggled below $V_{SD(F)}$

7.3.7 Analog Junction Temperature Monitor (TEMP)

The TPS1689x allows the system to monitor the junction temperature (T_J) accurately by providing an analog voltage on the TEMP pin which is proportional to the temperature of the die. This voltage is sensed by an ADC input and reported using the READ_TEMPERATURE_1 PMBus command for digital telemetry. In a multi-device

parallel configuration involving TPS1689x and TPS1685x, the TEMP outputs of all devices can be tied together. In this configuration, the TEMP signal reports the temperature of the hottest device in the chain.

Note

1. The TEMP pin voltage is used only for external monitoring and does not interfere with the overtemperature protection scheme of each individual device which is based purely on the internal temperature monitor.
2. TI recommends adding a capacitance of 2.2nF on the TEMP pin to filter out glitches during system transients.

7.3.8 FET Health Monitoring

The TPS1689x can detect and report certain conditions which are indicative of a failure of the power path FET. If undetected or unreported, these conditions can compromise system performance either by not providing power to the load correctly or the necessary level of protection. After a FET failure is detected, the TPS1689x tries to turn off the internal FET by pulling the gate low and asserts the $\overline{FLT}$ pin. The specific FET fault type is also reported in the STATUS_MFR_SPECIFIC status register.

- **D-S short:** D-S short can result in a constant uncontrolled power delivery path formed from source to load, either due to a board assembly defect or due to internal FET failure. This condition is detected at start-up by checking if $V_{IN-OUT} < V_{DSFLT}$ before the FET is turned ON. If yes, the device engages the internal output discharge to try and discharge the output. If the V_{OUT} does not discharge below V_{FB} within a certain allowed interval, the device asserts the $\overline{FLT}$ pin and sets the FET_FAULT_DS bit in the STATUS_MFR_SPECIFIC status register.

Note

There is an option to disable the D-S fault detection digitally by setting the DIS_VDSFLT bit in the DEVICE_CONFIG register. This allows the device start-up into a pre-charged output without triggering the D-S fault.

- **G-D short:** The TPS1689x detects this kind of FET failure at all times by checking if the gate voltage is close to V_{IN} even when the internal control logic is trying to hold the FET in OFF condition. If this condition is detected, the device asserts the $\overline{FLT}$ pin and sets the FET_FAULT_GD bit in the STATUS_MFR_SPECIFIC status register.
- **G-S short:** The TPS1689x detects this kind of FET failure during start-up by checking if the FET G-S voltage fails to reach the necessary overdrive voltage within a certain timeout period (t_{SU_TMR}) after the gate driver is turned ON. While in steady-state, if the G-S voltage becomes low before the controller logic has signaled to the gate driver to turn off the FET, it is latched as a fault. If this condition is detected, the device asserts the $\overline{FLT}$ pin and sets the FET_FAULT_GS bit in the STATUS_MFR_SPECIFIC status register.

7.3.9 Single Point Failure Mitigation

The TPS1689x relies on the proper component connections and biasing on the IMON, ILIM and IREF pins along with the appropriate threshold digital configurations to provide overcurrent and short-circuit protection under all circumstances. As an added safety measure, the device uses the following mechanisms to confirm that the device provides some form of overcurrent protection even if any of these pins are not connected correctly in the system or the associated components have a failure in the field or if the configuration registers are not programmed correctly.

7.3.9.1 IMON Pin Single Point Failure

- **IMON pin open:** In this case, the IMON pin voltage is internally pulled up to a higher voltage and exceeds the threshold (V_{IREF}), causing the part to perform a circuit-breaker action even if there is no significant current flowing through the device.

Copyright © 2026 Texas Instruments Incorporated

- **IMON pin shorted to GND directly or through a very low resistance:** In this case, the IMON pin voltage is held at a low voltage and is not allowed to exceed the threshold (V_{IREF}) even if there is significant current flowing through the device, thereby rendering the primary overcurrent protection mechanism ineffective. The device relies on an internal overcurrent sense mechanism to provide some protection as a backup. If the device detects that the backup current sense threshold (I_{OC_BKP}) is exceeded but at the same time the primary overcurrent detection on IMON pin fails, it triggers single point failure detection and latches a fault. The FET is turned off and the $\overline{FLT}$ pin is asserted. At the same time, the SPFAIL status bit in STATUS_MFR_SPECIFIC_2 register is set and the $\overline{SMBA}$ signal is asserted.

7.3.9.2 IREF Pin Single Point Failure

- **IREF DAC set incorrectly or externally forced to higher voltage:** In this case, the IREF pin (V_{IREF}) is pulled up internally or externally to a voltage which is higher than the target value as per the recommended I_{OCP} or I_{LIM} calculations, preventing the primary circuit-breaker, active current limit, and short-circuit protection from getting triggered even if there is significant current flowing through the device. The device relies on an internal overcurrent detection mechanism to provide some protection as a backup. If the device detects that the load current exceeds backup overcurrent threshold (I_{OC_BKP}) but at the same the primary overcurrent or short-circuit detection on ILIM or IMON pin fails, it triggers single point failure detection and latches a fault. The FET is turned off and the $\overline{FLT}$ pin is asserted. At the same time, the SPFAIL status bit in STATUS_MFR_SPECIFIC_2 register is set and the $\overline{SMBA}$ signal is asserted.
- **IREF pin shorted to GND:** In this case, the V_{IREF} threshold is set to 0V, causing the part to perform active current limit or circuit-breaker action even if there is no significant current flowing through the device.

7.3.10 General Purpose Digital Input/Output Pins

The TPS1689x has two (2) general-purpose digital input/output pins which are configurable for different functions as per system needs.

1. TEMP/EECLK/GPIO1(General Purpose Digital Output)
2. Aux/EEDATA/GPIO2(General Purpose Digital Output)

   These pins are configurable using DEVICE_CONFIG register bits.

7.3.10.1 Fault Response and Indication ($\overline{FLT}$)

Table 7-2 summarizes the device response to various fault conditions.

Table 7-2. Fault Summary

EVENT OR CONDITION	DEVICE RESPONSE	FAULT LATCHED INTERNALLY	$\overline{FLT}$ PIN STATUS	PIN INDICATION MASKING OPTION	DELAY
Steady-state	None	N/A	H	N/A	
Inrush	None	N/A	H	N/A	
Overtemperature	Shutdown	Y	L	Y	
Undervoltage (EN/UVLO)	Shutdown	N	H	N/A	
Undervoltage (VDD UVP)	Shutdown	N	H	N/A	
Undervoltage (VIN UVP)	Shutdown	N	H	N/A	
Overvoltage (VIN OVP)	Shutdown	N	H	N/A	
Transient overcurrent	None	N	H	N/A	
Persistent overcurrent (steady-state)	Circuit-Breaker	Y	L	Y	t_{ITIMER}
Persistent overcurrent (start-up)	Current Limit	N	H	N/A	Post TSD
Output short-circuit	Fast-trip	Y	L	Y	t_{FT}

Table 7-2. Fault Summary (continued)

EVENT OR CONDITION	DEVICE RESPONSE	FAULT LATCHED INTERNALLY	$\overline{FLT}$ PIN STATUS	PIN INDICATION MASKING OPTION	DELAY
Output short-circuit (Fast recovery configuration)	Fast-trip followed by current limited Start-up	N	H	N/A	
IMON pin open (steady-state)	Shutdown	Y	L	Y	
IMON pin short (steady-state)	Shutdown (If I_{OUT} > I_{OC_BKP})	Y	L	Y	45µs
IREF pin open (start-up)	Shutdown (If I_{OUT} > I_{OC_BKP})	Y	L	Y	
IREF pin open (steady-state)	Shutdown (if I_{OUT} > I_{OC_BKP})	Y	L	Y	t_{ITIMER}
IREF pin short (steady-state)	Shutdown	Y	L	Y	
IREF pin short (start-up)	Shutdown	Y	L	Y	
Start-up timeout	Shutdown	Y	L	N	t_{SU_TMR}
FET health fault (G-S)	Shutdown	Y	L	Y	10µs
FET health fault (G-D)	Shutdown	Y	L	Y	
FET health fault (D-S)	Shutdown	N	L	Y	t_{SU_TMR}
External fault (SWEN pulled low externally while device is not in UV or OV)	Shutdown	Y	L	Y	

The device response after a fault varies based on the RETRY_CONFIG register setting. The device latches a fault as per the table above and thereafter follows an auto-retry or latch-off response. For auto-retry configuration, the latched faults also trigger the start of the Auto-Retry Timer, while keeping the $\overline{FLT}$ pin pulled low. On expiry of the timer period (t_{RETRY}), the $\overline{FLT}$ pin pull-down is released and the device is ready to restart automatically. When the device turns on again, it follows the usual DVDT limited start-up sequence.

The only exception to this is during Short-circuit fault when the device is configured for fast recovery using the SC_RETRY bit in the DEVICE_CONFIG register. In this case, the device turns off quickly and then automatically turns back on in a current limited manner. This allows the system to try and recover quickly from any transient faults. See Short-Circuit Protection section for more details.

For faults that are latched internally, power cycling the part or pulling the EN/UVLO pin voltage below $V_{SD(F)}$ clears the fault and the $\overline{FLT}$ pin is de-asserted. This action also clears the Auto-retry timer. Pulling the EN/UVLO just below the UVLO threshold has no impact on the device in this condition. This is true in case of latch-off and auto-retry configurations.

In a parallel eFuse configuration involving TPS1689x and TPS1685x, the fault response is determined by the TPS1689x as the primary device. However, if the primary device fails to register a fault, there is a fail-safe mechanism in the secondary device to take control and turn off the entire chain by pulling the SWEN pin low and enter a latch-off condition. Thereafter, the device can be turned on again only by power cycling VDD below $V_{UVP(F)}$ or by cycling EN/UVLO pin below $V_{SD(F)}$.

7.3.10.2 Power Good Indication (PG)

Power Good is an active high digital output which is asserted high to indicate when the device is in steady-state and capable of delivering maximum power.

Copyright © 2026 Texas Instruments Incorporated

Table 7-3. PG Indication Summary

EVENT OR CONDITION	FET STATUS	PG PIN STATUS	PG DELAY
Device disabled (V_{EN} < V_{UVLO})	OFF	L	t_{PGD}
VIN Undervoltage (V_{IN} < V_{UVP} or V_{IN} < VIN_UV_FLT)	OFF	L	
VDD Undervoltage (V_{DD} < V_{UVP})	OFF	L	
VIN Overvoltage (V_{IN} > VIN_OV_FLT)	OFF	L	t_{PGD}
Steady-state	ON	H	t_{PGA}
Inrush	ON	L	t_{PGA}
Transient overcurrent	ON	H	N/A
Circuit-breaker (persistent overcurrent followed by OC_TIMER expiry)	OFF	L	t_{OC_TIMER} + t_{PGD}
Fast-trip	OFF	L (V_{OUT} < VOUT_PGTH) H (V_{OUT} > VOUT_PGTH)	t_{PGD} N/A
Overtemperature	Shutdown	L	t_{PGD}

After power up, PG is pulled low initially. The device initiates an inrush sequence in which the gate driver circuit starts charging the gate capacitance from the internal charge pump. When the FET gate voltage reaches the full overdrive indicating that the inrush sequence is complete and the device can deliver full power, the PG pin is asserted high after a de-glitch time (t_{PGA}). The PG assertion delay can be optionally increased by setting the PG_DVDT_DLY bit in the DEVICE_CONFIG register.

The PG is de-asserted if the output voltage falls below a threshold at any point during normal operation or the device detects a fault. The PG de-assertion threshold can be digitally programmed through the VOUT_PGTH register. The PG de-assertion de-glitch time is t_{PGD}.

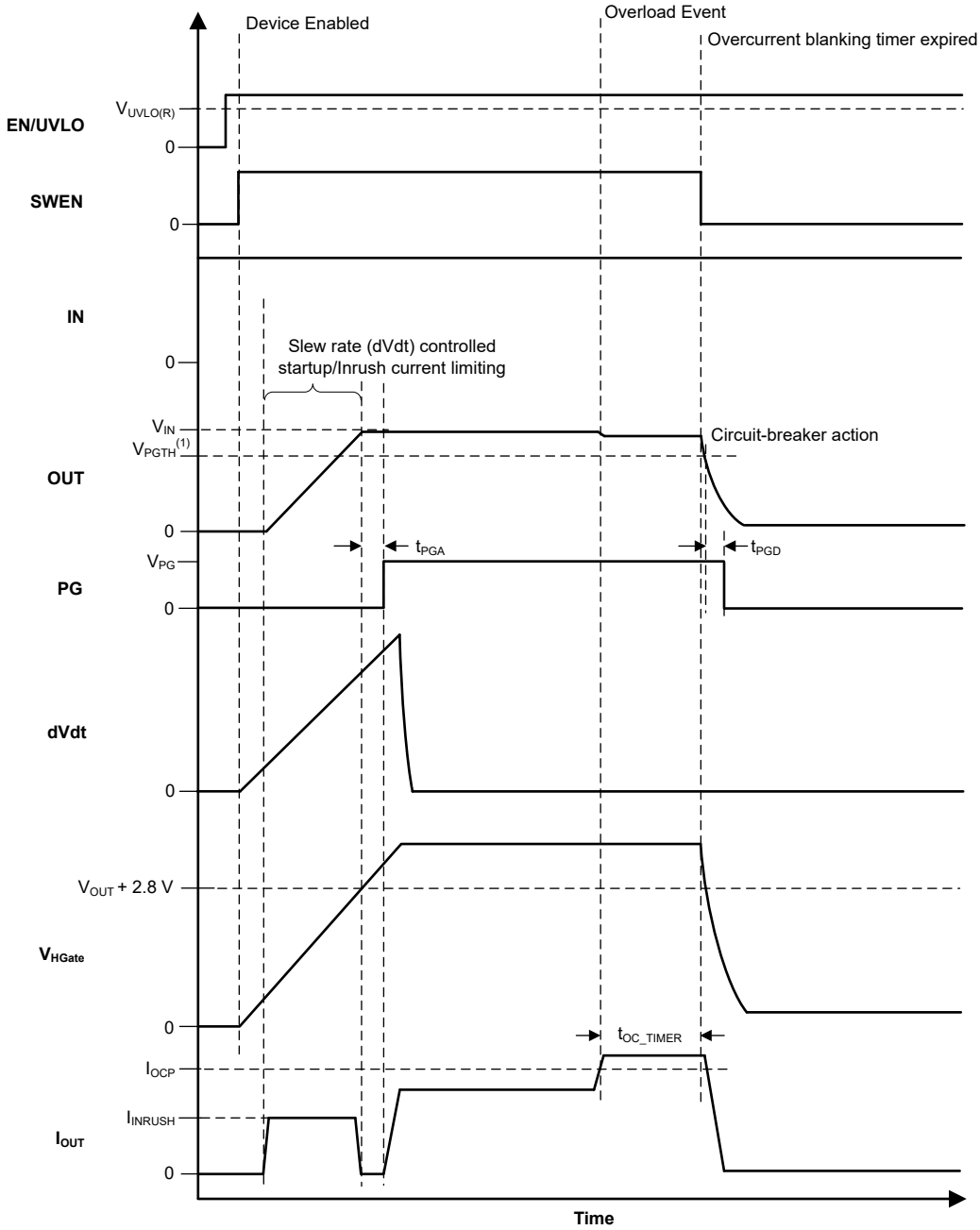

(1) Depends on VOUT_PGTH register setting

Figure 7-7. TPS1689x PG Timing Diagram

Note

When there is no supply to the device, the PG pin is expected to stay low. However, there is no active pulldown in this condition to drive this pin all the way down to 0V. If the PG pin is pulled up to an independent supply which is present even if the device is unpowered, there can be a small voltage seen on this pin depending on the pin sink current, which is a function of the pullup supply voltage and resistor. Minimize the sink current to keep this pin voltage low enough not to be detected as a logic HIGH by associated external circuits in this condition.

Copyright © 2026 Texas Instruments Incorporated

7.3.10.3 Parallel Device Synchronization (SWEN)

The SWEN pin is a signal which is driven high when the FET must be driven to ON state. When it is driven low (internally or externally), it forces the driver circuit to keep the FET in OFF condition. In a parallel eFuse system, this pin is used by the TPS1689x primary controller to control the other eFuses. It also allows multiple devices in a parallel configuration to synchronize the ON and OFF transitions.

Table 7-4. SWEN Summary

DEVICE STATE	FET DRIVER STATUS	SWEN
Steady-state	ON	H
Inrush	ON	H
Overtemperature shutdown	OFF	L
Auto-retry timer running	OFF	L
Device disabled (V_{EN} < V_{UVLO})	OFF	L
VIN Undervoltage (V_{IN} < V_{UVP} or V_{IN} < VIN_UV_FLT)	OFF	L
VDD Undervoltage (V_{DD} < V_{UVP})	OFF	L
Insertion delay	OFF	L
VIN Overvoltage (V_{IN} > VIN_OV_FLT)	OFF	L
Transient overcurrent	ON	H
Circuit-breaker (persistent overcurrent followed by OC_TIMER expiry)	OFF	L
Fast-trip	OFF	L
Fast-trip response mono-shot running (DEVICE_CONFIG[13] = 1)	OFF	L
Fast-trip response mono-shot expired (DEVICE_CONFIG[13] = 1)	ON	H
FET health fault	OFF	L
External fault (SWEN pulled low by secondary device in parallel chain)	OFF	L (held low by TPS1689x even if secondary device releases the pulldown after some time)
Single Point Failure(IMON/IREF)	OFF	L

The SWEN is an open-drain pin and has an internal pull-up to internal power supply.

The SWEN pin has an internal timeout circuit. If the SWEN is held low (internally or externally) for an extended period of time (tSWENTO), it resets the logic (FAST_REC = 0) so that the next time the device starts up after SWEN goes high, it follows the normal inrush sequence. In other cases, it can bypass the inrush sequence and perform a current limited startup for fast recovery.

In a primary and secondary parallel configuration, the SWEN pin is used by the primary device to control the ON and OFF transitions of the secondary devices. At the same time, it allows the secondary devices to communicate any faults or other conditions which can prevent it from turning on the primary device.

To maintain state-machine synchronization, the devices rely on SWEN level transitions as well as timing for handshakes. This establishes that all the devices turn ON and OFF synchronously and in the same manner (for example, dVdt controlled or current limited start-up). There are also fail-safe mechanisms in the SWEN control and handshake logic to establish the entire chain is turned off safely even if the primary device is unable to take control in case of a fault.

Copyright © 2026 Texas Instruments Incorporated

Note

TI recommends to keep the parasitic loading on the SWEN pin to a minimum to avoid synchronization timing issues.

7.3.11 Stacking Multiple eFuses for Unlimited Scalability

For systems needing higher current than supported by one TPS1689x, it is possible to connect TPS1689x in parallel with one or more TPS1685x devices to deliver the desired total system current. Conventional eFuses do not share current evenly between the eFuses during steady-state due to mismatches in the path resistances (which includes the individual device R_{DSON} variation from part to part, as well as the parasitic PCB trace resistance). This fact can lead to multiple problems in the system:

1. Some devices always carry higher current as compared to other devices, which can result in accelerated failures in the devices and an overall reduction in system operational lifetime.
2. As a result, thermal hotspots form on the board, devices, traces, and vias carrying higher current, leading to reliability concerns for the PCB. In addition, this problem makes thermal modeling and board thermal management more challenging for designers.
3. The devices carrying higher current can hit the individual circuit-breaker threshold prematurely even while the total system load current is lower than the overall circuit-breaker threshold. This action can lead to false tripping of the eFuse chain during normal operation. This has the effect of lowering the current-carrying capability of the parallel chain. In other words, the current rating of the parallel eFuse chain must be de-rated as compared to the sum of the current ratings of the individual eFuses. This de-rating factor is a function of the path resistance mismatch, the number of devices in parallel, and the individual eFuse circuit-breaker accuracy.

The need for de-rating has an adverse impact on the system design. The designer is forced to make one of these trade-offs:

1. Limit the operating load current of the system to below the derated overcurrent threshold of the eFuse chain. Essentially, it means lower platform capabilities than are supported by the power supply (PSU).
2. Increase the overall circuit-breaker threshold to allow the desired system load current to pass through without tripping. As a consequence, the power supply (PSU) must be oversized to deliver higher currents during faults to account for the degradation of the overall circuit-breaker accuracy.

In either case, the system deals with poor power supply utilization, which can mean sub-best system throughput or increased installation and operating costs, or both.

The TPS1689x and TPS1685x devices use a proprietary technique to address these problems and provide unlimited scalability by paralleling as many eFuses as needed. This is incorporated without significant current imbalance or any degradation in accuracy.

For this scheme to work correctly, the devices must connect in the following manner:

- The SWEN pins of all the devices connect together.
- The IMON pins of all the devices need to connect together. The R_{IMON} resistor value on the combined IMON pin can be calculated using Equation 8.

$$R_{IMON} = \frac{V_{IREF}}{G_{IMON} \times I_{OCP(TOTAL)}} \quad (8)$$

- The IREF pins of all the devices need to connect together. The TPS1689x generates the V_{IREF} reference voltage for the whole chain using its internal DAC which can be programmed using PMBus® writes to the VIREF register. This allows the overcurrent protection thresholds to be dynamically adjusted during system operation. It is also possible to drive the IREF pin using a low impedance external precision voltage reference.
- The start-up current limit and active current sharing threshold for each device is fixed to $I_{start\text{-}up}$. Each device limits it to this value must the current try to exceed $I_{start\text{-}up}$.

Copyright © 2026 Texas Instruments Incorporated

Note

1. The active current sharing scheme is engaged when the current through any eFuse while in steady-state exceeds the individual current sharing threshold set by the R_{ILIM} based on Equation 9.

$$R_{ILIM} = \frac{1.1 \times V_{IREF}}{3 \times G_{ILIM} \times I_{LIM(ACS)}} \quad (9)$$

2. The active current sharing scheme is disengaged when the total system current exceeds the system overcurrent (circuit-breaker) threshold ($I_{OCP(TOTAL)}$).

7.3.11.1 Current Balancing During Start-Up

The TPS1689x implements a proprietary current balancing mechanism during start-up, which allows TPS1689x and TPS1685x devices connected in parallel to share the inrush current and distribute the thermal stress across all the devices. This feature helps to complete a successful start-up with all the devices and avoid a scenario where some of the eFuses hit thermal shutdown prematurely. This in effect increases the inrush current capability of the parallel chain. The improved inrush performance makes it possible to support very large load capacitors on high current platforms without compromising the inrush time or system reliability.

7.3.12 Quick Output Discharge(QOD)

The TPS1689x has an integrated output discharge function which discharges the capacitors on the OUT pin using an internal constant current (I_{QOD}) sink path to GND. The output discharge function is activated when the EN/UVLO is held low ($V_{SD(F)} < V_{EN} < V_{UVLO(F)}$) for a minimum interval (t_{QOD}). The output discharge function helps to rapidly remove the residual charge left on large output capacitors and prevents the bus from staying at some undefined voltage for extended periods of time. The output discharge is disengaged when $V_{OUT} < V_{FB}$ or if the device detects a fault.

The output discharge function can result in excessive power dissipation inside the device leading to an increase in junction temperature (T_J). The output discharge is disabled if the junction temperature (T_J) crosses the device overtemperature threshold (TSD) to avoid long-term degradation of the part.

Note

In a primary and secondary parallel eFuse configuration, TI recommends to hold EN/UVLO voltage below the $V_{UVLO(F)}$ threshold of the secondary eFuse to activate output discharge for all the eFuses in the chain.

7.3.13 Write Protect Feature(WP#)

WP# allows for pin control to disable PMBUS write access for enhanced protection. In addition to the software control using the PMBUS register MFR_WRITE_PROTECT, this provides a hardware pin control to disable write access to PMBUS. The pin control has higher priority than the MFR_WRITE_PROTECT register. Connecting the WP# pin to ground disables write access to PMBUS registers. If this pin is floating, the MFR_WRITE_PROTECT register controls write access to PMBUS registers.

7.3.14 PMBus® Digital Interface

The TPS1689x is a PMBus® target device with an embedded digital telemetry controller block. This enables bi-directional communication with a host controller using a pre-defined set of commands to control, configure, monitor and debug the system.

The TPS1689x is compliant with PMBus® specifications version 1.3 Part I and Part II.

7.3.14.1 PMBus® Device Addressing

The TPS1689x uses 7-bit I2C device addressing. Up to 25 different addresses can be generated using different pin-strapping combinations on the ADDR0 and ADDR1 pins as shown in Table 7-5. This allows multiple devices to connect to the same I2C bus.

Table 7-5. TPS1689x PMBus® Address Decoding

ADDR0 PIN	ADDR1 PIN	PMBus® DEVICE ADDRESS
Open	Open	0x40 (Default). Can be overwritten with a user defined address programmed into PMBUS_ADDR register in the Config NVM space.
Open	GND	0x41
Open	75kΩ to GND	0x42
Open	150kΩ to GND	0x43
Open	267kΩ to GND	0x44
GND	Open	0x45
GND	GND	0x46
GND	75kΩ to GND	0x47
GND	150kΩ to GND	0x48
GND	267kΩ to GND	0x49
75kΩ to GND	Open	0x4A
75kΩ to GND	GND	0x4B
75kΩ to GND	75kΩ to GND	0x4C
75kΩ to GND	150kΩ to GND	0x4D
75kΩ to GND	267kΩ to GND	0x4E
150kΩ to GND	Open	0x50
150kΩ to GND	GND	0x51
150kΩ to GND	75kΩ to GND	0x52
150kΩ to GND	150kΩ to GND	0x53
150kΩ to GND	267kΩ to GND	0x54
267kΩ to GND	Open	0x55
267kΩ to GND	GND	0x56
267kΩ to GND	75kΩ to GND	0x57
267kΩ to GND	150kΩ to GND	0x58
267kΩ to GND	267kΩ to GND	0x59

Note

1. TI recommends using low tolerance resistors on ADDR0 and ADDR1 to avoid address decoding errors.
2. TI recommends connecting 10pF capacitors in parallel with resistors on ADDR0 and ADDR1 pins to improve noise immunity for correct address decoding.

7.3.14.2 SMBus™ Protocol

TPS1689x PMBus® interface is implemented over SMBus protocol using an I2C physical interface (SCL, SDA) for robust link. The following features are supported:

- Fast mode support (up to 1MHz I2C clock speed)
- Bus timeout
- Support for Byte, Word and Block Read/Write with and without PEC
- Group command support

Copyright © 2026 Texas Instruments Incorporated

- SMBus Alert output pin ($\overline{\text{SMBA}}$) to alert/interrupt the host during certain system warning/fault events.
- Alert Response Address (ARA) support

7.3.14.3 SMBus™ Message Formats

TPS1689x supports the following SMBus message formats.

Note

All these commands can be used with or without the optional PEC byte.

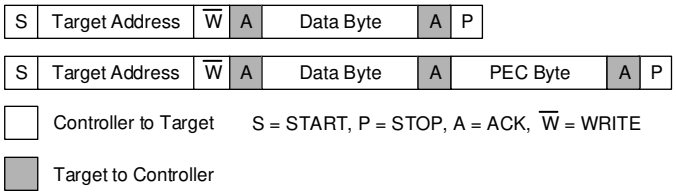

Figure 7-8. Send Byte

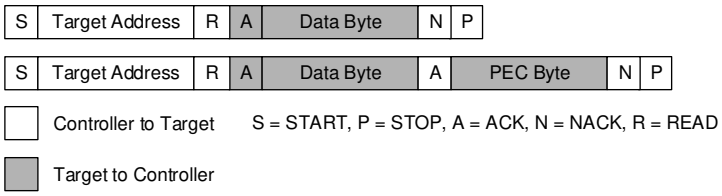

Figure 7-9. Receive Byte

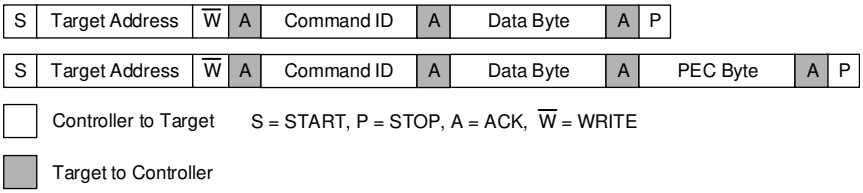

Figure 7-10. Write Byte

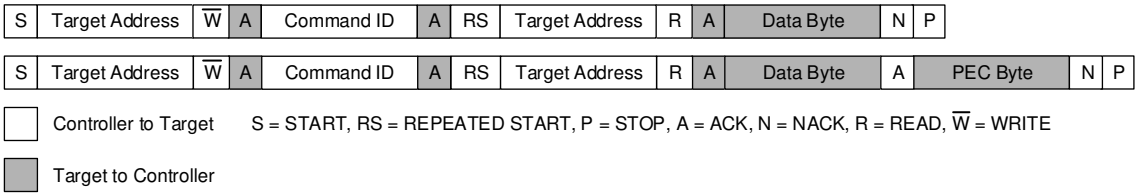

Figure 7-11. Read Byte

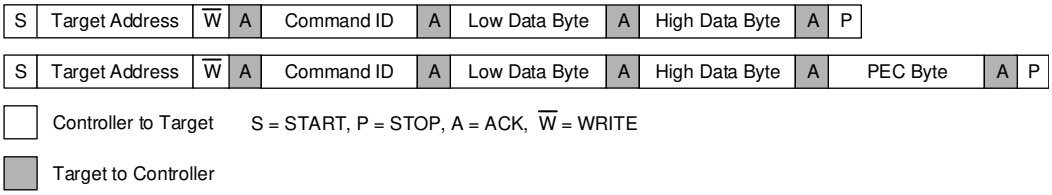

Figure 7-12. Write Word

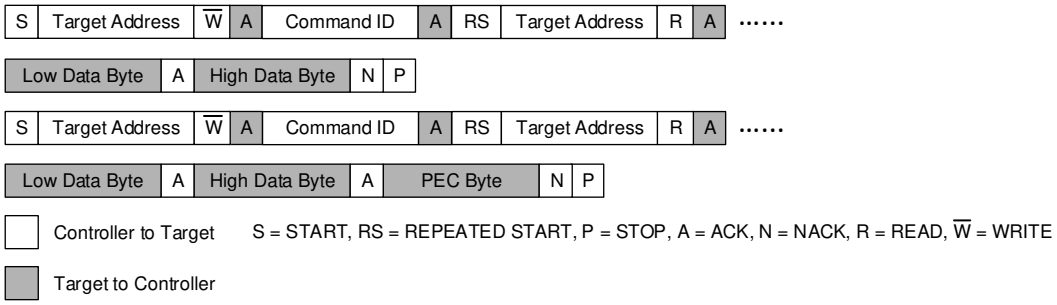

Figure 7-13. Read Word

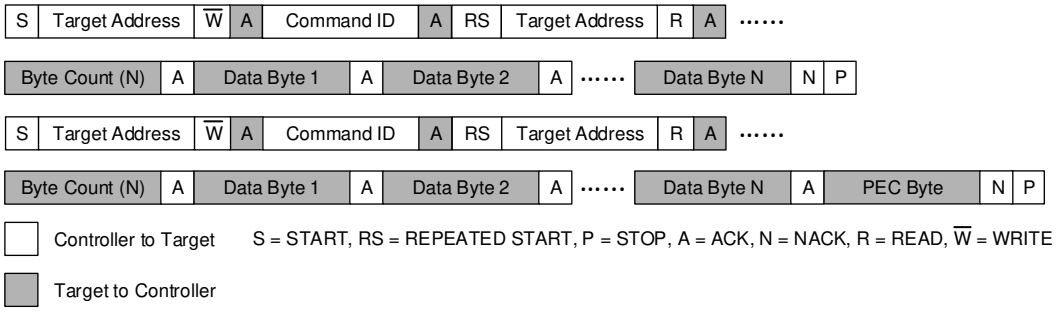

Figure 7-14. Block Read

7.3.14.4 Packet Error Checking

TPS1689x supports optional PEC for all SMBus transactions.

When using packet error checking, an additional byte is added before the stop bit in each transaction.

For reads, the PEC byte is read from the target and the controller compares it to its own PEC byte calculation. For writes, the PEC byte is sent to the target from the controller, and the target compares it to its own PEC byte calculation.

After the comparison, if the PEC bytes differ, the target detects a PEC error. Thereafter, it takes the following actions as per the PMBus® Specification:

- Does not respond to or act upon the command
- Flushes the command code and any received data
- Sets the CML_ERR bit in the STATUS_BYTE register
- Sets the INV_PEC bit in the STATUS_CML register

and

- Notifies the controller of a fault condition by pulling the $\overline{\text{SMBA}}$ line low

7.3.14.5 Group Commands

As required by PMBus® specification, TPS1689x supports the Group Command Protocol. The Group Command Protocol is used to send commands to more than one PMBus® target device. The commands are sent in one continuous transmission. When the target devices detect the STOP condition that ends the sending of commands, the target devices all begin executing the received command.

It is not necessary that all target devices receive the same command.

No more than one command can be sent to any one device in one Group Command packet.

The Group Command Protocol must not be used with commands that require the receiving device to respond with data, such as the STATUS_BYTE command.

Copyright © 2026 Texas Instruments Incorporated

The Group Command Protocol uses REPEATED START conditions to separate commands for each device. The Group Command Protocol begins with the START condition, followed by the seven bit address of the first target device to receive a command and then by the write bit zero (0). The secondary device ACKs and the host controller sends a command with the associated data byte or bytes.

After the last data byte is sent to the first device, the host controller does NOT send a STOP condition. Instead, it sends a REPEATED START condition, followed by the seven bit address of the second device to receive a command, a write bit and the command code and the associated data bytes.

If, and only if, this is the last target device to receive a command, the host controller sends a STOP condition. Otherwise, the host controller sends a REPEATED START condition and starts transmitting the address of the third device to receive a command.

This process continues until all target devices have received the command codes, data bytes, and if used and supported, PEC byte. Then when all target devices have received the information, the host controller sends a STOP condition.

If PEC is used, then each target devices sub-packet has a PEC byte, computed only for that devices sub-packet, including that target devices address.

When the target devices that received a command through this protocol detect the STOP condition, the devices begin execution immediately of the received command.

When using Packet Error Checking with the Group Command Protocol, the PEC byte is calculated using only the address, command and data bytes for each target device. For example, PEC 1 is calculated using Device Address 1 including the Write bit, Command Code 1, and the data associated with Command Code 1. PEC 1 need only be calculated by the device at Device Address 1.

Similarly, PEC Byte 2 is calculated using Device Address 2 including the Write bit, Command Code 2, and the data associated with Command Code 2. Device 1 must not continue calculating PEC 1 after it sees the Repeated Start.

7.3.14.6 SMBus Alert Response Address (ARA)

When there are multiple target devices on the bus with the $\overline{\text{SMBA}}$ pins also tied together, if one or more target devices assert the $\overline{\text{SMBA}}$, the host controller needs a way to identify the target devices on the bus. It does so using the ARA mechanism, which is initiated by sending a read command to the ARA broadcast address 0x0C.

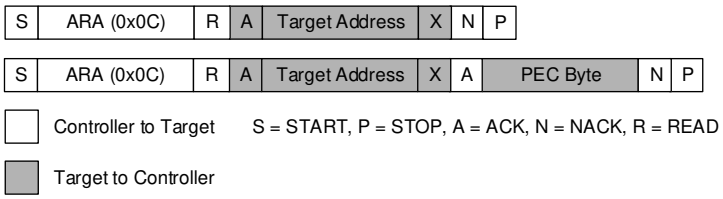

Figure 7-15. ARA Message Protocol

The ARA Automatic Mask is a mask that is set in response to a successful ARA read. An ARA read operation returns the PMBus® address of the lowest addressed target device on the bus that has its $\overline{\text{SMBA}}$ asserted. A successful ARA read means that this target device is the one that returned its address. When a target device responds to the ARA read, it releases the $\overline{\text{SMBA}}$ signal. When the last target device on the bus that has an $\overline{\text{SMBA}}$ set has successfully reported its address, the $\overline{\text{SMBA}}$ signal will de-asserted.

The way that the TPS1689x releases the $\overline{\text{SMBA}}$ signal is by setting the ARA Automatic mask bit for all fault conditions present at the time of the ARA read. All status registers still show the fault condition, but it does not generate an $\overline{\text{SMBA}}$ alert on that fault again until the ARA Automatic mask clears by the host issuing the CLEAR_FAULTS command to this part. This must be done as a routine part of servicing an $\overline{\text{SMBA}}$ condition on a part, even if the ARA read is not done.

Copyright © 2026 Texas Instruments Incorporated

7.3.14.7 PMBus Commands

Table 7-6 shows the list of PMBus® commands supported by the TPS1689x eFuse.

Table 7-6. TPS1689x PMBus Commands List

COMMAND NAME	CODE	TYPE	DESCRIPTION	PMBus®TRANSACTION	DEFAULT VALUE	STORED IN ON-CHIP NON-VOLATILE MEMORY	STORED IN EEPROM
OPERATION	01h	Control	eFuse ON/OFF control	Read/Write byte with PEC	0x80	N/A	N/A
CLEAR_FAULTS	03h	Control	Clear all fault status bits and Blackbox RAM	Send byte with PEC	N/A	N/A	N/A
RESTORE_FACTORY_DEFAULTS	12h	Control	Initialize/Reset all configuration registers to the factory default values	Send byte with PEC	N/A	N/A	N/A
STORE_USER_ALL	15h	Control	Store configuration values to NVM/EEPROM	Send byte with PEC	N/A	N/A	N/A
RESTORE_USER_ALL	16h	Control	Initialize all configuration registers with the user programmed values stored in NVM/EEPROM	Send byte with PEC	N/A	N/A	N/A
BB_ERASE	F5h	Control	Erase Blackbox data in external EEPROM	Send byte with PEC	N/A	N/A	N/A
FETCH_BB_EEPROM	F6h	Control	Fetch Blackbox EEPROM contents into internal shadow registers	Send byte with PEC	N/A	N/A	N/A
CLEAR_BB_RAM	FCh	Control	Clears the contents of bbox RAM	Send byte with PEC	N/A	N/A	N/A
POWER_CYCLE	D9h	Control	Power down output and restart after a delay programmed through the RETRY_CONFIG register	Send byte with PEC	N/A	N/A	N/A
MFR_WRITE_PROTECT	F8h	Control	Enable/Disable write protection for OPERATION and POWER_CYCLE commands, configuration registers, NVM, and EEPROM	Read/write byte with PEC	0x00	N/A	N/A
CAPABILITY	19h	Telemetry	Supported PMBus® features	Read byte with PEC	0xD0	Y	N
STATUS_BYTE	78h	Telemetry	Status register lower byte	Read byte with PEC	Undefined	N	N
STATUS_WORD	79h	Telemetry	Status register word	Read word with PEC	Undefined	N	Y
STATUS_OUT	7Ah	Telemetry	OUT bus status	Read byte with PEC	Undefined	N	N
STATUS_IOUT	7Bh	Telemetry	OUT current status	Read byte with PEC	Undefined	N	N
STATUS_INPUT	7Ch	Telemetry	IN bus status	Read byte with PEC	Undefined	N	Y
STATUS_TEMP	7Dh	Telemetry	Device temperature status	Read byte with PEC	Undefined	N	N
STATUS_CML	7Eh	Telemetry	Communications, Memory, Logic status	Read byte with PEC	Undefined	N	N
STATUS_MFR_SPECIFIC	80h	Telemetry	Manufacturer specific fault status	Read byte with PEC	Undefined	N	Y

Copyright © 2026 Texas Instruments Incorporated

Table 7-6. TPS1689x PMBus Commands List (continued)

COMMAND NAME	CODE	TYPE	DESCRIPTION	PMBus®TRANSACTION	DEFAULT VALUE	STORED IN ON-CHIP NON-VOLATILE MEMORY	STORED IN EEPROM
STATUS_MFR_SPECIFIC_2	F3h	Telemetry	Additional manufacturer specific fault status	Read word with PEC	0x00	N	N
PMBUS_REVISION	98h	Telemetry	PMBus® Specifications Part I and II rev 1.3	Read byte with PEC	0x33	Y	N
MFR_ID	99h	Telemetry	Manufacturer name	Block read 2 bytes with PEC	"TI"	Y	N
MFR_MODEL	9Ah	Telemetry	Device name	Block read 8 bytes with PEC	"TPS1689x"	Y	N
MFR_REVISION	9Bh	Telemetry	Device revision	Block read 1 byte with PEC	0x01	Y	N
READ_VIN	88h	Telemetry	Input voltage	Read word with PEC	Undefined	N	N
READ_VOUT	8Bh	Telemetry	Output voltage	Read word with PEC	Undefined	N	N
READ_IIN	89h	Telemetry	Input current	Read word with PEC	Undefined	N	N
READ_TEMPERATURE_1	8Dh	Telemetry	Device temperature	Read word with PEC	Undefined	N	N
READ_VAUX	D0h	Telemetry	Auxiliary analog input voltage	Read word with PEC	Undefined	N	N
READ_PIN	97h	Telemetry	Instantaneous input power	Read word with PEC	Undefined	N	N
READ_EIN	86h	Telemetry	Accumulated input energy	Block read 6 bytes with PEC	Undefined	N	N
READ_VIN_AVG	DCh	Telemetry	Average input voltage	Read word with PEC	Undefined	N	N
READ_VIN_MIN	D1h	Telemetry	Minimum input voltage	Read word with PEC	Undefined	N	N
READ_VIN_PEAK	D2h	Telemetry	Peak input voltage	Read word with PEC	Undefined	N	Y
READ_VOUT_AVG	DDh	Telemetry	Average output voltage	Read word with PEC	Undefined	N	N
READ_VOUT_MIN	DAh	Telemetry	Minimum output voltage	Read word with PEC	Undefined	N	N
READ_IIN_AVG	DEh	Telemetry	Average input current	Read word with PEC	Undefined	N	N
READ_IIN_PEAK	D4h	Telemetry	Peak input current	Read word with PEC	Undefined	N	Y
READ_TEMP_AVG	D6h	Telemetry	Average device temperature	Read word with PEC	Undefined	N	N
READ_TEMP_PEAK	D7h	Telemetry	Peak device temperature	Read word with PEC	Undefined	N	Y
READ_PIN_AVG	DFh	Telemetry	Average input power	Read word with PEC	Undefined	N	N
READ_PIN_PEAK	D5h	Telemetry	Peak input power	Read word with PEC	Undefined	N	N
READ_SAMPLE_BUF	D8h	Telemetry	ADC sample buffer	Block read 64 bytes with PEC	Undefined	N	N
READ_BB_RAM	FDh	Telemetry	Blackbox RAM registers	Block read 7 bytes with PEC	Undefined	N	Y
READ_BB_EEPROM	F4h	Telemetry	Blackbox EEPROM content	Block read 16 bytes with PEC	Undefined	N	Y
BB_TIMER	FAh	Telemetry	Blackbox tick timer	Read byte with PEC	Undefined	N	Y

Copyright © 2026 Texas Instruments Incorporated

Table 7-6. TPS1689x PMBus Commands List (continued)

COMMAND NAME	CODE	TYPE	DESCRIPTION	PMBus®TRANSACTION	DEFAULT VALUE	STORED IN ON-CHIP NON-VOLATILE MEMORY	STORED IN EEPROM
PMBUS_ADDR	FBh	Configuration	PMBus® device address for ADDR0 = Open and ADDR1 = Open setting	Read/write byte with PEC	0x40	Y	Y
VIN_UV_WARN	58h	Configuration	Input undervoltage warning threshold	Read/write word with PEC	0x0020	N	N
VIN_UV_FLT	59h	Configuration	Input undervoltage fault threshold	Read/write word with PEC	0x001F	Y	Y
VIN_OV_WARN	57h	Configuration	Input overvoltage warning threshold	Read/write word with PEC	0x00A4	N	N
VIN_OV_FLT	55h	Configuration	Input overvoltage fault threshold	Read/write word with PEC	0x00AF	Y	Y
VOUT_UV_WARN	43h	Configuration	Output undervoltage warning threshold	Read/write word with PEC	0x0020	N	N
VOUT_PGTH	5Fh	Configuration	Output threshold for Power Good de-assertion	Read/write word with PEC	0x001D	Y	Y
OT_WARN	51h	Configuration	Overtemperature warning threshold	Read/write word with PEC	0x007C	N	N
OT_FLT	4Fh	Configuration	Overtemperature fault threshold	Read/write word with PEC	0x0084	Y	Y
PIN_OP_WARN	6Bh	Configuration	Input overpower warning threshold	Read/write word with PEC	0x0055	N	N
IIN_OC_WARN	5Dh	Configuration	Input overcurrent warning threshold	Read/write word with PEC	0x007F	N	N
VIREF	E0h	Configuration	Reference voltage for current regulation and protection blocks	Read/write byte with PEC	0x32	Y	Y
AUX/TEMP/ EEDATA/EECLK/ GPIOx configuration	E1h	Configuration	AUX/EEDATA/GPIO2 and AUX/EECLK/GPIO1 pin configuration	Read/write byte with PEC	0x00	Y	Y
SMBA_FLT_CONFIG	E2h	Configuration	$\overline{\text{SMBA}}$/$\overline{\text{FLT}}$ pin configuration	Read/write byte with PEC	0x00	Y	Y
ALERT_MASK	DBh	Configuration	SMB Alert assertion mask	Read/write word with PEC	0x0100	N	N
FAULT_MASK	E3h	Configuration	$\overline{\text{FLT}}$ assertion mask	Read/write word with PEC	0x0000	Y	Y
DEVICE_CONFIG	E4h	Configuration	Device configuration	Read/write word with PEC	0x1400	Y	Y
BB_CONFIG	E5h	Configuration	Blackbox configuration	Read/write byte with PEC	0x00	Y	Y
OC_TIMER	E6h	Configuration	Transient overcurrent blanking timer	Read/write byte with PEC	0x14	N	N
RETRY_CONFIG	E7h	Configuration	Auto-retry configuration	Read/write byte with PEC	0x84	Y	Y
ADC_CONFIG_1	E8h	Configuration	ADC Configuration	Read/write byte with PEC	0x00	N	N

Copyright © 2026 Texas Instruments Incorporated

Table 7-6. TPS1689x PMBus Commands List (continued)

COMMAND NAME	CODE	TYPE	DESCRIPTION	PMBus®TRANSACTION	DEFAULT VALUE	STORED IN ON-CHIP NON-VOLATILE MEMORY	STORED IN EEPROM
ADC_CONFIG_2	E9h	Configuration	ADC Configuration	Read/write byte with PEC	0x00	N	N
PK_MIN_AVG	EAh	Configuration	Peak/Min/Average configuration	Read/write byte with PEC	0x00	N	N
PSU_VOLTAGE	ECh	Configuration	PSU nominal voltage	Read/write byte with PEC	0xA3	N	N
INS_DLY	F9h	Configuration	Insertion delay	Read/write byte with PEC	0x00	Y	Y
IMON OFFSET CALIBRATION	F2h	Configuration	Configuration for IMON offset	Read/write byte	0x00	Y	Y
LOAD_IMON_OFFSET	CAh	Control	NA		0x00	Y	Y

7.3.14.7.1 Detailed Descriptions of PMBus® Commands

7.3.14.7.1.1 OPERATION (01h, Read/Write Byte)

OPERATION is a PMBus® standard command that controls the FET inside the eFuse in conjunction with the input from the EN/UVLO pin. This command may be used to switch the eFuse ON and OFF under host control. It is also used to re-enable the eFuse after a fault-triggered shutdown.

This command uses the PMBus® read or write byte protocol.

Table 7-7. OPERATION Command Description

Bit	Name	Value	Description	Default	Access
7	ON	1	*Enable* eFuse output enabled	1	Read/Write
		0	eFuse output disabled		
6:0	RESERVED	0000000	N/A	0000000	

Note

- This command should be preceded by the Section 7.3.14.7.1.10 command to unlock the device first to prevent accidental/spurious writes. If the WP# pin is pulled low, the write access is completely disabled in hardware and MFR_WRITE_PROTECT command has no effect.
- Writing an OFF command followed by an ON command will clear all the fault and warning bits in the status registers. Writing only an ON command after a fault-triggered shutdown will not clear the status registers.
- OFF command engages quick output discharge (QOD).

7.3.14.7.1.2 CLEAR_FAULTS (03h, Send Byte)

CLEAR_FAULTS is a standard PMBus command that resets all latched warning/fault/status flags and de-asserts the $\overline{\text{SMBA}}$ signal. If a fault or warning condition still exists when the CLEAR_FAULTS command is executed, the $\overline{\text{SMBA}}$ signal can re-assert almost immediately or may not de-assert at all. Issuing the CLEAR_FAULTS command alone does not cause the eFuse to switch back ON in the event of a turn-off due to any fault. That must be done by issuing an OPERATION OFF command followed by OPERATION ON command or a

POWER_CYCLE command after the fault condition clears, or through an auto-retry sequence. This command has no effect on Blackbox EEPROM memory contents.

This command uses the PMBus send byte protocol. There is no data byte for this command. This command is write only.

Note

TI recommends sending the CLEAR_FAULTS command after every successful power up of the device to clear the warning and fault bits set in the status registers during initialization, if any. This also establishes the $\overline{\text{SMBA}}$ is de-asserted.

7.3.14.7.1.3 RESTORE_FACTORY_DEFAULTS (12h, Send Byte)

RESTORE_FACTORY_DEFAULTS is a standard PMBus® command that initializes or resets all the configuration RAM registers to the hardware defaults. Read the INIT_DONE bit in the STATUS_MFR_SPECIFIC_2 register to check if initialization is completed successfully.

This command uses the PMBus® send byte protocol. There is no data byte for this command. This command is write only.

Note

This command must be preceded by the Section 7.3.14.7.1.10 command to unlock the device first to prevent accidental/spurious writes. If the WP# pin is pulled low, the write access is completely disabled in hardware and Section 7.3.14.7.1.10 command has no effect.

7.3.14.7.1.4 STORE_USER_ALL (15h, Send Byte)

STORE_USER_ALL is a standard PMBus command that writes the contents of the certain Configuration RAM registers to the respective nonvolatile configuration memory (NVM) or EEPROM locations. The TPS1689 has six one-time programmable banks in the NVM which are available to the users to store the custom configurations. This command tries to write to NVM Bank-1 first if it is not programmed yet. If NVM Bank-1 is already programmed, it tries to write to NVM Bank-2 if it is not programmed and so on until all the six banks are programmed.

If an external EEPROM is available and configured, the STORE_USER_ALL command must be issued seven (7) consecutive times to successfully store the configuration register values into Page-2 of the external the EEPROM during initial setup. After the initial setup, subsequent writes into the external EEPROM require only one issuance of the STORE_USER_ALL command to store the data reliably.

This command uses the PMBus send byte protocol. There is no data byte for this command. This command is write only.

Copyright © 2026 Texas Instruments Incorporated

Note

- This command must be preceded by the MFR_WRITE_PROTECT command to unlock the device first to prevent accidental/spurious writes. If the WP# pin is pulled low, the write access is completely disabled in hardware and MFR_WRITE_PROTECT command has no effect.
- The external EEPROM must be enabled by setting the EXT_EEPROM bit in the DEVICE_CONFIG register. In addition, it is done by configuring two (2) of the four (4) GPIOs as EECLK and EEDATA appropriately in the and registers. Make sure the two (2) selected GPIO pins are physically connected to the EEPROM clock and data pins respectively on the board.
- The MEMORY_FLT bit in the Section 7.3.14.7.1.18 register gets set if the STORE_USER_ALL command is unsuccessful. TI recommends reading the STATUS_CML register after sending the STORE_USER_ALL command to verify whether it is successful or not.
- The TPS16890 eFuse provides six (6) one-time programmable (OTP) NVM banks for user programming, while the TPS16890A eFuse provides five (5) OTP NVM banks. If an external EEPROM is not used, before sending the STORE_USER_ALL command the user must establish that at least one bank of internal NVM is available for programming by reading the CONFIG_NVM_STAT bit in the STATUS_MFR_SPECIFIC_2 register.

7.3.14.7.1.5 RESTORE_USER_ALL (16h, Send Byte)

RESTORE_USER_ALL is a standard PMBus® command that initializes certain configuration RAM registers to the user programmed values from NVM or EEPROM.

This command uses the PMBus® send byte protocol. There is no data byte for this command. This command is write only.

The device follows the following sequence in response to the command:

- If NVM Bank-2 is programmed, the device reads from Bank-2. If the computed checksum matches the saved original checksum, the NVM configuration values are loaded into the respective registers. If the WP# pin is pulled low, the write access is completely disabled in hardware and MFR_WRITE_PROTECT command has no effect.
- Next, if an external EEPROM connects as described in Section 7.3.14.7.1.4, and there is a valid configuration file in Page-2 of the connected EEPROM, the device tries to read from EEPROM Page-2. If the calculated checksum matches the stored checksum, the configuration values from EEPROM is transferred into the device configuration registers.
- If NVM Bank-2 is not programmed, the device reads NVM Bank-1. If the calculated checksum matches the stored checksum, NVM configuration values are loaded into the configuration registers. If NVM Bank-1 is not programmed, factory default values are retained in the registers.

Note

- This command must be preceded by the MFR_WRITE_PROTECT command to unlock the device first to prevent accidental/spurious writes.
- Read the MEMORY_FLT bit in the STATUS_CML register and the INIT_DONE bit in the STATUS_MFR_SPECIFIC_2 register to check if initialization is completed successfully.

7.3.14.7.1.6 BB_ERASE (F5h, Send Byte)

BB_ERASE is a manufacturer specific command which fills the EEPROM Page-0 (where Blackbox information is stored) with all zeroes (0).

This command uses the PMBus® send byte protocol. There is no data byte for this command. This command is write only.

Note

This command must be preceded by the MFR_WRITE_PROTECT command to unlock the device first to prevent accidental or spurious writes. If the WP# pin is pulled low, the write access is completely disabled in hardware and MFR_WRITE_PROTECT command has no effect.

7.3.14.7.1.7 FETCH_BB_EEPROM (F6h, Send Byte)

FETCH_BB_EEPROM is a manufacturer specific command which loads the Blackbox contents from the external EEPROM (Page-0) into the Blackbox shadow registers internal to the device. Those values can then be read back through PMBus® using the READ_BB_EEPROM command.

This command uses the PMBus® send byte protocol. There is no data byte for this command. This command is write only.

7.3.14.7.1.8 CLEAR_BB_RAM (FCh, Send Byte)

The CLEAR_BB_RAM command is a manufacturer specific command that clears the blackbox RAM and restores its contents to default values. It is implemented using the PMBus® Send Byte protocol and does not include a data byte. This command is write-only.

Note

This command must be preceded by the MFR_WRITE_PROTECT command to unlock the device first to prevent accidental or spurious writes. If the WP# pin is pulled low, the write access is completely disabled in hardware and MFR_WRITE_PROTECT command has no effect.

7.3.14.7.1.9 POWER_CYCLE (D9h, Send Byte)

POWER_CYCLE is a manufacturer specific command used to power down the output and power ON after a delay. The delay can be configured using the RETRY_CONFIG register. Execution of this command initiates a Power Path reset. The device state and register contents remain unchanged. Additionally, the command activates the QOD (Quick Output Discharge) mechanism to discharge the output load. The device verifies that the output is fully discharged before resuming normal operation.

This command uses the PMBus® send byte protocol. There is no data byte for this command. This command is write only.

Note

- This command should be preceded by the MFR_WRITE_PROTECT command to unlock the device first to prevent accidental/spurious writes. If the WP# pin is pulled low, the write access is completely disabled in hardware and MFR_WRITE_PROTECT command has no effect.
- If the device is turned OFF due a fault, issuing a POWER_CYCLE command alone doesn't alter the state of the device. This command should be preceded by a CLEAR_FAULTS command.

7.3.14.7.1.10 MFR_WRITE_PROTECT (F8h, Read/Write Byte)

MFR_WRITE_PROTECT is a manufacturer specific command used to lock or unlock access to the configuration registers, NVM and EEPROM to prevent accidental/spurious PMBus® writes from altering the device configuration. It also blocks access to the OPERATION, RESTORE_FACTORY_DEFAULTS, STORE_USER_ALL, RESTORE_USER_ALL, BB_ERASE, and POWER_CYCLE commands to prevent accidental/spurious PMBus® writes from altering the device state. The device is locked by default after power-up or enable recycling.

This command uses the PMBus® read or write byte protocol.

A valid unlock command contains a data byte with Bit[7] equal to one (1) followed by a 7-bit password that matches a predefined pattern of 0x0100010. Writing 0xA2h in the MFR_WRITE_PROTECT register unlocks the device. Writing 0x00h in the MFR_WRITE_PROTECT register locks the device.

Copyright © 2026 Texas Instruments Incorporated

Note

- Writing a data byte other than 0xA2h or 0x00h in the MFR_WRITE_PROTECT register does not change the lock status of the device, but generates a CML error and set the INV_DATA bit in STATUS_CML register.
- If the WP# pin is pulled low, the write access is completely disabled in hardware and MFR_WRITE_PROTECT command has no effect.

Table 7-8. MFR_WRITE_PROTECT Command Description

Bit	Name	Value	Description	Default	Access
7	UNLOCK	0	*Lock Bit* Configuration register/NVM space locked	0	Read/Write
		1	Configuration register/NVM space unlocked		
6:0	PWD	0000000	*Password* Configuration register/NVM space locked	0000000	
		0100010	Configuration register/NVM space unlocked		
		0000011	Configuration register/NVM space locked until Power-On Reset		

7.3.14.7.1.11 CAPABILITY (19h, Read Byte)

CAPABILITY is a standard PMBus® command that allows a host system to determine some key capabilities of a PMBus® device.

This command uses the PMBus® read byte protocol. There is one data byte formatted as shown in Table 7-9.

Table 7-9. CAPABILITY Register Description

Bit	Name	Value	Description	Default	Access
7	PEC Support	1	*Packet Error Correction (PEC) support* PEC supported	1	Read
		0	PEC not supported		
6:5	Bus Speed	00	*Maximum bus interface speed* 100kHz	10	
		01	400kHz		
		10	1MHz		
		11	Reserved for future use		
4	$\overline{\text{SMBA}}$/ARA	1	*SMB Alert/Alert Response Address support* $\overline{\text{SMBA}}$/ARA supported	1	
		0	$\overline{\text{SMBA}}$/ARA not supported		
3:0	Reserved	0000	Reserved	0000	

7.3.14.7.1.12 STATUS_BYTE (78h, Read Byte)

The TPS1689 implements all PMBus® status registers relevant to an eFuse/Hot-swap power controller. Figure 7-16 shows a bit map of the TPS1689 status register.

STATUS_BYTE is a standard PMBus® command that returns one byte of information with a summary of the most critical faults.

This command uses the PMBus® read byte protocol.

To clear bits in this register, the underlying faults must be removed and the CLEAR_FAULTS command must be issued by the host controller.

Copyright © 2026 Texas Instruments Incorporated

Table 7-10. STATUS_BYTE Register Description

Bit	Name	Value	Description	Default	Live/Latched	Access
7	BUSY	1	*Device busy status* Device is busy	0	Live	Read
		0	Device is not busy			
6	FET_OFF	1	*FET drive status* FET gate driver disabled	0	Live	
		0	FET gate drive enabled			
5:4	Reserved	00	Reserved	00		
3	VIN_UV_FLT	1	*VIN undervoltage* VIN UV fault detected	0	Latched	
		0	VIN UV fault not detected			
2	STATUS_TEMP	1	*Overtemperature fault* Active bits set in STATUS_TEMP register	0	Live	
		0	No active bits set in STATUS_TEMP register			
1	CML_ERR	1	*Communication, Memory or Logic error* Active bits set in STATUS_CML register	0	Live	
		0	No active bits set in STATUS_CML register			
0	NONE_OF_THE_ABOVE	1	An event other than the ones listed in bits 7:1 has occurred	0	Live	
		0	An event other than the ones listed in bits 7:1 has not occurred			

7.3.14.7.1.13 STATUS_WORD (79h, Read Word)

STATUS_WORD is a standard PMBus® command that returns two bytes of information with a summary of the eFuse fault conditions.

This command uses the PMBus® read word protocol.

To clear the bits in this register, the underlying faults must be removed and the CLEAR_FAULTS command must be issued by the host controller.

The low byte of STATUS_WORD is the same register as the STATUS_BYTE command. The STATUS_WORD register contents are described in Figure 7-16 and Table 7-11.

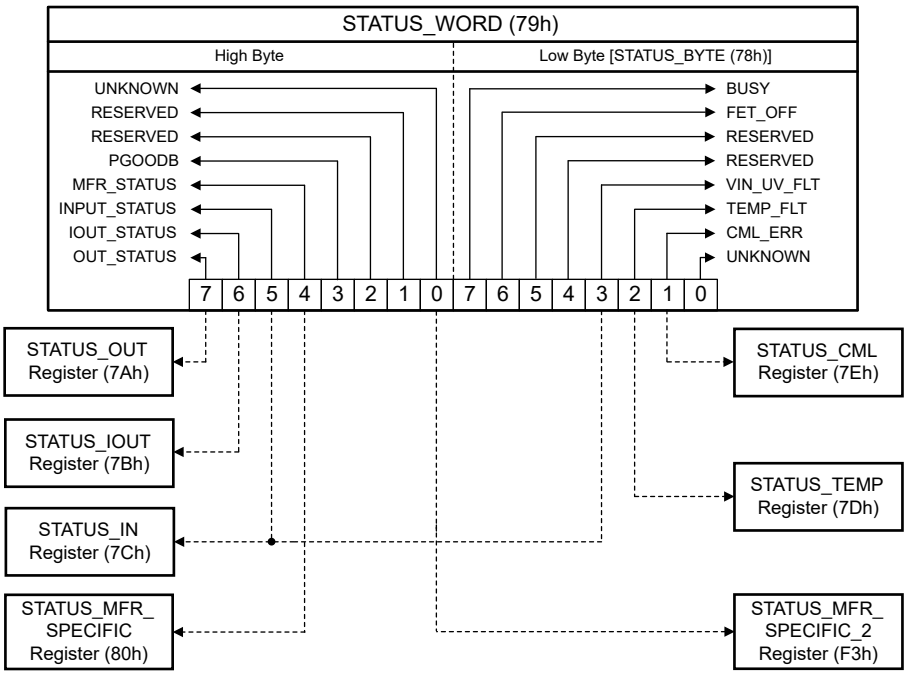

Figure 7-16. Status Register Bit Map

Copyright © 2026 Texas Instruments Incorporated

Table 7-11. STATUS_WORD Register Description

Bit	Name	Value	Description	Default	Access
15	OUT_STATUS	1	*OUTPUT fault status* Active bits set in the STATUS_OUT register	0	Read
		0	No active bits set in the STATUS_OUT register		
14	IOUT_STATUS	1	*IOUT fault status* Active bits set in the STATUS_IOUT register	0	
		0	No active bits set in the STATUS_IOUT register		
13	INPUT_STATUS	1	*INPUT fault status* Active bits set in the STATUS_INPUT register	0	
		0	No active bits set in the STATUS_INPUT register		
12	MFR_STATUS	1	*Manufacturer specific fault status* Active bits set in the STATUS_MFR_SPECIFIC register	0	
		0	No active bits set in the STATUS_MFR_SPECIFIC register		
11	PGOODB	1	*Power Good status* PGOOD de-asserted	1	
		0	PGOOD asserted		
10:9	Reserved	00	Reserved	00	
8	UNKNOWN	1	An event other than the ones listed in bits 15:1 has occurred	0	
		0	An event other than the ones listed in bits 15:1 has not occurred		
7:0	Same as STATUS_BYTE register				

Figure 7-17 depicts the relationship between the STATUS_BYTE register, the STATUS_WORD register and the more detailed status registers.

Based on the information in these bytes, the host can get more insight by reading the appropriate status registers.

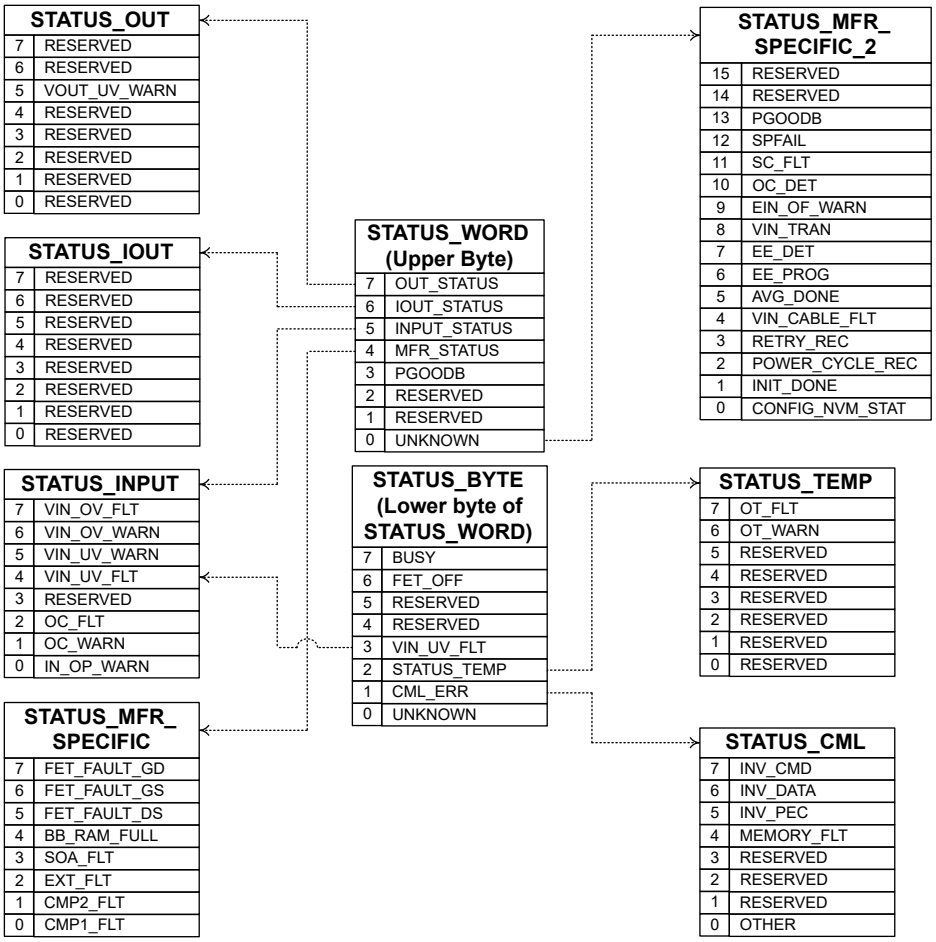

Figure 7-17. Summary of the Status Registers

7.3.14.7.1.14 STATUS_OUT (7Ah, Read Byte)

STATUS_OUT is a standard PMBus® command that returns one data byte with contents as shown in Table 7-12.

This command uses the PMBus® read byte protocol.

To clear the bits in this register, the underlying faults must be removed and the CLEAR_FAULTS command must be issued by the host controller.

Copyright © 2026 Texas Instruments Incorporated

Table 7-12. STATUS_OUT Register Description

Bit	Name	Value	Description	Default	Access
7:6	Reserved	00	Reserved	00	Read
5	VOUT_UV_WARN	1	*VOUT undervoltage warning* VOUT UV warning threshold crossed	0	
		0	VOUT UV warning threshold not crossed		
4:0	Reserved	00	Reserved	00	

7.3.14.7.1.15 STATUS_IOUT (7Bh, Read Byte)

STATUS_IOUT is a standard PMBus® command that returns one data byte with contents as shown in Table 7-13.

Table 7-13. STATUS_IOUT Register Description

Bit	Name	Value	Description	Default	Access
7:0	Reserved	00000000	Reserved	000000000	Read

Note

The input and output current information is identical for this device, so all the bits in this register are reserved. Refer to the STATUS_INPUT register instead for status information.

7.3.14.7.1.16 STATUS_INPUT (7Ch, Read Byte)

STATUS_INPUT is a standard PMBus® command that returns the status flags related to input voltage, current, and power as shown in Table 7-14.

This command uses the PMBus® read byte protocol.

To clear the bits in this register, the underlying faults must be removed and the CLEAR_FAULTS command must be issued by the host controller.

Table 7-14. STATUS_INPUT Register Description

Bit	Name	Value	Description	Default	Access
7	VIN_OV_FLT	1	*VIN overvoltage fault* VIN OV fault threshold crossed	0	Read
		0	VIN OV fault threshold not crossed		
6	VIN_OV_WARN	1	*VIN overvoltage warning* VIN OV warning threshold crossed	0	Read
		0	VIN OV warning threshold not crossed		

Table 7-14. STATUS_INPUT Register Description (continued)

Bit	Name	Value	Description	Default	Access
5	VIN_UV_WARN	1	*VIN undervoltage warning* VIN UV warning threshold crossed	0	Read
		0	VIN UV warning threshold not crossed		
4	VIN_UV_FLT	1	*VIN undervoltage fault* VIN UV fault threshold crossed	0	Read
		0	VIN UV fault threshold not crossed		
3	Reserved	0	Reserved	0	Read
2	OC_FLT	1	*Overcurrent fault (Inrush & steady-state)* Input current crossed overcurrent fault threshold (Inrush) or OC_TIMER expired after input current crossed overcurrent fault threshold (steady-state)	0	Read
		0	Input current below overcurrent fault threshold or OC_TIMER not expired		

Copyright © 2026 Texas Instruments Incorporated

Table 7-14. STATUS_INPUT Register Description (continued)

Bit	Name	Value	Description	Default	Access
1	OC_WARN	1	*Overcurrent warning (Inrush & steady-state)* Input current crossed overcurrent warning threshold	0	Read
		0	Input current below overcurrent warning threshold		
0	IN_OP_WARN	1	*Overpower warning* Input overpower warning threshold crossed	0	Read
		0	Input overpower warning threshold not crossed		

7.3.14.7.1.17 STATUS_TEMP (7Dh, Read Byte)

STATUS_TEMP is a standard PMBus® command that returns the status flags related to the overtemperature fault and warning as shown in Table 7-15.

This command uses the PMBus® read byte protocol.

To clear the bits in this register, the underlying faults must be removed and the CLEAR_FAULTS command must be issued by the host controller.

Table 7-15. STATUS_TEMP Register Description

Bit	Name	Value	Description	Default	Access
7	OT_FLT	1	*Overtemperature fault* Device temperature crossed overtemperature fault threshold (TSD/OT_FLT)	0	Read
		0	Device temperature below overtemperature fault threshold (TSD/OT_FLT)		
6	OT_WARN	1	*Overtemperature warning* Device temperature crossed overtemperature warning threshold	0	
		0	Device temperature below overtemperature warning threshold		
5:0	Reserved	000000	Reserved	000000	

7.3.14.7.1.18 STATUS_CML (7Eh, Read Byte)

STATUS_CML is a standard PMBus® command that returns the status flags related to communication, logic, and memory faults as shown in Table 7-16.

This command uses the PMBus® read byte protocol.

To clear the bits in this register, the underlying faults must be removed and the CLEAR_FAULTS command must be issued by the host controller.

Copyright © 2026 Texas Instruments Incorporated

Table 7-16. STATUS_CML Register Description

Bit	Name	Value	Description	Default	Access
7	INV_CMD	1	*Command status* Invalid/unsupported command received	0	Read
		0	Valid/supported command received		
6	INV_DATA	1	*Data status* Invalid/unsupported data received	0	
		0	Valid/supported data received		
5	INV_PEC	1	*Packet Error Check status* PEC failed	0	
		0	PEC passed		
4	MEMORY_FLT	1	*Memory fault status* Memory related fault - Configuration Memory Content Invalid (Empty or corrupted) OR STORE_USER_ALL or RESTORE_USER_ALL commands unsuccessful	0	
		0	No memory related fault		
3:2	Reserved	000	Reserved	000	
1	NONE_OF_ABOVE	1	A communication fault other than the ones listed in the table has occurred	0	
		0	A communication fault other than the ones listed in the table has not occurred		
0	OTHER	Other communications failure		0	

Note

The $\overline{\text{SMBA}}$ signal may be asserted due to a CML fault if the CML_ERR is unmasked in the ALERT_MASK register. If there are multiple PMBus® devices on the same bus, TI recommends unmasking the CML_ERR only while communicating with the TPS1689x and masking it at all other times. This prevents TPS1689x from asserting the $\overline{\text{SMBA}}$ due to CML faults generated by other devices on the bus.

7.3.14.7.1.19 STATUS_MFR_SPECIFIC (80h, Read Byte)

STATUS_MFR_SPECIFIC is a standard PMBus® command that returns manufacturer-specific status information as shown in Table 7-17.

This command uses the PMBus® read byte protocol.

To clear the bits in this register, the underlying faults must be removed and the CLEAR_FAULTS command must be issued by the host controller.

Table 7-17. STATUS_MFR_SPECIFIC Register Description

Bit	Name	Value	Description	Default	Access
7	FET_FAULT_GD	1	*FET fault type* Gate to drain fault	0	Read
		0	No gate to drain fault		
6	FET_FAULT_GS	1	*FET fault type* Gate to source fault	0	
		0	No gate to source fault		
5	FET_FAULT_DS	1	*FET fault type* Drain to source fault	0	
		0	No drain to source fault		
4	BB_RAM_FULL	1	*BB RAM fill status* Seven (7) events have been recorded	0	
		0	Seven (7) events not yet recorded		
3	SOA_FLT	1	*FET SOA status* Device turned off due to SOA limit violation	0	
		0	FET operating within SOA limit		
2	EXT_FLT	1	Device turned off due to SWEN pin being pulled low externally by another device in parallel chain	0	
		0	SWEN pin not pulled low externally by another device in parallel chain		
1:0	Reserved	0	Reserved	0	

7.3.14.7.1.20 STATUS_MFR_SPECIFIC_2 (F3h, Read Word)

STATUS_MFR_SPECIFIC_2 is a manufacturer specific command which returns additional status information as shown in Table 7-18.

This command uses the PMBus® read word protocol.

Copyright © 2026 Texas Instruments Incorporated

To clear the bits in this register, the underlying faults must be removed and the CLEAR_FAULTS command must be issued by the host controller.

Table 7-18. STATUS_MFR_SPECIFIC_2 Register Description

Bit	Name	Value	Description	Live/Latched	Default	Access
15:14	Reserved	00	Reserved	N/A	00	Read
13	PGOODB	1	*PGOOD status* PGOOD low	Latched	0	Read
		0	PGOOD high			
12	SPFAIL	1	*Single point failure (ILIM/IMON/IREF)* Single point failure detected	Latched	0	Read
		0	Single point failure not detected			
11	SC_FLT	1	*Short-circuit fault* Short-circuit fault threshold crossed	Latched	0	Read
		0	Short-circuit fault threshold not crossed			
10	OC_DET	1	*Overcurrent detected (Inrush and steady-state)* Input current crossed overcurrent fault threshold but OC_TIMER not expired	Latched	0	Read
		0	Input current below overcurrent fault threshold			
9	EIN_OF_WARN	1	*EIN register overflow* EIN register overflowed	Latched	0	Read
		0	EIN register not overflowed			
8	Reserved	0	N/A	N/A	0	
7	EE_DET	1	*External EEPROM detect status* External EEPROM detected	Latched	0	Read
		0	External EEPROM not detected			

Table 7-18. STATUS_MFR_SPECIFIC_2 Register Description (continued)

Bit	Name	Value	Description	Live/Latched	Default	Access
6	EE_PROG	1	*External EEPROM programmed status* External EEPROM programmed	Latched	0	Read
		0	External EEPROM not programmed			
5	AVG_DONE	1	*Average computation complete status* Average computation done	Live	0	Read
		0	Average computation ongoing			
4	VIN_CABLE_FLT	1	*Input cable fault indication* Cable fault detected	Latched	0	Read
		0	Cable fault not detected			
3	RETRY_REC	1	*Fault recovery/ retry status* Device has recovered from fault through auto-retry	Latched	0	Read
		0	Normal power up, that is, device has not recovered from fault through auto-retry			
2	POWER_CYCLE_REC	1	*Power Cycle command status* Device has recovered from power cycle	Latched	0	Read
		0	Normal power up, that is, Device has not recovered from power cycle			

Copyright © 2026 Texas Instruments Incorporated

Table 7-18. STATUS_MFR_SPECIFIC_2 Register Description (continued)

Bit	Name	Value	Description	Live/Latched	Default	Access
1	INIT_DONE	1	*Register Initialization status* Register Initialization Complete, All default/Config values loaded into RAM	Latched	0	Read
		0	Register Initialization not complete			
0	CONFIG_NVM_STAT	1	*Configuration NVM* Not available to be programmed	Live	0	Read
		0	Available to be programmed			

7.3.14.7.1.21 PMBUS_REVISION (98h, Read Byte)

PMBUS_REVISION is a standard PMBus® command which returns the revision of the PMBus® standard to which the device conforms.

The command has one data byte. Bits[7:4] indicate the revision of PMBus® specification Part I to which the device is compliant. Bits[3:0] indicate the revision of PMBus® specification Part II to which the device is compliant. To access this command, use the PMBus® read byte protocol.

This command returns 0x33h from the TPS1689x eFuse. This implies the device is compliant with Part I rev 1.3 and Part II rev 1.3.

7.3.14.7.1.22 MFR_ID (99h, Block Read)

MFR_ID is a standard PMBus® command that returns the manufacturer name.

This command uses the PMBus® block read protocol with a block size of two (2). This register contains 0x5449h, which represents "TI" in ASCII.

7.3.14.7.1.23 MFR_MODEL (9Ah, Block Read)

MFR_MODEL is a standard PMBus® command that returns the device part number.

This command uses the PMBus® block read protocol with a block size of eight (8). This register contains 0x0054505331363839h, which represents "TPS1689x" in ASCII.

7.3.14.7.1.24 MFR_REVISION (9Bh, Block Read)

MFR_REVISION is a standard PMBus® command that returns the device revision.

This command uses the PMBus® block read protocol with a block size of one (1). This register contains 0x01h.

7.3.14.7.1.25 READ_VIN (88h, Read Word)

READ_VIN is a standard PMBus® command that returns the 10-bit measured input voltage value.

This command uses the PMBus® read word protocol.

Follow the PMBus® DIRECT format conversion using the coefficients in Table 7-65 and Equation 14, to convert the hexadecimal data read from this register into a real-world value in V.

Copyright © 2026 Texas Instruments Incorporated

Table 7-19. READ_VIN Register Description

Bit	Name	Description	Minimum Value	Maximum Value	Access
15:0	READ_VIN	Value measured for input voltage	0x0000 (0V)	0x03FF (87.75V)	Read

7.3.14.7.1.26 READ_VOUT (8Bh, Read Word)

READ_VOUT is a standard PMBus® command that returns the 10-bit measured output voltage value.

This command uses the PMBus® read word protocol.

Follow the PMBus® DIRECT format conversion using the coefficients in Table 7-65 and Equation 14, to convert the hexadecimal data read from this register into a real-world value in V.

Table 7-20. READ_VOUT Register Description

Bit	Name	Description	Minimum Value	Maximum Value	Access
15:0	READ_VOUT	Value measured for output voltage	0x0000 (0V)	0x03FF (87.75V)	Read

7.3.14.7.1.27 READ_IIN (89h, Read Word)

READ_IIN is a standard PMBus® command that returns the 10-bit measured input current value.

This command uses the PMBus® read word protocol.

Follow the PMBus® DIRECT format conversion using the coefficients in Table 7-65 and Equation 14, to convert the hexadecimal data read from this register into a real-world value in A.

Table 7-21. READ_IIN Register Description

Bit	Name	Description	Minimum Value	Maximum Value	Access
15:0	READ_IIN	Value measured for input current	0x0000 (0A)	0x03FF (107142/R_{IMON} A)	Read

7.3.14.7.1.28 READ_TEMPERATURE_1 (8Dh, Read Word)

READ_TEMPERATURE_1 is a standard PMBus® command that returns the 10-bit measured device temperature value.

This command uses the PMBus® read word protocol.

Follow the PMBus® DIRECT format conversion using the coefficients in Table 7-65 and Equation 14, to convert the hexadecimal data read from this register into a real-world value °C.

Table 7-22. READ_TEMPERATURE_1 Register Description

Bit	Name	Description	Minimum Value	Maximum Value	Access
15:0	READ_TEMPERATURE_1	Value measured for device temperature	0x0000 (-229°C)	0x03FF (501°C)	Read

7.3.14.7.1.29 READ_VAUX (D0h, Read Word)

READ_VAUX is a manufacturer specific command that reports the 10-bit measured voltage on the AUX pin.

This command uses the PMBus® read word protocol.

Follow the PMBus® DIRECT format conversion using the coefficients in Table 7-65 and Equation 14, to convert the hexadecimal data read from this register into a real-world value in V.

Copyright © 2026 Texas Instruments Incorporated

Table 7-23. READ_VAUX Register Description

Bit	Name	Description	Minimum Value	Maximum Value	Access
15:0	READ_VAUX	Value measured for auxiliary voltage source connected at the AUX pin	0x0000 (0V)	0x03FF (1.95V)	Read

Note

Voltages greater than or equal to 1.95V to ground are reported as full scale (0x03FFh). Voltages less than or equal to 0V referenced to ground are reported as 0V (0x0000h).

7.3.14.7.1.30 READ_PIN (97h, Read Word)

READ_PIN is a PMBus® standard command which returns the input power (input voltage multiplied by input current).

This command uses the PMBus® read word protocol.

Follow the PMBus® DIRECT format conversion using the coefficients in Table 7-65 and Equation 14, to convert the hexadecimal data read from this register into a real-world value in W.

Table 7-24. READ_PIN Register Description

Bit	Name	Description	Minimum Value	Maximum Value	Access
15:0	READ_PIN	Value measured for input power	0x0000 (0W)	0x03FF (9401785/R_{IMON} W)	Read

7.3.14.7.1.31 READ_EIN (86h, Block Read)

The READ_EIN command is a standard PMBus® command which returns information to the host for computing the accumulated energy and average power consumption by a system powered by the eFuse. The information provided by this command is independent of any device specific averaging period, sampling frequency, or calculation algorithm.

This command uses the PMBus® block read protocol with a block size of six (6).

This command returns six (6) bytes of data. The first two (2) bytes are the two's complement and signed output of an accumulator that continuously sums samples of the instantaneous input power (the product of the samples of the input voltage and input current). These two data bytes are encoded in the DIRECT format as described in Section 7.3.14.10. The accumulator values are scaled so that the units are in “watt-samples”. This value in “watt-samples” must be multiplied by the effective ADC sampling period to obtain the real world value of energy accumulation in joules. If Bit[3] of the DEVICE_CONFIG register is set to high, the effective ADC sampling period is 18µs (typical). Otherwise, it is 11µs (typical) by default.

The third data byte, ROLLOVER_COUNT is a count of rollover events for the accumulator. This byte is an unsigned integer indicating the number of times the accumulator has rolled over from its maximum positive value of 7FFFh to zero. The ROLLOVER_COUNT periodically rolls over from its maximum positive value to zero. It is up to the host to keep track of the state of the ROLLOVER_COUNT and account for the rollovers.

The other three (3) data bytes are a 24-bit unsigned integer that counts the number of samples of the instantaneous input power accumulated until now. This value also rolls over periodically from its maximum positive value to zero.

The combination of the accumulator and the rollover count can overflow within a few seconds. It is left to the host software to detect this overflow and handle it appropriately. Similarly, the sample count value will overflow. However, this event only occurs every five (5) minutes if Bit[3] of the DEVICE_CONFIG register is set to high, otherwise every three (3) minutes.

Table 7-25. READ_EIN Register Description

Byte	Description	Default	Access
0	Power Accumulator Low Byte	0x00	Read
1	Power Accumulator High Byte	0x00	
2	Power Accumulator Rollover Count	0x00	
3	Sample Count Low byte	0x00	
4	Sample Count Mid byte	0x00	
5	Sample Count High byte	0x00	

The host uses the accumulator value and rollover count to calculate the current “energy count” in “watt-samples” using Equation 10.

$$\text{Energy_Count} = (\text{Rollover_Count} \times \text{Accumulator_Roll_Over_Value}) + \text{Accumulator_Value} \tag{10}$$

Where the Accumulator_Roll_Over_Value is the maximum possible positive value of the accumulator plus one (1). It is necessary to add one (1) to the maximum accumulator value to make the average power calculation correctly. The Accumulator_Roll_Over_Value is calculated using Equation 11.

$$\text{Accumulator_Roll_Over_Value} = \frac{1}{m}\left[\left\{(Y_{MAX} + 1) \times 10^{-R}\right\} - b\right] = \frac{1}{m}\left[\left\{\left(2^{15}\right) \times 10^{-R}\right\} - b\right] \tag{11}$$

Table 7-65 includes the "m, b, R" coefficients used in Equation 11. Accumulator_Value is obtained using the coefficients in Table 7-65 and Equation 14. The real world value of energy accumulation in joules is calculated using Equation 12.

$$\text{Accumulated_Energy} = \text{Energy_Count} \times \text{Effective_ADC_Sampling_Period} \tag{12}$$

If Bit[3] of the DEVICE_CONFIG register is set to high, the Effective_ADC_Sampling_Period is 18µs (typical). Otherwise, it is 11µs (typical) by default. The host calculates the average power in watt since the last reading using Equation 13.

$$\text{Average_Power} = \frac{\text{Current_Energy_Count} - \text{Last_Energy_Count}}{\text{Current_Sample_Count} - \text{Last_Sample_Count}} \tag{13}$$

Note

The ADC HI PERF bit in the DEVICE_CONFIG register) defines the ADC internal operating modes. The effective ADC sampling period is 11µs in normal mode and 18µs in high performance mode. The device is configured for normal mode by default. If it is necessary to change the ADC internal modes, it must be done before the downstream loads are enabled. It must not be changed under normal operation. This results in the wrong real world value for energy accumulation.

7.3.14.7.1.32 READ_VIN_AVG (DCh, Read Word)

READ_VIN_AVG is a manufacturer-specific command that reports 10-bit average value of input voltage.

This command uses the PMBus® read word protocol.

Follow the PMBus® DIRECT format conversion using the coefficients in Table 7-65 and Equation 14, to convert the hexadecimal data read from this register into a real-world value in V.

Copyright © 2026 Texas Instruments Incorporated

Table 7-26. READ_VIN_AVG Register Description

Bit	Name	Description	Minimum Value	Maximum Value	Access
15:0	READ_VIN_AVG	Value measured for average input voltage	0x0000 (0V)	0x03FF (87.75V)	Read

The sample count for averaging can be programmed through PMBus® using Bit[2:0] in the PK_MIN_AVG register. The contents of READ_VIN_AVG register can be reset to zero (0x0000h) by setting Bit[6] in the PK_MIN_AVG register.

7.3.14.7.1.33 READ_VIN_MIN (D1h, Read Word)

READ_VIN_MIN is a manufacturer-specific command that reports 10-bit minimum input voltage measured since a power-on reset or the last RESET_MIN (Bit[5] in the PK_MIN_AVG register) made high.

This command uses the PMBus® read word protocol.

Follow the PMBus® DIRECT format conversion using the coefficients in Table 7-65 and Equation 14, to convert the hexadecimal data read from this register into a real-world value in V.

Table 7-27. READ_VIN_MIN Register Description

Bit	Name	Description	Minimum Value	Maximum Value	Access
15:0	READ_VIN_MIN	Value measured for minimum input voltage since reset or last clear	0x0000 (0V)	0x03FF (87.75V)	Read

7.3.14.7.1.34 READ_VIN_PEAK (D2h, Read Word)

READ_VIN_PEAK is a manufacturer-specific command that reports 10-bit maximum input voltage measured since a power-on reset or the last RESET_PEAK (Bit[7] in the PK_MIN_AVG register) command issued.

This command uses the PMBus® read word protocol.

Follow the PMBus® DIRECT format conversion using the coefficients in Table 7-65 and Equation 14, to convert the hexadecimal data read from this register into a real-world value in V.

Table 7-28. READ_VIN_PEAK Register Description

Bit	Name	Description	Minimum Value	Maximum Value	Access
15:0	READ_VIN_PEAK	Value measured for maximum input voltage since reset or last clear	0x0000 (0V)	0x03FF (87.75V)	Read

7.3.14.7.1.35 READ_VOUT_AVG (DDh, Read Word)

READ_VOUT_AVG is a manufacturer-specific command that reports 10-bit average values of output voltage telemetry. Data are updated with each data cycle, reducing averaged telemetry read latency. Average count can be programmed through PMBus® using Bit[2:0] in the PK_MIN_AVG register. The contents of READ_VOUT_AVG register can be reset to zero (0x0000h) by setting Bit[6] in the PK_MIN_AVG register high.

This command uses the PMBus® read word protocol.

Follow the PMBus® DIRECT format conversion using the coefficients in Table 7-65 and Equation 14, to convert the hexadecimal data read from this register into a real-world value in V.

Copyright © 2026 Texas Instruments Incorporated

Table 7-29. READ_VOUT_AVG Register Description

Bit	Name	Description	Minimum Value	Maximum Value	Access
15:0	READ_VOUT_AVG	Value measured for average output voltage	0x0000 (0V)	0x03FF (87.75V)	Read

7.3.14.7.1.36 READ_VOUT_MIN (DAh, Read Word)

READ_VOUT_MIN is a manufacturer-specific command that reports 10-bit minimum output voltage measured since a power-on reset or the last RESET_MIN (Bit[5] in the PK_MIN_AVG register) made high.

This command uses the PMBus® read word protocol.

Follow the PMBus® DIRECT format conversion using the coefficients in Table 7-65 and Equation 14, to convert the hexadecimal data read from this register into a real-world value in V.

Table 7-30. READ_VOUT_MIN Register Description

Bit	Name	Description	Minimum Value	Maximum Value	Access
15:0	READ_VOUT_MIN	Value measured for minimum output voltage since reset or last clear	0x0000 (0V)	0x03FF (87.75V)	Read

7.3.14.7.1.37 READ_IIN_AVG (DEh, Read Word)

READ_IIN_AVG is a manufacturer-specific command that reports 10-bit average values of input current telemetry. Data are updated with each data cycle, reducing averaged telemetry read latency. Average count can be programmed through PMBus® using Bit[2:0] in the PK_MIN_AVG register. The contents of READ_IIN_AVG register can be reset to zero (0x0000h) by setting Bit[6] in the PK_MIN_AVG register to high.

This command uses the PMBus® read word protocol.

Follow the PMBus® DIRECT format conversion using the coefficients in Table 7-65 and Equation 14, to convert the hexadecimal data read from this register into a real-world value in A.

Table 7-31. READ_IIN_AVG Register Description

Bit	Name	Description	Minimum Value	Maximum Value	Access
15:0	READ_IIN_AVG	Value measured for average input current	0x0000 (0A)	0x03FF (107142/R_{IMON} A)	Read

7.3.14.7.1.38 READ_IIN_PEAK (D4h, Read Word)

READ_IIN_PEAK is a manufacturer-specific command that reports 10-bit maximum input current measured since a power-on reset or the last RESET_PEAK (Bit[7] in the PK_MIN_AVG register) made high.

This command uses the PMBus® read word protocol.

Follow the PMBus® DIRECT format conversion using the coefficients in Table 7-65 and Equation 14, to convert the hexadecimal data read from this register into a real-world value in A.

Table 7-32. READ_IIN_PEAK Register Description

Bit	Name	Description	Minimum Value	Maximum Value	Access
15:0	READ_IIN_PEAK	Value measured for maximum input current since reset or last clear	0x0000 (0A)	0x03FF (107142/R_{IMON} A)	Read

Copyright © 2026 Texas Instruments Incorporated

7.3.14.7.1.39 READ_TEMP_AVG (D6h, Read Word)

The READ_TEMP_AVG command is a manufacturer-specific command that reports 10-bit average values of device temperature or auxiliary input voltage telemetry based on the state of Bit[7] in the ADC_CONFIG_2 register. If this bit is set high, the READ_TEMP_AVG command reports average values of auxiliary input voltage telemetry, otherwise average values of device temperature telemetry. Default state of Bit[7] in the ADC_CONFIG_2 register is low. Data are updated with each data cycle, reducing averaged telemetry read latency. Average count can be programmed through PMBus® using Bit[2:0] in the PK_MIN_AVG register. The contents of READ_TEMP_AVG register can be reset to zero (0x0000h) by setting Bit[6] in the PK_MIN_AVG register high.

This command uses the PMBus® read word protocol.

Follow the PMBus® DIRECT format conversion using the coefficients in Table 7-65 and Equation 14, to convert the hexadecimal data read from this register into a real-world value in °C or V.

Table 7-33. READ_TEMP_AVG Register Description

Bit	Bit[7] in the ADC_CONFIG_2 register	Name	Description	Minimum Value	Maximum Value	Access
15:0	1	READ_VAUX_AVG	Value measured for average auxiliary input voltage	0x0000 (0V)	0x03FF (1.95V)	Read
	0	READ_TEMP_AVG	Value measured for average device temperature	0x0000 (-229°C)	0x03FF (501°C)	

Make sure to use the DIRECT format calculation coefficients correctly based on the state of Bit[7] in the ADC_CONFIG_2 register.

7.3.14.7.1.40 READ_TEMP_PEAK (D7h, Read Word)

READ_TEMP_PEAK is a manufacturer-specific command that reports 10-bit maximum device temperature measured since a power-on reset or the last RESET_PEAK (Bit[7] in the PK_MIN_AVG register) made high.

This command uses the PMBus® read word protocol.

Follow the PMBus® DIRECT format conversion using the coefficients in Table 7-65 and Equation 14, to convert the hexadecimal data read from this register into a real-world value in °C.

Table 7-34. READ_TEMP_PEAK Register Description

Bit	Name	Description	Minimum Value	Maximum Value	Access
15:0	READ_TEMP_PEAK	Value measured for maximum device temperature since reset or last clear	0x0000 (-229°C)	0x03FF (501°C)	Read

7.3.14.7.1.41 READ_PIN_AVG (DFh, Read Word)

READ_PIN_AVG is a manufacturer-specific command that reports 10-bit average values of input power telemetry. Data are updated with each data cycle, reducing averaged telemetry read latency. Average count can be programmed through PMBus® using Bit[2:0] in the PK_MIN_AVG register. The contents of this register can be reset to zero (0x0000h) by setting Bit[6] in the PK_MIN_AVG register high.

This command uses the PMBus® read word protocol.

Follow the PMBus® DIRECT format conversion using the coefficients in Table 7-65 and Equation 14, to convert the hexadecimal data read from this register into a real-world value in W.

Table 7-35. READ_PIN_AVG Register Description

Bit	Name	Description	Minimum Value	Maximum Value	Access
15:0	READ_PIN_AVG	Value measured for average input power	0x0000 (0W)	0x03FF (9401785/R_{IMON} W)	Read

7.3.14.7.1.42 READ_PIN_PEAK (D5h, Read Word)

READ_PIN_PEAK is a manufacturer-specific command that reports 10-bit maximum input power measured since a power-on reset or the last RESET_PEAK (Bit[7] in the PK_MIN_AVG register) made high.

This command uses the PMBus® read word protocol.

Follow the PMBus® DIRECT format conversion using the coefficients in Table 7-65 and Equation 14, to convert the hexadecimal data read from this register into a real-world value in W.

Table 7-36. READ_PIN_PEAK Register Description

Bit	Name	Description	Minimum Value	Maximum Value	Access
15:0	READ_PIN_PEAK	Value measured for maximum input power since reset or last clear	0x0000 (0W)	0x03FF (9401785/R_{IMON} W)	Read

7.3.14.7.1.43 READ_SAMPLE_BUF (D8h, Block Read)

READ_SAMPLE_BUF is a manufacturer-specific command used to read the latest sixty-four (64) samples of a particular parameter from a round-robin ADC buffer available in the device RAM. This allows multiple ADC samples to be captured at a higher speed and readout at on go without the bottleneck of reading individual samples sequentially over the PMBus® serial interface. This allows the system designer to reconstruct the time domain profile/waveform of that parameter in a given time interval. This can be useful during design or system debugging by functioning like an in-built "digital oscilloscope". The rate at which ADC samples are updated in the buffer depends on the effective ADC sampling period and the decimation rate/sample skip count. If Bit[3] of the DEVICE_CONFIG register is set to high, the effective ADC sampling period is 18µs (typical). Otherwise, it is 11µs (typical) by default. The ADC channel to sample for buffering and the decimation rate/sample skip count is configurable through the ADC_CONFIG_2 register. By selecting different decimation rates, users can select between “fine time resolution with short aperture” and “coarse time resolution with wide aperture”.

This command uses the PMBus® block read protocol with a block size of sixty-four (64).

Follow the PMBus® DIRECT format conversion using the coefficients in Table 7-65 and Equation 14, to convert the hexadecimal data bytes into the real-world values in the appropriate unit.

The ADC sample buffer starts buffering as soon as the device powers up. The buffering is paused under two different conditions:

1. The instant READ_SAMPLE_BUF command is issued. This verifies the sample buffer is not overwritten with new values while the host is reading out the previous set of values. After sixty-four (64) bytes have been read, it again starts buffering new samples.
2. In the event of a fault, which is latched internally as shown in Table 7-2. This verifies the snapshot of the samples before the fault event is preserved even if there is a delay from host in reading out the sample buffer. After issuing the CLEAR_FAULTS command, or writing OPERATION OFF command followed by OPERATION ON command, or toggling the EN/UVLO pin, it again starts buffering new samples.

Copyright © 2026 Texas Instruments Incorporated

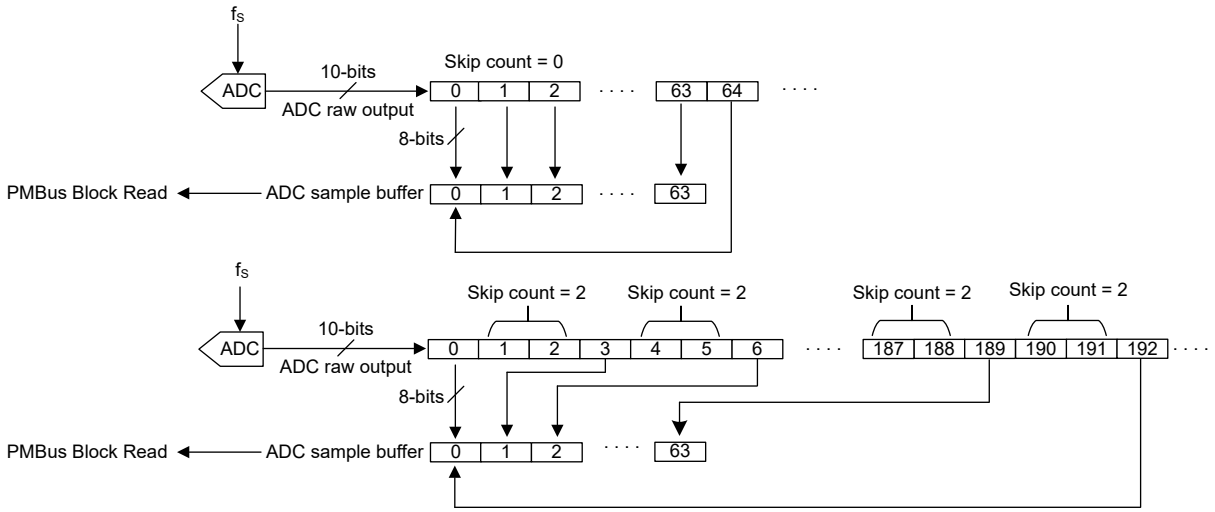

Figure 7-18. ADC Sample Buffering Example

Note

The ADC samples are truncated from 10-bits to 8-bits while filling up the ADC sample buffer. Make sure to use the DIRECT format calculation coefficients correctly.

7.3.14.7.1.44 READ_BB_RAM (FDh, Block Read)

READ_BB_RAM is a manufacturer-specific command used to read the contents of the Blackbox buffer RAM, which is seven (7) bytes deep as described in Section 7.3.14.11.

This command uses the PMBus® block read protocol with a block size of seven (7).

Table 7-37 presents details of the Blackbox RAM registers. There are seven (7) Blackbox RAM registers, starting from BB_RAM_0 to BB_RAM_6. Descriptions of all seven (7) registers (BB_RAM_0 to BB_RAM_6) are identical.

Table 7-37. BB_RAM Register Description

Bit	Name	Value	Description	Default	Access
7:5	EVENT_ID		*Event identifier*	000	Read
		111	VIN_UV_WARN		
		110	VIN_OV_WARN		
		101	OC_WARN		
		100	OT_WARN		
		011	OC_DET		
		010	VOUT_UV_WARN		
		001	IN_OP_WARN		
		000	None		
4	BB_TMR_EXP		*Blackbox timer expiry*	0	
		1	Blackbox timer overflowed at least once since the last event		
		0	Blackbox timer has not overflowed		
3:0	BB_TICK	0000	Blackbox tick timer	0000	

The Blackbox RAM contents get reset under the following events:

- Input power recycle at VIN or VDD pin
- ENABLE recycling
- CLEAR_FAULTS command
- OPERATION OFF command followed by OPERATION ON command
- Initiation of an auto-retry sequence

7.3.14.7.1.45 READ_BB_EEPROM (F4h, Block Read)

READ_BB_EEPROM is a manufacturer-specific command used to read contents stored in the Blackbox shadow registers internal to the TPS1689x eFuse. Before issuing this command, the FETCH_BB_EEPROM command must be sent to load the Blackbox contents from the external EEPROM (Page-0) as described in Section 7.3.14.11 into the Blackbox shadow registers. READ_BB_EEPROM retrieves sixteen (16) bytes of Blackbox information stored in the EEPROM as shown below.

- BB_RAM_0 to BB_RAM_6 [Seven (7) bytes]
- BB_TIMER [One (1) byte]
- STATUS_WORD [Two (2) bytes]
- STATUS_MFR_SPECIFIC [One (1) byte]
- STATUS_INPUT [One (1) byte]
- VIN_PEAK [One (1) byte, Eight (8) MSBs from the 10-bit ADC output data]
- IIN_PEAK [One (1) byte, Eight (8) MSBs from the 10-bit ADC output data]
- TEMPERATURE_PEAK [One (1) byte, Eight (8) MSBs from the 10-bit ADC output data]
- CHECKSUM [One (1) byte]

This command uses the PMBus® block read protocol with a block size of sixteen (16).

VIN_PEAK, IIN_PEAK, and TEMPERATURE_PEAK data use the PMBus® DIRECT format. Use the coefficients in Table 7-65 and Equation 14 to convert the hexadecimal data read from these registers into the real-world value in the appropriate units.

Copyright © 2026 Texas Instruments Incorporated

Note

The peak input voltage, input current, and temperature values are truncated from 10-bits to 8-bits while stored in an external EEPROM. Make sure to use the DIRECT format calculation coefficients correctly.

7.3.14.7.1.46 BB_TIMER (FAh, Read Byte)

BB_TIMER is a manufacturer-specific command used to read the following:

- Blackbox RAM address pointer, indicating which Blackbox RAM has been filled to date. After filling up all seven (7) Blackbox RAM locations, it resets to zero.
- Blackbox timer expiry bit, showing if the Blackbox tick timer has overflowed at least once since the last event. This bit indicates if the Blackbox RAM event entries are relatively recent or old. This bit is latched when the timer overflows and resets to zero along with the free running timer when the next event occurs.
- Blackbox tick timer, a free running timer, which is reset to zero after every event. The timer update rate is configurable through the BB_CONFIG register. This allows users to tradeoff between fine resolution and longer time span depending on the debugging needs.

To access the BB_TIMER register, use the PMBus® read byte protocol. The whole content of this register resets to zero (0) at the instant the CLEAR_FAULTS command is issued. The details of the BB_TIMER register are shown in Table 7-38.

Table 7-38. BB_TIMER Register Description

Bit	Name	Value	Description	Default	Live/Latched	Access
7:5	BB_PTR	000	*BB RAM address pointer* Either all seven (7) Blackbox RAM registers are empty or all are filled up until date	000	Live	Read
		001	BB_RAM_0 filled up until date			
		010	BB_RAM_0 and BB_RAM_1 filled up until date			
		011	BB_RAM_0, BB_RAM_1, and BB_RAM_2 filled up until date			
		100	BB_RAM_0, BB_RAM_1, BB_RAM_2, and BB_RAM_3 filled up until date			
		101	BB_RAM_0, BB_RAM_1, BB_RAM_2, BB_RAM_3, and BB_RAM_4 filled up until date			
		110	BB_RAM_0, BB_RAM_1, BB_RAM_2, BB_RAM_3, BB_RAM_4, and BB_RAM_5 filled up until date			
		111	Reserved			
4	BB_TMR_EXP	1	*Blackbox timer expiry* Blackbox timer overflowed at least once since the last event	0	Latched	
		0	Blackbox timer has not overflowed			
3:0	BB_TICK	Blackbox timer		0000	Live	

Copyright © 2026 Texas Instruments Incorporated

7.3.14.7.1.47 PMBUS_ADDR (FBh, Read/Write Byte)

PMBUS_ADDR is a manufacturer-specific command used for reading and configuring a user-specific device address apart from the addresses mentioned in Table 7-5. The device uses this address for I2C communication instead of the default value (0x40) when ADDR0 and ADDR1 pins are OPEN. This updated device address can be stored in the NVM and the device responds to this revised address upon power up next time.

This command uses the PMBus® read or write byte protocol.

7.3.14.7.1.48 VIN_UV_WARN (58h, Read/Write Word)

VIN_UV_WARN is a standard PMBus® command for configuring or reading an 8-bit threshold for the input undervoltage warning detection. This command uses the PMBus® DIRECT format. When reading and writing to this register, use the coefficients shown in Table 7-65, Equation 14, and Equation 15 to convert between real word units and hexadecimal values. This command uses the PMBus® read or write word protocol.

Contents of this register are compared to the VIN ADC telemetry value. If the measured VIN value falls below the value in this register, the VIN_UV_WARN flags are set in the respective registers. The $\overline{\text{SMBA}}$ signal is asserted. When the input voltage rises above the VIN_UV_WARN threshold, and the CLEAR_FAULTS command is sent afterward, this warning flag and alert clear. VIN_UV_WARN threshold is typically set above than VIN_UV_FLT threshold for proper operation.

Table 7-39. VIN_UV_WARN Register Description

Bit	Name	Description	Minimum Value	Maximum Value	Default Value	Access
15:0	VIN_UV_WARN	Input undervoltage warning threshold	0x0000 (0V)	0x00FF (87.75V)	0x0020h (11V)	Read/Write

When an input undervoltage warning is detected, the device:

- sets the NONE_OF_THE_ABOVE/UNKNOWN bit in the STATUS_BYTE register
- sets the INPUT_STATUS bit in the upper byte of the STATUS_WORD register
- sets the VIN_UV_WARN bit in the STATUS_INPUT register
- fills-up one of the Blackbox RAM registers (if available to write) writing the event identifier as VIN_UV_WARN and relative time stamp information
- increases the Blackbox RAM address pointer in the BB_TIMER register by one (1) if it is previously less than six (6), otherwise resets to zero (0). This change in the address pointer only occurs if one of the Blackbox RAM registers is available to write.
- notifies the host by asserting $\overline{\text{SMBA}}$, if it is not masked setting the STATUS_IN bit in the ALERT_MASK register.

Note

A write command to this register must be preceded by the MFR_WRITE_PROTECT command to unlock the device first to prevent accidental or spurious writes.

7.3.14.7.1.49 VIN_UV_FLT (59h, Read/Write Word)

VIN_UV_FLT is a standard PMBus® command for configuring or reading an 8-bit threshold for the input undervoltage fault detection. This command uses the PMBus® DIRECT format. When reading and writing to this register, use the coefficients shown in Table 7-65, Equation 14, and Equation 15 to convert between the real world units and hexadecimal values.

This command uses the PMBus® read or write word protocol.

Contents of this register are compared to the VIN ADC telemetry value. Once the input voltage has fallen below the undervoltage fault threshold, the output is turned off, and the VIN_UV_FLT flags are set in the respective registers. The $\overline{\text{SMBA}}$ signal is asserted. 700mV (typical) of hysteresis is added to the value in this register. This is to provide the rising threshold the input voltage must rise above for this fault to clear. Once the input voltage

Copyright © 2026 Texas Instruments Incorporated

rises above the rising threshold, the output is turned back on. However, the fault flags and alerts remain until cleared by the host by sending the CLEAR_FAULTS command.

Table 7-40. VIN_UV_FLT Register Description

Bit	Name	Description	Minimum Value	Maximum Value	Default Value	Access
15:0	VIN_UV_FLT	Input undervoltage fault threshold	0x0000 (0V)	0x00FF (87.75V)	0x001Fh (10.66V)	Read/Write

When an input undervoltage fault is detected, the device:

- sets the FET_OFF, VIN_UV_FLT, and NONE_OF_THE_ABOVE/UNKNOWN bits in the STATUS_BYTE register
- sets the OUT_STATUS, INPUT_STATUS, PGOODB, and NONE_OF_THE_ABOVE/UNKNOWN bits in the upper byte of the STATUS_WORD register
- sets the VOUT_UV_WARN bit in the STATUS_OUT register
- sets the VIN_UV_FLT bit in the STATUS_INPUT register
- sets the PGOODB bit in the STATUS_MFR_SPECIFIC_2 register
- notifies the host by asserting $\overline{\text{SMBA}}$, if it is not masked setting the STATUS_IN, PGOODB, and STATUS_OUT bits in the ALERT_MASK register.
- deasserts the external PGOOD signal.

Note

A write command to this register must be preceded by the MFR_WRITE_PROTECT command to unlock the device first to prevent accidental or spurious writes.

7.3.14.7.1.50 VIN_OV_WARN (57h, Read/Write Word)

VIN_OV_WARN is a standard PMBus® command for configuring or reading an 8-bit threshold for the input overvoltage warning detection. This command uses the PMBus® DIRECT format. When reading and writing to this register, use the coefficients shown in Table 7-65, Equation 14, and Equation 15 to convert between the real world units and hexadecimal values.

This command uses the PMBus® read or write word protocol.

Contents of this register are compared to the VIN ADC telemetry value. If the measured VIN value rises above the value in this register, the VIN_OV_WARN flags are set in the respective registers. The $\overline{\text{SMBA}}$ signal is asserted. When the input voltage falls below the VIN_OV_WARN threshold, and the CLEAR_FAULTS command is sent afterwards, this warning flag and alert are cleared. VIN_OV_WARN threshold is typically set lower than VIN_OV_FLT threshold for proper operation.

Table 7-41. VIN_OV_WARN Register Description

Bit	Name	Description	Minimum Value	Maximum Value	Default Value	Access
15:0	VIN_OV_WARN	Input overvoltage warning threshold	0x0000 (0V)	0x00FF (87.75V)	0x00A4h (56.43V)	Read/Write

When an input overvoltage warning is detected, the device:

- sets the NONE_OF_THE_ABOVE/UNKNOWN bit in the STATUS_BYTE register
- sets the INPUT_STATUS bit in the upper byte of the STATUS_WORD register
- sets the VIN_OV_WARN bit in the STATUS_INPUT register
- fills-up one of the Blackbox RAM registers (if available to write) writing the event identifier as VIN_OV_WARN and relative time stamp information
- increases the Blackbox RAM address pointer in the BB_TIMER register by one (1) if it was previously less than six (6), otherwise resets to zero (0). This change in the address pointer only occurs if one of the Blackbox RAM registers is available to write.

Copyright © 2026 Texas Instruments Incorporated

- notifies the host by asserting $\overline{\text{SMBA}}$, if it is not masked setting the STATUS_IN bit in the ALERT_MASK register.

Note

A write command to this register should be preceded by the MFR_WRITE_PROTECT command to unlock the device first to prevent accidental accidental/spurious writes.

7.3.14.7.1.51 VIN_OV_FLT (55h, Read/Write Word)

VIN_OV_FLT is a standard PMBus® command for configuring or reading a 4-bit threshold for the input overvoltage fault detection. This command uses the PMBus® DIRECT format. When reading and writing to this register, use the coefficients shown in Table 7-65, Equation 14, and Equation 15 to convert between the real world units and hexadecimal values.

This command uses the PMBus® read or write word protocol.

Contents of this register drive a DAC to set the thresholds for a comparator monitoring the input voltage. Once the input voltage exceeds the overvoltage fault rising threshold, the output is turned off, and the VIN_OV_FLT flags are set in the respective registers. The $\overline{\text{SMBA}}$ signal is asserted. 3V (typical) of hysteresis is subtracted from the value in this register. This is to provide the falling threshold the input voltage must fall below for this fault to clear. Once the input voltage falls below the falling threshold, the output is turned back on. However, the fault flags and alerts remain until cleared by the host by sending the CLEAR_FAULTS command.

Table 7-42. VIN_OV_FLT Register Description

Bit	Name	Description	Value	Default Value	Access
7:6	OV_RANGE_SEL	Over-voltage range selection	00 : 16 to 32V	10	Read/Write
			01 : 32 to 48V		
			10 : 48 to 64V		
			11 : 64 to 80V		
5:0	VOV	Over-voltage set-point	0V (0x00h) to 15.75V (0x3Fh)	0x2F	

When an input overvoltage fault is detected, the device:

- Sets the FET_OFF and NONE_OF_THE_ABOVE/UNKNOWN bits in the STATUS_BYTE register
- Sets the OUT_STATUS, INPUT_STATUS, PGOODB and NONE_OF_THE_ABOVE/UNKNOWN bits in the upper byte of the STATUS_WORD register
- Sets the VOUT_UV_WARN bit in the STATUS_OUT register
- Sets the VIN_OV_FLT bit in the STATUS_INPUT register
- Sets the PGOODB bit in the STATUS_MFR_SPECIFIC_2 register
- Notifies the host by asserting $\overline{\text{SMBA}}$, if it is not masked setting the STATUS_IN, PGOODB, and STATUS_OUT bits in the ALERT_MASK register.
- Deasserts the external PG signal.

Note

A write command to this register must be preceded by the MFR_WRITE_PROTECT command to unlock the device first to prevent accidental or spurious writes.

7.3.14.7.1.52 VOUT_UV_WARN (43h, Read/Write Word)

VOUT_UV_WARN is a standard PMBus® command for configuring or reading an 8-bit threshold for the output undervoltage warning detection. This command uses the PMBus® DIRECT format. When reading and writing to this register, use the coefficients shown in Table 7-65, Equation 14, and Equation 15 to convert between the real world units and hexadecimal values.

Copyright © 2026 Texas Instruments Incorporated

This command uses the PMBus® read or write word protocol.

Contents of this register are compared to the VOUT ADC telemetry value. If the measured VOUT value falls below the value in this register, the VOUT_UV_WARN flags are set in the respective registers. The $\overline{\text{SMBA}}$ signal is asserted. When the output voltage rises above the VOUT_UV_WARN threshold, and the CLEAR_FAULTS command is sent afterwards, this warning flag and alert clear.

Table 7-43. VOUT_UV_WARN Register Description

Bit	Name	Description	Minimum Value	Maximum Value	Default Value	Access
15:0	VOUT_UV_WARN	Output undervoltage warning threshold	0x0000h (0V)	0x00FFh (87.75V)	0x0020h (11V)	Read/Write

When an output undervoltage warning is detected, the device:

- sets the NONE_OF_THE_ABOVE/UNKNOWN bit in the STATUS_BYTE register
- sets the OUT_STATUS bit in the upper byte of the STATUS_WORD register
- sets the VOUT_OV_WARN bit in the STATUS_OUT register
- notifies the host by asserting $\overline{\text{SMBA}}$, if it is not masked setting the STATUS_OUT bit in the ALERT_MASK register.

Note

A write command to this register must be preceded by the MFR_WRITE_PROTECT command to unlock the device first to prevent accidental or spurious writes.

7.3.14.7.1.53 VOUT_PGTH (5Fh, Read/Write Word)

VOUT_PGTH is a standard PMBus® command for setting or reading an 8-bit output voltage threshold at which Power Good (PGOOD) is be de-asserted. This command uses the PMBus® DIRECT format. When reading and writing to this register, use the coefficients shown in Table 7-65, Equation 14, and Equation 15 to convert between the real world units and hexadecimal values.

This command uses the PMBus® read or write word protocol.

Contents of this register are compared to the VOUT ADC telemetry value. Once the output voltage has fallen below the VOUT_PGTH threshold at any point of time during normal operation or the device detects a fault (except short-circuit), the PGOOD is de-asserted, and the PGOODB flags are set in the respective registers. The $\overline{\text{SMBA}}$ signal is also asserted. 250mV (typical) of hysteresis is added to the value in this register. In order for the PGOOD to be asserted again, the output voltage must rise above this rising threshold after clearing all underlying faults and enabling the FET internal to the device. However, the fault flags and alerts remain until cleared by the host by sending the CLEAR_FAULTS command.

Table 7-44. VOUT_PGTH Register Description

Bit	Name	Description	Minimum Value	Maximum Value	Default Value	Access
15:0	VOUT_PGTH	Output power good de-assertion threshold	0x0000h (0V)	0x00FFh (87.75V)	0x001Dh (9.97V)	Read/Write

When the output voltage is less than VOUT_PGTH threshold, the device:

- sets the NONE_OF_THE_ABOVE/UNKNOWN bit in the STATUS_BYTE register
- sets the PGOODB and NONE_OF_THE_ABOVE/UNKNOWN bits in the upper byte of the STATUS_WORD register
- sets the PGOODB bit in the STATUS_MFR_SPECIFIC_2 register
- notifies the host by asserting $\overline{\text{SMBA}}$, if it is not masked setting the PGOODB bit in the ALERT_MASK register.

Copyright © 2026 Texas Instruments Incorporated

Note

A write command to this register should be preceded by the MFR_WRITE_PROTECT command to unlock the device first to prevent accidental accidental/spurious writes.

7.3.14.7.1.54 OT_WARN (51h, Read/Write Word)

OT_WARN is a standard PMBus® command for configuring or reading an 8-bit threshold for the device overtemperature warning detection. This command uses the PMBus® DIRECT format. When reading and writing to this register, use the coefficients shown in Table 7-65, Equation 14, and Equation 15 to convert between the real world units and hexadecimal values.

This command uses the PMBus® read or write word protocol.

Contents of this register are compared to the VTEMP ADC telemetry value. If the device temperature rises above the value in this register, the OT_WARN flags are set in the respective registers. The $\overline{\text{SMBA}}$ signal is asserted. When the device temperature falls below the OT_WARN threshold, and the CLEAR_FAULTS command is sent afterward, this warning flag and alert clear.

Table 7-45. OT_WARN Register Description

Bit	Name	Description	Minimum Value	Maximum Value	Default Value	Access
15:0	OT_WARN	Device overtemperature warning threshold	0x0000h (-229 ºC)	0x00FFh (501.4 ºC)	0x007Ch (126 ºC)	Read/Write

When an overtemperature warning is detected, the device:

- sets the STATUS_TEMP bit in the STATUS_BYTE register
- sets the OT_WARN bit in the STATUS_TEMP register
- fills-up one of the Blackbox RAM registers (if available to write) writing the event identifier as OT_WARN and relative time stamp information
- increases the Blackbox RAM address pointer in the BB_TIMER register by one (1) if it is previously less than six (6), otherwise resets to zero (0). This change in the address pointer only occurs if one of the Blackbox RAM registers is available to write
- notifies the host by asserting $\overline{\text{SMBA}}$, if it is not masked setting the STATUS_TEMP bit in the ALERT_MASK register.

Note

A write command to this register must be preceded by the MFR_WRITE_PROTECT command to unlock the device first to prevent accidental or spurious writes.

7.3.14.7.1.55 OT_FLT (4Fh, Read/Write Word)

OT_FLT is a standard PMBus® command for configuring or reading an 8-bit threshold for the device overtemperature fault detection. This command uses the PMBus® DIRECT format. When reading and writing to this register, use the coefficients shown in Table 7-65, Equation 14, and Equation 15 to convert between the real world units and hexadecimal values.

This command uses the PMBus® read or write word protocol.

Contents of this register are compared to the VTEMP ADC telemetry value. Once the device temperature exceeds the overtemperature fault threshold, the output is turned off, and the OT_FLT flags are set in the respective registers. The $\overline{\text{SMBA}}$ signal is asserted. Refer to Section 7.3.6 for more details on thermal shutdown. After the device recovers from an overtemperature fault, the CLEAR_FAULTS command clears the OT_FLT flag and alert.

Table 7-46. OT_FLT Register Description

Bit	Name	Description	Minimum Value	Maximum Value	Default Value	Access
15:0	OT_WARN	Device overtemperature fault threshold	0x0000h (-229 ºC)	0x00FFh (501.4 ºC)	0x0084h (149 ºC)	Read/Write

When an overtemperature fault is detected, the device:

- sets the FET_OFF, STATUS_TEMP, and NONE_OF_THE_ABOVE/UNKNOWN bits in the STATUS_BYTE register
- sets the OUT_STATUS, PGOODB, and NONE_OF_THE_ABOVE/UNKNOWN bits in the upper byte of the STATUS_WORD register
- sets the VOUT_UV_WARN bit in the STATUS_OUT register
- sets the OT_FLT bit in the STATUS_TEMP register
- sets the PGOODB bit in the STATUS_MFR_SPECIFIC_2 register
- notifies the host asserting $\overline{\text{SMBA}}$, if it is not masked setting the STATUS_TEMP, PGOODB, and STATUS_OUT bits high in the ALERT_MASK register.
- deasserts the external PGOOD signal.
- asserts the $\overline{\text{FLT}}$ signal, if it is not masked setting the TEMP_FLT bit high in the FAULT_MASK register.

Note

A write command to this register should be preceded by the MFR_WRITE_PROTECT command to unlock the device first to prevent accidental accidental/spurious writes.

7.3.14.7.1.56 PIN_OP_WARN (6Bh, Read/Write Word)

PIN_OP_WARN is a standard PMBus® command for configuring or reading an 8-bit threshold for the input overpower warning detection. This command uses the PMBus® DIRECT format. When reading and writing to this register, use the coefficients shown in Table 7-65, Equation 14, and Equation 15 to convert between the real world units and hexadecimal values.

This command uses the PMBus® read or write word protocol.

Contents of this register are compared to the calculated telemetry power value. If the input power rises above the value in this register, the PIN_OP_WARN flags are set in the respective registers. The $\overline{\text{SMBA}}$ signal is asserted. When the input power falls below the PIN_OP_WARN threshold, and the CLEAR_FAULTS command is sent afterwards, this warning flag and alert clear.

Table 7-47. PIN_OP_WARN Register Description

Bit	Name	Description	Minimum Value	Maximum Value	Default Value	Access
15:0	PIN_OP_WARN	Input overpower warning threshold	0x0000h (0W)	0x00FFh (2089230/R_{IMON} W)	0x0055h (696410/ R_{IMON} W)	Read/Write

When an input overpower warning is detected, the device:

- sets the NONE_OF_THE_ABOVE/UNKNOWN bit in the STATUS_BYTE register
- sets the INPUT_STATUS and NONE_OF_THE_ABOVE/UNKNOWN bits in the upper byte of the STATUS_WORD register
- sets the IN_OP_WARN bit in the STATUS_INPUT register
- may set the EIN_OF_WARN bit in the STATUS_MFR_SPECIFIC_2 register
- fills-up one of the Blackbox RAM registers (if available to write) writing the event identifier as IN_OP_WARN and relative time stamp information

Copyright © 2026 Texas Instruments Incorporated

- increments the Blackbox RAM address pointer in the BB_TIMER register by one (1) if it is previously less than six (6), otherwise resets to zero (0). This change in the address pointer only occurs if one of the Blackbox RAM registers is available to write.
- notifies the host by asserting $\overline{\text{SMBA}}$, if it is not masked setting the STATUS_IN bit in the ALERT_MASK register.

Note

A write command to this register must be preceded by the MFR_WRITE_PROTECT command to unlock the device first to prevent accidental or spurious writes.

7.3.14.7.1.57 IIN_OC_WARN (5Dh, Read/Write Word)

IIN_OC_WARN is a standard PMBus® command for configuring or reading an 8-bit threshold for the input overcurrent warning detection. This command uses the PMBus® DIRECT format. When reading and writing to this register, use the coefficients shown in Table 7-65, Equation 14, and Equation 15 to convert between the real world units and hexadecimal values.

This command uses the PMBus® read or write word protocol.

Contents of this register are compared to the VIMON ADC telemetry value. If the input current rises above the value in this register, the IIN_OC_WARN flags are set in the respective registers. The $\overline{\text{SMBA}}$ signal is asserted. When the input current falls below the IIN_OC_WARN threshold, and the CLEAR_FAULTS command is sent afterward, this warning flag and alert clear.

Table 7-48. IIN_OC_WARN Register Description

Bit	Name	Description	Minimum Value	Maximum Value	Default Value	Access
15:0	IIN_OC_WARN	Input overcurrent warning threshold	0x0000h (0A)	0x00FFh (107250/ R_{IMON} A)	0x007Fh (53415/ R_{IMON} A)	Read/Write

When an input overcurrent warning is detected, the device:

- sets the NONE_OF_THE_ABOVE/UNKNOWN bit in the STATUS_BYTE register
- sets the INPUT_STATUS bit in the upper byte of the STATUS_WORD register
- sets the OC_WARN bit in the STATUS_INPUT register
- may set the EIN_OF_WARN bit in the STATUS_MFR_SPECIFIC_2 register
- fills-up one of the Blackbox RAM registers (if available to write) writing the event identifier as OC_WARN and relative time stamp information
- increments the Blackbox RAM address pointer in the BB_TIMER register by one (1) if it is previously less than six (6), otherwise resets to zero (0). This change in the address pointer only occurs if one of the Blackbox RAM registers is available to write.
- notifies the host by asserting $\overline{\text{SMBA}}$, if it is not masked setting the STATUS_IN bit high in the ALERT_MASK register.

Note

A write command to this register must be preceded by the MFR_WRITE_PROTECT command to unlock the device first to prevent accidental or spurious writes.

7.3.14.7.1.58 ALERT_MASK (DBh, Read/Write Word)

ALERT_MASK is a manufacturer-specific command for configuring or reading the events which are allowed to assert the $\overline{\text{SMBA}}$ signal.

This command uses the PMBus® read or write word protocol.

Each bit corresponds to one of the analog or digital faults or warnings that would normally result in $\overline{\text{SMBA}}$ being asserted. When the corresponding bit is high, that condition does not cause $\overline{\text{SMBA}}$ to be asserted. If

that condition occurs, the registers where that condition is captured are still updated (STATUS registers and Blackbox) and the device ON or OFF control is still active. The details of this register are shown in Table 7-49.

Table 7-49. ALERT_MASK Register Description

Bit	Name	Value	Description	Default	Access
15:9	Reserved	0000000	Reserved	0000000	Read/Write
8	UNKNOWN	1	UNKNOWN status bit does not assert $\overline{\text{SMBA}}$	1	
		0	UNKNOWN status bit asserts $\overline{\text{SMBA}}$		
7	PGOODB	1	PGOOD falling does not assert $\overline{\text{SMBA}}$	0	
		0	PGOOD falling asserts $\overline{\text{SMBA}}$		
6	GLBL_FLT	1	GLBL_FLT does not assert $\overline{\text{SMBA}}$	0	
		0	GLBL_FLT asserts $\overline{\text{SMBA}}$		
5	MFR_STATUS	1	Active bits set in STATUS_MFR_SPECIFIC register do not assert $\overline{\text{SMBA}}$	0	
		0	Active bits set in STATUS_MFR_SPECIFIC register assert $\overline{\text{SMBA}}$		
4	STATUS_TEMP	1	Active bits set in STATUS_TEMP register do not assert $\overline{\text{SMBA}}$	0	
		0	Active bits set in STATUS_TEMP register assert $\overline{\text{SMBA}}$		
3	STATUS_OUT	1	Active bits set in STATUS_OUT register do not assert $\overline{\text{SMBA}}$	0	
		0	Active bits set in STATUS_OUT register assert $\overline{\text{SMBA}}$		
2	STATUS_IN	1	Active bits set in STATUS_INPUT register do not assert $\overline{\text{SMBA}}$	0	
		0	Active bits set in STATUS_INPUT register assert $\overline{\text{SMBA}}$		
1	CML_ERR	1	Active bits set in STATUS_CML register do not assert $\overline{\text{SMBA}}$	0	
		0	Active bits set in STATUS_CML register assert $\overline{\text{SMBA}}$		
0	STATUS_IOUT	1	Active bits set in STATUS_IOUT register do not assert $\overline{\text{SMBA}}$	0	
		0	Active bits set in STATUS_IOUT register assert $\overline{\text{SMBA}}$		

Note

- A write command to this register must be preceded by the MFR_WRITE_PROTECT command to unlock the device first to prevent accidental or spurious writes.
- GLBL_FLT is a logical OR of the status bits unmasked using the FAULT_MASK register.

Copyright © 2026 Texas Instruments Incorporated

7.3.14.7.1.59 VIREF (E0h, Read/Write Byte)

VIREF is a manufacturer-specific command for configuring or reading a 6-bit reference threshold for overcurrent and short-circuit protections and active current sharing blocks as described in Section 7.3.4.2, Section 7.3.4.3, and Section 7.3.4.4. This command uses the PMBus® DIRECT format. When reading and writing to this register, use the coefficients shown in Table 7-65, Equation 14, and Equation 15 to convert between the real world units and hexadecimal values.

This command uses the PMBus® read or write byte protocol.

Contents of this register drive a DAC to set the threshold for different comparators monitoring the input current. The details of this register are shown in Table 7-50.

Table 7-50. VIREF Register Description

Bit	Name	Description	Minimum Value	Maximum Value	Default Value	Access
7:0	VIREF	Programmable reference voltage for overcurrent and short-circuit protections and active current sharing blocks	0x00h (0.3V)	0x3Fh (1.186V)	0x32h (1V)	Read/Write

Note

A write command to this register must be preceded by the MFR_WRITE_PROTECT command to unlock the device first to prevent accidental or spurious writes.

7.3.14.7.1.60 AUX/TEMP/EEDATA/EECLK/GPIOx (E1h, Read/Write Byte)

AUX/TEMP/EEDATA/EECLK/GPIOx is a manufacturer-specific command for configuring or reading the functions of AUX/EEDATA/ GPIO2 and TEMP/EECLK/ GPIO1 pins.

This command uses the PMBus® read or write word protocol.

Table 7-51. AUX/TEMP/EEDATA/EECLK/GPIOx Description

Bit	Name	Value	Description	Default	Access	Live/Latched
7:5	TEMP/EECLK/ GPIO1 selection	111	TEMP/EECLK/ GPIO1 Functionality CONVST input for ADC	000	R/W	N/A
		110	Reserved			
		101	EECLK			
		100	Reserved			
		011	OC Warning			
		010	General Purpose Logic Output			
		001	General Purpose Logic Input			
		000	TEMP			

Table 7-51. AUX/TEMP/EEDATA/EECLK/GPIOx Description (continued)

Bit	Name	Value	Description	Default	Access	Live/Latched
4	GPIO1 configuration		GPIO1 Pin State when configured as General Purpose Input/Output	0	R/W	Live
		1	Pin Set to HI			
		0	Pin Set to LO			
3:1	AUX/EEDATA/ GPIO2 selection		AUX/EEDATA/ GPIO2 Functionality	000	R/W	N/A
		111	Reserved			
		110	EEDATA			
		101	Reserved			
		100	Reserved			
		011	UV Warning			
		010	General Purpose Logic Output			
		001	General Purpose Logic Input			
		000	AUX			
0	GPIO2 configuration		GPIO2 Pin State when configured as General Purpose Input/Output	0	R/W	Live
		1	Pin Set to HI			
		0	Pin Set to LO			

7.3.14.7.1.61 SMBA_FLT_CONFIG (E2h, Read/Write Byte)

SMBA_FLT_CONFIG is a manufacturer-specific command for configuring or reading the function of $\overline{\text{SMBA}}$_$\overline{\text{FLT}}$ pin.

This command uses the PMBus® read or write word protocol.

Table 7-52. SMBA_FLT_CONFIG Description

Bit	Name	Value	Description	Default	Access	Live/Latched
7:1	Reserved	0000000	Reserved	0000000	R/W	N/A
0	$\overline{\text{SMBA}}$/$\overline{\text{FLT}}$ selection		Pin Selection	0	R/W	N/A
		1	Pin Set to FLTb			
		0	Pin Set to SMBA			

Copyright © 2026 Texas Instruments Incorporated

7.3.14.7.1.62 FAULT_MASK (E3h, Read/Write Word)

FAULT_MASK is a manufacturer-specific command for configuring or reading the events to govern the global fault (GLBL_FLT) bit in asserting $\overline{\text{SMBA}}$ as described in the ALERT_MASK register and causing the external $\overline{\text{FLT}}$ signal to be asserted.

This command uses the PMBus® read or write word protocol.

The details of this register are shown in Table 7-53.

Table 7-53. FAULT_MASK Register Description

Bit	Name	Value	Description	Default	Access
15:11	Reserved	00000	Reserved	00000	Read/Write
10	EXT_FLT	1	EXT_FLT doesn't assert $\overline{\text{FLT}}$	0	
		0	EXT _FLT asserts $\overline{\text{FLT}}$		
9:8	Reserved	0	Reserved	0	
7	FET_HEALTH	1	FET_HEALTH doesn't assert $\overline{\text{FLT}}$	0	
		0	FET_HEALTH asserts $\overline{\text{FLT}}$		
6	SPFAIL	1	SPFAIL doesn't assert $\overline{\text{FLT}}$	0	
		0	SPFAIL asserts $\overline{\text{FLT}}$		
5	SOA_FLT	1	SOA_FLT doesn't assert $\overline{\text{FLT}}$	0	
		0	SOA_FLT asserts $\overline{\text{FLT}}$		
4:3	Reserved	00	Reserved	00	
2	TEMP_FLT	1	TEMP_FLT doesn't assert $\overline{\text{FLT}}$	0	
		0	TEMP_FLT asserts $\overline{\text{FLT}}$		
1	OC_FLT	1	OC_FLT doesn't assert $\overline{\text{FLT}}$	0	
		0	OC_FLT asserts $\overline{\text{FLT}}$		
0	SC_FLT	1	SC_FLT doesn't assert $\overline{\text{FLT}}$	0	
		0	SC_FLT asserts $\overline{\text{FLT}}$		

Note

- A write command to this register should be preceded by the MFR_WRITE_PROTECT command to unlock the device first to prevent accidental accidental/spurious writes.
- This command only allows the user to choose which events will cause assertion of the $\overline{\text{FLT}}$ pin. Masking any event in the FAULT_MASK register doesn't prevent the respective event from turning OFF the device.

7.3.14.7.1.63 DEVICE_CONFIG (E4h, Read/Write Word)

DEVICE_CONFIG is a manufacturer-specific command for configuring or reading several key device setup related information of TPS1689x eFuse.

This command uses the PMBus® read or write word protocol.

The details of this register are shown in Table 7-54.

Table 7-54. DEVICE_CONFIG Register Description

Bit	Name	Value	Description	Default	Access
15	PG_DVDT_DLY	1	*Internal PG delay for discharging DVDT capacitor* 35ms	0	Read/Write
		0	100µs		
14	DIS_VDSFLT	1	*Disable FET drain to source fault detection at start-up* Low drain to source voltage doesn't trigger a fault	0	Read/Write
		0	Low drain to source voltage triggers a fault		
13	SC_RETRY	1	*Retry after short-circuit fault (Fast-trip)* Retry once into current limit (Not a latched fault)	0	Read/Write
		0	Remain off (latched fault)		
12:11	SFT_THR	11	*Scalable fast-trip threshold* 150% of I_{OCP}	10	Read/Write
		10	200% of I_{OCP}		
		01	250% of I_{OCP}		
		00	Reserved		
10:9	DVDT_CONFIG	11	*DVDT current scaling* 150%	10	Read/Write
		10	100%		
		01	50%		
		00	25%		

Copyright © 2026 Texas Instruments Incorporated

Table 7-54. DEVICE_CONFIG Register Description (continued)

Bit	Name	Value	Description	Default	Access
8	Permanent Write Disable	1	Permanant write disable ON. When this bit is stored and restored, device is permanently locked for any writes	0	Read/Write
		0	Permanant write disable OFF		
7	EXT_EEPROM	1	*External EEPROM connection* External EEPROM connected	0	Read/Write
		0	External EEPROM not connected		
6	WARN_De-glitch	1	*De-glitch for UV and OC Warning flags* No de-glitch	0	Read/Write
		0	20ms de-glitch enabled		
5	VOUT_ADC_CLAMP	1	*VOUT ADC output value clamp* Not clamped	0	Read/Write
		0	Clamped to VIN		
4	Reserved	0	Reserved	0	Read/Write
3	ADC_HI_PERF	1	*ADC performance and speed selection* High performance mode (Effective throughput = 18µs)	0	Read/Write
		0	High speed mode (Effective throughput = 11µs)		
2:0	USER_DATA	0	Any revision ID user wants to store	0	Read/Write

Note

A write command to this register should be preceded by the MFR_WRITE_PROTECT command to unlock the device first to prevent accidental accidental/spurious writes.

7.3.14.7.1.64 BB_CONFIG (E4h, Read/Write Byte)

BB_CONFIG is a manufacturer-specific command for configuring or reading the behavior of the Blackbox function as described in Section 7.3.14.11.

This command uses the PMBus® read or write byte protocol.

The details of this register are shown in Table 7-55.

Table 7-55. BB_CONFIG Register Description

Bit	Name	Value	Description	Default	Access
7	FET_OFF_WR	1	*BB EEPROM write trigger* Power FET turning OFF triggers write to BB EEPROM	0	Read/Write
		0	Power FET turning OFF does not trigger write to BB EEPROM		
6	FLT_WR	1	*BB EEPROM write trigger* Global Fault triggers write to BB EEPROM	0	
		0	Global Fault does not trigger write to BB EEPROM		
5	ALERT_WR	1	*BB EEPROM write trigger* $\overline{\text{SMBA}}$ assertion triggers write to BB EEPROM	0	
		0	$\overline{\text{SMBA}}$ assertion does not trigger write to BB EEPROM		
4:2	Reserved	000	Reserved	000	
1:0	BB_TICK	11	*Blackbox timestamp tick interval* 3200µs	00	
		10	800µs		
		01	200µs		
		00	10µs		

Note

A write command to this register must be preceded by the MFR_WRITE_PROTECT command to unlock the device first to prevent accidental accidental/spurious writes. *If the WP# pin is pulled low, the write access is completely disabled in hardware and MFR_WRITE_PROTECT command has no effect.*

BB_CONFIG[5] must be used in conjunction with the ALERT_MASK register to determine which events trigger the Blackbox write to the external EEPROM. However, the GLBL_FLT (ALERT_MASK[6]) signal is excluded from the list of signals driving ALERT for Blackbox write even if they are unmasked in the ALERT_MASK register.

Copyright © 2026 Texas Instruments Incorporated

7.3.14.7.1.65 OC_TIMER (E6h, Read/Write Byte)

OC_TIMER is a manufacturer-specific register used to program the overcurrent blanking digital timer duration as described in Section 7.3.4.2.

This command uses the PMBus® read/write byte protocol.

The details of this register are shown in Table 7-56.

Table 7-56. OC_TIMER Register Description

Bit	Name	Description	Value	Overcurrent Blanking Timer Duration	Default Value	Access
7:0	OC_TIMER	Overcurrent blanking digital timer	0x00h	0	0x14h	Read/Write
			0x01h	160µs		
			0x02h	320µs		
			0x03h	480µs		
			0x04h	640µs		
			0x05h	800µs		
			0x06h	960µs		
			0x07h	1.12ms		
			...			
			0x0Ah	1.6ms		
			...			
			0x14h	3.2ms		
			...			
			0x64h	16ms		
			...			
			0xC9h	32.1ms		
			...			
			0xFFh	40.8ms		

Note

A write command to this register must be preceded by the MFR_WRITE_PROTECT command to unlock the device first to prevent accidental or spurious writes.

7.3.14.7.1.66 RETRY_CONFIG (E7h, Read/Write Byte)

RETRY_CONFIG is a manufacturer-specific command for configuring or reading the retry behavior of the TPS1689x eFuse in the event of a fault as depicted in Section 7.3.10.1.

This command uses the PMBus read or write byte protocol.

The details of this register are shown in Table 7-57.

Table 7-57. RETRY_CONFIG Register Description

Bit	Name	Value	Description	Default	Access
7:6	RESPONSE	10	Shutdown and retry	10	Read

Table 7-57. RETRY_CONFIG Register Description (continued)

Bit	Name	Value	Description	Default	Access
5:3	RETRY_CNT		*Retry count*	000	Read/Write
		111	Retry indefinitely		
		110	Retry 64 times		
		101	Retry 32 times		
		100	Retry 16 times		
		011	Retry 8 times		
		010	Retry 4 times		
		001	Retry 1 times		
		000	Retry 0 times (Latch-off)		
2:0	RETRY_DLY		*Retry delay timer value*	100	
		111	6400ms		
		110	3200ms		
		101	1600ms		
		100	800ms		
		011			
		010			
		001			
		000			

Note

- A write command to this register must be preceded by the MFR_WRITE_PROTECT command to unlock the device first to prevent accidental or spurious writes.
- The delay used in the POWER_CYCLE command is also configured through Bit[2:0] of this register.

7.3.14.7.1.67 ADC_CONFIG_1 (E8h, Read/Write Byte)

ADC_CONFIG_1 is a manufacturer-specific command for configuring or reading channel selections and modes for ADC sampling as described in Section 7.3.14.8.

This command uses the PMBus® read or write byte protocol.

The details of this register are shown in Table 7-58.

Table 7-58. ADC_CONFIG_1 Register Description

Bit	Name	Value	Description	Default	Access
7	$\overline{\text{EOC}}$		*End of conversion indication (Active Low)*	0	Read
		1	ADC is busy (Conversion in progress)		
		0	Conversion done		

Copyright © 2026 Texas Instruments Incorporated

Table 7-58. ADC_CONFIG_1 Register Description (continued)

Bit	Name	Value	Description	Default	Access
6	CONVST	1	*Software conversion start control (used with MODE = 01)* Start conversion	0	Read/Write
		0	Do not start conversion		
5:4	MODE	11	*ADC sampling mode* Continuous conversion - Single channel	00	
		10	Single channel single conversion - External pin controlled		
		01	Single channel single conversion – software controlled		
		00	Continuous conversion – auto sequenced		
3:0	CONV_CH_SEL	1001-1111	*Parameter/ADC Channel selection for sampling (MODE = 01 or 10 or 11)* Reserved	0000	
		1000	GND (Applicable only in MODE = 01 or 10)		
		0111	VIREF (Applicable only in MODE = 01 or 10)		
		0110	ADDR1 (Applicable only in MODE = 01 or 10)		
		0101	ADDR0 (Applicable only in MODE = 01 or 10)		
		0100	VAUX		
		0011	VTEMP		
		0010	IIN		
		0001	VOUT		
		0000	VIN		

Note

- A write command to this register must be preceded by the MFR_WRITE_PROTECT command to unlock the device first to prevent accidental or spurious writes.
- For MODE = 10, TEMP/EECLK/GPIO1 ADC acts as conversion start signal. TEMP/EECLK/GPIO1 must be set for this function explicitly using AUX/TEMP/EEDATA/EECLK/GPIOx register.
- MODE = 10 or 01 are debug-only modes and not recommended to be used during normal operation as these modes prevent the ADC from sampling all the necessary signals needed for the eFuse protection features.

7.3.14.7.1.68 ADC_CONFIG_2 (E9h, Read/Write Byte)

ADC_CONFIG_2 is a manufacturer-specific command for configuring or reading parameter selection and decimation rate (sample skip count) for high speed ADC sample buffering as described in Section 7.3.14.7.1.43.

This command uses the PMBus® read or write byte protocol.

The details of this register are shown in Table 7-59.

Table 7-59. ADC_CONFIG_2 Register Description

Bit	Name	Value	Description	Default	Access
7	VAUX_VTEMP_SEL	1	*Average auxiliary voltage or average temperature telemetry selection* Use VAUX ADC channel as input for AUX_AVG computation	0	Read/Write
		0	Use TEMP ADC channel as input for TEMP_AVG computation		
6	Reserved	0	Reserved	0	Read

Copyright © 2026 Texas Instruments Incorporated

Table 7-59. ADC_CONFIG_2 Register Description (continued)

Bit	Name	Value	Description	Default	Access
5:3	BUF_CH_SEL	111	*Parameter selection for buffering* Reserved (Will default to IIN)	000	Read/Write
		110	Reserved (Will default to IIN)		
		101	Reserved (Will default to IIN)		
		100	VAUX		
		011	VTEMP		
		010	IIN		
		001	VOUT		
		000	VIN		
2:0	DEC_RATE	111	*Decimation rate (sample skip count) for ADC sample buffering* Decimation rate (sample skip count) = 7	0000	
		110	Decimation rate (sample skip count) = 6		
		101	Decimation rate (sample skip count) = 5		
		100	Decimation rate (sample skip count) = 4		
		011	Decimation rate (sample skip count) = 3		
		010	Decimation rate (sample skip count) = 2		
		001	Decimation rate (sample skip count) = 1		
		000	Decimation rate (sample skip count) = 0		

Note

A write command to this register should be preceded by the MFR_WRITE_PROTECT command to unlock the device first to prevent accidental accidental/spurious writes.

7.3.14.7.1.69 PK_MIN_AVG (EAh, Read/Write Byte)

PK_MIN_AVG is a manufacturer-specific command that resets all the maximum, minimum, and average telemetry registers, such as READ_VIN_PEAK, READ_IIN_PEAK, READ_TEMP_PEAK, READ_PIN_PEAK, READ_VIN_MIN, READ_VOUT_MIN, READ_VIN_AVG, READ_VOUT_AVG, READ_IIN_AVG, READ_TEMP_AVG, and READ_PIN_AVG. This register is also used to program the number of ADC samples to be used for averaging. Averaging a higher number of samples improves the accuracy at the expense of higher latency.

This command uses the PMBus® read or write byte protocol.

The details of this register are shown in Table 7-60.

Table 7-60. PK_MIN_AVG Register Description

Bit	Name	Value	Description	Default	Access
7	RESET_PEAK	1	Reset all peak registers to 0	0	Read/Write
		0	No action		
6	RESET_AVG	1	Reset all average registers to 0	0	
		0	No action		
5	RESET_MIN	1	Reset all minimum registers to 0	0	
		0	No action		
4:3	Reserved	00	Reserved	00	
2:0	AVG_CNT	111	Average count = 128	000	
		110	Average count = 64		
		101	Average count = 32		
		100	Average count = 16		
		011	Average count = 8		
		010	Average count = 4		
		001	Average count = 2		
		000	Average count = 1		

Note

- A write command to this register should be preceded by the MFR_WRITE_PROTECT command to unlock the device first to prevent accidental accidental/spurious writes.
- As soon as the PK_MIN_AVG command is executed to clear the peak, minimum, and average registers, the RESET_PEAK, READ_MIN, and READ_AVG bits are automatically cleared to zero (0).

7.3.14.7.1.70 PSU_VOLTAGE (ECh, Read/Write Byte)

PSU_VOLTAGE is a manufacturer-specific command for configuring or reading an 8-bit data corresponding to the input power supply voltage for implementing the input cable fault detection feature.

This command uses the PMBus® read or write byte protocol.

- **Sending a value to the PSU_VOLTAGE register:**

Copyright © 2026 Texas Instruments Incorporated

Real world value of input power supply voltage in V is converted into a 10-bit binary data through PMBus® DIRECT format conversion using Equation 15 and the 'm', 'b', and 'R' coefficients corresponding to READ_VIN in Table 7-65. Hexadecimal value corresponding to the eight least significant bits from this 10-bit binary data must be written in the PSU_VOLTAGE register.

- **Interpreting the received values from the PSU_VOLTAGE register:**

  One byte of hexadecimal data read from the PSU_VOLTAGE register must be converted into a 10-bit binary data by appending the READ_VIN[9:8] bits to the left side. The hexadecimal value corresponding to this 10-bit binary data must be converted to a real world value of input power supply voltage in V through PMBus® DIRECT format conversion using Equation 14 and the 'm', 'b', and 'R' coefficients corresponding to READ_VIN in Table 7-65.

The details of this register are shown in Table 7-61.

Table 7-61. PSU_VOLTAGE Register Description

Bit	Name	Description	READ_VIN[9:8]	Minimum Value	Maximum Value	Default Value	Access
7:0	PSU_VOLTAGE	Nominal input power supply voltage	00	0x00h (0V)	0xFFh (21.87V)	0xA3h (13.98V)	Read/Write
			01	0x00h (21.95V)	0xFFh (43.83V)	0xA3h (35.94V)	
			10	0x00h (43.91V)	0xFFh (65.79V)	0xA3h (57.89V)	
			11	0x00h (65.87V)	0xFFh (19.48V)	0xA3h (79.85V)	

Note

- Programming this register with the nominal PSU voltage is recommended to avoid unnecessary fault assertions
- A write command to this register must be preceded by the MFR_WRITE_PROTECT command to unlock the device first to prevent accidental or spurious writes.

7.3.14.7.1.71 CABLE_DROP (EDh, Read/Write Byte)

CABLE_DROP is a manufacturer-specific command that allows configuring or reading an 8-bit reference threshold for the maximum cable voltage drop expected to implement the input cable fault detection feature. This command uses the PMBus® DIRECT format. When reading and writing to this register, use the coefficients shown in Table 7-65, Equation 14, and Equation 15.

This command uses the PMBus® read or write byte protocol.

Contents of this register are compared with the difference between PSU_VOLTAGE and VIN ADC telemetry values. If this difference value exceeds the value in the CABLE_DROP register, the VIN_CABLE_FAULT flags are set in the respective registers. The $\overline{\text{SMBA}}$ signal is asserted. When the difference between PSU_VOLTAGE and VIN ADC telemetry value falls below the CABLE_DROP threshold, and the CLEAR_FAULTS command is sent afterwards, this warning flag and alart clear. The details of this register are shown in Table 7-50.

Table 7-62. CABLE_DROP Register Description

Bit	Name	Description	Minimum Value	Maximum Value	Default Value	Access
7:0	CABLE_DROP	Maximum cable voltage drop expected	0x00h (0V)	0xFFh (13.98V)	0xFFh (13.98V)	Read/Write

- When the input cable fault is detected, the device:
- sets the NONE_OF_THE_ABOVE/UNKNOWN bit in the STATUS_BYTE register

- sets the NONE_OF_THE_ABOVE/UNKNOWN bit in the upper byte of the STATUS_WORD register
- sets the VIN_CABLE_FLT bit in the STATUS_MFR_SPECIFIC_2 register
- notifies the host asserting $\overline{\text{SMBA}}$, if it is not masked setting the UNKNOWN bit low in the ALERT_MASK register

Note

- If this feature is not used, it is recommended to configure the setting to its maximum value to prevent unnecessary fault assertions.
- A write command to this register must be preceded by the MFR_WRITE_PROTECT command to unlock the device first to prevent accidental or spurious writes.

7.3.14.7.1.72 IMON OFFSET CALIBRATION (F2h, Read/Write Byte)

IMON OFFSET CALIBRATION is a manufacturer-specific register that allows user to store offset factor for calibration of IMON readings captured by ADC. These calibration factor is applied for calculation of IIN, PIN and EIN parameters for reporting over PMBus.

Table 7-63. IMON OFFSET CALIBRATION Register Description

BIT	NAME	VALUE	DESCRIPTION	DEFAULT	ACCESS
7	SIGN	1	Sign of the IMON offset correction factor Negative Offset Factor	0	R/W
		0	Positive Offset Factor		
6:0	OFFSET_FACTOR	0 to 127	Offset factor added or subtracted from IMON ADC readings for correcting the offset error.	000	R/W

7.3.14.7.1.73 INS_DLY (F9h, Read/Write Byte)

INS_DLY is a manufacturer-specific command which is used to program the insertion delay at start-up. The device implements a fixed analog insertion delay of 14ms (typical). As described in Table 7-64, the INS_DLY register specifies a delay in addition to the fixed 14ms delay.

This command uses the PMBus® read/write byte protocol.

Table 7-64. INS_DLY Register Description

Bit	Name	Description	Value	Effective Insertion Delay (ms)	Default Value	Access
7:0	INS_DLY	Insertion delay at start-up	0x00h	0ms	0x00h	Read/Write
			0x01h	10ms		
			0x02h	50ms		
			0x03h	100ms		
			0x04h	200ms		
			0x05h	300ms		
			0x06h	400ms		
			0x07h	500ms		

Copyright © 2026 Texas Instruments Incorporated

Note

A write command to this register must be preceded by the MFR_WRITE_PROTECT command to unlock the device first to prevent accidental/spurious writes.

7.3.14.8 Analog-to-Digital Converter

The TPS1689x integrates a 10-bit, 460 KSPS SAR ADC preceded by an analog MUX. The following signals are available for sampling by the ADC:

1. VIN
2. VOUT
3. VIMON
4. VTEMP
5. VAUX
6. ADDR0
7. ADDR1

The ADC uses a 5kHz low-pass filter at the input to suppress high frequency noise (outside the ADC Nyquist bandwidth) and prevent aliasing.

Note

The ADC also supports a high performance mode wherein the sampling rate is traded off in favor of improved DNL and INL. In this mode, the sampling rate is reduced to 270 KSPS. This mode can be selected by setting the ADC_HI_PERF bit in the DEVICE_CONFIG register.

During normal operation, the ADC automatically sequences the channels. The ADC channel sequencer manages MUX channel selection for sampling.

Note

- The ADDR0 and ADDR1 signals are sampled only at startup to decode the PMBus® target address.
- The ADC implements background self-calibration to eliminate offset and gain errors inherent to the ADC.

The device also supports buffering of multiple samples of a selected parameter in RAM, which can be read by the host using the ADC_SAMPLE_BUF block read command. This allows the system designer to reconstruct the time domain profile/waveform of that parameter in a given interval. This can be useful during design/debugging by functioning like an in-built "digital oscilloscope". The ADC channel to sample for buffering and the decimation rate/sample skip count can be user configured using PMBus® writes to the ADC_CONFIG_2 register.

The TPS1689x can post-process raw ADC sampled data to compute the following derived parameters:

1. VIN Average
2. VIN Peak
3. VIN Min
4. VOUT Average
5. VOUT Min
6. IIN Average
7. IIN Peak
8. PIN
9. PIN Average
10. PIN Peak
11. EIN
12. Temperature Average

Copyright © 2026 Texas Instruments Incorporated

13. Temperature Peak

A single ADC sample can have higher errors due to internal noise. It is possible to improve the ADC SNR and the telemetry accuracy by averaging higher number of samples. The number of samples to be averaged is user-programmable using the PK_MIN_AVG register. The minimum, maximum, and average values can also be reset using the PK_MIN_AVG register.

The TPS1689x performs digital comparison on the ADC sampled data to detect the following system events.

1. VIN UV WARN
2. VIN UV FAULT
3. VIN OV WARN
4. VOUT PGOOD
5. IIN OC WARN
6. OT WARN
7. OT FAULT
8. PIN OP WARN

The results of the comparisons are reflected in the PMBus® status registers and can be configured to trigger other actions e.g. FET turn OFF (protection response) and $\overline{\text{FLT}}$ output assertion for faults, $\overline{\text{SMBA}}$ signal assertion for faults/warnings and Blackbox RAM/EEPROM update.

7.3.14.9 Digital-to-Analog Converters

The TPS1689x integrates multiple DACs which are used to set the thresholds or gains of various blocks:

1. **VIREF:** This is a 6-bit buffered voltage output DAC which provides a programmable threshold for overcurrent protection, short-circuit protection and active current sharing blocks. This can be programmed using the VIREF register. This signal is available internally always for these blocks, and optionally can be brought on the IREF pin to drive other devices in a parallel chain.
2. **IDVDT:** This is a 2-bit current output DAC which sources current on the DVDT pin to provide output Slew Rate (DVDT) control. This can be programmed using the DEVICE_CONFIG[10:9] register bits.
3. **VOV:** This is a 8-bit DAC which provides a programmable threshold for the VIN overvoltage protection comparator. This can be programmed using the VIN_OV_FLT register.

7.3.14.10 DIRECT Format Conversion

For telemetry and configuration parameters, the TPS1689x supports DIRECT format. Digital codes for telemetry or configuration parameters can be converted to equivalent real world units using Equation 14 and Equation 15.

- **Interpreting received values:**

  The host system uses Equation 14 to convert the value received from the PMBus device into a reading of V, A, °C, or W:

$$X = \frac{1}{m}\left(Y \times 10^{-R} - b\right) \tag{14}$$

  Where:

  – X, is the calculated, *real world* value in the appropriate units (V, A, °C, or W);
  – m, the slope coefficient, is a two byte, two's complement integer;
  – Y, is a two byte two's complement integer received from the PMBus® device;
  – b, the offset, is a two byte, two's complement integer; and
  – R, the exponent, is a one byte, two's complement integer.

- **Sending a value:**

  To send a value, the host must use Equation 15 to find the value of Y:

Copyright © 2026 Texas Instruments Incorporated

$$Y = (mX + b) \times 10^{R} \quad (15)$$

Where:

- Y is the two byte two's complement integer to be sent to the unit;
- m, the slope coefficient, is the two byte, two's complement integer;
- X, a *real world* value, in units such as V, A, °C, or W, to be converted for transmission;
- b, the offset, is the two byte, two's complement integer; and
- R, the exponent, is the decimal value equivalent to the one byte, two's complement integer.

Table 7-65. TPS1689x PMBus DIRECT Format Conversion Guide

PARAMETER	UNITS	ZERO CODE ANALOG VALUE	FULL SCALE DIGITAL CODE	FULL-SCALE ANALOG VALUE	m	b	R
READ_VIN	V	0	0x3FF	87.75	1166	0	- 2
READ_VIN_PEAK	V	0	0x3FF	87.75	1166	0	- 2
READ_VIN_PEAK_EEPROM	V	0	0xFF	87.75	2906	0	- 3
READ_VIN_MIN	V	0	0x3FF	87.75	1166	0	- 2
READ_VIN_AVG	V	0	0x3FF	87.75	1166	0	- 2
VIN_UV_FLT	V	0	0xFF	87.75	2906	0	- 3
VIN_UV_WARN	V	0	0xFF	87.75	2906	0	- 3
VIN_OV_WARN	V	0	0xFF	87.75	2926	-185	-3
VIN_OV_FLT	V	16	0xFF	80.00	3984	−63750	- 3
READ_VOUT	V	0	0x3FF	87.75	1166	0	- 2
READ_VOUT_AVG	V	0	0x3FF	87.75	1166	0	- 2
READ_VOUT_MIN	V	0	0x3FF	87.75	1166	0	- 2
VOUT_UV_WARN	V	0	0xFF	87.75	2906	0	- 3
VOUT_PGTH	V	0	0xFF	87.75	2906	0	- 3
READ_VAUX	V	0	0x3FF	1.95	5251	0	- 1
READ_VAUX_AVG	V	0	0x3FF	1.95	5251	0	- 1
READ_TEMPERATURE	°C	− 229.3	0x3FF	501.40	140	32103	- 2
READ_TEMP_AVG	°C	− 229.3	0x3FF	501.40	140	32103	- 2
READ_TEMP_PEAK	°C	− 229.3	0x3FF	501.40	140	32103	- 2
READ_TEMP_PEAK_EEPROM	°C	− 228.7	0xFF	499.80	35	8005	- 2
OT_WARN	°C	− 228.7	0xFF	499.80	35	8005	- 2
OT_FLT	°C	− 228.7	0xFF	499.80	35	8005	- 2
VIMON	V	0	0x3FF	1.95	5251	0	- 1
READ_IIN	A	0	0x3FF	$107142/R_{IMON}$	$9.547 \times R_{IMON}$	0	- 3
READ_IIN_PEAK	A	0	0x3FF	$107142/R_{IMON}$	$9.547 \times R_{IMON}$	0	- 3
READ_IIN_AVG	A	0	0x3FF	$107142/R_{IMON}$	$9.547 \times R_{IMON}$	0	- 3
READ_IIN_PEAK_EEPROM	A	0	0xFF	$107142/R_{IMON}$	$2.38 \times R_{IMON}$	0	- 3
IIN_OC_WARN	A	0	0xFF	$107142/R_{IMON}$	$2.38 \times R_{IMON}$	0	- 3
VIREF	V	0.3	0x3F	1.19	7111	− 2133	- 2
PSU_VOLTAGE	V	0	0xFF	85.00	3000	0	- 3

Table 7-65. TPS1689x PMBus DIRECT Format Conversion Guide (continued)

PARAMETER	UNITS	ZERO CODE ANALOG VALUE	FULL SCALE DIGITAL CODE	FULL-SCALE ANALOG VALUE	m	b	R
READ_PIN	W	0	0x3FF	9401785/R_{IMON}	1.08 × R_{IMON}	0	- 4
READ_PIN_AVG	W	0	0x3FF	9401785/R_{IMON}	1.08 × R_{IMON}	0	- 4
READ_PIN_PEAK	W	0	0x3FF	9401785/R_{IMON}	1.08 × R_{IMON}	0	- 4
PIN_OP_WARN	W	0	0xFF	9401785/R_{IMON}	2.72 × R_{IMON}	0	- 5
READ_EIN	J	0	0x7FFF		60	0	0

7.3.14.11 Blackbox Fault Recording

The Blackbox feature greatly enhances the ability of the system designer to debug power path related issues during design/development and in case of field returns. Along with a snapshot of the parametric data and event information through various status registers, the TPS1689x provides additional information which helps to re-create the sequence of events as they occurred in a certain interval of time. This information is available in both the on-chip volatile memory and the external I2C EEPROM (connected on the EECLK/EEDATA pins) and can be accessed through PMBus®.

Note

The PMBus® engine is up and running as soon as a stable supply is available on VDD, independent of VIN and other related internal nodes. This ensures that the Blackbox contents can be read back from a field return unit by applying power on VDD pin even if there's damage on VIN side or Power FET .

During the operation of the device, the Blackbox information is stored inside the Blackbox buffer RAM which is seven (7) bytes deep. At any point of time, issuing the READ_BB_RAM command will retrieve the most recent seven (7) events in a sequence along with the timestamp relative to each other. Each byte of this buffer RAM holds the following information about a single event:

1. A 3-bit event identifier
2. A 5-bit value which indicates the time lapse because the previous event. The lower 4 bits of the timer value represents a snapshot of the free running Blackbox tick timer at the instant of registering the event in the Blackbox RAM. The 5th bit indicates whether the timer has overflowed at least once since the last event.

The event identifier and relative timer information help the system designer to reconstruct a timeline of events as they occurred, thereby enhancing the debug capabilities as compared to viewing a single snapshot of status registers. The Blackbox tick timer is a free running timer which is reset to zero after every event. The timer update rate can be configured through the BB_CONFIG register. This allows the users to make a tradeoff between fine timing resolution and longer time span as per the debug needs. The BB_TMR_EXP bit in the BB_TIMER register indicates if the Blackbox tick timer has overflowed at least since the last event. This bit indicates whether the event entries in the RAM are relatively recent or old. This bit is latched when the timer overflows and reset to zero along with the free running timer when the next event occurs.

Here are the events which triggers a write to the Blackbox RAM:

1. VIN_UV_WARN
2. VIN_OV_WARN
3. OC_WARN
4. OT_WARN
5. OC_DET
6. IN_OP_WARN

Copyright © 2026 Texas Instruments Incorporated

Once the device encounters a global fault or alert event (based on the ALERT_MASK), the Blackbox RAM contents, along with the status registers, peak input voltage, peak input current, peak device temperature, and Blackbox timer values are written to an external EEPROM through the EECLK/EEDATA pins.

Note

The EEPROM interface is a standard I2C controller and operates at 400kHz clock speed. TI recommends using an I2C EEPROM with minimum 1Kbits of capacity and 16-byte page addressing. Examples of compatible EEPROM devices include 24LC04, 24AA04, etc.

The contents of the Blackbox RAM along with some status registers (STATUS_WORD, STATUS_MFR_SPECIFIC, and STATUS_INPUT) and certain parameters (VIN_PEAK, IIN_PEAK, and TEMPERATURE_PEAK) are stored into Page-0 of an external EEPROM when the following conditions are met. At the same time, Blackbox RAM contents and Blackbox tick timer values are locked.

1. An external EEPROM is successfully connected by setting the EXT_EEPROM bit high in the DEVICE_CONFIG register. Make sure those two (2) selected GPIO pins are physically connected to the EEPROM clock and data pins respectively on the board.
2. Any one of the three BB EEPROM write trigger bits is set in the BB_CONFIG register.

Blackbox EEPROM contents:

1. BB_RAM_0 to BB_RAM_6 [Seven (7) bytes]
2. BB_TIMER [One (1) byte]
3. STATUS_WORD [Two (2) bytes]
4. STATUS_MFR_SPECIFIC [One (1) byte]
5. STATUS_INPUT [One (1) byte]
6. VIN_PEAK [One (1) byte, Eight (8) MSBs from the 10-bit ADC output data]
7. IIN_PEAK [One (1) byte, Eight (8) MSBs from the 10-bit ADC output data]
8. TEMPERATURE_PEAK [One (1) byte, Eight (8) MSBs from the 10-bit ADC output data]
9. CHECKSUM [One (1) byte]

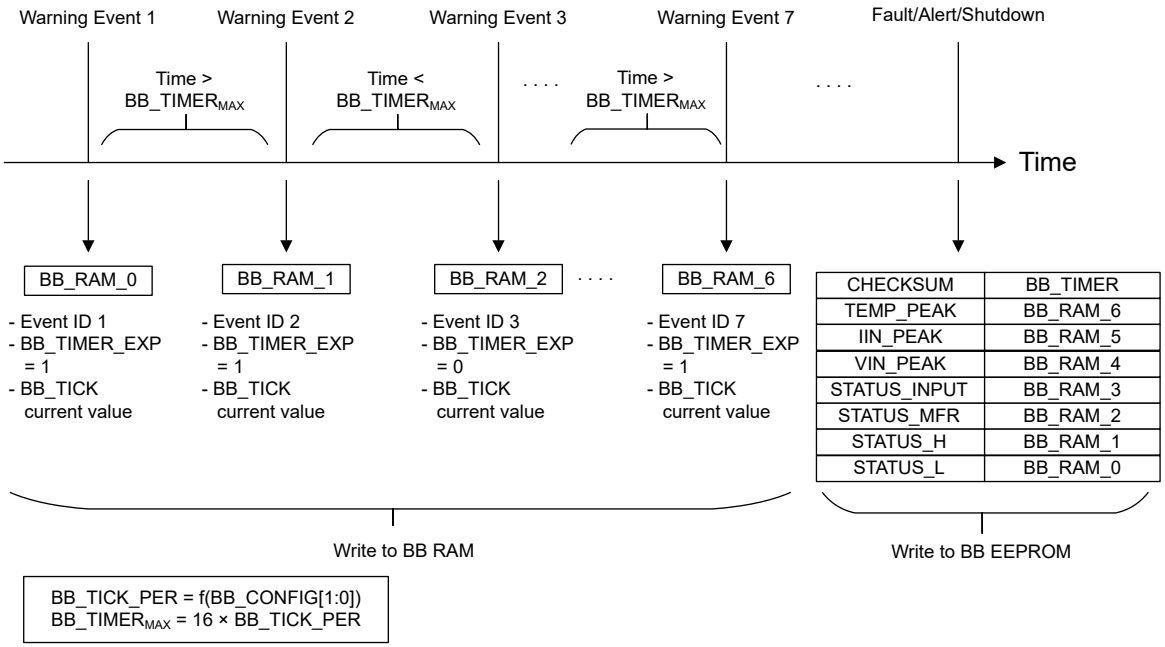

Figure 7-19. Blackbox Operation Example

7.4 Device Functional Modes

The features of the device depend on the operating mode. Table 7-66 summarizes the device functional modes.

Table 7-66. Device Functional Modes Based on EN/UVLO Pin

PIN CONDITION	DEVICE STATE	OUTPUT DISCHARGE
EN/UVLO > $V_{UVLO(R)}$	Fully ON	Disabled
$V_{SD(F)}$ < EN/UVLO < $V_{UVLO(F)}$ (time < t_{QOD})	FET OFF	Disabled
$V_{SD(F)}$ < EN/UVLO < $V_{UVLO(F)}$ (time > t_{QOD})	FET OFF	Enabled
EN/UVLO < $V_{SD(F)}$	Shutdown	Disabled

Copyright © 2026 Texas Instruments Incorporated

8 Application and Implementation

Note

Information in the following applications sections is not part of the TI component specification, and TI does not warrant its accuracy or completeness. TI's customers are responsible for determining suitability of components for their purposes, as well as validating and testing their design implementation to confirm system functionality.

8.1 Application Information

The TPS1689x is a high-current eFuse that is typically used for input power rail protection and monitoring applications. The device operates from 9V to 80V and supports various user adjustable and programmable protection options. The device provides ability to control inrush current and offers protection against overvoltage, overcurrent, short-circuit and overtemperature conditions. The device can be used in a variety of systems such as server motherboards, add-on cards, graphics cards, accelerator cards, enterprise switches, routers, and so forth. The design procedure explained in the subsequent sections can be used to select the supporting component values based on the application requirements. Additionally, a spreadsheet design tool, *TPS1689x Design Calculator* is available in the web product folder.

8.1.1 Single Device, Standalone Operation

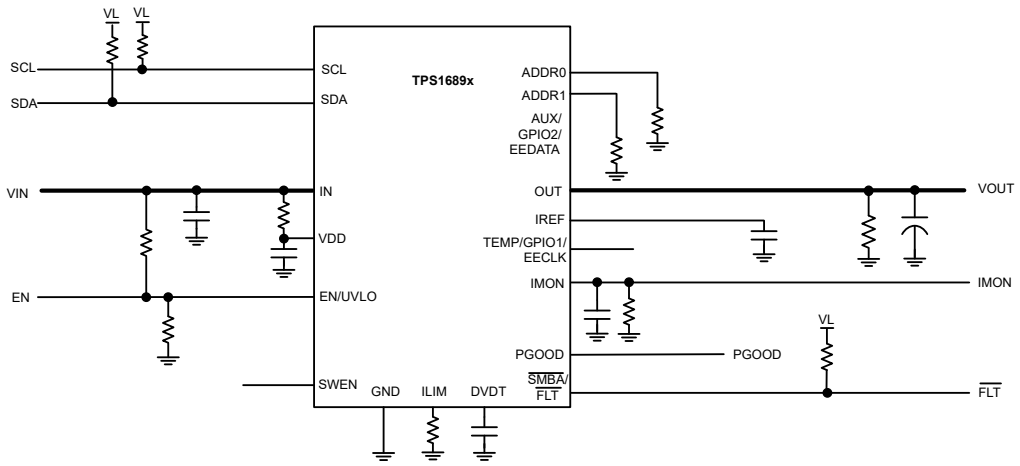

Figure 8-1. Single Device, Standalone Operation

8.1.2 Single TPS1689x and Multiple TPS1685 Devices, Parallel Connection

Applications which need higher current input protection along with digital interface for telemetry, control, configurability can use one or more TPS1685 devices in parallel with TPS1689x as shown in Figure 8-2.

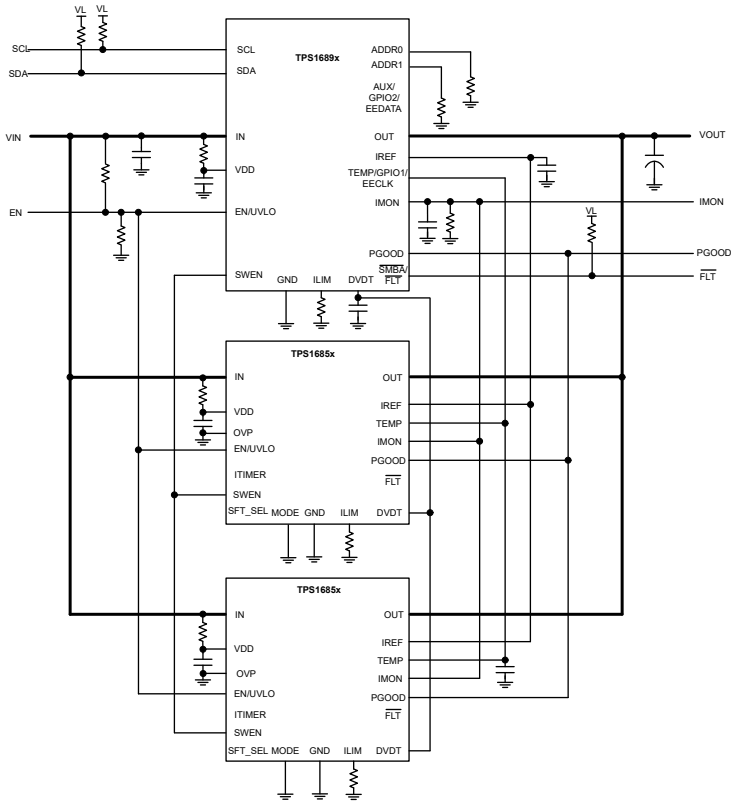

Figure 8-2. TPS1689x Connected in Parallel with TPS1685x For Higher Current Support With PMBus®

In this configuration, the TPS1689x acts as the primary device and controls the other TPS1685x devices in the chain which are designated as secondary devices. This configuration is achieved by connecting the primary device as follows:

1. VDD connects to IN through an R-C filter.
2. DVDT connects through capacitor to GND.
3. IREF connects through capacitor to GND.
4. IMON connects through resistor to GND.
5. ILIM connects through resistor to GND.

The secondary devices must connect in the following manner:

1. VDD connects to IN through a R-C filter.
2. MODE pin connects to GND.
3. ITIMER pin is left OPEN.
4. ILIM connects through resistor to GND.

The following pins of all devices must connect together:

1. IN
2. OUT
3. EN/UVLO
4. DVDT
5. SWEN
6. PGOOD
7. IMON
8. IREF
9. TEMP

Copyright © 2026 Texas Instruments Incorporated

In this configuration, all the devices are powered up and enabled simultaneously.

- The TPS1689x monitors the combined VIN, VOUT, IMON, TEMP and reports it over the PMBus® telemetry interface.
- The OVLO threshold is set to maximum value in all devices by default. For TPS1685x devices, the OV threshold is fixed in hardware and cannot be changed. The TPS1689x OV threshold can be lowered through PMBus® writes to the VIN_OV_FLT register. In this case, the TPS1689x uses the SWEN pin to turn off the TPS1685x devices during OV conditions.
- The UVLO threshold for all devices is set by the external resistor divider from IN to GND on the EN/UVLO pin. The TPS1689x UV threshold can be changed through PMBus® writes to the VIN_UV_FLT register. In this case, the TPS1689x uses the SWEN pin to turn off the TPS1685x devices during UV conditions.
- During inrush, the output of all the devices are ramped together based on the DVDT capacitor. However, the TPS1689x DVDT sourcing current is configurable through the PMBus® writes to the DEVICE_CONFIG[10:9] register to change the inrush behavior of the whole chain. The TPS1689x controls the DVDT ramp rate for the whole chain and secondary devices simply follow the ramp rate.
- The TPS1689x controls the overall overcurrent threshold of the parallel chain by setting the VIREF threshold voltage using its internal DAC. The VIREF voltage can be programmed through PMBus® to change the overcurrent threshold.
- The TPS1689x controls the transient overcurrent blanking interval (t_{OC_TIMER}) for the whole system through PMBus® writes to the OC_TIMER register. Once the digital timer expires, the TPS1689x pulls the SWEN pin low to signal all devices to break the circuit simultaneously.
- The system Power Good (PGOOD) indication is a combination of all the individual device PGOOD indications. All the devices hold the respective PGOOD pins low until the power FET is fully turned on. Once all devices have reached steady-state, the devices release the respective PGOOD pin pull-down and the PGOOD signal for the whole chain is asserted high. The TPS1685x secondary devices have control over the system PGOOD assertion only during startup. Once in steady state, only the TPS1689x controls the de-assertion of the PGOOD based on the VOUT_PGTH register setting.
- The fault indication ($\overline{FLT}$) for the whole system is provided by TPS1689x. However, each secondary device also asserts its own $\overline{FLT}$ independently.

Power up: After power up or enable, all the eFuse devices initially hold the SWEN low until the internal blocks are biased and initialized correctly. After that, each device releases its own SWEN. After all devices have released their SWEN, the combined SWEN goes high and the devices are ready to turn on the respective FETs at the same time.

Inrush: During inrush, because the DVDT pins are tied together to one DVDT capacitor all the devices turn on the output with the same slew rate (SR). Select the common DVDT capacitor (C_{DVDT}) as per Equation 16 and Equation 17.

$$SR\left(\frac{V}{ms}\right) = \frac{I_{INRUSH}\,(mA)}{C_{OUT}\,(\mu F)} \tag{16}$$

$$C_{dVdt}\,(pF) = \frac{50000 \times k}{SR\left(\frac{V}{ms}\right)} \tag{17}$$

Refer to Section 7.3.4.1 section for more details.

The internal balancing circuits establish that the load current is shared among all devices during start-up. This action prevents a situation where some devices turn on faster than others and experience more thermal stress as compared to other devices. This prevents premature or partial shutdown of the parallel chain, or even SOA damage to the devices. The current balancing scheme establishes the inrush capability of the chain scales according to the number of devices connected in parallel, thereby establishing successful start-up with larger output capacitances or higher loading during start-up. All devices hold their respective PGOOD signals low during start-up. After the output ramps up fully and reaches steady-state, each device releases its own PGOOD pulldown. Because the DVDT pins of all devices are tied together, the internal gate high detection of all devices is synchronized. There can be some threshold or timing mismatches between devices leading to

PGOOD assertion in a staggered manner. However, because the PGOOD pins of all devices are tied together, the combined PGOOD signal becomes high only after all devices have released the PGOOD pulldown. This signals the downstream load that it is okay to draw power.

Steady-state: During steady-state, all devices share current nearly equally using the active current sharing mechanism which actively regulates the respective device R_{DSON} to evenly distribute current across all the devices in the parallel chain. Once PGOOD is asserted, de-assertion is controlled only by TPS1689x and based on VOUT_PGTH register setting.

Overcurrent during steady-state: The circuit-breaker threshold for the parallel chain is based on the total system current rather than the current flowing through individual devices. This is done by connecting the IMON pins of all the devices together to one resistor (R_{IMON}) to GND. Similarly, the IREF pins of all devices are tied together and TPS1689x uses internal programmable DAC (VIREF) to generate a common reference for the overcurrent protection block in all the devices. This action helps minimize the contribution of V_{IREF} variation to the overall mismatch in overcurrent threshold between devices.

In this case, select the R_{IMON} as per the following equation:

$$R_{IMON} = \frac{V_{IREF}}{G_{IMON} \times I_{OCP(TOTAL)}} \tag{18}$$

The start-up current limit and active current sharing threshold for each device is set independently using the ILIM pin. The R_{ILIM} value for the TPS1689x and TPS1685 must be selected based on the following equation:

$$R_{ILIM} = \frac{1.1 \times N \times R_{IMON}}{3} \tag{19}$$

Where N = Number of devices in parallel chain (1 × TPS1689x + (N - 1) × TPS1685x)

Other variations: The IREF pin can be driven from an external precision voltage reference with low impedance.

During an overcurrent event, the overcurrent detection of all the devices is triggered simultaneously. This in turn triggers the overcurrent blanking timer (OC_TIMER) in TPS1689x. The TPS1689x uses the OC_TIMER expiry event as a trigger to pull the SWEN low for all the devices, thereby initiating the circuit-breaker action for the whole chain at the same time. This mechanism establishes that mismatches in the current distribution, overcurrent thresholds and OC_TIMER intervals among the devices do not degrade the accuracy of the circuit-breaker threshold of the complete parallel chain or the overcurrent blanking interval. However, the secondary devices also maintain the backup overcurrent timer and can trigger the shutdown of the whole chain if the primary device fails to do so within a certain interval.

Severe overcurrent (short circuit): If there is a severe fault at the output (for example, output shorted to ground with a low impedance path), the current builds up rapidly to a high value and triggers the fast-trip response in each device. The devices use two thresholds for fast-trip protection – a user-adjustable threshold as well as a fixed threshold (I_{FFT} only during steady-state). After the fast-trip, the TPS1689x relies on the SC_RETRY configuration bit setting in the DEVICE_CONFIG register to determine if the whole chain enters a latched fault or performs a fast recovery by restarting in current limit manner. If it enters a latched fault, the devices remain latched off until the device is power cycled or re-enabled, or auto-retry after a delay based on the RETRY_CONFIG register setting.

8.1.3 Multiple TPS1689x Devices: Parallel Connection With Individual Telemetry

Applications which need higher current support along with separate digital interface for telemetry, control and configurability for each eFuse can use multiple independent TPS1689x if desired instead of 1 TPS1689x and multiple TPS1685x.

Some modifications with respect to TPS1689x in parallel with multiple TPS1685x is needed and shown in Figure 8-3

- IMON pins to be separated. Each device is configurable for its own OCP response. The individual OCP threshold must be set to 1/Nth of system OCP threshold where N is total no of devices in parallel.

Copyright © 2026 Texas Instruments Incorporated

- PMBus address for both devices to be set to different values so that each device can be accessed independently.
- /FLT pins to be kept separate so that it is easy to debug which device encountered a fault.

When operating multiple TPS1689x devices in parallel, it is recommended to configure the devices in latch-off mode with fast recovery disabled to prevent potential race conditions between devices.

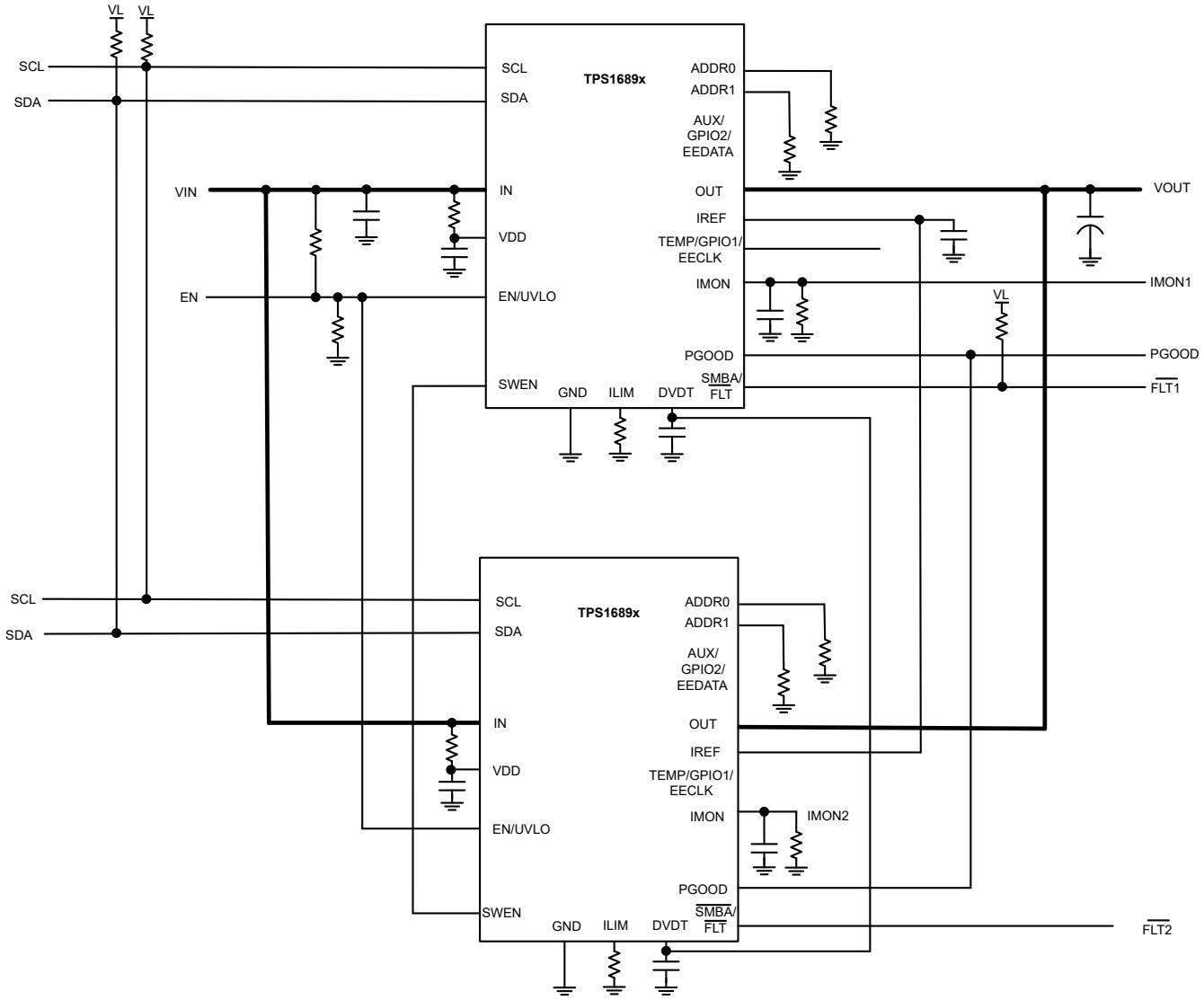

Figure 8-3. Independent Stacking With Multiple TPS1689x

8.1.4 Multiple Devices, Independent Operation (Multi-zone)

Systems which need power from a common source to be distributed to different power zones can use multiple TPS1689x devices connected as shown in Figure 8-4 to provide independent monitoring and protection for each zone.

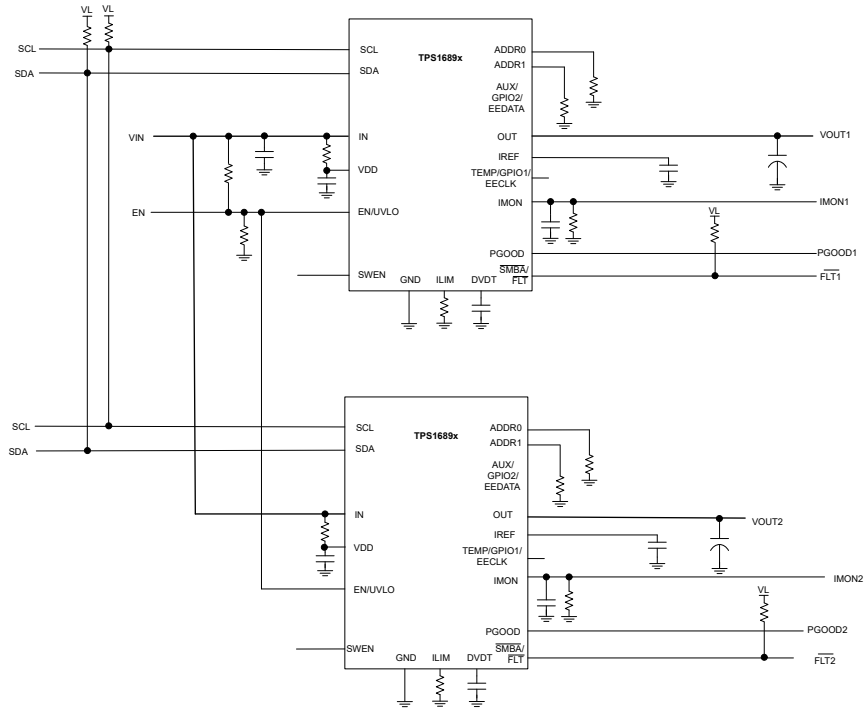

Figure 8-4. Multiple TPS1689x Devices Delivering Power to Different Zones in a System

In this configuration, the following pins of each device are tied to the respective pins on the other devices.

1. IN
2. EN/UVLO
3. SCL
4. SDA

Note

The EN/UVLO pins can be separated if each zone must have a different hardware control signal or UVLO threshold.

In this configuration, all the devices are monitored and controlled independently through the PMBus®. Because the devices share the same bus, the devices must have different device addresses, which can be set using different pin-strapping combinations on the ADDR0 and ADDR1 pins.

8.2 Typical Application: 54V, 2kW Power Path Protection with PMBus® Interface in Datacenter Servers

This design example considers a 54V system operating voltage with a tolerance of ±10%. The maximum steady-state load current is 40A. If the load current exceeds 44A, the eFuse circuit must allow transient overload currents up to a 4ms interval. For persistent overloads lasting longer than that, the eFuse circuit must break the circuit and then latch-off. The eFuse circuit must charge a bulk capacitance of 2mF. Figure 8-5 shows the application schematic for this design example.

Copyright © 2026 Texas Instruments Incorporated

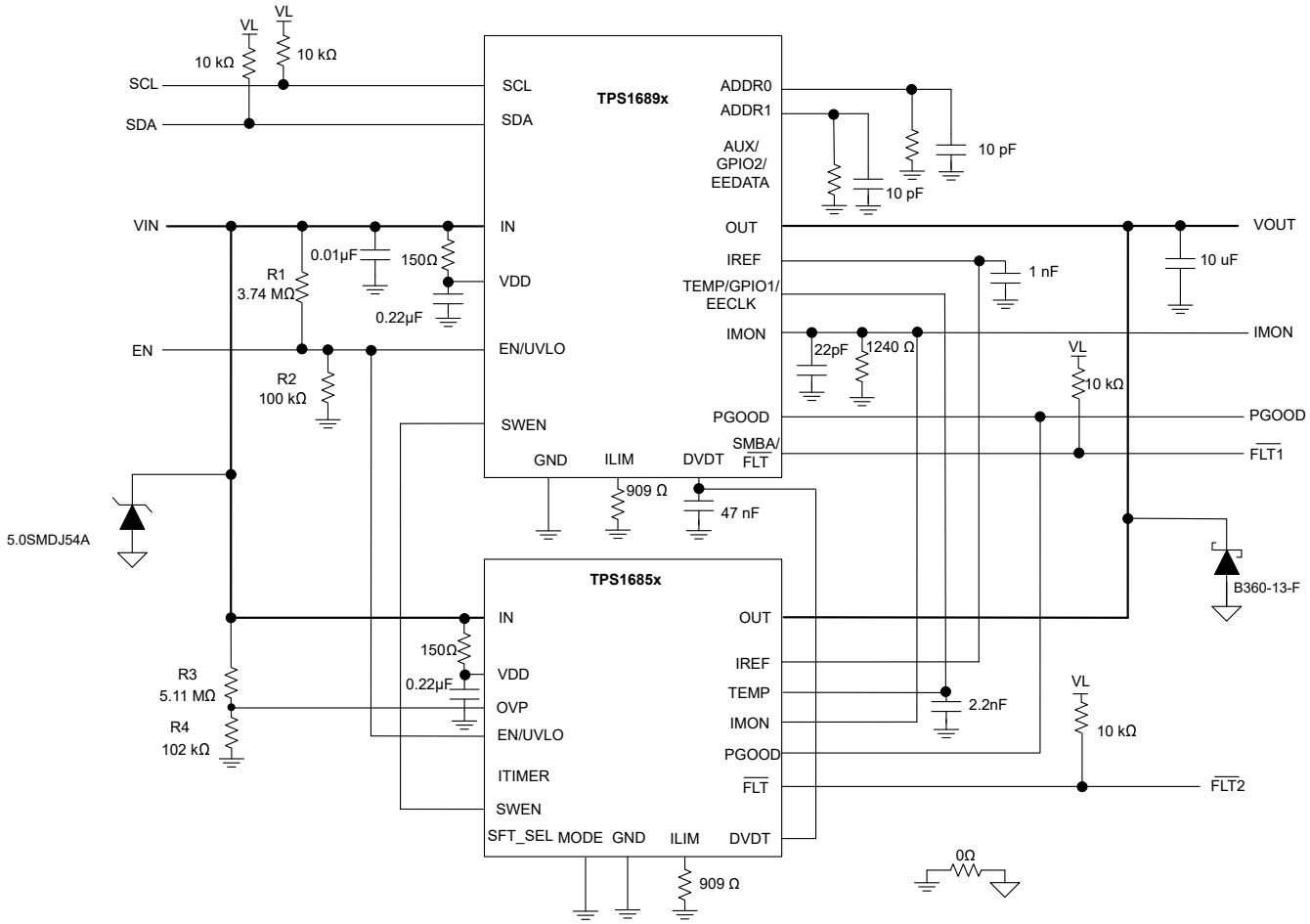

Figure 8-5. Application Schematic for a 54V, 2kW Power Path Protection Circuit with PMBus® Interface

8.2.1 Design Requirements

Table 8-1 shows the design parameters for this application example.

Table 8-1. Design Parameters

PARAMETER	VALUE
Input voltage range (V_{IN})	43V – 60V
Maximum DC load current ($I_{OUT(max)}$)	40A
Maximum output capacitance (C_{LOAD})	2mF
Maximum ambient temperature	55°C
Transient overload blanking timer	4ms
Need to survive a “hot-short” on output condition?	Yes
Need to survive a “power up into short” condition?	Yes
Can the board be hotplugged in or power cycled?	Yes
Load current monitoring needed?	Yes
Need PMBus® interface for telemetry, control, and configurability?	Yes
Fault response	Latch-off

8.2.2 Detailed Design Procedure

- **Determining the number of eFuse devices to be used in parallel**

  As the design must have PMBus® functionality or interface for telemetry, control, and configuration, the TPS1689x eFuse must be used as a primary device in parallel with TPS1685x eFuses as secondary devices to support the required steady-state thermal design current. By factoring in a small variation in the junction to ambient thermal resistance ($R_{\theta JA}$), each TPS1689x eFuse and TPS1685x eFuse is rated at maximum RMS currents of 20A and 20A respectively with a maximum junction temperature of 125°C. Therefore, Equation 20 can be used to calculate the number of TPS1685x eFuses (N-1) to be in parallel with a TPS1689x eFuse to support the maximum steady state DC load current ($I_{LOAD(max)}$), for which the solution must be designed.

$$(N-1) \geq \frac{\left(I_{OUT(max)} - 20\right)}{20} \tag{20}$$

  According to Table 8-1, $I_{OUT(max)}$ is 40A. Therefore, one (1) TPS1689x and one(1) TPS1685x eFuses connect in parallel to support the desired steady-state load current.

- **Setting up the primary and secondary devices in a parallel combination of TPS1689x and TPS1685x eFuses**

  The TPS1689x functions as a primary device by default. By connecting the MODE pin of all the TPS1685x eFuses to GND, they are configured as secondary devices.

- **Selecting the V_{IREF} to set the reference voltage for overcurrent protection and active current sharing**

  The reference voltage (V_{IREF}) for overcurrent protection and active current sharing is at 1V by default. However, it can be programmed via PMBus® using the VIREF register if another reference voltage is needed in the range from 0.3V to 1.2V. When the voltage at the IMON pin (V_{IMON}) is used as an input to an ADC to monitor the system current or to implement the Platform Power Control (Intel PSYS) functionality inside the VR controller, V_{IREF} must be set to half of the maximum voltage range of the ISYS_IN input of the controller. This action provides the necessary headroom and dynamic range for the system to accurately monitor the load current up to the fast-trip threshold (2 × $I_{OCP(TOTAL)}$). For improved noise immunity, place a 1nF ceramic capacitor from the IREF pin to GND.

  Note

  Maintain V_{IREF} within the recommended voltage to ensure proper operation of overcurrent detection circuit.

- **Selecting the R_{IMON} resistor to set the overcurrent (circuit-breaker) and fast-trip thresholds during steady-state**

  TPS1689x eFuse responds to the output overcurrent conditions during steady-state by turning off the output after a user-adjustable transient fault blanking interval. This eFuse continuously senses the total system current (I_{OUT}) and produces a proportional analog current output (I_{IMON}) on the IMON pin. This generates a voltage (V_{IMON}) across the IMON pin resistor (R_{IMON}) in response to the load current, which is defined as Equation 21.

$$V_{IMON} = I_{OUT} \times G_{IMON} \times R_{IMON} \tag{21}$$

  G_{IMON} is the current monitor gain (I_{IMON} : I_{OUT}), the typical value is 18.23µA/A. The overcurrent condition is detected by comparing the V_{IMON} against the V_{IREF} as a threshold. The circuit-breaker threshold during steady-state ($I_{OCP(TOTAL)}$) can be calculated using Equation 22.

$$I_{OCP(TOTAL)} = \frac{V_{IREF}}{G_{IMON} \times R_{IMON}} \tag{22}$$

  In this design example, $I_{OCP(TOTAL)}$ is considered to be around 44A. Hence, $I_{OCP(TOTAL)}$ is required to be set at 44A, and R_{IMON} can be calculated to be 1246.6Ω with G_{IMON} as 18.23µA/A and V_{IREF} as 1V. The value

Copyright © 2026 Texas Instruments Incorporated

of R_{IMON} selected is 1240Ω with 0.1% tolerance and power rating of 100mW. This results in a circuit-breaker threshold of 44.2A. For noise immunity, place a 22pF ceramic capacitor from the IMON pin to GND.

Note

The total system output current (I_{OUT}) must be considered when selecting R_{IMON}, not the current carried by each individual device.

- **Selecting the R_{ILIM} resistor to set the active sharing threshold during steady-state**

  R_{ILIM} is used in setting up the active current sharing threshold during steady state among the devices in a parallel chain. Each device continuously monitors the current flowing through it (I_{DEVICE}) and outputs a proportional analog output current on its own ILIM pin. This in turn produces a proportional voltage (V_{ILIM}) across the respective ILIM pin resistor (R_{ILIM}), which is expressed as Equation 23.

$$V_{ILIM} = I_{DEVICE} \times G_{ILIM} \times R_{ILIM} \tag{23}$$

  G_{ILIM} is the current monitor gain (I_{ILIM} : I_{DEVICE}), the typical value is 18.24µA/A.

  – ***Active current sharing during steady-state*:** This mechanism operates only after the device reaches steady-state and acts independently by comparing its own load current information (V_{ILIM}) with the Active Current Sharing reference ($CLREF_{LIN}$) threshold, defined as Equation 24.

  – $$CLREF_{LIN} = \frac{1.1 \times V_{IREF}}{3} \tag{24}$$

  Therefore, RILIM must be calculated using Equation 25 to define the active current sharing threshold as IOCP(TOTAL)/N, where N is the number of devices in parallel. Using N = 2, RIMON = 1240Ω, and Equation 25, RILIM can be calculated to be 909.3Ω. The closest standard value of 909Ω with 0.1% tolerance and power rating of 100mW resistances are selected as RILIM for each device.

$$R_{ILIM} = \frac{1.1 \times N \times R_{IMON}}{3} \tag{25}$$

Note

To determine the value of R_{ILIM}, Equation 26 must be used if a different threshold for active current sharing ($I_{LIM(ACS)}$) is desired.

$$R_{ILIM} = \frac{1.1 \times V_{IREF}}{3 \times G_{ILIM} \times I_{LIM(ACS)}} \tag{26}$$

- **Selecting the overcurrent blanking timer duration (t_{OC_TIMER})**

  The overcurrent blanking timer duration (t_{OC_TIMER}) for the entire parallel chain is controlled by TPS1689x and is set to 3.2ms by default. However, it can be programmed via PMBus® using the OC_TIMER (E6h) register to a different value. The ITIMER pin for all the secondary TPS1685x devices must be left open.

- **Selecting the resistors to set the undervoltage lockout threshold**

The undervoltage lockout (UVLO) threshold is adjusted by employing the external voltage divider network of R1 and R2 connected between IN, EN/UVLO, and GND pins of the device as described in Section 7.3.1 section. The resistor values required for setting up the UVLO threshold are calculated using Equation 27. To minimize the input current drawn from the power supply, TI recommends using higher resistance values for R1 and R2. From the device electrical specifications, UVLO rising threshold $V_{UVLO(R)}$ = 1.2V. From the design requirements, VIN_{UVLO} = 46V. First select the value of R1 = 3.74MΩ and use Equation 27 to calculate R2 = 100kΩ. Use the closest standard 1% resistor values: R1 = 3.74MΩ and R2 = 100kΩ. For noise reduction, place a 100pF ceramic capacitor across the EN/UVLO pin and GND.

- $$V_{IN(UV)} = V_{UVLO(R)} \frac{R_1 + R_2}{R_2} \quad (27)$$

- **Selecting the resistors to set the overvoltage lockout threshold**

  The overvoltage lockout (OVLO) threshold is adjusted by employing the external voltage divider network of R3 and R4 connected between IN, OVLO, and GND pins of the device as described in overvoltage protection section. The resistor values required for setting up the OVLO threshold are calculated using below equation.

- $$V_{IN(OV)} = V_{OVLO(R)} \frac{R_1 + R_2}{R_2} \quad (28)$$

  To minimize the input current drawn from the power supply, TI recommends using higher resistance values for R3 and R4. From the device electrical specifications, OVLO rising threshold $V_{OVLO}(R)$ = 1.164V. From the design requirements, VIN_{OVLO} = 60V. First select the value of R1 = 5.11MΩ and use Equation 27to calculate R3 = 101kΩ. Use the closest standard 1% resistor values: R3 = 5.11MΩ and R4 = 102kΩ. For noise reduction, place a 10pF ceramic capacitor across the OVLO pin and GND.

- **Selecting the R-C filter between VIN and VDD for TPS1689x and TPS1685x**

  VDD pin is intended to power the internal control circuitry of the eFuse with a filtered and stable supply, not affected by system transients. Therefore, use an R (150Ω) – C (0.22µF) filter from the input supply (IN pin) to the VDD pin. This helps to filter out the supply noises and to hold up the controller supply during severe faults such as short circuit at the output. In a parallel chain, this R-C filter must be employed for each device.
- **Selecting the pullup resistors for PMBus® SCL, SDA, and $\overline{\text{SMBA}}$ lines**

  The SCL, SDA, and $\overline{\text{SMBA}}$ lines can be pulled up to potentials less than 5V in general with pull-up resistors of 10kΩ. However, to obtain the appropriate values of these pull-up resistors in accordance with the system specifications, please refer to I2C Bus Pullup Resistor Calculation.
- **Configuring the PMBus® target device address**

  Place appropriate resistors across ADDR0 and ADDR1 to GND or leave these pins floating or connect them to GND as described in Section 7.3.14.1 to set the preferred device address. To improve the noise immunity for correct address decoding, connect 10pF ceramic capacitors in parallel with the resistors on ADDR0 and ADDR1.
- **Selection of TVS diode at input and Schottky diode at output**

  In the case of a short circuit and overload current limit when the device interrupts a large amount of current instantaneously, the input inductance generates a positive voltage spike on the input, whereas the output inductance creates a negative voltage spike on the output. The peak amplitudes of these voltage spikes (transients) are dependent on the value of inductance in series with the input or output of the device. Such transients can exceed the absolute maximum ratings of the device and eventually lead to failures due to electrical overstress (EOS) if appropriate steps are not taken to address this issue. Typical methods for addressing this issue include:

  1. Minimize lead length and inductance into and out of the device.
  2. Use a large PCB GND plane.
  3. Addition of the Transient Voltage Suppressor (TVS) diodes to clamp the positive transient spike at the input.
  4. Using Schottky diodes across the output to absorb negative spikes.

  Refer to *TVS Clamping in Hot-Swap Circuits* and *Selecting TVS Diodes in Hot-Swap and ORing Applications* for details on selecting an appropriate TVS diode and the number of TVS diodes to be in parallel to effectively clamp the positive transients at the input below the absolute maximum ratings of the IN pin (90V). These TVS diodes also help to limit the transient voltage at the IN pin during the Hot Plug event. 2, SMDJ54A are used in parallel in this design example.

Copyright © 2026 Texas Instruments Incorporated

Note

Maximum Clamping Voltage V_C specification of the selected TVS diode at I_{pp} (10/1000µs) (V) must be lower than the absolute maximum rating of the power input (IN) pin for safe operation of the eFuse.

Selection of the Schottky diodes must be based on the following criteria:

– The non-repetitive peak forward surge current (I_{FSM}) of the selected diode must be more than the fast-trip threshold. Two or more Schottky diodes in parallel must be used if one Schottky diode is unable to meet the required I_{FSM} rating. Equation 29 calculates the number of Schottky diodes ($N_{Schottky}$) that must be used in parallel.

$$N_{Schottky} > \frac{I_{SFT}}{I_{FSM}} \tag{29}$$

– Forward Voltage Drop (V_F) at near to I_{FSM} must be as small as possible. Ideally, the negative transient voltage at the OUT pin must be clamped within the absolute maximum rating of the OUT pin (-5V).
– DC Blocking Voltage (V_{RM}) must be more than the maximum input operating voltage.
– Leakage current (I_R) must be as small as possible.

2, B360-13F are used in parallel in this design example.

- **Selecting C_{IN} and C_{OUT}**

  TI recommends to add ceramic bypass capacitors to help stabilize the voltages on the input and output. The value of C_{IN} must be kept small to minimize the current spike during hot-plug events. For each device, 10nF of C_{IN} is a reasonable target. Because C_{OUT} does not get charged during hot-plug, a larger value such as 10µF can be used at the OUT pin of each device.
- **Load turn-ON sequence**

  Starting up into large capacitive loads combined with active load current can increase inrush and can lead to thermal shutdown during startup. To minimize this risk, TI recommends using the PGOOD signal to enable downstream loads. This sequencing allows the eFuse to charge the capacitive load first before connecting the active load, ensuring a smooth and reliable startup.

Copyright © 2026 Texas Instruments Incorporated

8.2.3 Application Performance Plots

All the waveforms below are captured on an evaluation setup with one (1) TPS1689x eFuse and one(1) TPS1685x eFuse in parallel. All the pullup supplies are derived from a separate standby rail.

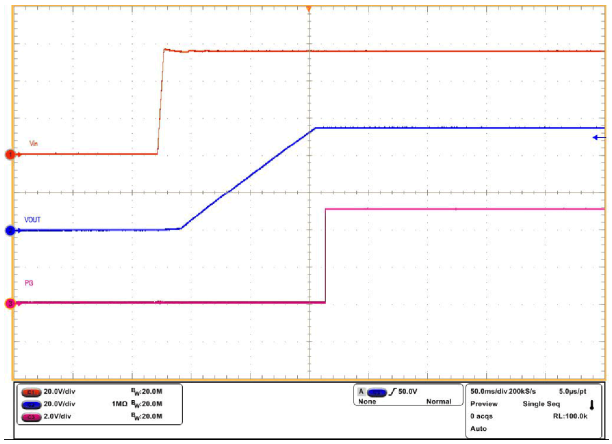

Figure 8-6. VIN Ramped From 0V to 54V

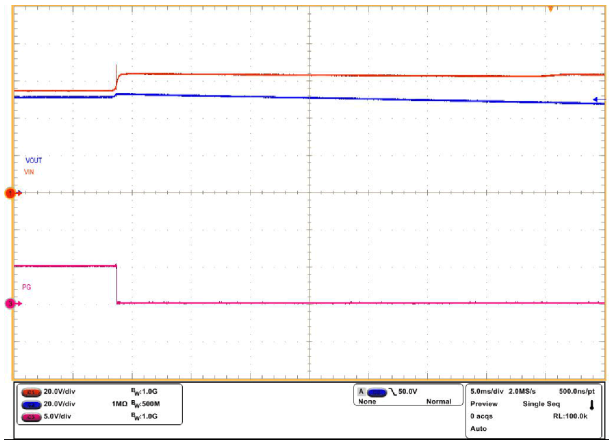

Figure 8-7. Overvoltage Protection

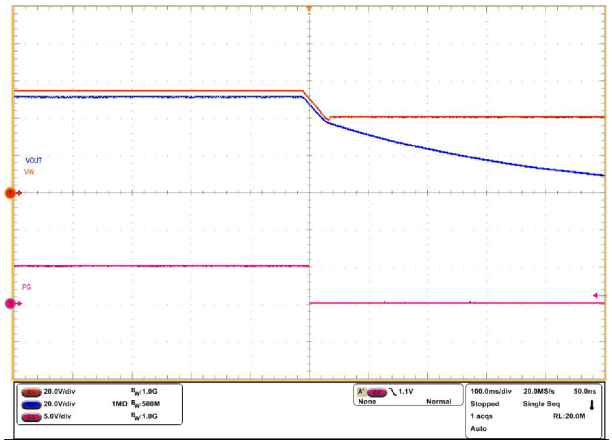

Figure 8-8. Undervoltage Protection

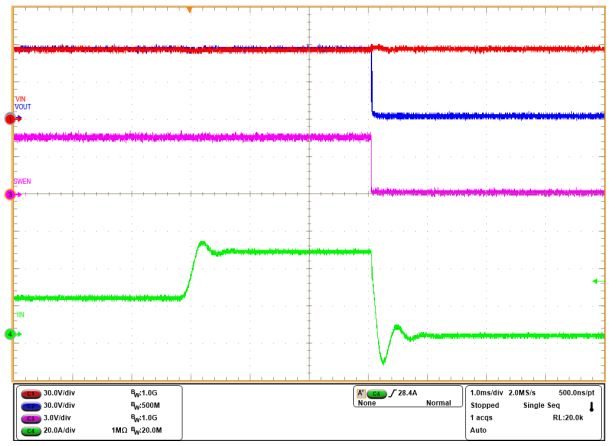

Figure 8-9. Overcurrent Protection

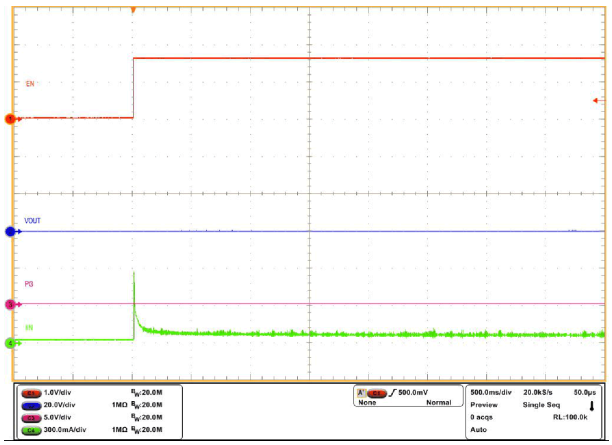

Figure 8-10. Power Up Into Short: VIN = 54V, EN/ UVLO Stepped Up From 0V to 3V

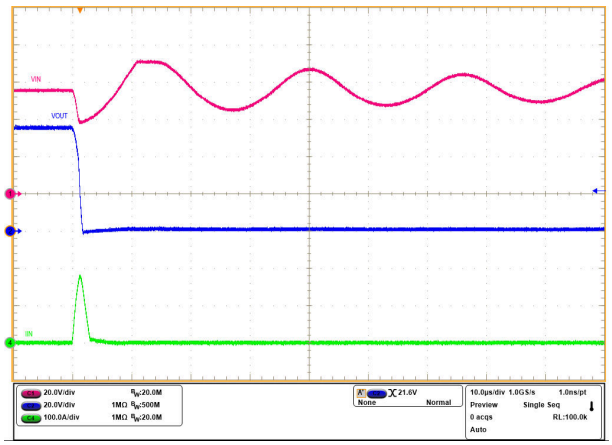

Figure 8-11. Output Hot-Short Response

Copyright © 2026 Texas Instruments Incorporated

8.3 Power Supply Recommendations

The TPS1689x devices are designed for a supply voltage in the range from 9V to 80V on the IN pin and from 9V to 80V on the VDD pin. TI recommends using a minimum capacitance of 10nF on the IN pin of each device in parallel chain to avoid coupling of high slew rates during hot plug events. TI also recommends using an R-C filter from the IN supply to the VDD pin to filter out supply noise and to hold up the controller supply during severe faults such as short-circuit.

Note

1. If in-system programming of configuration register nonvolatile memory is needed, then TI recommends using a minimum supply of 10V on VDD.

8.3.1 Transient Protection and Other Design Considerations

In the case of a short-circuit or circuit-breaker event, when the device interrupts current flow, the input inductance generates a positive voltage spike on the input, and the output inductance generates a negative voltage spike on the output. The peak amplitude of voltage spikes (transients) depends on the value of inductance in series to the input or output of the device. Such transients can exceed the absolute maximum ratings of the device if steps are not taken to address the issue. Typical methods for addressing transients include:

- Minimize lead length and inductance into and out of the device.
- Use a large PCB GND plane.
- Connect a Schottky diode from the OUT pin ground to absorb negative spikes.
- Connect a low ESR capacitor of 10µF or higher at the OUT pin very close to the device.
- Connect a ceramic capacitor C_{IN} = 10nF or higher at the IN pin very close to the device to dampen the rise time of input transients. The capacitor voltage rating must be at least twice the input supply voltage to be able to withstand the positive voltage excursion during inductive ringing.

The approximate value of input capacitance can be estimated with Equation 30.

$$V_{SPIKE(Absolute)} = V_{IN} + I_{LOAD} \times \sqrt{\frac{L_{IN}}{C_{IN}}} \tag{30}$$

V_{IN} is the nominal supply voltage.

I_{LOAD} is the load current.

L_{IN} equals the effective inductance seen looking into the source.

C_{IN} is the capacitance present at the input.

- Some applications can require the addition of a Transient Voltage Suppressor (TVS) to prevent transients from exceeding the absolute maximum ratings of the device. In some cases, even if the maximum amplitude of the transients is below the absolute maximum rating of the device, a TVS can help to absorb the excessive energy dump and prevent it from creating very fast transient voltages on the input supply pin of the IC, which can couple to the internal control circuits and cause unexpected behavior.
- A small decoupling capacitor can connect across the EN/UVLO pin to GND when this pin is tied to the input through a resistor divider. This helps avoid false eFuse trips caused by transients on the power line.
- When EN/UVLO is High and SWEN is Low, a small voltage can build up at the output depending on the output impedance. This residual voltage can be minimized by adding an optional bleeder resistor (for example, 10kΩ) across the output.

The circuit implementation with optional protection components is shown in Figure 8-12.

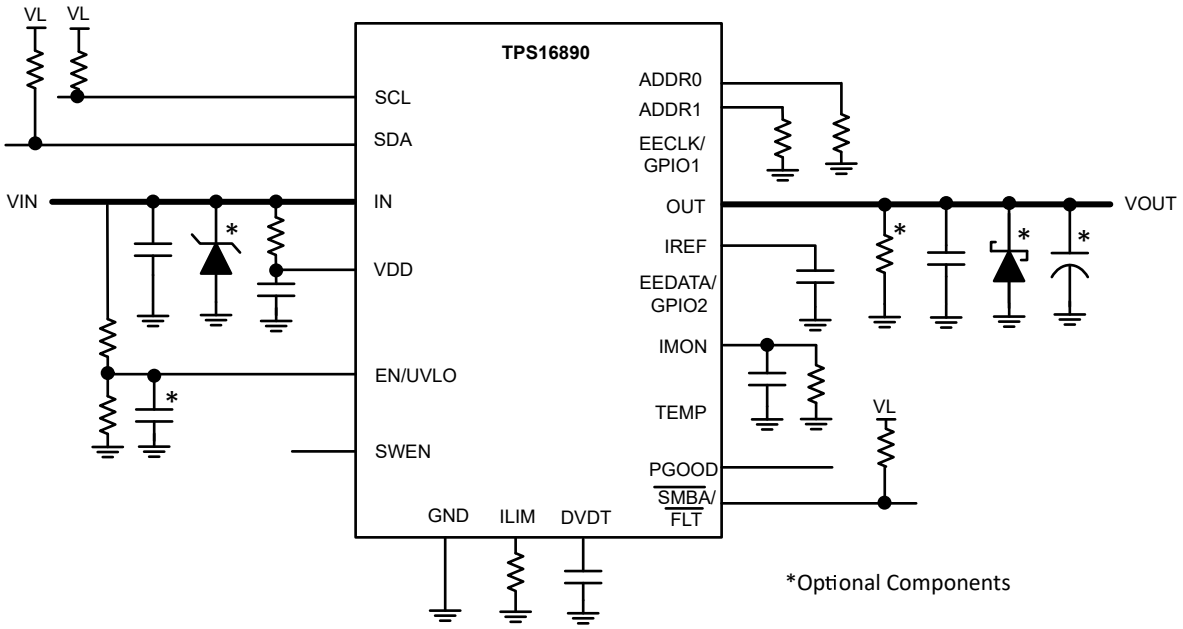

Figure 8-12. Circuit Implementation with Optional Protection Components

8.3.2 Output Short-Circuit Measurements

It is difficult to obtain repeatable and similar short-circuit testing results. The following contribute to variation in results:

- Source bypassing
- Input leads
- Circuit layout
- Component selection
- Output shorting method
- Relative location of the short
- Instrumentation

The actual short exhibits a certain degree of randomness because it microscopically bounces and arcs. Confirm that configuration and methods are used to obtain realistic results. Do not expect to see waveforms exactly like the waveforms in this datasheet because every setup is different.

8.4 Layout

8.4.1 Layout Guidelines

- For all applications, TI recommends a ceramic decoupling capacitor of 10nF or greater between the IN terminal and GND terminal.
- For all applications, TI recommends a ceramic decoupling capacitor of 10µF or greater between the OUT terminal and GND terminal.
- The best placement of the decoupling capacitor is closest to the IN and GND terminals of the device. Take care to minimize the loop area formed by the bypass-capacitor connection, the IN terminal, and the GND terminal of the IC. See Figure below for a PCB layout example.
- High current-carrying power-path connections must be as short as possible and must be sized to carry at least twice the full-load current.
- The GND terminal must be tied to the PCB ground plane at the terminal of the IC. The PCB ground must be a copper plane or island on the board.
- The IN and OUT pins are used for Heat Dissipation. Connect to as much copper area as possible with thermal vias.
- Locate the following support components close to the connection pins:
  - C_{IN}

Copyright © 2026 Texas Instruments Incorporated

  - C_{OUT}
  - C_{VDD}
  - C_{TEMP}
  - R_{ILIM}
  - R_{IMON}
  - C_{IREF}
  - C_{DVDT}
  - Resistors for the EN/UVLO pin
  - Resistors for the ADDR0, ADDR1 pins
- Connect the other end of the component to the GND pin of the device with shortest trace length. The trace routing for the ADDR0, ADDR1, C_{IN}, C_{OUT}, C_{VDD}, C_{IREF}, R_{ILIM}, R_{IMON}, C_{TEMP} and C_{DVDT} components to the device must be as short as possible to reduce parasitic effects on the current limit and soft-start timing. These traces must not have any coupling to switching signals on the board.
- Because the IMON, ILIM and IREF pins directly control the overcurrent protection behavior of the device, the PCB routing of these nodes must be kept away from any noisy (switching) signals.
- TI recommends to keep the parasitic loading on SWEN pin to a minimum to avoid synchronization issues.
- Protection devices such as TVS, snubbers, capacitors, or diodes must be placed physically close to the device that the device is intended to protect. These protection devices must be routed with short traces to reduce inductance. For example, TI recommends a protection Schottky diode to address negative transients due to switching of inductive loads, and it must be physically close to the OUT pins.

Copyright © 2026 Texas Instruments Incorporated

8.4.2 Layout Example

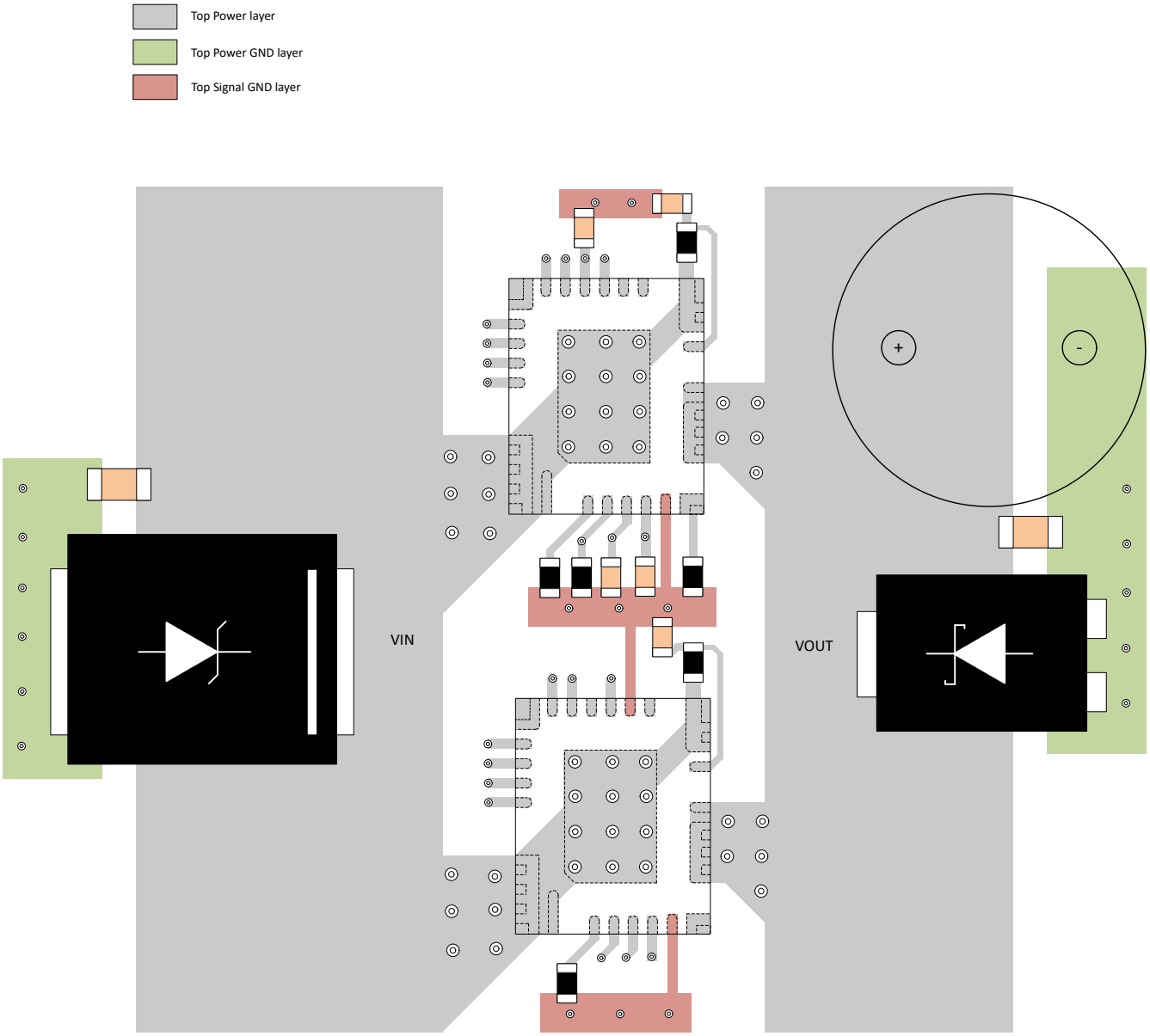

Copyright © 2026 Texas Instruments Incorporated

9 Device and Documentation Support

TI offers an extensive line of development tools. Tools and software to evaluate the performance of the device, generate code, and develop solutions are listed below.

9.1 Third-Party Products Disclaimer

TI'S PUBLICATION OF INFORMATION REGARDING THIRD-PARTY PRODUCTS OR SERVICES DOES NOT CONSTITUTE AN ENDORSEMENT REGARDING THE SUITABILITY OF SUCH PRODUCTS OR SERVICES OR A WARRANTY, REPRESENTATION OR ENDORSEMENT OF SUCH PRODUCTS OR SERVICES, EITHER ALONE OR IN COMBINATION WITH ANY TI PRODUCT OR SERVICE.

9.2 Documentation Support

9.2.1 Related Documentation

For related documentation see the following:

- Texas Instruments, *TPS1689EVM eFuse Evaluation Board*
- Texas Instruments, TPS1689x Design Calculator

9.3 Receiving Notification of Documentation Updates

To receive notification of documentation updates, navigate to the device product folder on ti.com. Click on *Notifications* to register and receive a weekly digest of any product information that has changed. For change details, review the revision history included in any revised document.

9.4 Support Resources

TI E2E™ support forums are an engineer's go-to source for fast, verified answers and design help — straight from the experts. Search existing answers or ask your own question to get the quick design help you need.

Linked content is provided "AS IS" by the respective contributors. They do not constitute TI specifications and do not necessarily reflect TI's views; see TI's Terms of Use.

9.5 Trademarks

SMBus™ is a trademark of Intel.
TI E2E™ is a trademark of Texas Instruments.
PMBus® is a registered trademark of SMIF.
Intel® is a registered trademark of Intel.
is a registered trademark of SMIF, Inc.
All trademarks are the property of their respective owners.

9.6 Electrostatic Discharge Caution

This integrated circuit can be damaged by ESD. Texas Instruments recommends that all integrated circuits be handled with appropriate precautions. Failure to observe proper handling and installation procedures can cause damage.

ESD damage can range from subtle performance degradation to complete device failure. Precision integrated circuits may be more susceptible to damage because very small parametric changes could cause the device not to meet its published specifications.

9.7 Glossary

TI Glossary	This glossary lists and explains terms, acronyms, and definitions.

10 Revision History

NOTE: Page numbers for previous revisions may differ from page numbers in the current version.

Changes from Revision A (December 2025) to Revision B (October 2026)	Page
• Updated device comparison table	3

Changes from Revision * (March 2025) to Revision A (December 2025)	Page
• Changed status from Advance Information to Production Data	1

11 Mechanical, Packaging, and Orderable Information

The following pages include mechanical, packaging, and orderable information. This information is the most current data available for the designated devices. This data is subject to change without notice and revision of this document. For browser-based versions of this data sheet, refer to the left-hand navigation.

Copyright © 2026 Texas Instruments Incorporated

PACKAGING INFORMATION

Orderable part number	Status (1)	Material type (2)	Package | Pins	Package qty | Carrier	RoHS (3)	Lead finish/ Ball material (4)	MSL rating/ Peak reflow (5)	Op temp (°C)	Part marking (6)
TPS16890AVMAR	Active	Production	LQFN-CLIP (VMA) | 23	2500 | LARGE T&R	ROHS Exempt	NIPDAU	Level-2-260C-1 YEAR	-	TPS1689A
TPS16890BVMAR	Active	Production	LQFN-CLIP (VMA) | 23	2500 | LARGE T&R	ROHS Exempt	NIPDAU	Level-2-260C-1 YEAR	-	TPS1689B
TPS16890VMAR	Active	Production	LQFN-CLIP (VMA) | 23	2500 | LARGE T&R	ROHS Exempt	NIPDAU	Level-2-260C-1 YEAR	-40 to 125	TPS16890

(1) **Status:** For more details on status, see our product life cycle.

(2) **Material type:** When designated, preproduction parts are prototypes/experimental devices, and are not yet approved or released for full production. Testing and final process, including without limitation quality assurance, reliability performance testing, and/or process qualification, may not yet be complete, and this item is subject to further changes or possible discontinuation. If available for ordering, purchases will be subject to an additional waiver at checkout, and are intended for early internal evaluation purposes only. These items are sold without warranties of any kind.

(3) **RoHS values:** Yes, No, RoHS Exempt. See the TI RoHS Statement for additional information and value definition.

(4) **Lead finish/Ball material:** Parts may have multiple material finish options. Finish options are separated by a vertical ruled line. Lead finish/Ball material values may wrap to two lines if the finish value exceeds the maximum column width.

(5) **MSL rating/Peak reflow:** The moisture sensitivity level ratings and peak solder (reflow) temperatures. In the event that a part has multiple moisture sensitivity ratings, only the lowest level per JEDEC standards is shown. Refer to the shipping label for the actual reflow temperature that will be used to mount the part to the printed circuit board.

(6) **Part marking:** There may be an additional marking, which relates to the logo, the lot trace code information, or the environmental category of the part.

Multiple part markings will be inside parentheses. Only one part marking contained in parentheses and separated by a "~" will appear on a part. If a line is indented then it is a continuation of the previous line and the two combined represent the entire part marking for that device.

Important Information and Disclaimer: The information provided on this page represents TI's knowledge and belief as of the date that it is provided. TI bases its knowledge and belief on information provided by third parties, and makes no representation or warranty as to the accuracy of such information. Efforts are underway to better integrate information from third parties. TI has taken and continues to take reasonable steps to provide representative and accurate information but may not have conducted destructive testing or chemical analysis on incoming materials and chemicals. TI and TI suppliers consider certain information to be proprietary, and thus CAS numbers and other limited information may not be available for release.

In no event shall TI's liability arising out of such information exceed the total purchase price of the TI part(s) at issue in this document sold by TI to Customer on an annual basis.

TAPE AND REEL INFORMATION

REEL DIMENSIONS

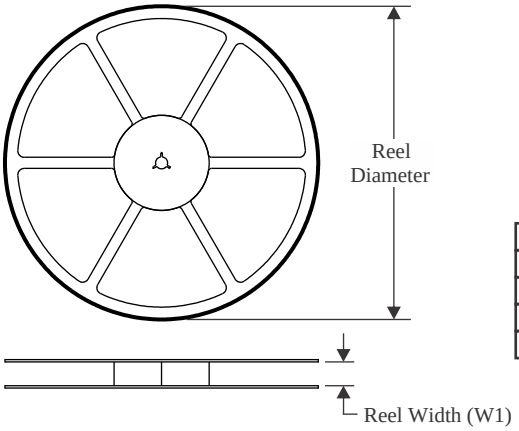

TAPE DIMENSIONS

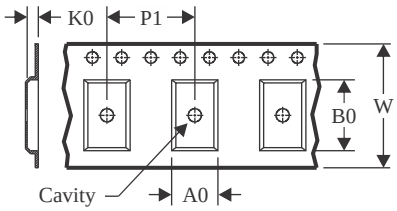

A0	Dimension designed to accommodate the component width
B0	Dimension designed to accommodate the component length
K0	Dimension designed to accommodate the component thickness
W	Overall width of the carrier tape
P1	Pitch between successive cavity centers

QUADRANT ASSIGNMENTS FOR PIN 1 ORIENTATION IN TAPE

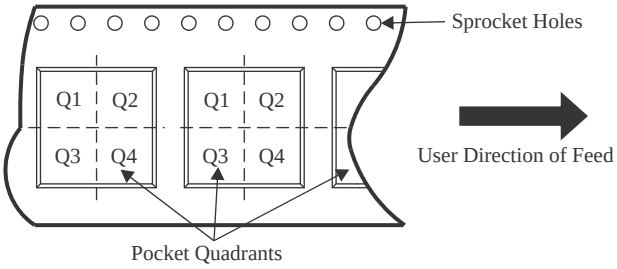

*All dimensions are nominal

Device	Package Type	Package Drawing	Pins	SPQ	Reel Diameter (mm)	Reel Width W1 (mm)	A0 (mm)	B0 (mm)	K0 (mm)	P1 (mm)	W (mm)	Pin1 Quadrant
TPS16890AVMAR	LQFN-CLIP	VMA	23	2500	330.0	16.4	6.3	5.3	1.75	8.0	16.0	Q1
TPS16890BVMAR	LQFN-CLIP	VMA	23	2500	330.0	16.4	6.3	5.3	1.75	8.0	16.0	Q1
TPS16890VMAR	LQFN-CLIP	VMA	23	2500	330.0	16.4	6.3	5.3	1.75	8.0	16.0	Q1

TAPE AND REEL BOX DIMENSIONS

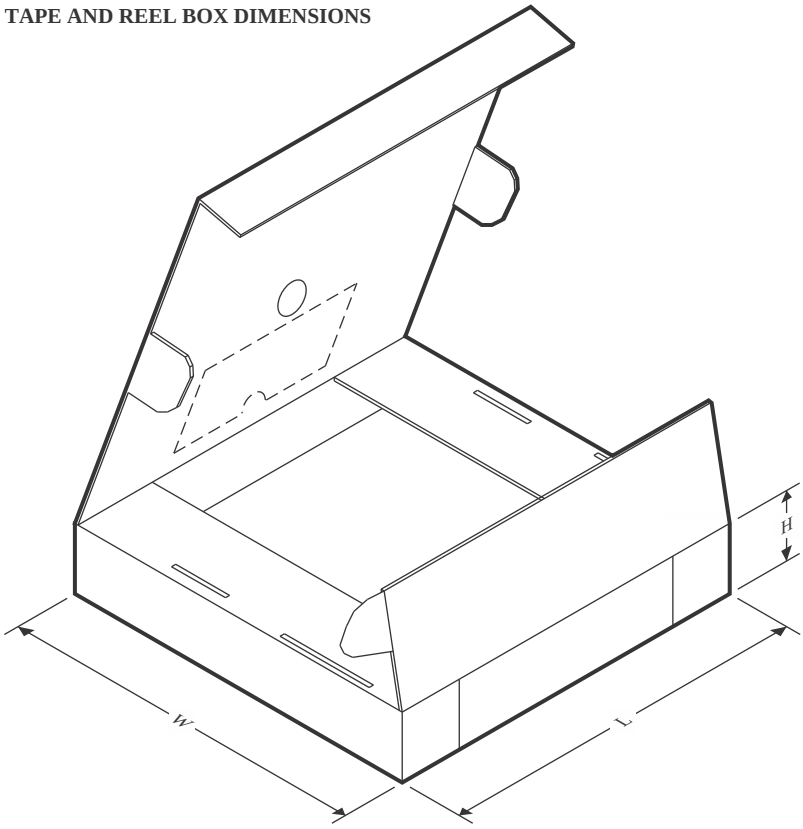

*All dimensions are nominal

Device	Package Type	Package Drawing	Pins	SPQ	Length (mm)	Width (mm)	Height (mm)
TPS16890AVMAR	LQFN-CLIP	VMA	23	2500	367.0	367.0	38.0
TPS16890BVMAR	LQFN-CLIP	VMA	23	2500	367.0	367.0	38.0
TPS16890VMAR	LQFN-CLIP	VMA	23	2500	367.0	367.0	38.0

PACKAGE OUTLINE

VMA0023A

LQFN-CLIP - 1.5 mm max height

PLASTIC QUAD FLATPACK - NO LEAD

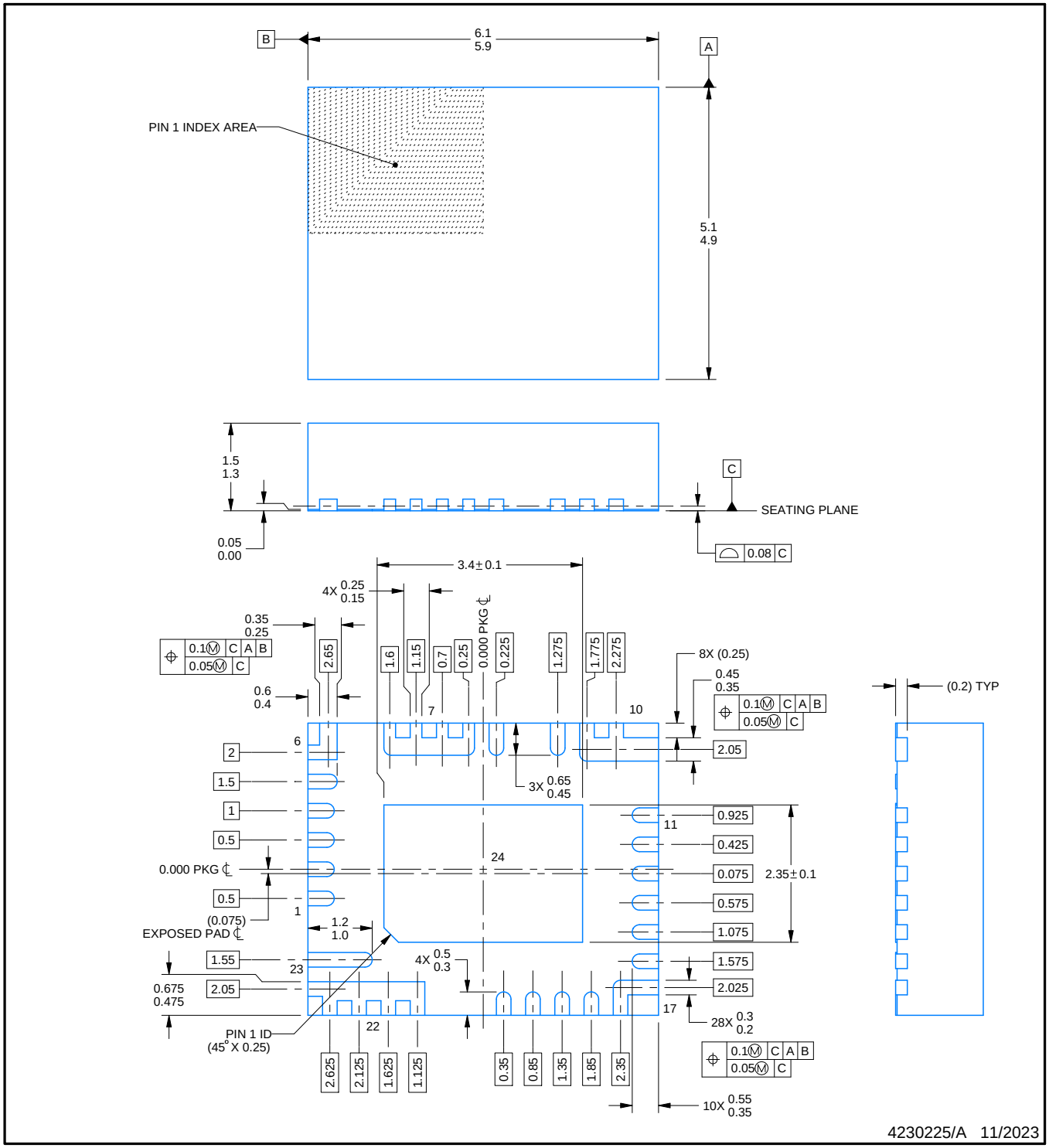

NOTES:

1. All linear dimensions are in millimeters. Any dimensions in parenthesis are for reference only. Dimensioning and tolerancing per ASME Y14.5M.
2. This drawing is subject to change without notice.
3. The package thermal pad must be soldered to the printed circuit board for thermal and mechanical performance.

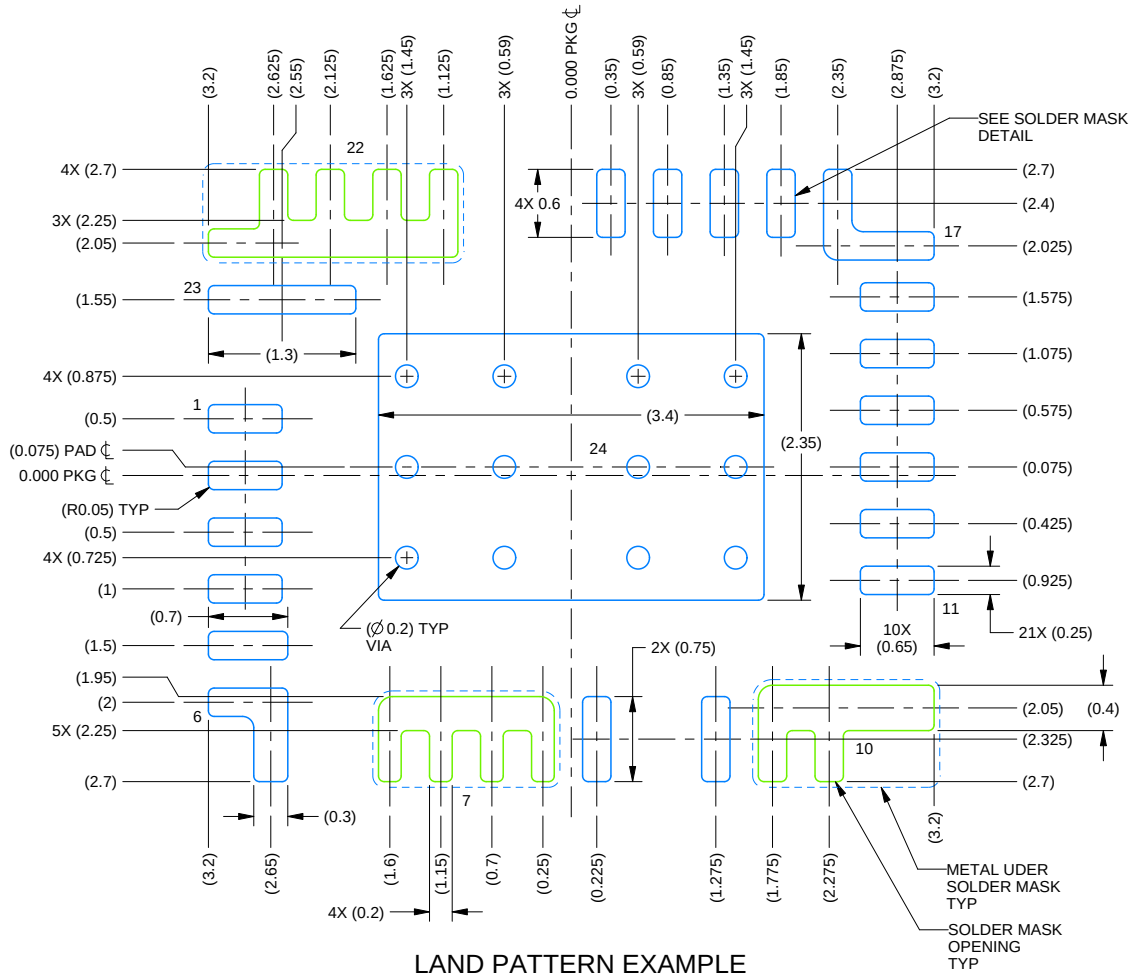

LAND PATTERN EXAMPLE
EXPOSED METAL SHOWN
SCALE: 15X

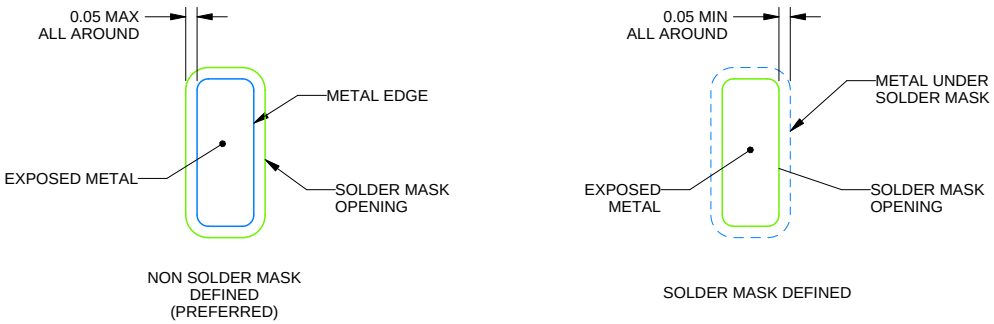

NON SOLDER MASK DEFINED (PREFERRED)

SOLDER MASK DEFINED

SOLDER MASK DETAILS

NOTES: (continued)

4. This package is designed to be soldered to a thermal pad on the board. For more information, see Texas Instruments literature number SLUA271 (www.ti.com/lit/slua271).
5. Vias are optional depending on application, refer to device data sheet. If any vias are implemented, refer to their locations shown on this view. It is recommended that vias under paste be filled, plugged or tented.

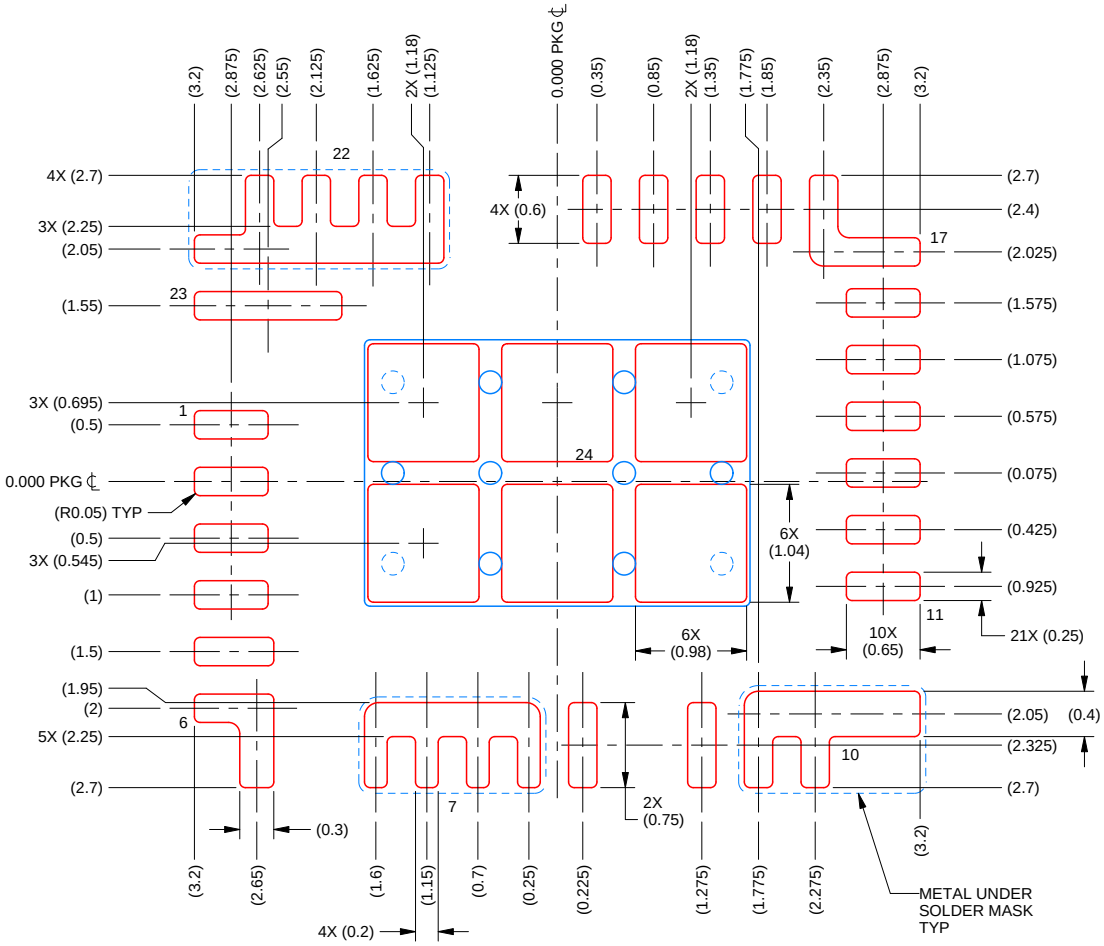

SOLDER PASTE EXAMPLE
BASED ON 0.125 MM THICK STENCIL
SCALE: 15X

EXPOSED PAD 28
76% PRINTED SOLDER COVERAGE BY AREA UNDER PACKAGE

4230225/A 11/2023

NOTES: (continued)

6. Laser cutting apertures with trapezoidal walls and rounded corners may offer better paste release. IPC-7525 may have alternate design recommendations.

IMPORTANT NOTICE AND DISCLAIMER

TI PROVIDES TECHNICAL AND RELIABILITY DATA (INCLUDING DATASHEETS), DESIGN RESOURCES (INCLUDING REFERENCE DESIGNS), APPLICATION OR OTHER DESIGN ADVICE, WEB TOOLS, SAFETY INFORMATION, AND OTHER RESOURCES “AS IS” AND WITH ALL FAULTS, AND DISCLAIMS ALL WARRANTIES, EXPRESS AND IMPLIED, INCLUDING WITHOUT LIMITATION ANY IMPLIED WARRANTIES OF MERCHANTABILITY, FITNESS FOR A PARTICULAR PURPOSE OR NON-INFRINGEMENT OF THIRD PARTY INTELLECTUAL PROPERTY RIGHTS.

These resources are intended for skilled developers designing with TI products. You are solely responsible for (1) selecting the appropriate TI products for your application, (2) designing, validating and testing your application, and (3) ensuring your application meets applicable standards, and any other safety, security, regulatory or other requirements.

These resources are subject to change without notice. TI grants you permission to use these resources only for development of an application that uses the TI products described in the resource. Other reproduction and display of these resources is prohibited. No license is granted to any other TI intellectual property right or to any third party intellectual property right. TI disclaims responsibility for, and you fully indemnify TI and its representatives against any claims, damages, costs, losses, and liabilities arising out of your use of these resources.

TI’s products are provided subject to TI’s Terms of Sale, TI’s General Quality Guidelines, or other applicable terms available either on ti.com or provided in conjunction with such TI products. TI’s provision of these resources does not expand or otherwise alter TI’s applicable warranties or warranty disclaimers for TI products. Unless TI explicitly designates a product as custom or customer-specified, TI products are standard, catalog, general purpose devices.

TI objects to and rejects any additional or different terms you may propose.

Copyright © 2026, Texas Instruments Incorporated

Last updated 10/2025