EVM User's Guide: BQ25692EVM BQ25692-Q1EVM

BQ25692-Q1 Evaluation Module

Description

The BQ2569X/9X-Q1 evaluation module (EVM) is used to evaluate the BQ2569X/9X-Q1 integrated circuit.

Get Started

1. Order the EVM on ti.com.
2. If using BQSTUDIO, order the EV2400 or EV2500 box to communicate with the EVM. A USB-A to USB-C cable is not provide but is required to connect the EV2500 to the PC.
3. If using BQSTUDIO, search for the at e2e.ti.com and download into the / BatteryManagementStudio/config directory.
4. If using online TI-CHARGER-GUI , order the USB2ANY box to communicate with the EVM.

Features

- Screw terminal blocks allow for easy connection to bench power supplies and electronic load or resistive loads as well as simulated or real batteries
- Onboard jumpers with removable shunts facilitate default configuration and simulated operation
- Onboard test points and sense resistors facilitate measurement of high-efficiency and high-accuracy voltage and current regulation
- Connector for EV2400 or EV2500 communication box/board for use with BQSTUDIO downloadable software
- Connector for USB2ANY communication box for use with TI-CHARGER-GUI

Applications

- Video doorbell
- Smart home remote control
- Data concentrators
- Wireless speaker
- Appliances
- Smart speaker
- Multiparameter patient monitor
- Electrocardiogram (ECG)
- Ultrasound smart probe

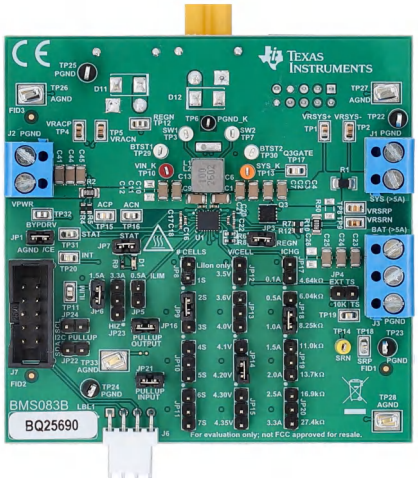

BQ2569X/9X-Q1EVM Hardware Board

Copyright © 2026 Texas Instruments Incorporated

1 Evaluation Module Overview

1.1 Introduction

The BMS083 printed circuit board (PCB) is a complete charger evaluation module for the BQ2569X/9X-Q1 family of battery chargers. The BQ2569X/9X-Q1 is an integrated switched-mode buck-boost battery charge management device in HOTROD (QFN) package, intended for charging 1-series to 7-series cell Li chemistry batteries with up to 3.3A charge current. In forward/charge/sink mode, the IC operates from 2.5V to 34V input voltage and withstands up to 45V. The default charge voltage and current are set using resistors. The device defaults to forward/charge/sink mode but can be changed using I2C to reverse/OTG/source mode. The BQ25692-Q1 also allows forward/reverse bypass (pass through) mode using the I2C registers. In addition, the I2C registers can change the switching frequency as well as the voltage and current regulation settings.

This user's guide provides detailed testing instructions for the BQ2569X/9X-Q1 evaluation modules (EVMs). Also included are descriptions of the necessary equipment, equipment setup, and procedures. The reference documentation contains the PCB layouts, schematics, and the bill of materials (BOM).

Throughout this user's guide, the abbreviations *EVM*, *BQ2569X/9X-Q1EVM*, *BMS083*, and the term *evaluation module* are synonymous with the BMS083 evaluation module, unless otherwise noted.

	Caution	**Caution: Hot surface.** **Contact can cause burns.** **Do not touch!**

1.2 Kit Contents

The kit includes the following:

- 1 BQ25692-Q1EVM

1.3 Specifications

Table 1-1 lists the recommended operating conditions for this EVM.

Table 1-1. Recommended Operating Conditions

Symbol	Description	Min	Typ	Max	Unit
V_{VIN}	Input voltage applied to VIN pin	2.9		34.0	V
V_{BAT}	Battery voltage applied to BAT pin			34.0	V
I_{VIN}	Input current into VIN			3.3	A
I_{OUT}	Converter output current from SW flowing to load and battery			3.3	A

1.4 Device Information

This EVM kit does not include the EV2400 or EV2500 or USB2ANY. To evaluate the EVM with BQSTUDIO, an EV2400 or EV2500 must be ordered separately to evaluate the EVM with the downloaded BQSTUDIO software. To evaluate the EVM with online TI-CHARGER-GUI, a USB2ANY box must be ordered separately to evaluate the EVM through the online TI-CHARGER-GUI website.

For detailed features and operation, see Table 1-2 for a list of devices and the corresponding datasheets.

Table 1-2. Device Data Sheets

Device	Data Sheet	EVM Label
BQ25692-Q1	SLUSG51	BQ25692-Q1EVM

Copyright © 2026 Texas Instruments Incorporated

2 Hardware

2.1 I/O Information

Table 2-1 lists the input and output connections available on this EVM and their respective descriptions.

Table 2-1. EVM I/O Connections

Jack	Description
J1(1) - SYS	Positive rail of the charger system output voltage, typically connected to the system load
J1(2) - GND	Ground
J2(1) - VPWR	Positive rail of the charger input voltage
J2(2) - GND	Ground
J3(1) - BAT+	Positive rail of the charger battery input, connected to the positive terminal of the external battery
J3(2) - TS	Connection available for external thermistor if required
J3(3) - GND	Ground
J4	For test purposes only - do not use. IC pin voltages are at the different vias of this uninstalled header.
J5	Power connection to USB-C PD EVM
J6	I^2C connector for the EV2400 or EV2500 interface board
J7	I^2C connector for the USB2ANY interface board
J8	Data connection to USB-C PD EVM
J9	Not used
J10	Power connection to USB-C PD EVM

2.2 Jumper Information

Table 2-2 lists the jumper and shunt installations available on this EVM and their respective descriptions.

Table 2-2. EVM Jumper and Shunt Installation

Jumper	Description	BQ25690 Default Shunt Setting
JP1	$\overline{CE}$ pin connection to ground to enable charging. When removed, $\overline{CE}$ pin will pull up to disable charge	Installed
JP2	Not used	Not Used
JP3	REGN to TS resistor divider network connection. This must remain connected to prevent TS fault.	Installed
JP4	Thermistor NORMAL temperature setting. Connect jumper to simulate charger entering TNORMAL (T2-T3) temperature region. Remove this jumper whenever using an externally connected thermistor.	Installed
JP5	ILIM_HIZ pin setting for 500mA. Connect to set the external input current limit setting to 500mA.	Not Installed
JP6	ILIM_HIZ pin setting for 1.5A. Install shunt to set the external input current limit setting to 1.5A.	Installed
JP7	STAT pin LED indicator connection. This indicates the current charger Status. LED on = charge in progress. LED off = charge terminated. LED blinking= charge fault.	Installed
JP8	CELL pin setting for 1S, VSYSMIN = 3.5V. Connect to configure charger default setting to 1S charge.	Not Installed
JP9(1,2)	CELL pin setting for 2S, VSYSMIN = 6.2V. Connect to configure charger default setting to 2S charge.	Installed
JP9(2,3)	CELL pin setting for 3S, VSYSMIN = 9.3V. Connect to configure charger default setting to 3S charge.	Not Installed
JP10(1,2)	CELL pin setting for 4S, VSYSMIN = 12.4V. Connect to configure charger default setting to 4S charge.	Not Installed
JP10(2,3)	CELL pin setting for 5S, VSYSMIN = 15.5V. Connect to configure charger default setting to 5S charge.	Not Installed
JP11(1,2)	CELL pin setting for 6S, VSYSMIN = 18.6V. Connect to configure charger default setting to 6S charge.	Not Installed

Copyright © 2026 Texas Instruments Incorporated

Table 2-2. EVM Jumper and Shunt Installation (continued)

Jumper	Description	BQ25690 Default Shunt Setting
JP11(2,3)	CELL pin setting for 7S, VSYSMIN = 18.6V. Connect to configure charger default setting to 7S charge.	Not Installed
JP12	VCHG pin setting for 3.5V/cell. Connect to configure charger default setting to 3.5V/cell	Not Installed
JP13(1,2)	VCHG pin setting for 3.6V/cell. Connect to configure charger default setting to 3.3V/cell	Not Installed
JP13(2,3)	VCHG pin setting for 4.0V/cell. Connect to configure charger default setting to 4.0V/cell	Not Installed
JP14(1,2)	VCHG pin setting for 4.1V/cell. Connect to configure charger default setting to 4.1V/cell	Not Installed
JP14(2,3)	VCHG pin setting for 4.2V/cell. Connect to configure charger default setting to 4.2V/cell.	Installed
JP15(1,2)	VCHG pin setting for 4.3V/cell. Connect to configure charger default setting to 4.3V/cell.	Not Installed
JP15(2,3)	VCHG pin setting for 4.35V/cell. Connect to configure charger default setting to 4.35V/cell.	Not Installed
JP16	3.3V LDO output connection to provide on-board PULLUP rail.	Installed
JP17	ICHG pin setting for ICHG = 0.1A, IPRECHG = 40mA, ITERM = 40mA . Connect to configure charger default setting to ICHG = 0.1A	Not Installed
JP18(1,2)	ICHG pin setting for ICHG = 0.5A, IPRECHG = 60mA, ITERM = 60mA . Connect to configure charger default setting to ICHG = 0.5A	Not Installed
JP18(2,3)	ICHG pin setting for ICHG = 1.0A, IPRECHG = 100mA, ITERM = 100mA . Connect to configure charger default setting to ICHG = 1.0A	Installed
JP19(1,2)	ICHG pin setting for ICHG = 1.5A, IPRECHG = 160mA, ITERM = 160mA . Connect to configure charger default setting to ICHG = 1.5A	Not Installed
JP19(2,3)	ICHG pin setting for ICHG = 2.0A, IPRECHG = 200mA, ITERM = 200mA . Connect to configure charger default setting to ICHG = 2.0A	Not Installed
JP20(1,2)	ICHG pin setting for ICHG = 2.5A, IPRECHG = 260mA, ITERM = 260mA . Connect to configure charger default setting to ICHG = 2.5A	Not Installed
JP20(2,3)	ICHG pin setting for ICHG = 3.3A, IPRECHG = 340mA, ITERM = 340mA . Connect to configure charger default setting to ICHG = 3.3A	Not Installed
JP21	Connect 3.3V LDO input is connected with diode-OR from VPWR and BAT.	Installed
JP22	I2C SDA connection to on-board 3.3V PULLUP rail.	Not Installed
JP23	Connect ILIM_HIZ pin to 3.3V PULLUP rail (pins 1 and 2) to place the charger into HIZ mode. Connect ILIM_HIZ pin to GND (pins 2 and 3) to set ILIM clamp on IINDPM register to 3.3A.	Not Installed
JP24	I2C SCL connection to on-board 3.3V PULLUP rail.	Not Installed

Copyright © 2026 Texas Instruments Incorporated

2.3 Equipment

This section includes a list of supplies required to perform tests on this EVM.

1. **Power Supplies:** Power Supply #1 (PS #1): A power supply capable of supplying no higher than 34V at 3.3A is required.
2. **Load #1 for simulating a battery:** Best option: 4-Quadrant Supply, voltage sourcing and sinking up to 34V and ±3.3A (or higher). A 1000uF capacitor connected in parallel is also recommended.
   Alternative Option: Up to 34V, at least 3.3A, DC electronic load set in a constant voltage loading mode. A second power supply connected by a diode in parallel with the electronic load can be needed to apply a start-up voltage less than simulated battery voltage.
3. **Load #2 for simulating a load on SYS or to connect to VPWR for a load in reverse/OTG/source mode:** Electronic or resistive load capable sinking at least 3.3A from up to 34V.
4. **Meters:** 4x "Fluke 75" multi-meters, (equivalent or better).
5. **Computer:** A Windows 10 or 11 based computer with at least one USB port and a USB cable. Must have the latest version of Battery Management Studio installed.
6. **USB Communication Kit:**EV2400 or EV2500 USB-based PC communication box or board OR USB2ANY communication box.
7. **Software:**If using EV2x00, BQSTUDIO software with latest .bqz file for the correct BQ2569X IC provided by Texas Instruments. Download and install BQSTUDIO from BQSTUDIO. If using USB2ANY, TI's online CHARGER-GUI can be accessed here.

Copyright © 2026 Texas Instruments Incorporated

2.4 Hardware Setup

Use the following list to set up the EVM testing equipment as shown in Figure 2-1.

1. Install or customize EVM jumper connections.
   a. Only one shunt must be installed for each group of headers: JP8-JP11, JP12-JP15, JP17-JP20 to set the default cell count, cell voltage and precharge, fast charge and termination current, respectively. The pins are read and register defaults set at POR from either VIN or battery or after ILIM_HIZ is pulled high. The cell count and voltage product sets the default battery regulation voltage and minimum system voltage.
2. Set PS #1 for 12V DC, 3A current limit and then turn off the supply.
3. Connect the output of PS#1 in series with a current meter to J2 (VPWR and PGND).
4. Connect a voltage meter across TP10 (VIN_K) and any AGND test point or across J2.
5. Turn on Load #1, set to constant voltage mode, and output to 5V. Disable Load.
6. Connect a voltage meter across TP15 and TP16 to measure the voltage across the ACx sense resistor. The measurement divided by the sense resistor gives IIN/IIN_REV input/output current.
7. Connect a voltage meter across TP14 (SRN) and any AGND test point or across the J3 connector to measure battery voltage.
8. Connect a voltage meter across TP8 and TP9 to measure the voltage across the SRx sense resistor. The measurement divided by the sense resistor gives battery current.
9. Connect the EV2x00 or USB2ANY communication box to the computer with the supplied USB cable and then to J6 or J7 respectively.

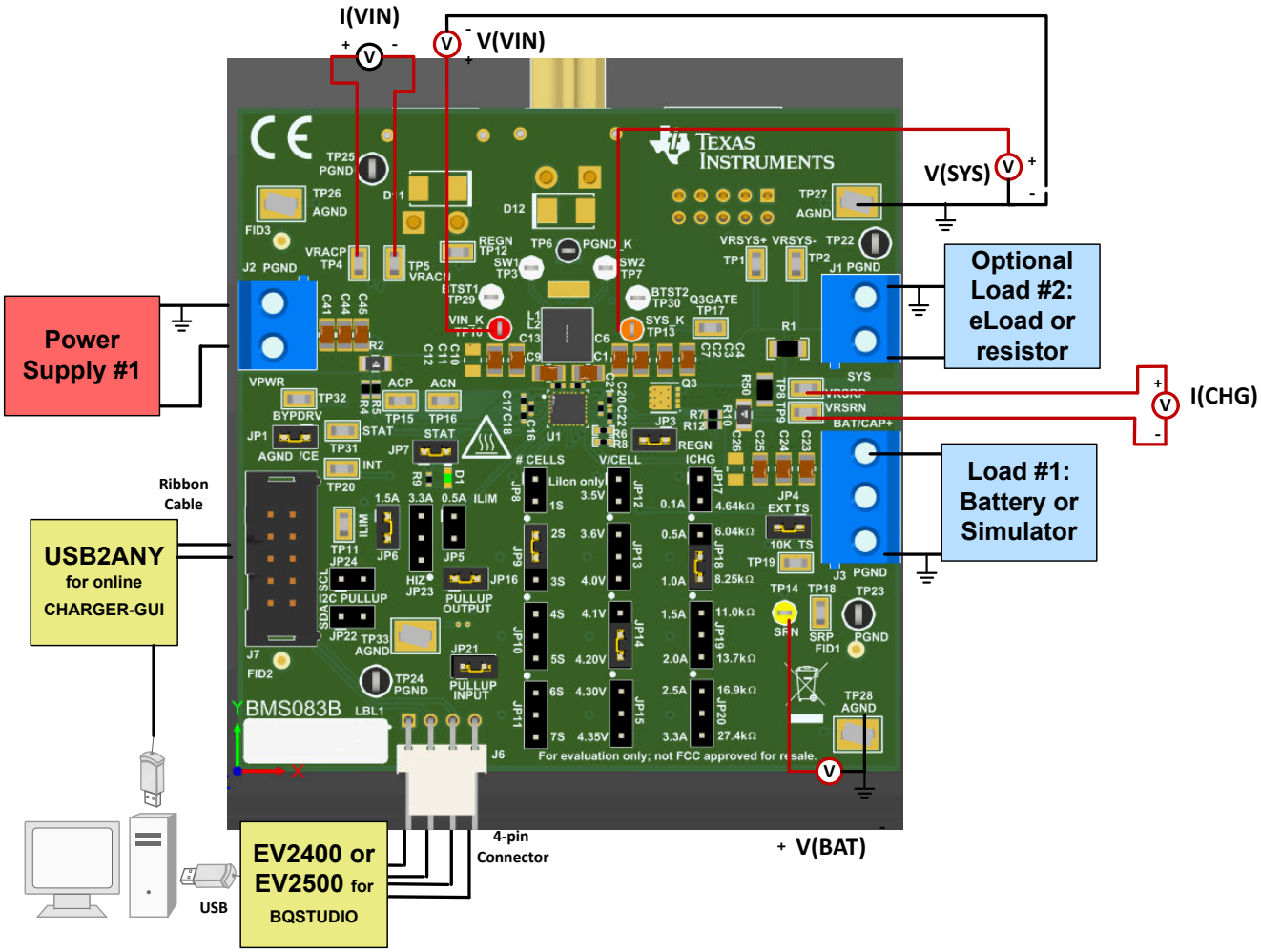

Figure 2-1. Test Setup for BQ25692-Q1EVM

Copyright © 2026 Texas Instruments Incorporated

3 Software

3.1 Software Setup

BQSTUDIO

If using BQSTUDIO and either the EV2400 or EV2500 communication box, use the following steps to set up the EVM testing software:

1. Connect the EV2400 or EV2500 to the PC with BQSTUDIO installed on it using the USB cable. If using the EV2500, the USB-A to USB-C cable is not included but is required to connect the EV2500 to the PC.
2. Connect the EV2400 or EV2500 to the EVM using the 4-pin Molex cable.
3. Launch BQSTUDIO and select "Charger" from the first splash screen.
4. On the second splash screen, select Charger_1_00-BQ25692-Q1 from the list of available BQZ files.
5. On the last screen, while you can use either the Default View tab or the Field View tab, the Field View gives a more concise view.

TI-CHARGER-GUI

If using TI-CHARGER-GUI and USB2ANY communication box, use the following steps to set up the EVM testing software:

1. Connect the USB2ANY box to the EVM using the 10-pin ribbon cable.
2. Launch TI-CHARGER-GUI from the website.
3. Either type in search box or scroll down to find BQ25692-Q1.
4. Find the page of interest using the icons on the left of the page:
   a. rocket - quick start with most common registers needed to start battery charging
   b. IC - entire chip level settings like EN_CHG, EN_REV, EN_HIZ, EN_PFM, etc
   c. plug - all forward/charge mode register settings
   d. lightning bolt - all reverse/OTG mode register settings
   e. bell - status and fault registers (fault registers clear after being read)

3.2 Test Procedure

3.2.1 Initial Power Up

Use the following steps for enabling the EVM test setup:

1. Verify that the steps in Section 2.4 have been followed.
2. Verify that the steps in Section 3.1 have been followed.
3. Turn on battery simulator Load #1 set to 5V.

3.2.2 I²C Register Setup

Use the following steps for bench test verification:

1. In the EVM software, click the Read or Read All Registers button.
   - Verify that the GUI does not report an ACK error.

   Note

   If the device reads an ACK error, verify Section 2.4 and Section 3.2.1 steps have been followed.
2. For forward/charge mode:

Action	BQSTUDIO (Field View)	TI-CHARGER-GUI
1. Disable watchdog timer to prevent registers reverting to defaults at timer expiration	8-bit tab Chip Multi-bit section	Quick Start (rocket icon) page or Chip Configuration (IC icon) page

Copyright © 2026 Texas Instruments Incorporated

Action	BQSTUDIO (Field View)	TI-CHARGER-GUI
2. To change default charge configuration per CELLS, VREG and ICHG pin resistors: a. Select the appropriate OVERRIDE bits b. Update CELLS bit if necessary c. Update VREG, VSYSMIN (BQ25690 only) and ICHG registers	a. 8-bit tab Forward Single-bit section b. 8-bit tab Forward Multi-bit section c. 16-bit tab Forward Multi-bit section	Forward/Charging Mode (plug icon) page
3. To change input current limit less than power source max current: a. Disable external ILIM_HIZ pin clamp using EN_EXTILIM bit b. Change IINDPM register	a. 8-bit tab Chip Single-bit section b. 16-bit tab Forward Multi-bit section	a. Quick Start or Forward/Charging Mode page b. Quick Start or Forward/Charging Mode page
4. Enable charging using EN_CHG bit - charge is enabled by default and /CE pin overrides CE bit	8-bit tab Chip Single-bit section	Quick Start or Chip configuration page or Forward/Charging Mode page

3. For reverse/OTG mode:

Action	BQSTUDIO (Field View)	TI-CHARGER-GUI
1. Disable watchdog timer to prevent registers reverting to defaults at timer expiration	8-bit tab Chip Multi-bit section	Quick Start (rocket icon) page or Chip configuration (IC icon) page
2. Change VIN_REV regulation voltage	16-bit tab Reverse Multi-bit section	Reverse/Backup/OTG configuration page (lighting bolt icon)
3. To disable ILIM_HIZ resistor clamp and set IIN_REV lower than 3.3A default a. Disable external ILIM_HIZ pin clamp by setting EN_EXTILIM=0 b. Change IIN_REV register	a. 8-bit tab Chip Single-bit section b. 16-bit tab Reverse Multi-bit section	Reverse/Backup/OTG configuration page
4. Enable reverse mode by a. First disabling battery detect by setting EN_BAT_DETECT=0 b. then setting EN_REV=1	8-bit tab Chip Single-bit section	Chip configuration page or Reverse/Backup/OTG configuration page

4. Status and fault flags are shown in the Flag and Status Single-bit sections on the 8-bit tab for BQSTUDIO and on the Chip Status and Faults page (bell icon) of TI-CHARGER-GUI.

3.2.3 Forward/Charge/Sink Mode Verification

Use the following steps for forward/charge mode verification with the EVM default settings per the ILIM_HIZ, CELLS, VCHG and ICHG pin resistors:

1. Turn on PS #1 set to 12V if not already on. In the EVM software, click Read/Read All registers twice. Verify that
   - All Fault and Status registers do not report any fault conditions.
   - PG_STAT reports Power Good
   - CHARGE_STAT reads Fast Charge
   - STAT LED is on and not flashing
2. To confirm pre-charge regulation, take DMM measurements as follows:
   - **Measure** → V(BAT) (SRN-TP14 and AGND) = 5V ±0.1V.
   - **Measure** → I(BAT) = 100mA ±50mA.

Copyright © 2026 Texas Instruments Incorporated

3. To confirm battery fast charge current regulation, increase Load #1 to 7.6V and take DMM measurements as follows:
   - **Measure** → V(BAT) (BAT-TP13 and AGND) = 7.6V ±0.1V.
   - **Measure** → I(BAT) = 1A ±100mA.
4. To confirm input current limit operation, in the EVM software, lower IINDPM current to 500mA and then take DMM measurement (or PS #1 measurement if accurate) as follows:
   - **Measure** → I(VIN) = 500mA ±200mA.
   - Verify that IINDPM_STAT register reports IINDPM Active

3.2.4 Reverse/OTG/Source Mode Verification

Use the following steps for reverse/OTG/source mode verification using the default VIN_REV:

1. Set Load #1, the battery simulator, to 7V and 2A current limit.

   Note

   If Load #1 connected from J3 BAT to GND is not a four quadrant supply, then remove Load #1 and replace with PS #1 set to 7V, 2A current limit.
2. In the EVM software, confirm that VIN_REV, the reverse mode regulation voltage, is set to 5000mV and IIN_REV, the reverse mode output current limit, is lowered from default 3300mA to 1000mA.
3. In the EVM software
   a. **Set EN_BAT_DETECT = 0**
   b. **Set EN_REV=1**
4. Connect disabled Load #2 across J2 VPWR and PGND
5. Set Load #2 to 500mA constant current load (or 10Ω constant resistance load) and the turn on the load.
6. To confirm the reverse regulation,
   - **Measure**→ V_{BUS} = 5.0V ± 155mV
7. Turn off and disconnect the power supply.
8. Remove Load #2 from the connection.

3.2.5 Helpful Tips

1. The leads and cables to the various power supplies, batteries, and loads have resistance. The current meters also have series resistance. The charger dynamically reduces charge current depending on the voltage sensed at the VIN pin (using the VINDPM feature), BAT pin (as part of normal termination), and TS pin (through the battery temperature monitoring feature through battery thermistor). Therefore, voltmeters must be used to measure the voltage as close to the IC pins as possible instead of relying on the digital readouts of the power supply. If a battery thermistor is not available, then ensure that the shunt for the 10kΩ resistor that simulates the NTC thermistor is in place.
2. When using a source meter that can source and sink current as your battery simulator, TI highly recommends adding a large (≥1000µF) capacitor at the EVM BATTERY and GND connector to prevent oscillations at the BAT pin due to mismatched impedances of the charger output and source meter input within their respective regulation loop bandwidths. Configuring a source meter for 4-wire sensing eliminates the need for a separate voltmeter to measure the voltage at the BAT pin. When using 4-wire sensing, always make sure that the sensing leads are properly connected to prevent accidental overvoltage by the power leads.
3. For precise measurements of input and output current, especially near termination, the current meter in series with the battery or battery simulator must not be set to auto-range and needs to be removed entirely. An alternate method for measuring charge current is to either use an oscilloscope with hall effect current probe or by a differential voltage measurement across the relevant sensing resistors populated on the BQ2569X/X-Q1EVM.

Copyright © 2026 Texas Instruments Incorporated

4 Hardware Design Files

4.1 Schematics

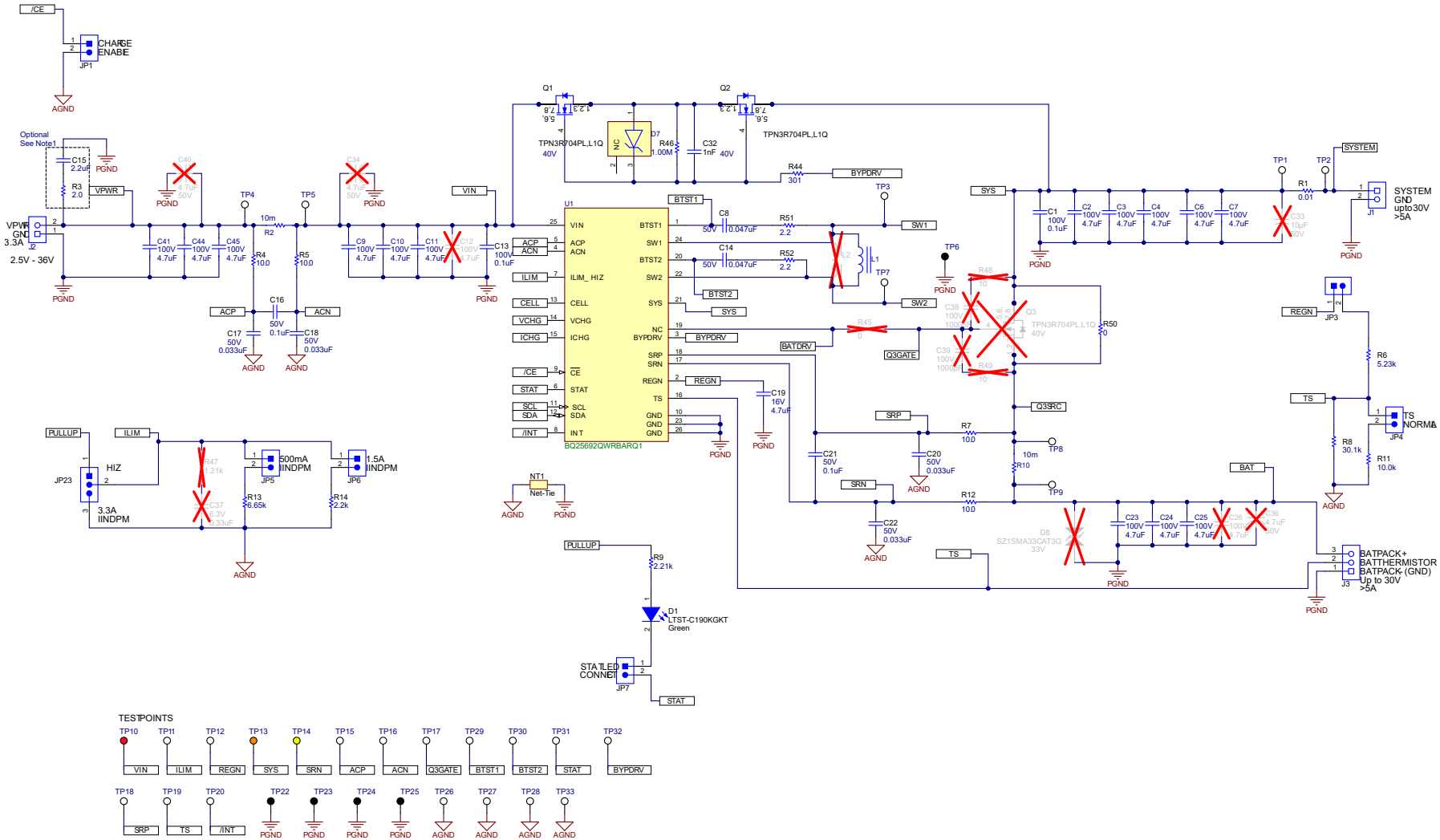

Figure 4-1. BQ25692-Q1EVM BMS083B Schematic Page 1

Copyright © 2026 Texas Instruments Incorporated

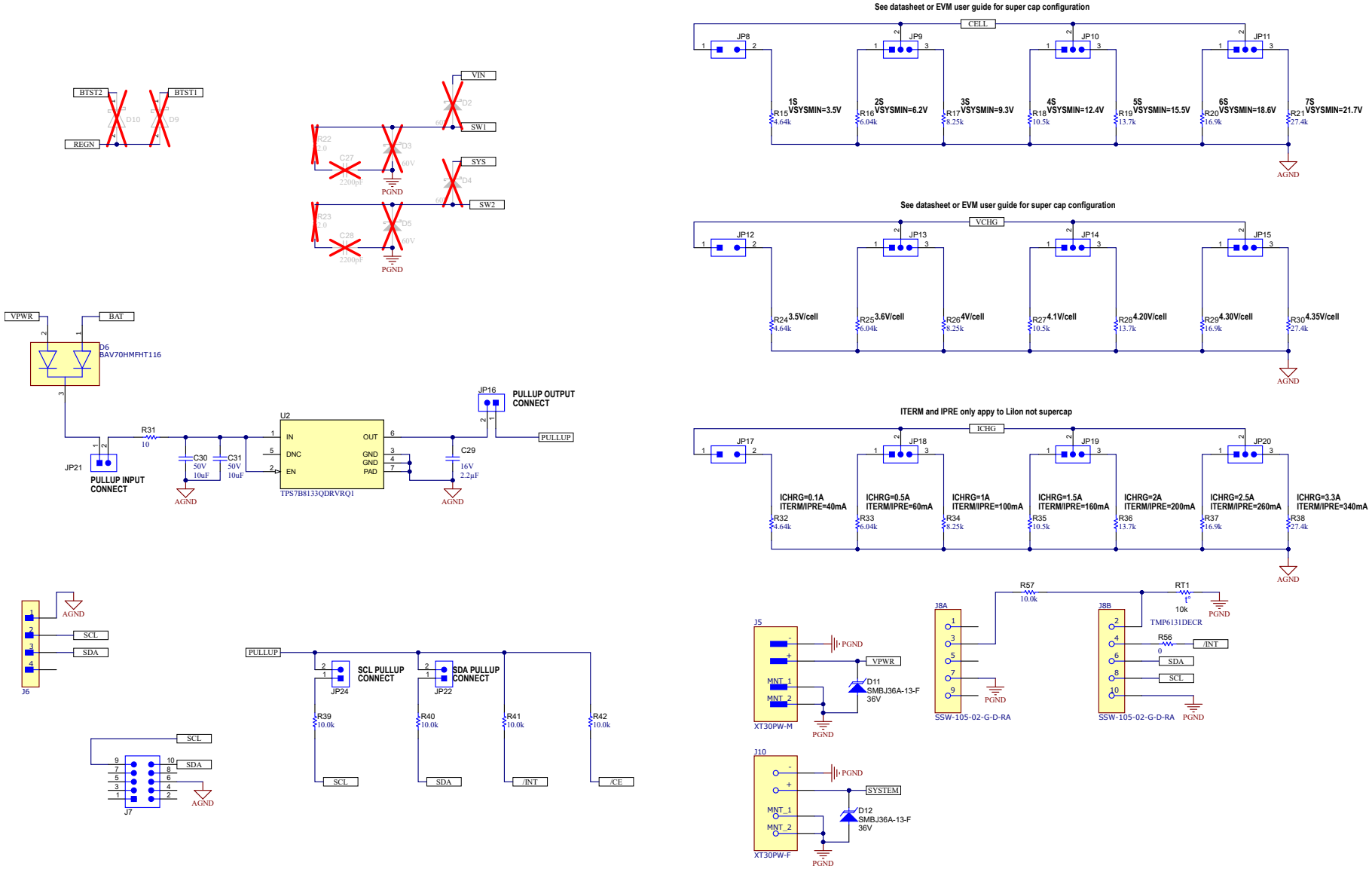

Figure 4-2. BQ2569X/9X-Q1EVM BMS083B Schematic Page 2

Copyright © 2026 Texas Instruments Incorporated

4.2 PCB Layout

Figure 4-3 through Figure 4-6 illustrate the PCB board layers.

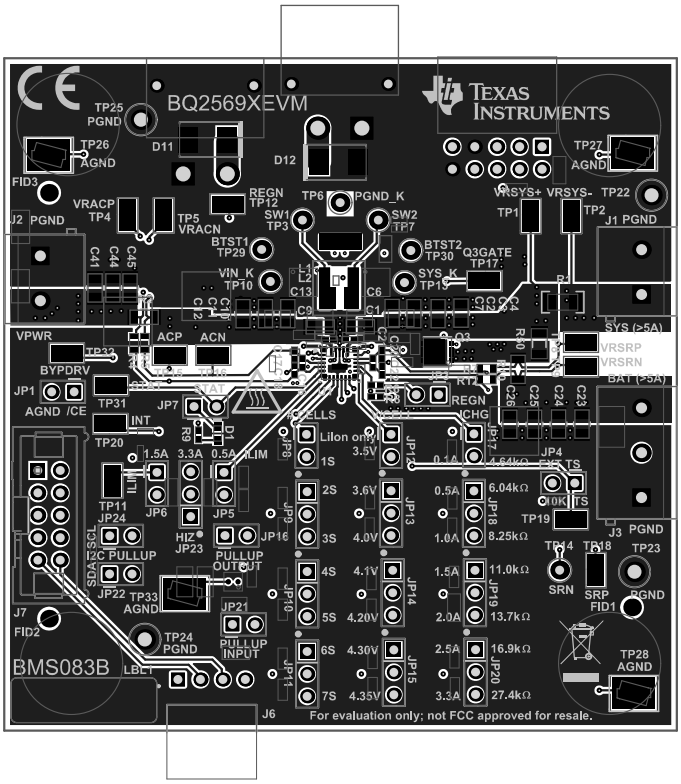

Figure 4-3. BMS083B Top

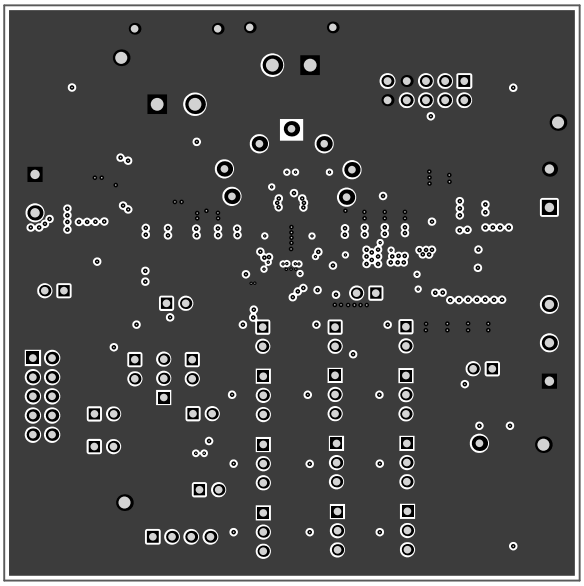

Figure 4-4. BMS083B Inner 1 Layer

Copyright © 2026 Texas Instruments Incorporated

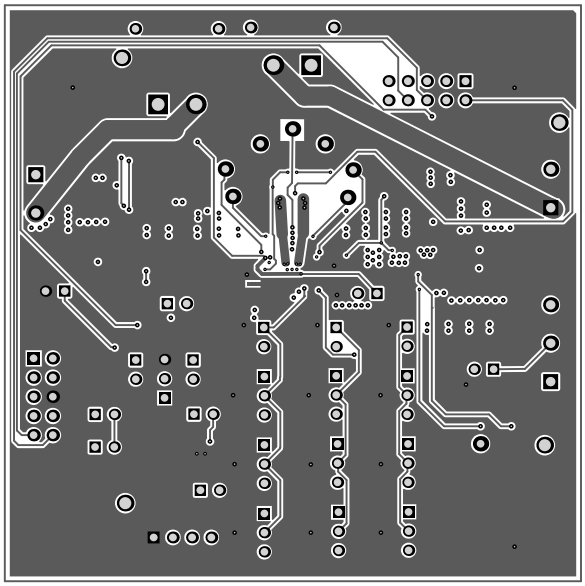

Figure 4-5. BMS083B Inner 2 Layer

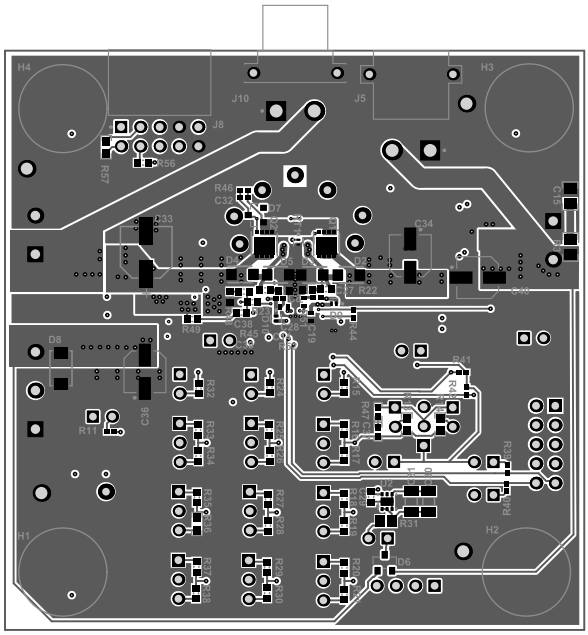

Figure 4-6. BMS083B Bottom

Copyright © 2026 Texas Instruments Incorporated

4.2.1 PCB Layout Guidelines

The switching node rise and fall times must be minimized for minimum switching loss. Proper layout of the components to minimize high frequency current path loop is important to prevent electrical and magnetic field radiation and high frequency resonant problems. Follow this specific order carefully to achieve the proper layout:

1. Place high frequency decoupling capacitors for VIN and SYS as close as possible to their respective pins and ground pin on the same layer as the charger IC (in other words, no vias) to have the smallest current return loop.
2. Place the REGN capacitor to ground and BTST capacitors to SW as close as possible to their respective pins.
3. Place high frequency decoupling capacitors for current sensing resistors as close as possible to their respective pins. Route the traces from the sense resistors to their IC away from the power pins (VIN, SWx, SYS).
4. Place the inductor as near to the SW1 and SW2 pins as possible given step 1 above. It is acceptable to use multiple vias to make these connections because the vias are only adding small amounts of inductance and resistance to an inductor with much higher inductance and DCR.
5. While this EVM has analog ground (AGND) and power ground (PGND) planes that connect close to the charge GND pin, two grounds planes/pours are not required. Resistors and capacitors used for setting sensitive nodes (for example, ACx, SRx, ILIM_HIZ, TS) can use one common ground plane but with their ground terminals connected away from high current ground return paths containing switching noise

See the EVM design for the recommended component placement with trace and via locations.

Copyright © 2026 Texas Instruments Incorporated

4.3 Bill of Materials (BOM)

Table 4-1. BQ25692-Q1EVM (BMS083B-003) Bill of Materials (BOM)

Designator	Quantity	Value	Description	Package Reference	Part Number	Manufacturer
C1, C13	2	0.1uF	CAP, CERM, 0.1uF, 100V, +/- 10%, X5R, 0402	0402	GRM155R62A104KE14D	MuRata
C2, C3, C4, C6, C7, C9, C10, C11, C23, C24, C25, C41, C44, C45	14	4.7µF	4.7µF ±10% 100V Ceramic Capacitor X7S 1206 (3216 Metric)	1206	GRM31CC72A475KE11L	Murata
C8, C14	2	0.047uF	CAP, CERM, 0.047uF, 50V, +/- 10%, X5R, 0402	0402	C1005X5R1H473K050BB	TDK
C15	1	2.2uF	CAP, CERM, 2.2uF, 50V, +/- 10%, X7R, 0805	0805	C2012X7R1H225K125AC	TDK
C16, C21	2	0.1uF	CAP, CERM, 0.1uF, 50V, +/- 10%, X7R, AEC-Q200 Grade 1, 0402	0402	GCM155R71H104KE02D	MuRata
C17, C18, C20, C22	4	0.033uF	CAP, CERM, 0.033uF, 50V, +/- 10%, X7R, AEC-Q200 Grade 1, 0402	0402	CGA2B3X7R1H333K050BB	TDK
C19	1	4.7uF	CAP, CERM, 4.7uF, 16V, +/- 20%, X6T, 0402	0402	GRM155D81C475ME15D	MuRata
C29	1	2.2uF	CAP, CERM, 2.2uF, 16V, +/- 10%, X7R, 0603	0603	GRM188Z71C225KE43D	MuRata
C30, C31	2	10uF	CAP, CERM, 10uF, 50V, +/- 10%, X5R, AEC-Q200 Grade 1, 1206	1206	GRT31CR61H106KE01L	MuRata
C32	1	1000pF	CAP, CERM, 1000pF, 50V, +/- 1%, C0G/NP0, 0402	0402	GRM1555C1H102FA01D	MuRata
D1	1	Green	LED, Green, SMD	1.6x0.8x0.8mm	LTST-C190KGKT	Lite-On
D6	1	70V	Diode, Schottky, 70V, 0.07A, SOT-23	SOT-23	BAS70-05-7-F	Diodes Inc.
D7	1		Zener Diode Single 15V 5% 30Ω 300mW Automotive 3-Pin SOT-23 T/R	SOT23	SZBZX84C15LT3G	On Semiconductor
D11, D12	2	36V	Diode, TVS, Uni, 36V, 58.1Vc, SMB	SMB	SMBJ36A-13-F	Diodes Inc.
H1, H2, H3, H4	4		Bumpon, Hemisphere, 0.44 × 0.20, Clear	Transparent Bumpon	SJ-5303 (CLEAR)	3M
J1, J2	2		Terminal Block, 5.08mm, 2x1, Brass, TH	2x1 5.08mm Terminal Block	ED120/2DS	On-Shore Technology
J3	1		Terminal Block, 5.08mm, 3x1, Brass, TH	3x1 5.08mm Terminal Block	ED120/3DS	On-Shore Technology
J5	1		Socket, DC supply, XT30, male, PIN: 2, on PCBs, THT, yellow, 15A, 500V	CONN_PLUG2	XT30PW-M	Amass
J6	1		Connector Header Through Hole, Right Angle 4 position 0.100" (2.54mm)	HDR4	22053041	Molex
J7	1		Header (shrouded), 100mil, 5x2, High-Temperature, Gold, TH	5x2 Shrouded header	N2510-6002-RB	3M
J8	1		10 Position Receptacle Connector 0.100" (2.54mm) Through Hole, Right Angle Gold	HDR10	SSW-105-02-G-D-RA	Samtec

Copyright © 2026 Texas Instruments Incorporated

Table 4-1. BQ25692-Q1EVM (BMS083B-003) Bill of Materials (BOM) (continued)

Designator	Quantity	Value	Description	Package Reference	Part Number	Manufacturer
J10	1		Socket, DC supply, XT30, female, PIN: 2, on PCBs, THT, yellow, 15A	CONN_SOCKET_DC2	XT30PW-F	Amass
JP1, JP3, JP4, JP5, JP6, JP7, JP8, JP12, JP16, JP17, JP21, JP22, JP24	13		Header, 100mil, 2x1, Tin, TH	Header, 2 PIN, 100mil, Tin	PEC02SAAN	Sullins Connector Solutions
JP9, JP10, JP11, JP13, JP14, JP15, JP18, JP19, JP20, JP23	10		Header, 100mil, 3x1, Tin, TH	Header, 3 PIN, 100mil, Tin	PEC03SAAN	Sullins Connector Solutions
L1	1	10uH	10µH Shielded Drum Core, Wirewound Inductor 5A 43mΩ Max Nonstandard	SMT_IND_6MM0_5MM7	SRP5050FA-100M1	Bourns
LBL1	1		Thermal Transfer Printable Labels, 0.650" W × 0.200" H - 10,000 per roll	PCB Label 0.650 × 0.200 inch	THT-14-423-10	Brady
Q1, Q2	2	40V	MOSFET, N-CH, 40V, 80A, 3.1x3.1mm	3.1x3.1mm	TPN3R704PL,L1Q	Toshiba
R1	1	0.01	RES, 0.01, 1%, 1W, 1206	1206	WSLP1206R0100FEA	Vishay-Dale
R2, R10	2	10m	10mΩ ±1% 1W Chip Resistor 1206 (3216 Metric) Anti-Sulfur, Automotive AEC-Q200, Current Sense, Moisture Resistant, Pulse Withstanding Metal Element	1206	WSLP1206R0100FEB	Vishay Dale
R3	1	2	RES, 2.0, 5%, 0.125W, AEC-Q200 Grade 0, 0805	0805	ERJ-6GEYJ2R0V	Panasonic
R4, R5, R7, R12	4	10	RES, 10.0, 1%, 0.25W, AEC-Q200 Grade 0, 0603	0603	CRCW060310R0FKEAHP	Vishay-Dale
R6	1	5.23k	RES, 5.23k, 1%, 0.063W, AEC-Q200 Grade 0, 0402	0402	CRCW04025K23FKED	Vishay-Dale
R8	1	30.1k	RES, 30.1k, 1%, 0.063W, AEC-Q200 Grade 0, 0402	0402	CRCW040230K1FKED	Vishay-Dale
R9	1	2.21k	RES, 2.21k, 1%, 0.063W, AEC-Q200 Grade 0, 0402	0402	CRCW04022K21FKED	Vishay-Dale
R11, R39, R40, R41, R42	5	10.0k	RES, 10.0k, 1%, 0.063W, AEC-Q200 Grade 0, 0402	0402	CRCW040210K0FKED	Vishay-Dale
R13	1	6.65k	RES, 6.65k, 1%, 0.1W, AEC-Q200 Grade 0, 0603	0603	CRCW06036K65FKEA	Vishay-Dale
R14	1	2.2k	RES, 2.2k, 5%, 0.1W, AEC-Q200 Grade 0, 0603	0603	CRCW06032K20JNEA	Vishay-Dale
R15, R24, R32	3	4.64k	RES, 4.64k, 1%, 0.1W, AEC-Q200 Grade 0, 0603	0603	CRCW06034K64FKEA	Vishay-Dale
R16, R25, R33	3	6.04k	RES, 6.04k, 1%, 0.1W, AEC-Q200 Grade 0, 0603	0603	CRCW06036K04FKEA	Vishay-Dale
R17, R26, R34	3	8.25k	RES, 8.25k, 1%, 0.1W, AEC-Q200 Grade 0, 0603	0603	CRCW06038K25FKEA	Vishay-Dale

Copyright © 2026 Texas Instruments Incorporated

Table 4-1. BQ25692-Q1EVM (BMS083B-003) Bill of Materials (BOM) (continued)

Designator	Quantity	Value	Description	Package Reference	Part Number	Manufacturer
R18, R27, R35	3	10.5k	RES, 10.5k, 1%, 0.1W, AEC-Q200 Grade 0, 0603	0603	CRCW060310K5FKEA	Vishay-Dale
R19, R28, R36	3	13.7k	RES, 13.7k, 1%, 0.1W, AEC-Q200 Grade 0, 0603	0603	CRCW060313K7FKEA	Vishay-Dale
R20, R29, R37	3	16.9k	RES, 16.9k, 0.5%, 0.1W, 0603	0603	RT0603DRE0716K9L	Yageo America
R21, R30, R38	3	27.4k	RES, 27.4k, 1%, 0.1W, AEC-Q200 Grade 0, 0603	0603	CRCW060327K4FKEA	Vishay-Dale
R31	1	10	RES, 10, 5%, 0.125W, AEC-Q200 Grade 0, 0805	0805	CRCW080510R0JNEA	Vishay-Dale
R44	1	301	RES, 301, 1%, 0.063W, AEC-Q200 Grade 0, 0402	0402	CRCW0402301RFKED	Vishay-Dale
R46	1	1.00Meg	RES, 1.00M, 1%, 0.063W, AEC-Q200 Grade 0, 0402	0402	CRCW04021M00FKED	Vishay-Dale
R50	1	0	RES, 0, 0.75W, AEC-Q200 Grade 0, 1206	1206	CRCW12060000Z0EAHP	Vishay-Dale
R51, R52	2	2.2	RES, 2.2, 5%, 0.063W, AEC-Q200 Grade 0, 0402	0402	CRCW04022R20JNED	Vishay-Dale
R56	1	0	RES, 0, 5%, 0.1W, AEC-Q200 Grade 0, 0603	0603	CRCW06030000Z0EA	Vishay-Dale
R57	1	10.0k	RES, 10.0k, 1%, 0.1W, 0603	0603	RC0603FR-0710KL	Yageo
RT1	1	10k	±1% tolerance 10kΩ linear thermistor available in 0402 and 0603 package options 2-X1SON -40 to 125	X1SON	TMP6131DECR	Texas Instruments
SH-JP1, SH-JP3, SH-JP4, SH-JP6, SH-JP7, SH-JP9, SH-JP14, SH-JP16, SH-JP18, SH-JP21	10	1x2	Shunt, 100mil, Gold plated, Black	Shunt	SNT-100-BK-G	Samtec
TP1, TP2, TP4, TP5, TP8, TP9, TP11, TP12, TP15, TP16, TP17, TP18, TP19, TP20, TP31, TP32	16		Test Point, Miniature, SMT	Testpoint_Keystone_Miniature	5015	Keystone Electronics
TP3, TP7, TP29, TP30	4		Test Point, Miniature, White, TH	White Miniature Testpoint	5002	Keystone Electronics, Keystone
TP6	1		Test Point, Miniature, Black, TH	Black Miniature Testpoint	5001	Keystone Electronics
TP10	1		Test Point, Miniature, Red, TH	Red Miniature Testpoint	5000	Keystone Electronics
TP13	1		Test Point, Miniature, Orange, TH	Orange Miniature Testpoint	5003	Keystone Electronics
TP14	1		Test Point, Miniature, Yellow, TH	Yellow Miniature Testpoint	5004	Keystone Electronics
TP22, TP23, TP24, TP25	4		Test Point, Multipurpose, Black, TH	Black Multipurpose Testpoint	5011	Keystone Electronics

Copyright © 2026 Texas Instruments Incorporated

Table 4-1. BQ25692-Q1EVM (BMS083B-003) Bill of Materials (BOM) (continued)

Designator	Quantity	Value	Description	Package Reference	Part Number	Manufacturer
TP26, TP27, TP28, TP33	4		Test Point, Compact, SMT	Testpoint_Keystone_Compact	5016	Keystone Electronics
U1	1		BQ25692QWRBARQ1	WQFN-HR26	BQ25692QWRBARQ1	Texas Instruments
U2	1		Automotive 150mA high-voltage ultra-low-IQ low-dropout (LDO) linear regulator, DRV0006A (WSON-6)	DRV0006A	TPS7B8133QDRVRQ1	Texas Instruments
C12, C26	0	4.7µF	4.7µF ±10% 100V Ceramic Capacitor X7S 1206 (3216 Metric)	1206	GRM31CC72A475KE11L	Murata
C27, C28	0	2200pF	CAP, CERM, 2200pF, 50V, +/- 5%, C0G/NP0, 0603	0603	GRM1885C1H222JA01D	MuRata
C33	0		WCAP-ASLL Aluminum Electrolytic Capacitor, V-Chip, D6.3 × H5.5mm, 10µF, 50V			Wurth Elektronik
C34, C36, C40	0	4.7µF	4.7µF 50V Aluminum Electrolytic Capacitors Radial, Can - SMD 2000Hrs @ 105°C	SMD2	8.65061E+11	Wurth
C37	0	0.33uF	CAP, CERM, 0.33uF, 6.3V, +/- 10%, X5R, 0402	0402	GRM155R60J334KE01D	MuRata
C38, C39	0	1000pF	CAP, CERM, 1000pF, 100V, +/- 5%, C0G/NP0, 0603	0603	GRM1885C2A102JA01D	MuRata
D2, D3, D4, D5	0	60V	Diode, Schottky, 60V, 1A, AEC-Q101, DO-219AB	DO-219AB	SS1FH6HM3/H	Vishay-Semiconductor
D8	0	33V	Diode, TVS, Bi, 33V, 53.3Vc, 400W, 7.5A, AEC-Q101, SMA (non-polarized)	SMA (non-polarized)	SZ1SMA33CAT3G	Littelfuse
D9, D10	0		DIODE SCHOTTKY 60V 1A DSN1006-2	SOD993	PMEG6010AESBYL	Nexperia
FID1, FID2, FID3	0		Fiducial mark. There is nothing to buy or mount.	N/A	N/A	N/A
L2	0		WE-MAPI SMT Power Inductor, size 2512, 2.2uH, 1.6A, 141mΩ			Wurth Elektronik
Q3	0	40V	MOSFET, N-CH, 40V, 80A, 3.1 × 3.1mm	3.1x3.1mm	TPN3R704PL,L1Q	Toshiba
R22, R23	0	2	RES, 2.0, 5%, 0.1W, AEC-Q200 Grade 0, 0603	0603	CRCW06032R00JNEA	Vishay-Dale
R45	0	0	RES, 0, 5%, 0.1W, AEC-Q200 Grade 0, 0603	0603	CRCW06030000Z0EA	Vishay-Dale
R47	0	1.21k	RES, 1.21k, 1%, 0.063W, AEC-Q200 Grade 0, 0402	0402	CRCW04021K21FKED	Vishay-Dale
R48, R49	0	10	RES, 10, 5%, 0.1W, AEC-Q200 Grade 0, 0603	0603	CRCW060310R0JNEA	Vishay-Dale

Copyright © 2026 Texas Instruments Incorporated

5 Additional Information

Trademarks

All trademarks are the property of their respective owners.

6 Revision History

NOTE: Page numbers for previous revisions may differ from page numbers in the current version.

Changes from Revision A (July 2026) to Revision B (October 2026) **Page**

- Updated description section 1
- Rearranged steps and corrected information..... 1
- Moved sentence and corrected information..... 7
- Added Note 1.....10
- Updated J5,J10 connections and routing..... 12
- Updated R6, R8, R18, R27, R35, J5, J10..... 15

Changes from Revision * (October 2025) to Revision A (July 2026) **Page**

- Updated description section 1
- Updated hardware image..... 1
- Changed JP23 functionality and added JP24.....3
- Updated figure to REVB PCB.....6
- Summarized register setup into a table.....7
- Updated hardware design files from REVE-2 to final REVB..... 10
- Updated R6, R8, R18, R27, R35 values and J5, J10 connections.....10

DATE	REVISION	NOTES
October 2025	*	Initial Release

Copyright © 2026 Texas Instruments Incorporated

STANDARD TERMS FOR EVALUATION MODULES

1. *Delivery:* TI delivers TI evaluation boards, kits, or modules, including any accompanying demonstration software, components, and/or documentation which may be provided together or separately (collectively, an "EVM" or "EVMs") to the User ("User") in accordance with the terms set forth herein. User's acceptance of the EVM is expressly subject to the following terms.

   1.1 EVMs are intended solely for product or software developers for use in a research and development setting to facilitate feasibility evaluation, experimentation, or scientific analysis of TI semiconductors products. EVMs have no direct function and are not finished products. EVMs shall not be directly or indirectly assembled as a part or subassembly in any finished product. For clarification, any software or software tools provided with the EVM ("Software") shall not be subject to the terms and conditions set forth herein but rather shall be subject to the applicable terms that accompany such Software

   1.2 EVMs are not intended for consumer or household use. EVMs may not be sold, sublicensed, leased, rented, loaned, assigned, or otherwise distributed for commercial purposes by Users, in whole or in part, or used in any finished product or production system.

2 *Limited Warranty and Related Remedies/Disclaimers*:

   2.1 These terms do not apply to Software. The warranty, if any, for Software is covered in the applicable Software License Agreement.

   2.2 TI warrants that the TI EVM will conform to TI's published specifications for ninety (90) days after the date TI delivers such EVM to User. Notwithstanding the foregoing, TI shall not be liable for a nonconforming EVM if (a) the nonconformity was caused by neglect, misuse or mistreatment by an entity other than TI, including improper installation or testing, or for any EVMs that have been altered or modified in any way by an entity other than TI, (b) the nonconformity resulted from User's design, specifications or instructions for such EVMs or improper system design, or (c) User has not paid on time. Testing and other quality control techniques are used to the extent TI deems necessary. TI does not test all parameters of each EVM. User's claims against TI under this Section 2 are void if User fails to notify TI of any apparent defects in the EVMs within ten (10) business days after delivery, or of any hidden defects with ten (10) business days after the defect has been detected.

   2.3 TI's sole liability shall be at its option to repair or replace EVMs that fail to conform to the warranty set forth above, or credit User's account for such EVM. TI's liability under this warranty shall be limited to EVMs that are returned during the warranty period to the address designated by TI and that are determined by TI not to conform to such warranty. If TI elects to repair or replace such EVM, TI shall have a reasonable time to repair such EVM or provide replacements. Repaired EVMs shall be warranted for the remainder of the original warranty period. Replaced EVMs shall be warranted for a new full ninety (90) day warranty period.

WARNING

Evaluation Kits are intended solely for use by technically qualified, professional electronics experts who are familiar with the dangers and application risks associated with handling electrical mechanical components, systems, and subsystems.

User shall operate the Evaluation Kit within TI's recommended guidelines and any applicable legal or environmental requirements as well as reasonable and customary safeguards. Failure to set up and/or operate the Evaluation Kit within TI's recommended guidelines may result in personal injury or death or property damage. Proper set up entails following TI's instructions for electrical ratings of interface circuits such as input, output and electrical loads.

NOTE:

EXPOSURE TO ELECTROSTATIC DISCHARGE (ESD) MAY CAUSE DEGREDATION OR FAILURE OF THE EVALUATION KIT; TI RECOMMENDS STORAGE OF THE EVALUATION KIT IN A PROTECTIVE ESD BAG.

3 *Regulatory Notices:*

3.1 *United States*

3.1.1 *Notice applicable to EVMs not FCC-Approved:*

FCC NOTICE: This kit is designed to allow product developers to evaluate electronic components, circuitry, or software associated with the kit to determine whether to incorporate such items in a finished product and software developers to write software applications for use with the end product. This kit is not a finished product and when assembled may not be resold or otherwise marketed unless all required FCC equipment authorizations are first obtained. Operation is subject to the condition that this product not cause harmful interference to licensed radio stations and that this product accept harmful interference. Unless the assembled kit is designed to operate under part 15, part 18 or part 95 of this chapter, the operator of the kit must operate under the authority of an FCC license holder or must secure an experimental authorization under part 5 of this chapter.

3.1.2 *For EVMs annotated as FCC – FEDERAL COMMUNICATIONS COMMISSION Part 15 Compliant:*

CAUTION

This device complies with part 15 of the FCC Rules. Operation is subject to the following two conditions: (1) This device may not cause harmful interference, and (2) this device must accept any interference received, including interference that may cause undesired operation.

Changes or modifications not expressly approved by the party responsible for compliance could void the user's authority to operate the equipment.

FCC Interference Statement for Class A EVM devices

NOTE: This equipment has been tested and found to comply with the limits for a Class A digital device, pursuant to part 15 of the FCC Rules. These limits are designed to provide reasonable protection against harmful interference when the equipment is operated in a commercial environment. This equipment generates, uses, and can radiate radio frequency energy and, if not installed and used in accordance with the instruction manual, may cause harmful interference to radio communications. Operation of this equipment in a residential area is likely to cause harmful interference in which case the user will be required to correct the interference at his own expense.

FCC Interference Statement for Class B EVM devices

NOTE: This equipment has been tested and found to comply with the limits for a Class B digital device, pursuant to part 15 of the FCC Rules. These limits are designed to provide reasonable protection against harmful interference in a residential installation. This equipment generates, uses and can radiate radio frequency energy and, if not installed and used in accordance with the instructions, may cause harmful interference to radio communications. However, there is no guarantee that interference will not occur in a particular installation. If this equipment does cause harmful interference to radio or television reception, which can be determined by turning the equipment off and on, the user is encouraged to try to correct the interference by one or more of the following measures:

- *Reorient or relocate the receiving antenna.*
- *Increase the separation between the equipment and receiver.*
- *Connect the equipment into an outlet on a circuit different from that to which the receiver is connected.*
- *Consult the dealer or an experienced radio/TV technician for help.*

3.2 *Canada*

3.2.1 *For EVMs issued with an Industry Canada Certificate of Conformance to RSS-210 or RSS-247*

Concerning EVMs Including Radio Transmitters:

This device complies with Industry Canada license-exempt RSSs. Operation is subject to the following two conditions:

(1) this device may not cause interference, and (2) this device must accept any interference, including interference that may cause undesired operation of the device.

Concernant les EVMs avec appareils radio:

Le présent appareil est conforme aux CNR d'Industrie Canada applicables aux appareils radio exempts de licence. L'exploitation est autorisée aux deux conditions suivantes: (1) l'appareil ne doit pas produire de brouillage, et (2) l'utilisateur de l'appareil doit accepter tout brouillage radioélectrique subi, même si le brouillage est susceptible d'en compromettre le fonctionnement.

Concerning EVMs Including Detachable Antennas:

Under Industry Canada regulations, this radio transmitter may only operate using an antenna of a type and maximum (or lesser) gain approved for the transmitter by Industry Canada. To reduce potential radio interference to other users, the antenna type and its gain should be so chosen that the equivalent isotropically radiated power (e.i.r.p.) is not more than that necessary for successful communication. This radio transmitter has been approved by Industry Canada to operate with the antenna types listed in the user guide with the maximum permissible gain and required antenna impedance for each antenna type indicated. Antenna types not included in this list, having a gain greater than the maximum gain indicated for that type, are strictly prohibited for use with this device.

Concernant les EVMs avec antennes détachables

Conformément à la réglementation d'Industrie Canada, le présent émetteur radio peut fonctionner avec une antenne d'un type et d'un gain maximal (ou inférieur) approuvé pour l'émetteur par Industrie Canada. Dans le but de réduire les risques de brouillage radioélectrique à l'intention des autres utilisateurs, il faut choisir le type d'antenne et son gain de sorte que la puissance isotrope rayonnée équivalente (p.i.r.e.) ne dépasse pas l'intensité nécessaire à l'établissement d'une communication satisfaisante. Le présent émetteur radio a été approuvé par Industrie Canada pour fonctionner avec les types d'antenne énumérés dans le manuel d'usage et ayant un gain admissible maximal et l'impédance requise pour chaque type d'antenne. Les types d'antenne non inclus dans cette liste, ou dont le gain est supérieur au gain maximal indiqué, sont strictement interdits pour l'exploitation de l'émetteur

3.3 *Japan*

3.3.1 *Notice for EVMs delivered in Japan:* Please see http://www.tij.co.jp/lsds/ti_ja/general/eStore/notice_01.page 日本国内に輸入される評価用キット、ボードについては、次のところをご覧ください。

https://www.ti.com/ja-jp/legal/notice-for-evaluation-kits-delivered-in-japan.html

3.3.2 *Notice for Users of EVMs Considered "Radio Frequency Products" in Japan:* EVMs entering Japan may not be certified by TI as conforming to Technical Regulations of Radio Law of Japan.

If User uses EVMs in Japan, not certified to Technical Regulations of Radio Law of Japan, User is required to follow the instructions set forth by Radio Law of Japan, which includes, but is not limited to, the instructions below with respect to EVMs (which for the avoidance of doubt are stated strictly for convenience and should be verified by User):

1. Use EVMs in a shielded room or any other test facility as defined in the notification #173 issued by Ministry of Internal Affairs and Communications on March 28, 2006, based on Sub-section 1.1 of Article 6 of the Ministry's Rule for Enforcement of Radio Law of Japan,
2. Use EVMs only after User obtains the license of Test Radio Station as provided in Radio Law of Japan with respect to EVMs, or
3. Use of EVMs only after User obtains the Technical Regulations Conformity Certification as provided in Radio Law of Japan with respect to EVMs. Also, do not transfer EVMs, unless User gives the same notice above to the transferee. Please note that if User does not follow the instructions above, User will be subject to penalties of Radio Law of Japan.

【無線電波を送信する製品の開発キットをお使いになる際の注意事項】 開発キットの中には技術基準適合証明を受けていないものがあります。 技術適合証明を受けていないもののご使用に際しては、電波法遵守のため、以下のいずれかの措置を取っていただく必要がありますのでご注意ください。

1. 電波法施行規則第6条第1項第1号に基づく平成18年3月28日総務省告示第173号で定められた電波暗室等の試験設備でご使用いただく。
2. 実験局の免許を取得後ご使用いただく。
3. 技術基準適合証明を取得後ご使用いただく。

なお、本製品は、上記の「ご使用にあたっての注意」を譲渡先、移転先に通知しない限り、譲渡、移転できないものとします。

上記を遵守頂けない場合は、電波法の罰則が適用される可能性があることをご留意ください。 日本テキサス· インスツルメンツ株式会社

東京都新宿区西新宿６丁目２４番１号

西新宿三井ビル

3.3.3 *Notice for EVMs for Power Line Communication:* Please see http://www.tij.co.jp/lsds/ti_ja/general/eStore/notice_02.page 電力線搬送波通信についての開発キットをお使いになる際の注意事項については、次のところをご覧ください。https://www.ti.com/ja-jp/legal/notice-for-evaluation-kits-for-power-line-communication.html

3.4 *European Union*

3.4.1 *For EVMs subject to EU Directive 2014/30/EU (Electromagnetic Compatibility Directive)*:

This is a class A product intended for use in environments other than domestic environments that are connected to a low-voltage power-supply network that supplies buildings used for domestic purposes. In a domestic environment this product may cause radio interference in which case the user may be required to take adequate measures.

4 *EVM Use Restrictions and Warnings:*

4.1 EVMS ARE NOT FOR USE IN FUNCTIONAL SAFETY AND/OR SAFETY CRITICAL EVALUATIONS, INCLUDING BUT NOT LIMITED TO EVALUATIONS OF LIFE SUPPORT APPLICATIONS.

4.2 User must read and apply the user guide and other available documentation provided by TI regarding the EVM prior to handling or using the EVM, including without limitation any warning or restriction notices. The notices contain important safety information related to, for example, temperatures and voltages.

4.3 *Safety-Related Warnings and Restrictions:*

4.3.1 User shall operate the EVM within TI's recommended specifications and environmental considerations stated in the user guide, other available documentation provided by TI, and any other applicable requirements and employ reasonable and customary safeguards. Exceeding the specified performance ratings and specifications (including but not limited to input and output voltage, current, power, and environmental ranges) for the EVM may cause personal injury or death, or property damage. If there are questions concerning performance ratings and specifications, User should contact a TI field representative prior to connecting interface electronics including input power and intended loads. Any loads applied outside of the specified output range may also result in unintended and/or inaccurate operation and/or possible permanent damage to the EVM and/or interface electronics. Please consult the EVM user guide prior to connecting any load to the EVM output. If there is uncertainty as to the load specification, please contact a TI field representative. During normal operation, even with the inputs and outputs kept within the specified allowable ranges, some circuit components may have elevated case temperatures. These components include but are not limited to linear regulators, switching transistors, pass transistors, current sense resistors, and heat sinks, which can be identified using the information in the associated documentation. When working with the EVM, please be aware that the EVM may become very warm.

4.3.2 EVMs are intended solely for use by technically qualified, professional electronics experts who are familiar with the dangers and application risks associated with handling electrical mechanical components, systems, and subsystems. User assumes all responsibility and liability for proper and safe handling and use of the EVM by User or its employees, affiliates, contractors or designees. User assumes all responsibility and liability to ensure that any interfaces (electronic and/or mechanical) between the EVM and any human body are designed with suitable isolation and means to safely limit accessible leakage currents to minimize the risk of electrical shock hazard. User assumes all responsibility and liability for any improper or unsafe handling or use of the EVM by User or its employees, affiliates, contractors or designees.

4.4 User assumes all responsibility and liability to determine whether the EVM is subject to any applicable international, federal, state, or local laws and regulations related to User's handling and use of the EVM and, if applicable, User assumes all responsibility and liability for compliance in all respects with such laws and regulations. User assumes all responsibility and liability for proper disposal and recycling of the EVM consistent with all applicable international, federal, state, and local requirements.

5. *Accuracy of Information:* To the extent TI provides information on the availability and function of EVMs, TI attempts to be as accurate as possible. However, TI does not warrant the accuracy of EVM descriptions, EVM availability or other information on its websites as accurate, complete, reliable, current, or error-free.

6. *Disclaimers:*

6.1 EXCEPT AS SET FORTH ABOVE, EVMS AND ANY MATERIALS PROVIDED WITH THE EVM (INCLUDING, BUT NOT LIMITED TO, REFERENCE DESIGNS AND THE DESIGN OF THE EVM ITSELF) ARE PROVIDED "AS IS" AND "WITH ALL FAULTS." TI DISCLAIMS ALL OTHER WARRANTIES, EXPRESS OR IMPLIED, REGARDING SUCH ITEMS, INCLUDING BUT NOT LIMITED TO ANY EPIDEMIC FAILURE WARRANTY OR IMPLIED WARRANTIES OF MERCHANTABILITY OR FITNESS FOR A PARTICULAR PURPOSE OR NON-INFRINGEMENT OF ANY THIRD PARTY PATENTS, COPYRIGHTS, TRADE SECRETS OR OTHER INTELLECTUAL PROPERTY RIGHTS.

6.2 EXCEPT FOR THE LIMITED RIGHT TO USE THE EVM SET FORTH HEREIN, NOTHING IN THESE TERMS SHALL BE CONSTRUED AS GRANTING OR CONFERRING ANY RIGHTS BY LICENSE, PATENT, OR ANY OTHER INDUSTRIAL OR INTELLECTUAL PROPERTY RIGHT OF TI, ITS SUPPLIERS/LICENSORS OR ANY OTHER THIRD PARTY, TO USE THE EVM IN ANY FINISHED END-USER OR READY-TO-USE FINAL PRODUCT, OR FOR ANY INVENTION, DISCOVERY OR IMPROVEMENT, REGARDLESS OF WHEN MADE, CONCEIVED OR ACQUIRED.

7. *USER'S INDEMNITY OBLIGATIONS AND REPRESENTATIONS.* USER WILL DEFEND, INDEMNIFY AND HOLD TI, ITS LICENSORS AND THEIR REPRESENTATIVES HARMLESS FROM AND AGAINST ANY AND ALL CLAIMS, DAMAGES, LOSSES, EXPENSES, COSTS AND LIABILITIES (COLLECTIVELY, "CLAIMS") ARISING OUT OF OR IN CONNECTION WITH ANY HANDLING OR USE OF THE EVM THAT IS NOT IN ACCORDANCE WITH THESE TERMS. THIS OBLIGATION SHALL APPLY WHETHER CLAIMS ARISE UNDER STATUTE, REGULATION, OR THE LAW OF TORT, CONTRACT OR ANY OTHER LEGAL THEORY, AND EVEN IF THE EVM FAILS TO PERFORM AS DESCRIBED OR EXPECTED.

8. *Limitations on Damages and Liability:*

   8.1 *General Limitations*. IN NO EVENT SHALL TI BE LIABLE FOR ANY SPECIAL, COLLATERAL, INDIRECT, PUNITIVE, INCIDENTAL, CONSEQUENTIAL, OR EXEMPLARY DAMAGES IN CONNECTION WITH OR ARISING OUT OF THESE TERMS OR THE USE OF THE EVMS , REGARDLESS OF WHETHER TI HAS BEEN ADVISED OF THE POSSIBILITY OF SUCH DAMAGES. EXCLUDED DAMAGES INCLUDE, BUT ARE NOT LIMITED TO, COST OF REMOVAL OR REINSTALLATION, ANCILLARY COSTS TO THE PROCUREMENT OF SUBSTITUTE GOODS OR SERVICES, RETESTING, OUTSIDE COMPUTER TIME, LABOR COSTS, LOSS OF GOODWILL, LOSS OF PROFITS, LOSS OF SAVINGS, LOSS OF USE, LOSS OF DATA, OR BUSINESS INTERRUPTION. NO CLAIM, SUIT OR ACTION SHALL BE BROUGHT AGAINST TI MORE THAN TWELVE (12) MONTHS AFTER THE EVENT THAT GAVE RISE TO THE CAUSE OF ACTION HAS OCCURRED.

   8.2 *Specific Limitations.* IN NO EVENT SHALL TI'S AGGREGATE LIABILITY FROM ANY USE OF AN EVM PROVIDED HEREUNDER, INCLUDING FROM ANY WARRANTY, INDEMITY OR OTHER OBLIGATION ARISING OUT OF OR IN CONNECTION WITH THESE TERMS, , EXCEED THE TOTAL AMOUNT PAID TO TI BY USER FOR THE PARTICULAR EVM(S) AT ISSUE DURING THE PRIOR TWELVE (12) MONTHS WITH RESPECT TO WHICH LOSSES OR DAMAGES ARE CLAIMED. THE EXISTENCE OF MORE THAN ONE CLAIM SHALL NOT ENLARGE OR EXTEND THIS LIMIT.

9. *Return Policy.* Except as otherwise provided, TI does not offer any refunds, returns, or exchanges. Furthermore, no return of EVM(s) will be accepted if the package has been opened and no return of the EVM(s) will be accepted if they are damaged or otherwise not in a resalable condition. If User feels it has been incorrectly charged for the EVM(s) it ordered or that delivery violates the applicable order, User should contact TI. All refunds will be made in full within thirty (30) working days from the return of the components(s), excluding any postage or packaging costs.

10. *Governing Law:* These terms and conditions shall be governed by and interpreted in accordance with the laws of the State of Texas, without reference to conflict-of-laws principles. User agrees that non-exclusive jurisdiction for any dispute arising out of or relating to these terms and conditions lies within courts located in the State of Texas and consents to venue in Dallas County, Texas. Notwithstanding the foregoing, any judgment may be enforced in any United States or foreign court, and TI may seek injunctive relief in any United States or foreign court.

Mailing Address: Texas Instruments, Post Office Box 655303, Dallas, Texas 75265
Copyright © 2023, Texas Instruments Incorporated

IMPORTANT NOTICE AND DISCLAIMER

TI PROVIDES TECHNICAL AND RELIABILITY DATA (INCLUDING DATASHEETS), DESIGN RESOURCES (INCLUDING REFERENCE DESIGNS), APPLICATION OR OTHER DESIGN ADVICE, WEB TOOLS, SAFETY INFORMATION, AND OTHER RESOURCES “AS IS” AND WITH ALL FAULTS, AND DISCLAIMS ALL WARRANTIES, EXPRESS AND IMPLIED, INCLUDING WITHOUT LIMITATION ANY IMPLIED WARRANTIES OF MERCHANTABILITY, FITNESS FOR A PARTICULAR PURPOSE OR NON-INFRINGEMENT OF THIRD PARTY INTELLECTUAL PROPERTY RIGHTS.

These resources are intended for skilled developers designing with TI products. You are solely responsible for (1) selecting the appropriate TI products for your application, (2) designing, validating and testing your application, and (3) ensuring your application meets applicable standards, and any other safety, security, regulatory or other requirements.

These resources are subject to change without notice. TI grants you permission to use these resources only for development of an application that uses the TI products described in the resource. Other reproduction and display of these resources is prohibited. No license is granted to any other TI intellectual property right or to any third party intellectual property right. TI disclaims responsibility for, and you fully indemnify TI and its representatives against any claims, damages, costs, losses, and liabilities arising out of your use of these resources.

TI’s products are provided subject to TI’s Terms of Sale, TI’s General Quality Guidelines, or other applicable terms available either on ti.com or provided in conjunction with such TI products. TI’s provision of these resources does not expand or otherwise alter TI’s applicable warranties or warranty disclaimers for TI products. Unless TI explicitly designates a product as custom or customer-specified, TI products are standard, catalog, general purpose devices.

TI objects to and rejects any additional or different terms you may propose.

Copyright © 2026, Texas Instruments Incorporated

Last updated 10/2025