AM263x Sitara™ Microcontrollers with Real-Time Control

1 Features

Processor Cores:

- Single, dual, and quad-core Arm®Cortex®-R5F MCU with each core running up to 400MHz
  - 16KB I-cache with 64-bit ECC per CPU core
  - 16KB D-cache with 32-bit ECC per CPU core
  - 64KB Tightly-Coupled Memory (TCM) with 32-bit ECC per CPU core
  - Lockstep or Dual-core capable clusters

Memory Subsystem:

- 2MB of On-Chip RAM (OCSRAM)
  - 4 Banks x 512KB
  - ECC error protection
  - Internal DMA engine support

System on Chip (SoC) Services and Architecture:

- 1x EDMA to support data movement functions
- Device Boot supported from the following interfaces:
  - UART (Primary/Backup)
  - QSPI NOR Flash (4S/1S) (Primary)
- Interprocessor communication modules
  - SPINLOCK module for synchronizing processes running on multiple cores
  - MAILBOX functionality implemented through CTRLMMR registers
- Central Platform Time Sync (CPTS) support with time-sync and compare-event interrupt routers

Media and Data Storage:

- 1x 4-bit Multi-Media Card/Secure Digital (MMC/SD) interface
- General-Purpose Memory Controller (GPMC)
  - 16-bit parallel data bus with 22-bit address bus
  - Up to 4MB addressable memory space
  - Integrated Error Location Module (ELM) support for error checking

General Connectivity:

- 6x Universal Asynchronous RX-TX (UART)
- 5x Serial Peripheral Interface (SPI) controllers
- 5x Local Interconnect Network (LIN) ports
- 4x Inter-Integrated Circuit (I2C) ports
- 4x Modular Controller Area Network (MCAN) modules with CAN-FD support
- 1x Quad Serial Peripheral Interface (QSPI)
- 4x Fast Serial Interface Transmitters (FSITX)
- 4x Fast Serial Interface Receivers (FSIRX)
- Up to 139 General-Purpose I/O (GPIO) pins

Sensing & Actuation:

- Real-time Control Subsystem (CONTROLSS)
- Flexible Input/Output Crossbars (XBAR)
- 5x 12-bit Analog-to-Digital Converters (ADC)
  - 6-input SAR ADC up to 4MSPS
    - 6x Single-ended channels **OR**
    - 3x Differential channels
  - Highly Configurable ADC Digital Logic
    - XBAR Start of Conversion Triggers (SOC)
    - User-defined Sample and Hold (S+H)
    - Flexible Post-Processing Blocks (PPB)
- 10x Analog Comparators with Type-A programmable DAC reference (CMPSSA)
- 10x Analog Comparators with Type-B programmable DAC reference (CMPSSB)
- 1x 12-bit Digital-to-Analog Converter (DAC)
- 32x Pulse Width Modulation (EPWM) modules
  - Single or Dual PWM channels
  - Advanced PWM Configurations
  - Extended HRPWM time resolution
- 10x Enhanced Capture (ECAP) modules
- 3x Enhanced Quadrature Encoder Pulse (EQEP) modules
- 2x 4-Ch Sigma-Delta Filter Modules (SDFM)
- Additional Signal-multiplex Crossbars (XBAR)

Industrial Connectivity:

- Programmable Real-Time Unit (PRU-SS) and PRU-Industrial Communication Subsystem (PRU-ICSS)
  - Dual core Programmable Realtime Unit Subsystem (PRU0 / PRU1)
    - Deterministic Hardware
    - Dynamic Firmware
  - 20-channel enhanced input (eGPI) per PRU
  - 20-channel enhanced output (eGPO) per PRU
  - Embedded Peripherals and Memory
    - 1x UART, 1x ECAP
    - 1x MDIO, 1x IEP,
    - 1x 32KB Shared General Purpose RAM
    - 2x 8KB Shared Data RAM
    - 1x 16KB IRAM per PRU
    - ScratchPad (SPAD), MAC/CRC
  - Digital encoder and sigma-delta control loops
  - The PRU-ICSS enables advanced industrial protocols including:
    - EtherCAT®, Ethernet/IP™,
    - PROFINET®, IO-Link® for order
  - Dedicated Interrupt Controller (INTC)
  - Dynamic CONTROLSS XBAR Integration

An IMPORTANT NOTICE at the end of this data sheet addresses availability, warranty, changes, use in safety-critical applications, intellectual property matters and other important disclaimers. PRODUCTION DATA.

High-Speed Interfaces:

- Integrated Ethernet switch supporting two external ports
  - MII (10/100), RMII (10/100), or RGMII (10/100/1000)
  - IEEE 1588 (2008 Annex D, Annex E, Annex F) with 802.1AS PTP
  - Clause 45 MDIO PHY management
  - 512x ALE engine-based Packet Classifiers
  - Priority flow control with up to 2KB packet size
  - Four CPU hardware interrupt pacing
  - IP/UDP/TCP checksum offload in hardware

Security:

- Hardware Security Module (HSM) with support for Auto SHE 1.1/EVITA - full HSM
- Secure boot support
  - Device Take Over Protection
  - Hardware-enforced root-of-trust
  - Authenticated boot
  - SW Anti-rollback protection
- Debug security
  - Secure device debug only after proper authentication
  - Ability to disable device debug functionality
- Device ID and Key Management
  - Support for OTP Memory (FUSEROM)
    - Store root keys & other security fields
  - Separate EFUSE controllers and FUSE ROMs
  - Unique Public Device Identifiers (UIDs)
- Memory Protection Units (MPU)
  - Dedicated Arm® MPU per Cortex®-R5F core
  - System MPU - present at various interfaces in the SoC (MPU or Firewall)
  - 8-16 programmable regions
    - Enable/Privilege ID
    - Start/End Address
    - Read/Write/Cachable
    - Secure/Non-Secure
- Cryptographic Acceleration
  - Cryptographic cores with DMA Support
  - AES - 128/192/256-bit key sizes
  - SHA2 - 256/384/512-bit support
  - DRBG with pseudo and true random number generator
  - PKA (public key accelerator) to assist in RSA/ECC processing

Functional Safety:

- Enables design of systems with functional safety requirements
  - Error Signaling Module (ESM) with designated SAFETY_ERRORn pin
  - ECC or parity on calculation-critical memories
  - Built-In Self-Test (BIST) and fault-injection for CPU and on-chip RAM
  - Runtime internal diagnostic modules including voltage, temperature, and clock monitoring, windowed watchdog timers, CRC engines for memory integrity checks
- Functional Safety-Compliant [Industrial]
  - Developed for functional safety applications
  - Documentation to be made available to aid IEC 61508 functional safety system design
  - Systematic capability up to SIL-3
  - Hardware integrity up to SIL-3
  - Safety-related certification
    - IEC 61508 certified up to SIL-3 by TUV SUD
- Functional Safety-Compliant [Automotive]
  - Developed for functional safety applications
  - Documentation to be made available to aid ISO 26262 functional safety system design
  - Systematic capability up to ASIL-D
  - Hardware integrity up to ASIL-D
  - Safety-related certification
    - ISO 26262 certified up to ASIL-D by TUV SUD

Technology / Package:

- AEC-Q100 qualified for automotive applications
- 45nm technology
- ZCZ Package
  - 324-pin NFBGA
  - 15.0mm x 15.0mm
  - 0.8mm pitch

2 Applications

- Single & Multi Axis Servo Drives
- AC Inverter & VF Drives
- Solar Energy
- EV Charging
- Renewable Energy Storage
- Traction Inverters
- Onboard Chargers
- DC-DC Converters
- Battery Management Systems
- Combo Box Architectures
- IO Aggregators
- Domain Controllers

Copyright © 2026 Texas Instruments Incorporated

3 Description

The AM263x Sitara™ Arm® Microcontrollers are built to meet the complex real-time processing needs of next generation industrial and automotive embedded products. The AM263x MCU family consists of multiple pin-to-pin compatible devices with up to four 400MHz Arm® Cortex®-R5F cores. As an option, the Arm® R5F subsystem can be programmed to run in lockstep or dual-core mode for multiple functional safety configurations. The industrial communications subsystem (PRU-ICSS) enables integrated industrial Ethernet communication protocols such as PROFINET®, Ethernet/IP®, EtherCAT® (among many others), standard Ethernet connectivity, and even custom I/O interfaces. The family is designed for the future of motor control and digital power applications with advanced analog sensing and digital actuation modules.

The multiple R5F cores are arranged in cluster subsystems with 256KB of shared tightly coupled memory (TCM) along with 2MB of shared SRAM, greatly reducing the need for external memory. Extensive ECC is included for on-chip memories, peripherals, and interconnects for enhanced reliability. Granular firewalls managed by the Hardware Security Manager (HSM) enable developers to implement stringent security-minded system design requirements. Cryptographic acceleration and secure boot are also available on AM263x devices.

TI provides a complete set of microcontroller software and development tools for the AM263x family of microcontrollers.

Package Information

PART NUMBER(1)(2)	PACKAGE	PACKAGE SIZE(3)
AM2634...ZCZ	ZCZ (nFBGA, 324)	15.0mm × 15.0mm
AM2632...ZCZ	ZCZ (nFBGA, 324)	15.0mm × 15.0mm
AM2631...ZCZ	ZCZ (nFBGA, 324)	15.0mm × 15.0mm
AM2634...ZCZQ1	ZCZQ1 (nFBGA, 324)	15.0mm × 15.0mm
AM2632...ZCZQ1	ZCZQ1 (nFBGA, 324)	15.0mm × 15.0mm
AM2631...ZCZQ1	ZCZQ1 (nFBGA, 324)	15.0mm × 15.0mm

(1) For more information, see Section 11.
(2) All devices are available in both tray or tape and reel packaging.
(3) The Package size (length x width) is a nominal value and includes pins, where applicable.

Copyright © 2026 Texas Instruments Incorporated

3.1 Functional Block Diagram

Figure 3-1 is the functional block diagram for the device.

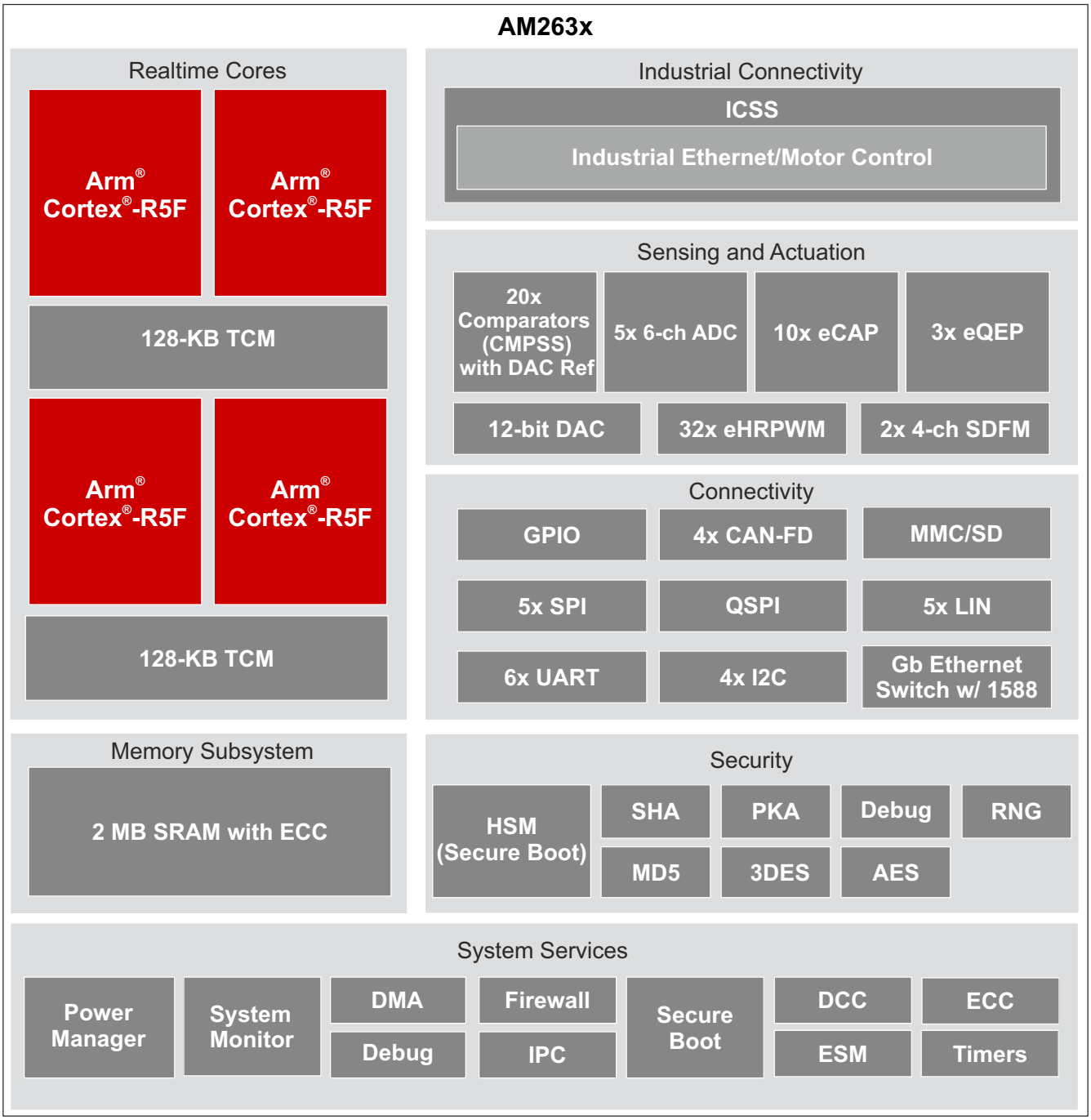

Figure 3-1. Functional Block Diagram

Copyright © 2026 Texas Instruments Incorporated

Table of Contents

1 Features....1
2 Applications....2
3 Description....3
3.1 Functional Block Diagram....4
4 Device Comparison....6
4.1 Related Products....7
5 Terminal Configuration and Functions....8
5.1 Pin Diagram....8
5.2 Pin Attributes....9
5.3 Signal Descriptions....35
5.4 Pin Connectivity Requirements....63
6 Specifications....64
6.1 Absolute Maximum Ratings....64
6.2 Electrostatic Discharge (ESD) Extended Automotive Ratings....65
6.3 Electrostatic Discharge (ESD) Industrial Ratings....65
6.4 Power-On Hours (POH) Summary....65
6.5 Recommended Operating Conditions....66
6.6 Operating Performance Points....66
6.7 Power Consumption Summary....67
6.8 Electrical Characteristics....68
6.9 VPP Specifications for One-Time Programmable (OTP) eFuses....74
6.10 Thermal Resistance Characteristics....75
6.11 Timing and Switching Characteristics....76
6.12 Decoupling Capacitor Requirements....149
7 Detailed Description....150
7.1 Overview....150
7.2 Processor Subsystems....151
8 Applications, Implementation, and Layout....152
8.1 Device Connection and Layout Fundamentals....152
9 Device and Documentation Support....153
9.1 Device Nomenclature....153
9.2 Tools and Software....158
9.3 Documentation Support....158
9.4 Support Resources....158
9.5 Trademarks....158
9.6 Electrostatic Discharge Caution....159
9.7 Glossary....159
10 Revision History....159
11 Mechanical, Packaging, and Orderable Information....160

4 Device Comparison

Table 4-1 shows a comparison between devices, highlighting the differences.

Table 4-1. Device Comparison

FEATURES	REFERENCE NAME	AM2634[1]	AM2632[1]	AM2631
JTAG DEVICE ID COMPARISON (FEATURES)				
JTAG Device ID[2]	Industrial:	M: 0x4111BBE6 L: 0x41119BE6 K: 0x41117BE6 E: 0x4110BBE6 D: 0x41109BE6	M: 0x4109BBE6 L: 0x41099BE6 K: 0x41097BE6 E: 0x4108BBA6 D: 0x41089BA6	E: 0x4104B3A6 D: 0x410493A6
	Extended Automotive:	K: 0x41117BFE D: 0x41109BFE (Grade O) D: 0x41109C3E (Grade P)	K: 0x41097BFE D: 0x41089BFE (Grade O) D: 0x41089C3E (Grade P)	D: 0x410493BE
PROCESSORS AND ACCELERATORS				
Speed Grade		See Section 6.6, *Operating Performance Points*		
Arm® Cortex-R5F	R5FSS	4	2	1
Hardware Security Module	HSM	Yes		
Crypto Accelerators	Security	Yes		
PROGRAM AND DATA STORAGE				
On-Chip Shared Memory (RAM)	OCSRAM	See Section 6.6, *Operating Performance Points*		
R5F Tightly Coupled Memory (TCM)	TCM	256KB[9]		
General-Purpose Memory Controller	GPMC	4MB		
PERIPHERALS				
Modular Controller Area Network Interface	MCAN	4		
Full CAN-FD Support	MCAN	4		
General-Purpose I/O	GPIO	Up to 139		
Serial Peripheral Interface	SPI	5		
Universal Asynchronous Receiver and Transmitter	UART	6		
Local Interconnect Network	LIN	5		
Inter-Integrated Circuit Interface	I2C	4		
Analog-to-Digital Converter	ADC	3[4] or 5[5]	3[4] or 5[5]	3
Comparator Modules	CMPSS	12[4] or 20[5]	12[4] or 20[5]	12
Digital-to-Analog Converter	DAC	1		
Programmable Real-Time Unit Subsystem[6]	PRU-ICSS	0 or 1		
Industrial Communication Subsystem Support[7]	PRU-ICSS	Optional		
Gigabit Ethernet Interface	CPSW	Yes (2-port)		
Multi-Media Card/Secure Digital Interface	MMCSD	1		
Enhanced High-Resolution Pulse-Width Modulator Module	EHRPWM	16[3] or 32[5]	16[4] or 32[5]	16
Enhanced Capture Module	ECAP	5[4] or 10[5]	5[4] or 10[5]	5
Enhanced Quadrature Encoder Pulse Module	EQEP	2[4] or 3[5]	2[4] or 3[5]	2
Sigma Delta Filter Module	SDFM	1[4] or 2[5]	1[4] or 2[5]	1
Fast Serial Interface	FSI	4x FSI_RX + 4x FSI_TX		
Quad SPI Flash Interface	QSPI	1		
				Miscellaneous
Junction Temperature		Industrial: –40°C to 105°C		
		Extended Automotive: –40°C to 150°C Automotive: –40°C to 125°C		
Automotive Qualification		AEC-Q100[8] Option		

(1) Developed for Functional Safety applications, the device supports hardware integrity upto ASIL-D or SIL-3. Refer to the related documentation for more details.
(2) "X:" letter refers to feature parameter and (Grade "X") refers to Grade in the Section 6.6, *Operating Performance Points* table.
(3) For more details about the CTRLMMR_WKUP_JTAG_DEVICE_ID register and DEVICE_ID bit field, see the device TRM.
(4) Standard Analog configuration contains 3x ADC, 16x EHRPWM, 5x eCAP, 2x EQEP, 1x SDFM, 12x CMPSS
(5) Enhanced Analog configuration contains 5x ADC, 32x EHRPWM, 10x eCAP, 3x EQEP, 2x SDFM, 20x CMPSS
(6) Programmable Real-Time Unit Subsystem is available when selecting an orderable part number that includes a feature code of D, E, F, K, L, or M. Refer to the Nomenclature Description table for definition of feature codes.
(7) Industrial Communication Subsystem Support is available when selecting an orderable part number that includes a feature code of D, E, F, K, L, or M. Refer to the Nomenclature Description table for definition of feature codes.

Copyright © 2026 Texas Instruments Incorporated

(8) AEC-Q100 qualification is applicable to select part number variants as indicated by the Automotive Designator (Q1) identifier in the Nomenclature Description table.
(9) Each R5FSS cluster supports 128KB of Tightly-Coupled Memory (TCM). When configured as Single-Core or Lockstep operating mode, individual cores can utilize the entire 128KB of TCM memory, while in Dual-Core mode, each core may only utilize its designated half (64KB TCM).

4.1 Related Products

Sitara™ Microcontrollers Family of Arm® Cortex®-R based high performance microcontrollers with advanced networking, real-time control, and signal processing accelerators to meet emerging MCU requirements for industrial and automotive applications.

Sitara™ Processors Family of broad, scalable processors based on Arm® Cortex®-A cores with flexible accelerators, peripherals, connectivity and unified software support – an excellent choice for sensors to servers. Sitara™ processors have the features and reliability necessary for the latest industrial and automotive application-level requirements.

Sitara™ Microcontrollers - Evaluation Modules TI provides device-specific Evaluation Module (EVM) designs to help kick-start product development. See the **AM263x ControlCard** and **AM263x LaunchPad** for more information.

Products to complete your design The following list of products are frequently purchased or used in conjunction with the AM263x device to meet your system design requirements.

- **TPS653850A-Q1** - Functional safety compliant multi-rail power supply for safety MCUs with 350mA I/O rail.
- **TPS3704-Q1** - Automotive multichannel window supervisor with very-high accuracy and compact form factor.
- **DP83TG720S-Q1** - 1000BASE-T1 automotive Ethernet PHY with RGMII.
- **DP83826E** - Low latency 10/100-Mbps Ethernet PHY with MII interface and enhanced mode.
- **TCAN1042H-Q1** - Automotive 70-V bus-fault-protected CAN transceiver with flexible data-rate.

Copyright © 2026 Texas Instruments Incorporated

5 Terminal Configuration and Functions

5.1 Pin Diagram

Note

The terms "ball", "pin", and "terminal" are used interchangeably throughout the document. An attempt is made to use "ball" only when referring to the physical package.

The diagrams in this section are used in conjunction with the other Terminal Configuration and Functions tables to locate signal names and ball grid numbers. The HTML version of this document (AM2634 Datasheet) provides additional information when hovering your cursor over a ball.

5.1.1 ZCZ Pin Diagram

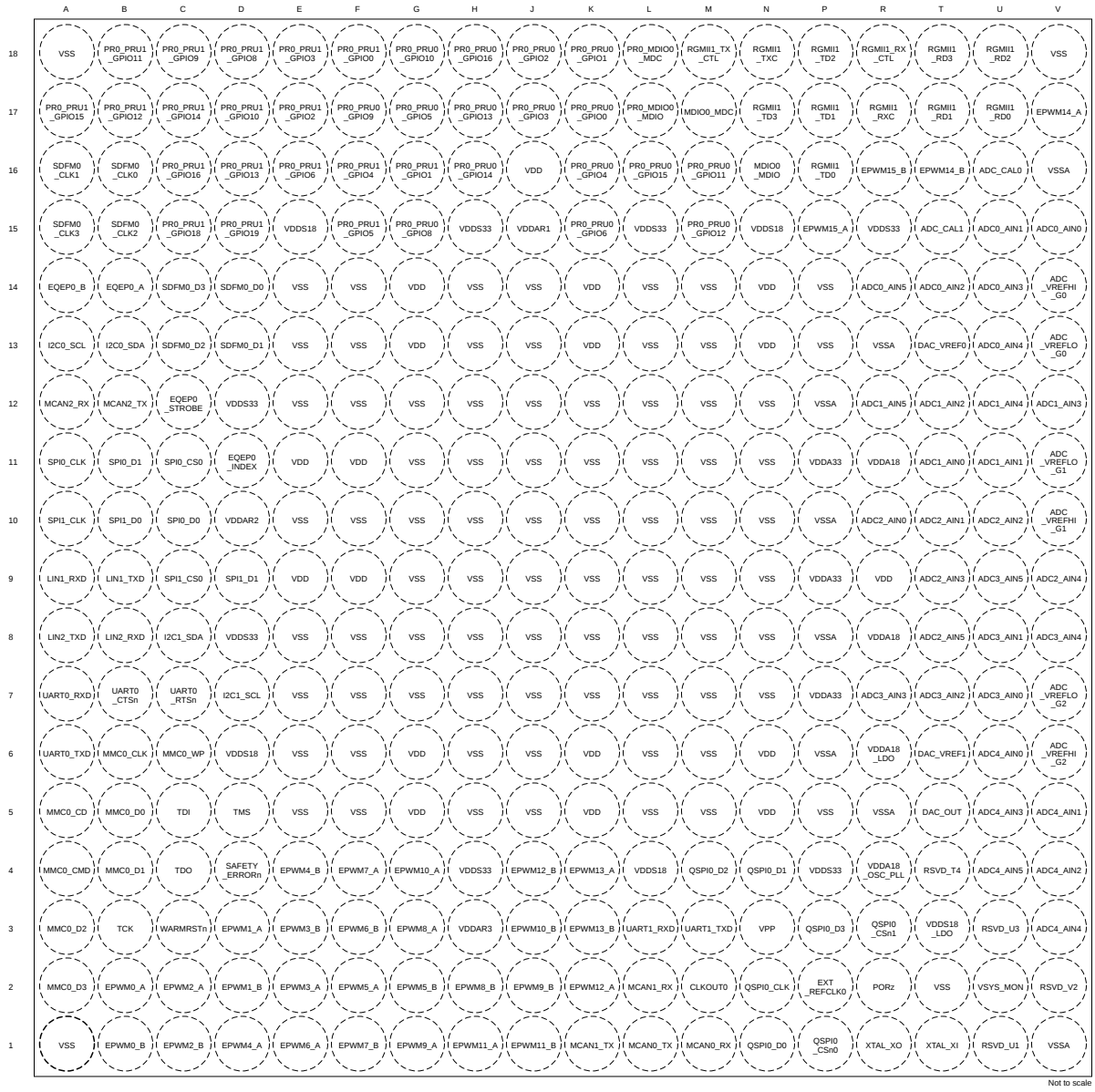

Copyright © 2026 Texas Instruments Incorporated

5.2 Pin Attributes

The following list describes the contents of each column in the *Pin Attributes* table:

1. **Ball Number:** Ball numbers assigned to each terminal of the Ball Grid Array package.
2. **Ball Name:** Ball name assigned to each terminal of the Ball Grid Array package (this name is typically taken from the primary MUXMODE 0 signal function).
3. **Signal Name:** Signal name of all dedicated and pin multiplexed signal functions associated with a ball.

Note

The *Pin Attributes* table, defines the SoC pin multiplexed signal function implemented at the pin and **does not** define secondary multiplexing of signal functions implemented in device subsystems. Secondary multiplexing of signal functions are not described in this table. For more information on secondary multiplexed signal functions, see the respective peripheral chapter of the device TRM.

4. **Mux Mode:** The MUXMODE value associated with each pin multiplexed signal function:
   - MUXMODE 0 is the primary pin multiplexed signal function. However, the primary pin multiplexed signal function is not necessarily the default pin multiplexed signal function.
   - MUXMODE values 1 through 15 are possible for pin multiplexed signal functions. However, not all MUXMODE values have been implemented. The only valid MUXMODE values are those defined as pin multiplexed signal functions within the Pin Attributes table. Only defined valid values of MUXMODE can be used.
   - Bootstrap defines SOC configuration pins, where the logic state applied to each pin is latched on the rising edge of PORz. These input signal functions are fixed to their respective pins and are not programmable via MUXMODE.
   - An empty box or "-" means Not Applicable.

Note

- The value found in the MUX MODE AFTER RESET column defines the default pin multiplexed signal function selected when PORz is deasserted.
- Configuring two pins to the same pin multiplexed signal function can yield unexpected results and is not supported. This can be prevented with proper software configuration.
- Configuring a pad to an undefined multiplexing mode results in undefined behavior and must be avoided.

5. **Type:** Signal type and direction:
   - I = Input
   - O = Output
   - ID = Input, with open-drain output function
   - OD = Output, with open-drain output function
   - IO = Input, Output, or simultaneously Input and Output
   - IOD = Input, Output, or simultaneously Input and Output, with open-drain output function
   - IOZ = Input, Output, or simultaneously Input and Output, with three-state output function
   - OZ = Output with three-state output function
   - A = Analog
   - CAP = LDO capacitor
   - PWR = Power
   - GND = Ground
6. **DSIS:** The deselected input state (DSIS) indicates the state driven to the subsystem input (logic "0", logic "1", or "pad" level) when the pin multiplexed signal function is not selected by MUXMODE.
   - 0: **Logic 0** driven to the subsystem input.
   - 1: **Logic 1** driven to the subsystem input.
   - pad: Logic state of the pad is driven to the subsystem input.

Copyright © 2026 Texas Instruments Incorporated

- An empty box, NA, or "-" means Not Applicable.

7. **Ball State During Reset (RX/TX/PULL):** State of the terminal while PORz or WARMRSTn is asserted, where RX defines the state of the input buffer, TX defines the state of the output buffer, and PULL defines the state of internal pull resistors:
   - RX (Input buffer)
     - Off: The input buffer is **disabled**.
     - On: The input buffer is **enabled**.
   - TX (Output buffer)
     - Off: The output buffer is **disabled**.
     - Low: The output buffer is **enabled** and drives V_{OL}.
   - PULL (Internal pull resistors)
     - Off: Internal pull resistors are turned **off.**
     - Up: Internal **pull-up** resistor is turned on.
     - Down: Internal **pull-down** resistor is turned on.
     - NA: No internal pull resistor.
   - An empty box, or "-" means Not Applicable.
8. **Ball State After Reset (RX/TX/PULL):** State of the terminal after PORz or WARMRSTn is deasserted, where RX defines the state of the input buffer, TX defines the state of the output buffer, and PULL defines the state of internal pull resistors:
   - RX (Input buffer)
     - Off: The input buffer is **disabled**.
     - On: The input buffer is **enabled**.
   - TX (Output buffer)
     - Off: The output buffer is **disabled**.
     - SS: The subsystem selected with MUXMODE determines the output buffer state.
   - PULL (Internal pull resistors)
     - Off: Internal pull resistors are turned **off.**
     - Up: Internal **pull-up resistor** is turned on.
     - Down: Internal **pull-down resistor** is turned on.
     - NA: No internal pull resistor.
   - An empty box, NA, or "-" means Not Applicable.
9. **Mux Mode After Reset:** The value found in this column defines the **default** pin multiplexed signal function after PORz is deasserted.
   - An empty box, NA, or "-" means Not Applicable.
10. **I/O Voltage**: This column describes I/O **operating voltage** options of the respective power supply, when applicable.
    - An empty box, NA, or "-" means Not Applicable.

    For more information, see valid operating voltage range defined for each power supply in *Recommended Operating Conditions*.
11. **Power:** The power supply of the associated I/O, when applicable.
    - An empty box, NA, or "-" means Not Applicable.
12. **Hys:** Indicates if the input buffer associated with this I/O has hysteresis:
    - Yes: Hysteresis Support
    - No: **No** Hysteresis Support
    - An empty box, NA, or "-" means Not Applicable.

    For more information, see the hysteresis values in *Electrical Characteristics*.
13. **Pull Type:** Indicates the presence of an internal pull-up or pull-down resistor. Internal resistors can be enabled or disabled via software.
    - PU: Internal pull-up Only

Copyright © 2026 Texas Instruments Incorporated

- PD: Internal pull-down Only
- PU/PD: Internal pull-up and pull-down
- An empty box, NA, or "-" means No internal pull.

Note

Configuring two pins to the same pin multiplexed signal function is not supported as this yields unexpected results. Issues can be easily prevented with the proper software configuration.

When a pad is set into a multiplexing mode which is not defined by pin multiplexing, that pad's behavior is undefined. This must be avoided.

14. **Buffer Type:** This column defines the buffer type associated with a terminal. This information can be used to determine the applicable Electrical Characteristics table.
    - An empty box, NA, or "-" means Not Applicable.

    For electrical characteristics, refer to the appropriate buffer type table in *Electrical Characteristics*.
15. **Pad Configuration Register Name:** This is the name of the device pad/pin configuration register.
16. **Pad Configuration Register Address:** This is the memory address of the device pad/pin configuration register.
17. **Pad Configuration Register Default Value**: This is the default value of the register device pad/pin configuration register after PORz is deasserted.

Table 5-1. Pin Attributes (ZCZ Package)

BALL NUMBER [1]	BALL NAME [2]/ IOMUX REGISTER [15]/ ADDRESS [16]/ DEFAULT VALUE [17]	SIGNAL NAME [3]	MUX MODE [4]	TYPE [5]	BALL STATE DURING RESET RX/TX/PULL [7]	BALL STATE AFTER RESET RX/TX/PULL [8]	MUX MODE AFTER RESET [9]	IO VOLTAGE [10]	POWER [11]	HYS [12]	BUFFER TYPE [14]	PULL TYPE [13]
V15	ADC0_AIN0	ADC0_AIN0		I				3.3V	VDDA_CIO		AnalogCIO	
U15	ADC0_AIN1	ADC0_AIN1		I				3.3V	VDDA_CIO		AnalogCIO	
T14	ADC0_AIN2	ADC0_AIN2		I				3.3V	VDDA_CIO		AnalogCIO	
U14	ADC0_AIN3	ADC0_AIN3		I				3.3V	VDDA_CIO		AnalogCIO	
U13	ADC0_AIN4	ADC0_AIN4		I				3.3V	VDDA_CIO		AnalogCIO	
R14	ADC0_AIN5	ADC0_AIN5		I				3.3V	VDDA_CIO		AnalogCIO	
T11	ADC1_AIN0	ADC1_AIN0		I				3.3V	VDDA_CIO		AnalogCIO	
U11	ADC1_AIN1	ADC1_AIN1		I				3.3V	VDDA_CIO		AnalogCIO	
T12	ADC1_AIN2	ADC1_AIN2		I				3.3V	VDDA_CIO		AnalogCIO	
V12	ADC1_AIN3	ADC1_AIN3		I				3.3V	VDDA_CIO		AnalogCIO	
U12	ADC1_AIN4	ADC1_AIN4		I				3.3V	VDDA_CIO		AnalogCIO	
R12	ADC1_AIN5	ADC1_AIN5		I				3.3V	VDDA_CIO		AnalogCIO	
R10	ADC2_AIN0	ADC2_AIN0		I				3.3V	VDDA_CIO		AnalogCIO	
T10	ADC2_AIN1	ADC2_AIN1		I				3.3V	VDDA_CIO		AnalogCIO	
U10	ADC2_AIN2	ADC2_AIN2		I				3.3V	VDDA_CIO		AnalogCIO	
T9	ADC2_AIN3	ADC2_AIN3		I				3.3V	VDDA_CIO		AnalogCIO	
V9	ADC2_AIN4	ADC2_AIN4		I				3.3V	VDDA_CIO		AnalogCIO	
T8	ADC2_AIN5	ADC2_AIN5		I				3.3V	VDDA_CIO		AnalogCIO	
U7	ADC3_AIN0	ADC3_AIN0		I				3.3V	VDDA_CIO		AnalogCIO	
U8	ADC3_AIN1	ADC3_AIN1		I				3.3V	VDDA_CIO		AnalogCIO	
T7	ADC3_AIN2	ADC3_AIN2		I				3.3V	VDDA_CIO		AnalogCIO	
R7	ADC3_AIN3	ADC3_AIN3		I				3.3V	VDDA_CIO		AnalogCIO	
V8	ADC3_AIN4	ADC3_AIN4		I				3.3V	VDDA_CIO		AnalogCIO	
U9	ADC3_AIN5	ADC3_AIN5		I				3.3V	VDDA_CIO		AnalogCIO	
U6	ADC4_AIN0	ADC4_AIN0		I				3.3V	VDDA_CIO		AnalogCIO	
V5	ADC4_AIN1	ADC4_AIN1		I				3.3V	VDDA_CIO		AnalogCIO	
V4	ADC4_AIN2	ADC4_AIN2		I				3.3V	VDDA_CIO		AnalogCIO	
U5	ADC4_AIN3	ADC4_AIN3		I				3.3V	VDDA_CIO		AnalogCIO	
V3	ADC4_AIN4	ADC4_AIN4		I				3.3V	VDDA_CIO		AnalogCIO	
U4	ADC4_AIN5	ADC4_AIN5		I				3.3V	VDDA_CIO		AnalogCIO	
U16	ADC_CAL0	ADC_CAL0		I				3.3V	VDDA_CIO		AnalogCIO	
T15	ADC_CAL1	ADC_CAL1		I				3.3V	VDDA_CIO		AnalogCIO	
V14	ADC_VREFHI_G0	ADC_VREFHI_G0		A				1.8V	VDDA_CIO		AnalogCIO	
V10	ADC_VREFHI_G1	ADC_VREFHI_G1		A				1.8V	VDDA_CIO		AnalogCIO	
V6	ADC_VREFHI_G2	ADC_VREFHI_G2		A				1.8V	VDDA_CIO		AnalogCIO	
V13	ADC_VREFLO_G0	ADC_VREFLO_G0		A				1.8V	VDDA_CIO		AnalogCIO	
V11	ADC_VREFLO_G1	ADC_VREFLO_G1		A				1.8V	VDDA_CIO		AnalogCIO	

Copyright © 2026 Texas Instruments Incorporated

Table 5-1. Pin Attributes (ZCZ Package) (continued)

BALL NUMBER [1]	BALL NAME [2]/ IOMUX REGISTER [15]/ ADDRESS [16]/ DEFAULT VALUE [17]	SIGNAL NAME [3]	MUX MODE [4]	TYPE [5]	BALL STATE DURING RESET RX/TX/PULL [7]	BALL STATE AFTER RESET RX/TX/PULL [8]	MUX MODE AFTER RESET [9]	IO VOLTAGE [10]	POWER [11]	HYS [12]	BUFFER TYPE [14]	PULL TYPE [13]
V7	ADC_VREFLO_G2	ADC_VREFLO_G2		A				1.8V	VDDA_CIO		AnalogCIO	
M2	CLKOUT0	CLKOUT0	0	O	Off / Off / Off	Off / SS / Off	0	3.3V	VDDSHV0	Yes	LVCMOS	PU/PD
	CLKOUT0_CFG_REG 0x5310 0228 0x0000 0570	GPIO138	7	IO								
T5	DAC_OUT	DAC_OUT		O				3.3V	VDDA_CIO		AnalogCIO	
T13	DAC_VREF0	DAC_VREF0		A				3.3V	VDDA_CIO		AnalogCIO	
T6	DAC_VREF1	DAC_VREF1		A				3.3V	VDDA_CIO		AnalogCIO	
B2	EPWM0_A	EPWM0_A	0	O	Off / Off / Off	Off / Off / Off	7	3.3V	VDDSHV0	Yes	LVCMOS	PU/PD
	EPWM0_A_CFG_REG 0x5310 00AC 0x0000 05F7	GPIO43	7	IO								
B1	EPWM0_B	EPWM0_B	0	O	Off / Off / Off	Off / Off / Off	7	3.3V	VDDSHV0	Yes	LVCMOS	PU/PD
	EPWM0_B_CFG_REG 0x5310 00B0 0x0000 05F7	GPIO44	7	IO								
D3	EPWM1_A	EPWM1_A	0	O	Off / Off / Off	Off / Off / Off	7	3.3V	VDDSHV0	Yes	LVCMOS	PU/PD
	EPWM1_A_CFG_REG 0x5310 00B4 0x0000 05F7	GPIO45	7	IO								
D2	EPWM1_B	EPWM1_B	0	O	Off / Off / Off	Off / Off / Off	7	3.3V	VDDSHV0	Yes	LVCMOS	PU/PD
	EPWM1_B_CFG_REG 0x5310 00B8 0x0000 05F7	GPIO46	7	IO								
C2	EPWM2_A	EPWM2_A	0	O	Off / Off / Off	Off / Off / Off	7	3.3V	VDDSHV0	Yes	LVCMOS	PU/PD
	EPWM2_A_CFG_REG 0x5310 00BC 0x0000 05F7	GPIO47	7	IO								
C1	EPWM2_B	EPWM2_B	0	O	Off / Off / Off	Off / Off / Off	7	3.3V	VDDSHV0	Yes	LVCMOS	PU/PD
	EPWM2_B_CFG_REG 0x5310 00C0 0x0000 05F7	GPIO48	7	IO								
E2	EPWM3_A	EPWM3_A	0	O	Off / Off / Off	Off / Off / Off	7	3.3V	VDDSHV0	Yes	LVCMOS	PU/PD
	EPWM3_A_CFG_REG 0x5310 00C4 0x0000 05F7	GPIO49	7	IO								
E3	EPWM3_B	EPWM3_B	0	O	Off / Off / Off	Off / Off / Off	7	3.3V	VDDSHV0	Yes	LVCMOS	PU/PD
	EPWM3_B_CFG_REG 0x5310 00C8 0x0000 05F7	GPIO50	7	IO								
D1	EPWM4_A	EPWM4_A	0	O	Off / Off / Off	Off / Off / Off	7	3.3V	VDDSHV0	Yes	LVCMOS	PU/PD
	EPWM4_A_CFG_REG 0x5310 00CC 0x0000 05F7	GPIO51	7	IO								

Copyright © 2026 Texas Instruments Incorporated

Table 5-1. Pin Attributes (ZCZ Package) (continued)

BALL NUMBER [1]	BALL NAME [2]/ IOMUX REGISTER [15]/ ADDRESS [16]/ DEFAULT VALUE [17]	SIGNAL NAME [3]	MUX MODE [4]	TYPE [5]	BALL STATE DURING RESET RX/TX/PULL [7]	BALL STATE AFTER RESET RX/TX/PULL [8]	MUX MODE AFTER RESET [9]	IO VOLTAGE [10]	POWER [11]	HYS [12]	BUFFER TYPE [14]	PULL TYPE [13]
E4	EPWM4_B	EPWM4_B	0	O	Off / Off / Off	Off / Off / Off	7	3.3V	VDDSHV0	Yes	LVCMOS	PU/PD
	EPWM4_B_CFG_REG 0x5310 00D0 0x0000 05F7	FSITX1_CLK	6	O								
		GPIO52	7	IO								
F2	EPWM5_A	EPWM5_A	0	O	Off / Off / Off	Off / Off / Off	7	3.3V	VDDSHV0	Yes	LVCMOS	PU/PD
	EPWM5_A_CFG_REG 0x5310 00D4 0x0000 05F7	FSITX1_DATA0	6	O								
		GPIO53	7	IO								
G2	EPWM5_B	EPWM5_B	0	O	Off / Off / Off	Off / Off / Off	7	3.3V	VDDSHV0	Yes	LVCMOS	PU/PD
	EPWM5_B_CFG_REG 0x5310 00D8 0x0000 05F7	FSITX1_DATA1	6	O								
		GPIO54	7	IO								
E1	EPWM6_A	EPWM6_A	0	O	Off / Off / Off	Off / Off / Off	7	3.3V	VDDSHV0	Yes	LVCMOS	PU/PD
	EPWM6_A_CFG_REG 0x5310 00DC 0x0000 05F7	FSIRX1_CLK	6	I								
		GPIO55	7	IO								
F3	EPWM6_B	EPWM6_B	0	O	Off / Off / Off	Off / Off / Off	7	3.3V	VDDSHV0	Yes	LVCMOS	PU/PD
	EPWM6_B_CFG_REG 0x5310 00E0 0x0000 05F7	FSIRX1_DATA0	6	I								
		GPIO56	7	IO								
F4	EPWM7_A	EPWM7_A	0	O	Off / Off / Off	Off / Off / Off	7	3.3V	VDDSHV0	Yes	LVCMOS	PU/PD
	EPWM7_A_CFG_REG 0x5310 00E4 0x0000 05F7	FSIRX1_DATA1	6	I								
		GPIO57	7	IO								
F1	EPWM7_B	EPWM7_B	0	O	Off / Off / Off	Off / Off / Off	7	3.3V	VDDSHV0	Yes	LVCMOS	PU/PD
	EPWM7_B_CFG_REG 0x5310 00E8 0x0000 05F7	GPIO58	7	IO								
G3	EPWM8_A	EPWM8_A	0	O	Off / Off / Off	Off / Off / Off	7	3.3V	VDDSHV0	Yes	LVCMOS	PU/PD
	EPWM8_A_CFG_REG 0x5310 00EC 0x0000 05F7	UART4_TXD	1	O								
		I2C3_SDA	2	IOD								
		FSITX2_CLK	6	O								
		GPIO59	7	IO								
H2	EPWM8_B	EPWM8_B	0	O	Off / Off / Off	Off / Off / Off	7	3.3V	VDDSHV0	Yes	LVCMOS	PU/PD
	EPWM8_B_CFG_REG 0x5310 00F0 0x0000 05F7	UART4_RXD	1	I								
		I2C3_SCL	2	IOD								
		FSITX2_DATA0	6	O								
		GPIO60	7	IO								
G1	EPWM9_A	EPWM9_A	0	O	Off / Off / Off	Off / Off / Off	7	3.3V	VDDSHV0	Yes	LVCMOS	PU/PD
	EPWM9_A_CFG_REG 0x5310 00F4 0x0000 05F7	FSITX2_DATA1	6	O								
		GPIO61	7	IO								

Copyright © 2026 Texas Instruments Incorporated

Table 5-1. Pin Attributes (ZCZ Package) (continued)

BALL NUMBER [1]	BALL NAME [2]/ IOMUX REGISTER [15]/ ADDRESS [16]/ DEFAULT VALUE [17]	SIGNAL NAME [3]	MUX MODE [4]	TYPE [5]	BALL STATE DURING RESET RX/TX/PULL [7]	BALL STATE AFTER RESET RX/TX/PULL [8]	MUX MODE AFTER RESET [9]	IO VOLTAGE [10]	POWER [11]	HYS [12]	BUFFER TYPE [14]	PULL TYPE [13]
J2	EPWM9_B EPWM9_B_CFG_REG 0x5310 00F8 0x0000 05F7	EPWM9_B	0	O	Off / Off / Off	Off / Off / Off	7	3.3V	VDDSHV0	Yes	LVCMOS	PU/PD
		UART1_RTSn	1	O								
		FSIRX2_CLK	6	I								
		GPIO62	7	IO								
G4	EPWM10_A EPWM10_A_CFG_REG 0x5310 00FC 0x0000 05F7	EPWM10_A	0	O	Off / Off / Off	Off / Off / Off	7	3.3V	VDDSHV0	Yes	LVCMOS	PU/PD
		UART1_CTSn	1	I								
		FSIRX2_DATA0	6	I								
		GPIO63	7	IO								
J3	EPWM10_B EPWM10_B_CFG_REG 0x5310 0100 0x0000 05F7	EPWM10_B	0	O	Off / Off / Off	Off / Off / Off	7	3.3V	VDDSHV0	Yes	LVCMOS	PU/PD
		UART2_RTSn	1	O								
		FSIRX2_DATA1	6	I								
		GPIO64	7	IO								
H1	EPWM11_A EPWM11_A_CFG_REG 0x5310 0104 0x0000 05F7	EPWM11_A	0	O	Off / Off / Off	Off / Off / Off	7	3.3V	VDDSHV0	Yes	LVCMOS	PU/PD
		UART2_CTSn	1	I								
		GPMC0_CLKLB	6	IO								
		GPIO65	7	IO								
J1	EPWM11_B EPWM11_B_CFG_REG 0x5310 0108 0x0000 05F7	EPWM11_B	0	O	Off / Off / Off	Off / Off / Off	7	3.3V	VDDSHV0	Yes	LVCMOS	PU/PD
		UART3_RTSn	1	O								
		GPMC0_OEn_REn	6	O								
		GPIO66	7	IO								
K2	EPWM12_A EPWM12_A_CFG_REG 0x5310 010C 0x0000 05F7	EPWM12_A	0	O	Off / Off / Off	Off / Off / Off	7	3.3V	VDDSHV0	Yes	LVCMOS	PU/PD
		UART3_CTSn	1	I								
		SPI4_CS1	2	IO								
		GPMC0_WEn	6	O								
		GPIO67	7	IO								
J4	EPWM12_B EPWM12_B_CFG_REG 0x5310 0110 0x0000 05F7	EPWM12_B	0	O	Off / Off / Off	Off / Off / Off	7	3.3V	VDDSHV0	Yes	LVCMOS	PU/PD
		UART1_DCDn	1	I								
		GPMC0_CSn0	6	O								
		GPIO68	7	IO								
K4	EPWM13_A EPWM13_A_CFG_REG 0x5310 0114 0x0000 05F7	EPWM13_A	0	O	Off / Off / Off	Off / Off / Off	7	3.3V	VDDSHV0	Yes	LVCMOS	PU/PD
		UART1_RIn	1	I								
		GPMC0_AD0	6	IO								
		GPIO69	7	IO								
K3	EPWM13_B EPWM13_B_CFG_REG 0x5310 0118 0x0000 05F7	EPWM13_B	0	O	Off / Off / Off	Off / Off / Off	7	3.3V	VDDSHV0	Yes	LVCMOS	PU/PD
		UART1_DTRn	1	O								
		GPMC0_AD1	6	IO								
		GPIO70	7	IO								

Copyright © 2026 Texas Instruments Incorporated

Table 5-1. Pin Attributes (ZCZ Package) (continued)

BALL NUMBER [1]	BALL NAME [2]/ IOMUX REGISTER [15]/ ADDRESS [16]/ DEFAULT VALUE [17]	SIGNAL NAME [3]	MUX MODE [4]	TYPE [5]	BALL STATE DURING RESET RX/TX/PULL [7]	BALL STATE AFTER RESET RX/TX/PULL [8]	MUX MODE AFTER RESET [9]	IO VOLTAGE [10]	POWER [11]	HYS [12]	BUFFER TYPE [14]	PULL TYPE [13]
V17	EPWM14_A EPWM14_A_CFG_REG 0x5310 011C 0x0000 05F7	EPWM14_A	0	O	Off / Off / Off	Off / Off / Off	7	3.3V	VDDSHV0	Yes	LVCMOS	PU/PD
		UART1_DSRn	1	I								
		GPMC0_AD2	6	IO								
		GPIO71	7	IO								
T16	EPWM14_B EPWM14_B_CFG_REG 0x5310 0120 0x0000 05F7	EPWM14_B	0	O	Off / Off / Off	Off / Off / Off	7	3.3V	VDDSHV0	Yes	LVCMOS	PU/PD
		MII1_RX_ER	2	I								
		GPMC0_AD3	6	IO								
		GPIO72	7	IO								
P15	EPWM15_A EPWM15_A_CFG_REG 0x5310 0124 0x0000 05F7	EPWM15_A	0	O	Off / Off / Off	Off / Off / Off	7	3.3V	VDDSHV0	Yes	LVCMOS	PU/PD
		UART5_TXD	1	O								
		MII1_COL	2	I								
		GPMC0_AD4	6	IO								
		GPIO73	7	IO								
R16	EPWM15_B EPWM15_B_CFG_REG 0x5310 0128 0x0000 05F7	EPWM15_B	0	O	Off / Off / Off	Off / Off / Off	7	3.3V	VDDSHV0	Yes	LVCMOS	PU/PD
		UART5_RXD	1	I								
		MII1_CRS	2	I								
		GPMC0_AD5	6	IO								
		GPIO74	7	IO								
B14	EQEP0_A EQEP0_A_CFG_REG 0x5310 0208 0x0000 05F7	UART4_RTSn	0	O	Off / Off / Off	Off / Off / Off	7	3.3V	VDDSHV0	Yes	LVCMOS	PU/PD
		SPI4_CLK	3	IO								
		GPIO130	7	IO								
		EQEP0_A	8	I								
		SDFM1_CLK0	9	I								
A14	EQEP0_B EQEP0_B_CFG_REG 0x5310 020C 0x0000 05F7	UART4_CTSn	0	I	Off / Off / Off	Off / Off / Off	7	3.3V	VDDSHV0	Yes	LVCMOS	PU/PD
		SPI4_CS0	3	IO								
		GPIO131	7	IO								
		EQEP0_B	8	I								
		SDFM1_D0	9	I								
D11	EQEP0_INDEX EQEP0_INDEX_CFG_REG 0x5310 0214 0x0000 05F7	UART4_RXD	0	I	Off / Off / Off	Off / Off / Off	7	3.3V	VDDSHV0	Yes	LVCMOS	PU/PD
		LIN4_RXD	1	IO								
		SPI4_D1	3	IO								
		GPIO133	7	IO								
		EQEP0_INDEX	8	IO								
		SDFM1_D1	9	I								

Copyright © 2026 Texas Instruments Incorporated

Table 5-1. Pin Attributes (ZCZ Package) (continued)

BALL NUMBER [1]	BALL NAME [2]/ IOMUX REGISTER [15]/ ADDRESS [16]/ DEFAULT VALUE [17]	SIGNAL NAME [3]	MUX MODE [4]	TYPE [5]	BALL STATE DURING RESET RX/TX/PULL [7]	BALL STATE AFTER RESET RX/TX/PULL [8]	MUX MODE AFTER RESET [9]	IO VOLTAGE [10]	POWER [11]	HYS [12]	BUFFER TYPE [14]	PULL TYPE [13]
C12	EQEP0_STROBE EQEP0_STROBE_CFG_REG 0x5310 0210 0x0000 05F7	UART4_TXD	0	O	Off / Off / Off	Off / Off / Off	7	3.3V	VDDSHV0	Yes	LVCMOS	PU/PD
		LIN4_TXD	1	IO								
		SPI4_D0	3	IO								
		GPIO132	7	IO								
		EQEP0_STROBE	8	IO								
		SDFM1_CLK1	9	I								
P2	EXT_REFCLK0 EXT_REFCLK0_CFG_REG 0x5310 01E4 0x0000 05F7	EXT_REFCLK0	0	I	Off / Off / Off	Off / Off / Off	7	3.3V	VDDSHV0	Yes	LVCMOS	PU/PD
		XBAROUT15	5	O								
		GPIO121	7	IO								
		EQEP1_INDEX	9	IO								
A13	I2C0_SCL I2C0_SCL_CFG_REG 0x5310 021C 0x0000 05F7	I2C0_SCL	0	IOD	Off / Off / Off	Off / Off / Off	7	3.3V	VDDSHV0	Yes	I2C OD	
		GPIO135	7	IOD								
		EQEP2_B	8	ID								
		SDFM1_CLK3	9	ID								
B13	I2C0_SDA I2C0_SDA_CFG_REG 0x5310 0218 0x0000 05F7	I2C0_SDA	0	IOD	Off / Off / Off	Off / Off / Off	7	3.3V	VDDSHV0	Yes	I2C OD	
		GPIO134	7	IOD								
		EQEP2_A	8	ID								
		SDFM1_CLK2	9	ID								
D7	I2C1_SCL I2C1_SCL_CFG_REG 0x5310 005C 0x0000 05F7	I2C1_SCL	0	IOD	Off / Off / Off	Off / Off / Off	7	3.3V	VDDSHV0	Yes	LVCMOS	PU/PD
		SPI3_CS0	2	IO								
		XBAROUT7	5	O								
		GPIO23	7	IO								
C8	I2C1_SDA I2C1_SDA_CFG_REG 0x5310 0060 0x0000 05F7	I2C1_SDA	0	IOD	Off / Off / Off	Off / Off / Off	7	3.3V	VDDSHV0	Yes	LVCMOS	PU/PD
		SPI3_CLK	2	IO								
		XBAROUT8	5	O								
		GPIO24	7	IO								
A9	LIN1_RXD LIN1_RXD_CFG_REG 0x5310 004C 0x0000 05F7	LIN1_RXD	0	IO	Off / Off / Off	Off / Off / Off	7	3.3V	VDDSHV0	Yes	LVCMOS	PU/PD
		UART1_RXD	1	I								
		SPI2_CS0	2	IO								
		XBAROUT5	5	O								
		GPIO19	7	IO								
B9	LIN1_TXD LIN1_TXD_CFG_REG 0x5310 0050 0x0000 05F7	LIN1_TXD	0	IO	Off / Off / Off	Off / Off / Off	7	3.3V	VDDSHV0	Yes	LVCMOS	PU/PD
		UART1_TXD	1	O								
		SPI2_CLK	2	IO								
		XBAROUT6	5	O								
		GPIO20	7	IO								

Copyright © 2026 Texas Instruments Incorporated

Table 5-1. Pin Attributes (ZCZ Package) (continued)

BALL NUMBER [1]	BALL NAME [2]/ IOMUX REGISTER [15]/ ADDRESS [16]/ DEFAULT VALUE [17]	SIGNAL NAME [3]	MUX MODE [4]	TYPE [5]	BALL STATE DURING RESET RX/TX/PULL [7]	BALL STATE AFTER RESET RX/TX/PULL [8]	MUX MODE AFTER RESET [9]	IO VOLTAGE [10]	POWER [11]	HYS [12]	BUFFER TYPE [14]	PULL TYPE [13]
B8	LIN2_RXD LIN2_RXD_CFG_REG 0x5310 0054 0x0000 05F7	LIN2_RXD	0	IO	Off / Off / Off	Off / Off / Off	7	3.3V	VDDSHV0	Yes	LVCMOS	PU/PD
		UART2_RXD	1	I								
		SPI2_D0	2	IO								
		GPIO21	7	IO								
A8	LIN2_TXD LIN2_TXD_CFG_REG 0x5310 0058 0x0000 05F7	LIN2_TXD	0	IO	Off / Off / Off	Off / Off / Off	7	3.3V	VDDSHV0	Yes	LVCMOS	PU/PD
		UART2_TXD	1	O								
		SPI2_D1	2	IO								
		GPIO22	7	IO								
M1	MCAN0_RX MCAN0_RX_CFG_REG 0x5310 001C 0x0000 05F7	MCAN0_RX	0	I	Off / Off / Off	Off / Off / Off	7	3.3V	VDDSHV0	Yes	LVCMOS	PU/PD
		SPI4_CS0	1	IO								
		GPIO7	7	IO								
L1	MCAN0_TX MCAN0_TX_CFG_REG 0x5310 0020 0x0000 05F7	MCAN0_TX	0	O	Off / Off / Off	Off / Off / Off	7	3.3V	VDDSHV0	Yes	LVCMOS	PU/PD
		SPI4_CLK	1	IO								
		GPIO8	7	IO								
L2	MCAN1_RX MCAN1_RX_CFG_REG 0x5310 0024 0x0000 05F7	MCAN1_RX	0	I	Off / Off / Off	Off / Off / Off	7	3.3V	VDDSHV0	Yes	LVCMOS	PU/PD
		SPI4_D0	1	IO								
		GPIO9	7	IO								
K1	MCAN1_TX MCAN1_TX_CFG_REG 0x5310 0028 0x0000 05F7	MCAN1_TX	0	O	Off / Off / Off	Off / Off / Off	7	3.3V	VDDSHV0	Yes	LVCMOS	PU/PD
		SPI4_D1	1	IO								
		GPIO10	7	IO								
A12	MCAN2_RX MCAN2_RX_CFG_REG 0x5310 0224 0x0000 05F7	MCAN2_RX	0	I	Off / Off / Off	Off / Off / Off	7	3.3V	VDDSHV0	Yes	LVCMOS	PU/PD
		UART2_RTSn	1	O								
		GPIO137	7	IO								
		EQEP2_INDEX	8	IO								
		SDFM1_D3	9	I								
B12	MCAN2_TX MCAN2_TX_CFG_REG 0x5310 0220 0x0000 05F7	MCAN2_TX	0	O	Off / Off / Off	Off / Off / Off	7	3.3V	VDDSHV0	Yes	LVCMOS	PU/PD
		UART1_RTSn	1	O								
		GPIO136	7	IO								
		EQEP2_STROBE	8	IO								
		SDFM1_D2	9	I								
M17	MDIO0_MDC MDIO0_MDC_CFG_REG 0x5310 00A8 0x0000 05F7	MDIO0_MDC	0	O	Off / Off / Off	Off / Off / Off	7	3.3V	VDDSHV0	Yes	LVCMOS	PU/PD
		GPIO42	7	IO								
N16	MDIO0_MDIO MDIO0_MDIO_CFG_REG 0x5310 00A4 0x0000 05F7	MDIO0_MDIO	0	IO	Off / Off / Off	Off / Off / Off	7	3.3V	VDDSHV0	Yes	LVCMOS	PU/PD
		GPIO41	7	IO								

Copyright © 2026 Texas Instruments Incorporated

Table 5-1. Pin Attributes (ZCZ Package) (continued)

BALL NUMBER [1]	BALL NAME [2]/ IOMUX REGISTER [15]/ ADDRESS [16]/ DEFAULT VALUE [17]	SIGNAL NAME [3]	MUX MODE [4]	TYPE [5]	BALL STATE DURING RESET RX/TX/PULL [7]	BALL STATE AFTER RESET RX/TX/PULL [8]	MUX MODE AFTER RESET [9]	IO VOLTAGE [10]	POWER [11]	HYS [12]	BUFFER TYPE [14]	PULL TYPE [13]
A5	MMC0_CD MMC0_CD_CFG_REG 0x5310 0150 0x0000 05F7	MMC0_CD	0	I	Off / Off / Off	Off / Off / Off	7	3.3V	VDDSHV0	Yes	LVCMOS	PU/PD
		UART0_CTSn	1	I								
		I2C2_SDA	2	IOD								
		EPWM20_B	5	O								
		GPMC0_AD15	6	IO								
		GPIO84	7	IO								
		SDFM1_D3	8	I								
B6	MMC0_CLK MMC0_CLK_CFG_REG 0x5310 0134 0x0000 05F7	MMC0_CLK	0	IO	Off / Off / Off	Off / Off / Off	7	3.3V	VDDSHV0	Yes	LVCMOS	PU/PD
		UART0_RXD	1	I								
		LIN0_RXD	2	IO								
		EPWM17_A	5	O								
		GPMC0_AD8	6	IO								
		GPIO77	7	IO								
		SDFM1_CLK0	8	I								
A4	MMC0_CMD MMC0_CMD_CFG_REG 0x5310 0138 0x0000 05F7	MMC0_CMD	0	IO	Off / Off / Off	Off / Off / Off	7	3.3V	VDDSHV0	Yes	LVCMOS	PU/PD
		UART0_TXD	1	O								
		LIN0_TXD	2	IO								
		EPWM17_B	5	O								
		GPMC0_AD9	6	IO								
		GPIO78	7	IO								
		SDFM1_D0	8	I								
C6	MMC0_WP MMC0_WP_CFG_REG 0x5310 014C 0x0000 05F7	MMC0_WP	0	I	Off / Off / Off	Off / Off / Off	7	3.3V	VDDSHV0	Yes	LVCMOS	PU/PD
		UART0_RTSn	1	O								
		I2C2_SCL	2	IOD								
		EPWM20_A	5	O								
		GPMC0_AD14	6	IO								
		GPIO83	7	IO								
		SDFM1_CLK3	8	I								
B5	MMC0_D0 MMC0_D0_CFG_REG 0x5310 013C 0x0000 05F7	MMC0_D0	0	IO	Off / Off / Off	Off / Off / Off	7	3.3V	VDDSHV0	Yes	LVCMOS	PU/PD
		UART2_RXD	1	I								
		I2C1_SCL	2	IOD								
		EPWM18_A	5	O								
		GPMC0_AD10	6	IO								
		GPIO79	7	IO								
		SDFM1_CLK1	8	I								

Copyright © 2026 Texas Instruments Incorporated

Table 5-1. Pin Attributes (ZCZ Package) (continued)

BALL NUMBER [1]	BALL NAME [2]/ IOMUX REGISTER [15]/ ADDRESS [16]/ DEFAULT VALUE [17]	SIGNAL NAME [3]	MUX MODE [4]	TYPE [5]	BALL STATE DURING RESET RX/TX/PULL [7]	BALL STATE AFTER RESET RX/TX/PULL [8]	MUX MODE AFTER RESET [9]	IO VOLTAGE [10]	POWER [11]	HYS [12]	BUFFER TYPE [14]	PULL TYPE [13]
B4	MMC0_D1 MMC0_D1_CFG_REG 0x5310 0140 0x0000 05F7	MMC0_D1	0	IO	Off / Off / Off	Off / Off / Off	7	3.3V	VDDSHV0	Yes	LVCMOS	PU/PD
		EPWM18_B	5	O								
		GPMC0_AD11	6	IO								
		GPIO80	7	IO								
		SDFM1_D1	8	I								
A3	MMC0_D2 MMC0_D2_CFG_REG 0x5310 0144 0x0000 05F7	MMC0_D2	0	IO	Off / Off / Off	Off / Off / Off	7	3.3V	VDDSHV0	Yes	LVCMOS	PU/PD
		UART2_TXD	1	O								
		I2C1_SDA	2	IOD								
		EPWM19_A	5	O								
		GPMC0_AD12	6	IO								
		GPIO81	7	IO								
		SDFM1_CLK2	8	I								
A2	MMC0_D3 MMC0_D3_CFG_REG 0x5310 0148 0x0000 05F7	MMC0_D3	0	IO	Off / Off / Off	Off / Off / Off	7	3.3V	VDDSHV0	Yes	LVCMOS	PU/PD
		UART3_RTSn	1	O								
		EPWM19_B	5	O								
		GPMC0_AD13	6	IO								
		GPIO82	7	IO								
		SDFM1_D2	8	I								
R2	PORz	PORz		I			0	3.3V	VDDSHV0	Yes	RESET	
L18	PR0_MDIO0_MDC PR0_MDIO0_MDC_CFG_REG 0x5310 0158 0x0000 05F7	PR0_MDIO0_MDC	0	O	Off / Off / Off	Off / Off / Off	7	3.3V	VDDSHV0	Yes	LVCMOS	PU/PD
		EPWM21_B	5	O								
		GPMC0_CSn3	6	O								
		GPIO86	7	IO								
L17	PR0_MDIO0_MDIO PR0_MDIO0_MDIO_CFG_REG 0x5310 0154 0x0000 05F7	PR0_MDIO0_MDIO	0	IO	Off / Off / Off	Off / Off / Off	7	3.3V	VDDSHV0	Yes	LVCMOS	PU/PD
		EPWM21_A	5	O								
		GPMC0_CSn2	6	O								
		GPIO85	7	IO								
K17	PR0_PRU0_GPIO0 PR0_PRU0_GPIO0_CFG_REG 0x5310 0174 0x0000 05F7	PR0_PRU0_GPIO0	0	IO	Off / Off / Off	Off / Off / Off	7	3.3V	VDDSHV0	Yes	LVCMOS	PU/PD
		RMII2_RXD0	2	I								
		RGMII2_RD0	3	I								
		MII2_RXD0	4	I								
		EPWM25_A	5	O								
		GPMC0_A1	6	O								
		GPIO93	7	IO								

Copyright © 2026 Texas Instruments Incorporated

Table 5-1. Pin Attributes (ZCZ Package) (continued)

BALL NUMBER [1]	BALL NAME [2]/ IOMUX REGISTER [15]/ ADDRESS [16]/ DEFAULT VALUE [17]	SIGNAL NAME [3]	MUX MODE [4]	TYPE [5]	BALL STATE DURING RESET RX/TX/PULL [7]	BALL STATE AFTER RESET RX/TX/PULL [8]	MUX MODE AFTER RESET [9]	IO VOLTAGE [10]	POWER [11]	HYS [12]	BUFFER TYPE [14]	PULL TYPE [13]
K18	PR0_PRU0_GPIO1 PR0_PRU0_GPIO1_CFG_REG 0x5310 0178 0x0000 05F7	PR0_PRU0_GPIO1	0	IO	Off / Off / Off	Off / Off / Off	7	3.3V	VDDSHV0	Yes	LVCMOS	PU/PD
		RMII2_RXD1	2	I								
		RGMII2_RD1	3	I								
		MII2_RXD1	4	I								
		EPWM25_B	5	O								
		GPMC0_A2	6	O								
		GPIO94	7	IO								
J18	PR0_PRU0_GPIO2 PR0_PRU0_GPIO2_CFG_REG 0x5310 017C 0x0000 05F7	PR0_PRU0_GPIO2	0	IO	Off / Off / Off	Off / Off / Off	7	3.3V	VDDSHV0	Yes	LVCMOS	PU/PD
		RGMII2_RD2	3	I								
		MII2_RXD2	4	I								
		EPWM26_A	5	O								
		GPMC0_A3	6	O								
		GPIO95	7	IO								
J17	PR0_PRU0_GPIO3 PR0_PRU0_GPIO3_CFG_REG 0x5310 0180 0x0000 05F7	PR0_PRU0_GPIO3	0	IO	Off / Off / Off	Off / Off / Off	7	3.3V	VDDSHV0	Yes	LVCMOS	PU/PD
		RGMII2_RD3	3	I								
		MII2_RXD3	4	I								
		EPWM26_B	5	O								
		GPMC0_A4	6	O								
		GPIO96	7	IO								
K16	PR0_PRU0_GPIO4 PR0_PRU0_GPIO4_CFG_REG 0x5310 0170 0x0000 05F7	PR0_PRU0_GPIO4	0	IO	Off / Off / Off	Off / Off / Off	7	3.3V	VDDSHV0	Yes	LVCMOS	PU/PD
		RGMII2_RX_CTL	3	I								
		MII2_RXDV	4	I								
		EPWM24_B	5	O								
		GPMC0_A0	6	O								
		GPIO92	7	IO								
G17	PR0_PRU0_GPIO5 PR0_PRU0_GPIO5_CFG_REG 0x5310 015C 0x0000 05F7	PR0_PRU0_GPIO5	0	IO	Off / Off / Off	Off / Off / Off	7	3.3V	VDDSHV0	Yes	LVCMOS	PU/PD
		RMII2_RX_ER	2	I								
		MII2_RX_ER	4	I								
		EPWM22_A	5	O								
		GPMC0_DIR	6	O								
		GPIO87	7	IO								

Copyright © 2026 Texas Instruments Incorporated

Table 5-1. Pin Attributes (ZCZ Package) (continued)

BALL NUMBER [1]	BALL NAME [2]/ IOMUX REGISTER [15]/ ADDRESS [16]/ DEFAULT VALUE [17]	SIGNAL NAME [3]	MUX MODE [4]	TYPE [5]	BALL STATE DURING RESET RX/TX/PULL [7]	BALL STATE AFTER RESET RX/TX/PULL [8]	MUX MODE AFTER RESET [9]	IO VOLTAGE [10]	POWER [11]	HYS [12]	BUFFER TYPE [14]	PULL TYPE [13]
K15	PR0_PRU0_GPIO6 PR0_PRU0_GPIO6_CFG_REG 0x5310 016C 0x0000 05F7	PR0_PRU0_GPIO6	0	IO	Off / Off / Off	Off / Off / Off	7	3.3V	VDDSHV0	Yes	LVCMOS	PU/PD
		RMII2_REF_CLK	2	IO								
		RGMII2_RXC	3	I								
		MII2_RXCLK	4	I								
		EPWM24_A	5	O								
		GPMC0_CSn1	6	O								
		GPIO91	7	IO								
G15	PR0_PRU0_GPIO8 PR0_PRU0_GPIO8_CFG_REG 0x5310 0168 0x0000 05F7	PR0_PRU0_GPIO8	0	IO	Off / Off / Off	Off / Off / Off	7	3.3V	VDDSHV0	Yes	LVCMOS	PU/PD
		EPWM23_B	5	O								
		GPMC0_WPn	6	O								
		GPIO90	7	IO								
F17	PR0_PRU0_GPIO9 PR0_PRU0_GPIO9_CFG_REG 0x5310 0160 0x0000 05F7	PR0_PRU0_GPIO9	0	IO	Off / Off / Off	Off / Off / Off	7	3.3V	VDDSHV0	Yes	LVCMOS	PU/PD
		PR0_UART0_CTSn	3	I								
		MII2_COL	4	I								
		EPWM22_B	5	O								
		GPMC0_CLK	6	IO								
		GPIO88	7	IO								
G18	PR0_PRU0_GPIO10 PR0_PRU0_GPIO10_CFG_REG 0x5310 0164 0x0000 05F7	PR0_PRU0_GPIO10	0	IO	Off / Off / Off	Off / Off / Off	7	3.3V	VDDSHV0	Yes	LVCMOS	PU/PD
		RMII2_CRS_DV	2	I								
		PR0_UART0_RTSn	3	O								
		MII2_CRS	4	I								
		EPWM23_A	5	O								
		GPMC0_WAIT0	6	I								
		GPIO89	7	IO								
M16	PR0_PRU0_GPIO11 PR0_PRU0_GPIO11_CFG_REG 0x5310 018C 0x0000 05F7	PR0_PRU0_GPIO11	0	IO	Off / Off / Off	Off / Off / Off	7	3.3V	VDDSHV0	Yes	LVCMOS	PU/PD
		RMII2_TXD0	2	O								
		RGMII2_TD0	3	O								
		MII2_TXD0	4	O								
		EPWM28_A	5	O								
		GPMC0_A7	6	O								
		GPIO99	7	IO								

Copyright © 2026 Texas Instruments Incorporated

Table 5-1. Pin Attributes (ZCZ Package) (continued)

BALL NUMBER [1]	BALL NAME [2]/ IOMUX REGISTER [15]/ ADDRESS [16]/ DEFAULT VALUE [17]	SIGNAL NAME [3]	MUX MODE [4]	TYPE [5]	BALL STATE DURING RESET RX/TX/PULL [7]	BALL STATE AFTER RESET RX/TX/PULL [8]	MUX MODE AFTER RESET [9]	IO VOLTAGE [10]	POWER [11]	HYS [12]	BUFFER TYPE [14]	PULL TYPE [13]
M15	PR0_PRU0_GPIO12 PR0_PRU0_GPIO12_CFG_REG 0x5310 0190 0x0000 05F7	PR0_PRU0_GPIO12	0	IO	Off / Off / Off	Off / Off / Off	7	3.3V	VDDSHV0	Yes	LVCMOS	PU/PD
		RMII2_TXD1	2	O								
		RGMII2_TD1	3	O								
		MII2_TXD1	4	O								
		EPWM28_B	5	O								
		GPMC0_A8	6	O								
		GPIO100	7	IO								
H17	PR0_PRU0_GPIO13 PR0_PRU0_GPIO13_CFG_REG 0x5310 0194 0x0000 05F7	PR0_PRU0_GPIO13	0	IO	Off / Off / Off	Off / Off / Off	7	3.3V	VDDSHV0	Yes	LVCMOS	PU/PD
		RGMII2_TD2	3	O								
		MII2_TXD2	4	O								
		EPWM29_A	5	O								
		GPMC0_A9	6	O								
		GPIO101	7	IO								
H16	PR0_PRU0_GPIO14 PR0_PRU0_GPIO14_CFG_REG 0x5310 0198 0x0000 05F7	PR0_PRU0_GPIO14	0	IO	Off / Off / Off	Off / Off / Off	7	3.3V	VDDSHV0	Yes	LVCMOS	PU/PD
		RGMII2_TD3	3	O								
		MII2_TXD3	4	O								
		EPWM29_B	5	O								
		GPMC0_A10	6	O								
		GPIO102	7	IO								
L16	PR0_PRU0_GPIO15 PR0_PRU0_GPIO15_CFG_REG 0x5310 0188 0x0000 05F7	PR0_PRU0_GPIO15	0	IO	Off / Off / Off	Off / Off / Off	7	3.3V	VDDSHV0	Yes	LVCMOS	PU/PD
		RMII2_TX_EN	2	O								
		RGMII2_TX_CTL	3	O								
		MII2_TX_EN	4	O								
		EPWM27_B	5	O								
		GPMC0_A6	6	O								
		GPIO98	7	IO								
H18	PR0_PRU0_GPIO16 PR0_PRU0_GPIO16_CFG_REG 0x5310 0184 0x0000 05F7	PR0_PRU0_GPIO16	0	IO	Off / Off / Off	Off / Off / Off	7	3.3V	VDDSHV0	Yes	LVCMOS	PU/PD
		RGMII2_TXC	3	O								
		MII2_TXCLK	4	I								
		EPWM27_A	5	O								
		GPMC0_A5	6	O								
		GPIO97	7	IO								
F18	PR0_PRU1_GPIO0 PR0_PRU1_GPIO0_CFG_REG 0x5310 01B4 0x0000 05F7	PR0_PRU1_GPIO0	0	IO	Off / Off / Off	Off / Off / Off	7	3.3V	VDDSHV0	Yes	LVCMOS	PU/PD
		FSITX2_DATA1	3	O								
		TRC_DATA6	4	O								
		GPMC0_A13	6	O								
		GPIO109	7	IO								

Copyright © 2026 Texas Instruments Incorporated

Table 5-1. Pin Attributes (ZCZ Package) (continued)

BALL NUMBER [1]	BALL NAME [2]/ IOMUX REGISTER [15]/ ADDRESS [16]/ DEFAULT VALUE [17]	SIGNAL NAME [3]	MUX MODE [4]	TYPE [5]	BALL STATE DURING RESET RX/TX/PULL [7]	BALL STATE AFTER RESET RX/TX/PULL [8]	MUX MODE AFTER RESET [9]	IO VOLTAGE [10]	POWER [11]	HYS [12]	BUFFER TYPE [14]	PULL TYPE [13]
G16	PR0_PRU1_GPIO1 PR0_PRU1_GPIO1_CFG_REG 0x5310 01B8 0x0000 05F7	PR0_PRU1_GPIO1	0	IO	Off / Off / Off	Off / Off / Off	7	3.3V	VDDSHV0	Yes	LVCMOS	PU/PD
		FSIRX2_CLK	3	I								
		TRC_DATA7	4	O								
		GPMC0_A14	6	O								
		GPIO110	7	IO								
E17	PR0_PRU1_GPIO2 PR0_PRU1_GPIO2_CFG_REG 0x5310 01BC 0x0000 05F7	PR0_PRU1_GPIO2	0	IO	Off / Off / Off	Off / Off / Off	7	3.3V	VDDSHV0	Yes	LVCMOS	PU/PD
		FSIRX2_DATA0	3	I								
		TRC_DATA8	4	O								
		GPMC0_A15	6	O								
		GPIO111	7	IO								
E18	PR0_PRU1_GPIO3 PR0_PRU1_GPIO3_CFG_REG 0x5310 01C0 0x0000 05F7	PR0_PRU1_GPIO3	0	IO	Off / Off / Off	Off / Off / Off	7	3.3V	VDDSHV0	Yes	LVCMOS	PU/PD
		FSIRX2_DATA1	3	I								
		TRC_DATA9	4	O								
		GPMC0_A16	6	O								
		GPIO112	7	IO								
F16	PR0_PRU1_GPIO4 PR0_PRU1_GPIO4_CFG_REG 0x5310 01B0 0x0000 05F7	PR0_PRU1_GPIO4	0	IO	Off / Off / Off	Off / Off / Off	7	3.3V	VDDSHV0	Yes	LVCMOS	PU/PD
		FSITX2_DATA0	3	O								
		TRC_DATA5	4	O								
		GPMC0_A12	6	O								
		GPIO108	7	IO								
F15	PR0_PRU1_GPIO5 PR0_PRU1_GPIO5_CFG_REG 0x5310 019C 0x0000 05F7	PR0_PRU1_GPIO5	0	IO	Off / Off / Off	Off / Off / Off	7	3.3V	VDDSHV0	Yes	LVCMOS	PU/PD
		TRC_DATA0	4	O								
		EPWM30_A	5	O								
		GPMC0_OEn_REn	6	O								
		GPIO103	7	IO								
E16	PR0_PRU1_GPIO6 PR0_PRU1_GPIO6_CFG_REG 0x5310 01AC 0x0000 05F7	PR0_PRU1_GPIO6	0	IO	Off / Off / Off	Off / Off / Off	7	3.3V	VDDSHV0	Yes	LVCMOS	PU/PD
		FSITX2_CLK	3	O								
		TRC_DATA4	4	O								
		GPMC0_A11	6	O								
		GPIO107	7	IO								
D18	PR0_PRU1_GPIO8 PR0_PRU1_GPIO8_CFG_REG 0x5310 01A8 0x0000 05F7	PR0_PRU1_GPIO8	0	IO	Off / Off / Off	Off / Off / Off	7	3.3V	VDDSHV0	Yes	LVCMOS	PU/PD
		TRC_DATA3	4	O								
		EPWM31_B	5	O								
		GPMC0_WEn	6	O								
		GPIO106	7	IO								

Copyright © 2026 Texas Instruments Incorporated

Table 5-1. Pin Attributes (ZCZ Package) (continued)

BALL NUMBER [1]	BALL NAME [2]/ IOMUX REGISTER [15]/ ADDRESS [16]/ DEFAULT VALUE [17]	SIGNAL NAME [3]	MUX MODE [4]	TYPE [5]	BALL STATE DURING RESET RX/TX/PULL [7]	BALL STATE AFTER RESET RX/TX/PULL [8]	MUX MODE AFTER RESET [9]	IO VOLTAGE [10]	POWER [11]	HYS [12]	BUFFER TYPE [14]	PULL TYPE [13]
C18	PR0_PRU1_GPIO9 PR0_PRU1_GPIO9_CFG_REG 0x5310 01A0 0x0000 05F7	PR0_PRU1_GPIO9	0	IO	Off / Off / Off	Off / Off / Off	7	3.3V	VDDSHV0	Yes	LVCMOS	PU/PD
		PR0_UART0_RXD	3	I								
		TRC_DATA1	4	O								
		EPWM30_B	5	O								
		GPMC0_BE0n_CLE	6	O								
		GPIO104	7	IO								
D17	PR0_PRU1_GPIO10 PR0_PRU1_GPIO10_CFG_REG 0x5310 01A4 0x0000 05F7	PR0_PRU1_GPIO10	0	IO	Off / Off / Off	Off / Off / Off	7	3.3V	VDDSHV0	Yes	LVCMOS	PU/PD
		PR0_UART0_TXD	3	O								
		TRC_DATA2	4	O								
		EPWM31_A	5	O								
		GPMC0_BE1n	6	O								
		GPIO105	7	IO								
B18	PR0_PRU1_GPIO11 PR0_PRU1_GPIO11_CFG_REG 0x5310 01CC 0x0000 05F7	PR0_PRU1_GPIO11	0	IO	Off / Off / Off	Off / Off / Off	7	3.3V	VDDSHV0	Yes	LVCMOS	PU/PD
		FSITX3_DATA1	3	O								
		TRC_DATA12	4	O								
		GPMC0_A19	6	O								
		GPIO115	7	IO								
B17	PR0_PRU1_GPIO12 PR0_PRU1_GPIO12_CFG_REG 0x5310 01D0 0x0000 05F7	PR0_PRU1_GPIO12	0	IO	Off / Off / Off	Off / Off / Off	7	3.3V	VDDSHV0	Yes	LVCMOS	PU/PD
		FSIRX3_CLK	3	I								
		TRC_DATA13	4	O								
		GPMC0_A20	6	O								
		GPIO116	7	IO								
D16	PR0_PRU1_GPIO13 PR0_PRU1_GPIO13_CFG_REG 0x5310 01D4 0x0000 05F7	PR0_PRU1_GPIO13	0	IO	Off / Off / Off	Off / Off / Off	7	3.3V	VDDSHV0	Yes	LVCMOS	PU/PD
		FSIRX3_DATA0	3	I								
		TRC_DATA14	4	O								
		XBAROUT11	5	O								
		GPMC0_A21	6	O								
		GPIO117	7	IO								
C17	PR0_PRU1_GPIO14 PR0_PRU1_GPIO14_CFG_REG 0x5310 01D8 0x0000 05F7	PR0_PRU1_GPIO14	0	IO	Off / Off / Off	Off / Off / Off	7	3.3V	VDDSHV0	Yes	LVCMOS	PU/PD
		FSIRX3_DATA1	3	I								
		TRC_DATA15	4	O								
		XBAROUT12	5	O								
		GPMC0_CSn0	6	O								
		GPIO118	7	IO								

Copyright © 2026 Texas Instruments Incorporated

Table 5-1. Pin Attributes (ZCZ Package) (continued)

BALL NUMBER [1]	BALL NAME [2]/ IOMUX REGISTER [15]/ ADDRESS [16]/ DEFAULT VALUE [17]	SIGNAL NAME [3]	MUX MODE [4]	TYPE [5]	BALL STATE DURING RESET RX/TX/PULL [7]	BALL STATE AFTER RESET RX/TX/PULL [8]	MUX MODE AFTER RESET [9]	IO VOLTAGE [10]	POWER [11]	HYS [12]	BUFFER TYPE [14]	PULL TYPE [13]
A17	PR0_PRU1_GPIO15 PR0_PRU1_GPIO15_CFG_REG 0x5310 01C8 0x0000 05F7	PR0_PRU1_GPIO15	0	IO	Off / Off / Off	Off / Off / Off	7	3.3V	VDDSHV0	Yes	LVCMOS	PU/PD
		FSITX3_DATA0	3	O								
		TRC_DATA11	4	O								
		GPMC0_A18	6	O								
		GPIO114	7	IO								
C16	PR0_PRU1_GPIO16 PR0_PRU1_GPIO16_CFG_REG 0x5310 01C4 0x0000 05F7	PR0_PRU1_GPIO16	0	IO	Off / Off / Off	Off / Off / Off	7	3.3V	VDDSHV0	Yes	LVCMOS	PU/PD
		FSITX3_CLK	3	O								
		TRC_DATA10	4	O								
		GPMC0_A17	6	O								
		GPIO113	7	IO								
C15	PR0_PRU1_GPIO18 PR0_PRU1_GPIO18_CFG_REG 0x5310 01E0 0x0000 05F7	PR0_PRU1_GPIO18	0	IO	Off / Off / Off	Off / Off / Off	7	3.3V	VDDSHV0	Yes	LVCMOS	PU/PD
		UART3_TXD	2	O								
		PR0_IEP0_EDIO_DATA_IN_OUT31	3	IO								
		TRC_CTL	4	O								
		XBAROUT14	5	O								
		GPMC0_WAIT1	6	I								
		GPIO120	7	IO								
		EQEP1_B	9	I								
D15	PR0_PRU1_GPIO19 PR0_PRU1_GPIO19_CFG_REG 0x5310 01DC 0x0000 05F7	PR0_PRU1_GPIO19	0	IO	Off / Off / Off	Off / Off / Off	7	3.3V	VDDSHV0	Yes	LVCMOS	PU/PD
		UART3_RXD	2	I								
		PR0_IEP0_EDC_SYNC_OUT0	3	O								
		TRC_CLK	4	O								
		XBAROUT13	5	O								
		GPIO119	7	IO								
		EQEP1_A	9	I								
N2	QSPI0_CLK QSPI0_CLK_CFG_REG 0x5310 0008 0x0000 05F7	QSPI0_CLK	0	O	Off / Off / Off	Off / Off / Off	7	3.3V	VDDSHV0	Yes	LVCMOS	PU/PD
		GPIO2	7	IO								
P1	QSPI0_CSn0 QSPI0_CSn0_CFG_REG 0x5310 0000 0x0000 05F7	QSPI0_CSn0	0	O	Off / Off / Off	Off / Off / Off	7	3.3V	VDDSHV0	Yes	LVCMOS	PU/PD
		GPIO0	7	IO								
R3	QSPI0_CSn1 QSPI0_CSn1_CFG_REG 0x5310 0004 0x0000 05F7	QSPI0_CSn1	0	O	Off / Off / Off	Off / Off / Off	7	3.3V	VDDSHV0	Yes	LVCMOS	PU/PD
		XBAROUT0	5	O								
		GPIO1	7	IO								

Copyright © 2026 Texas Instruments Incorporated

Table 5-1. Pin Attributes (ZCZ Package) (continued)

BALL NUMBER [1]	BALL NAME [2]/ IOMUX REGISTER [15]/ ADDRESS [16]/ DEFAULT VALUE [17]	SIGNAL NAME [3]	MUX MODE [4]	TYPE [5]	BALL STATE DURING RESET RX/TX/PULL [7]	BALL STATE AFTER RESET RX/TX/PULL [8]	MUX MODE AFTER RESET [9]	IO VOLTAGE [10]	POWER [11]	HYS [12]	BUFFER TYPE [14]	PULL TYPE [13]
N1	QSPI0_D0 QSPI0_D0_CFG_REG 0x5310 000C 0x0000 05D7	QSPI0_D0	0	IO	On / Off / Off	On / Off / Off	7	3.3V	VDDSHV0	Yes	LVCMOS	PU/PD
		GPIO3	7	IO								
		SOP0	Bootstrap	I								
N4	QSPI0_D1 QSPI0_D1_CFG_REG 0x5310 0010 0x0000 05D7	QSPI0_D1	0	I	On / Off / Off	On / Off / Off	7	3.3V	VDDSHV0	Yes	LVCMOS	PU/PD
		GPIO4	7	IO								
		SOP1	Bootstrap	I								
M4	QSPI0_D2 QSPI0_D2_CFG_REG 0x5310 0014 0x0000 05F7	QSPI0_D2	0	I	Off / Off / Off	Off / Off / Off	7	3.3V	VDDSHV0	Yes	LVCMOS	PU/PD
		GPIO5	7	IO								
P3	QSPI0_D3 QSPI0_D3_CFG_REG 0x5310 0018 0x0000 05F7	QSPI0_D3	0	I	Off / Off / Off	Off / Off / Off	7	3.3V	VDDSHV0	Yes	LVCMOS	PU/PD
		GPIO6	7	IO								
R17	RGMII1_RXC RGMII1_RXC_CFG_REG 0x5310 0074 0x0000 05F7	RGMII1_RXC	0	I	Off / Off / Off	Off / Off / Off	7	3.3V	VDDSHV0	Yes	LVCMOS	PU/PD
		RMII1_REF_CLK	1	IO								
		MII1_RXCLK	2	I								
		FSITX0_CLK	6	O								
		GPIO29	7	IO								
		EQEP2_A	8	I								
R18	RGMII1_RX_CTL RGMII1_RX_CTL_CFG_REG 0x5310 0078 0x0000 05F7	RGMII1_RX_CTL	0	I	Off / Off / Off	Off / Off / Off	7	3.3V	VDDSHV0	Yes	LVCMOS	PU/PD
		RMII1_RX_ER	1	I								
		MII1_RXDV	2	I								
		FSITX0_DATA0	6	O								
		GPIO30	7	IO								
		EQEP2_B	8	I								
N18	RGMII1_TXC RGMII1_TXC_CFG_REG 0x5310 008C 0x0000 05F7	RGMII1_TXC	0	O	Off / Off / Off	Off / Off / Off	7	3.3V	VDDSHV0	Yes	LVCMOS	PU/PD
		MII1_TXCLK	2	I								
		FSITX1_CLK	6	O								
		GPIO35	7	IO								
		EQEP0_INDEX	8	IO								
M18	RGMII1_TX_CTL RGMII1_TX_CTL_CFG_REG 0x5310 0090 0x0000 05F7	RGMII1_TX_CTL	0	O	Off / Off / Off	Off / Off / Off	7	3.3V	VDDSHV0	Yes	LVCMOS	PU/PD
		RMII1_TX_EN	1	O								
		MII1_TX_EN	2	O								
		FSITX1_DATA0	6	O								
		GPIO36	7	IO								
		EQEP0_STROBE	8	IO								

Copyright © 2026 Texas Instruments Incorporated

Table 5-1. Pin Attributes (ZCZ Package) (continued)

BALL NUMBER [1]	BALL NAME [2]/ IOMUX REGISTER [15]/ ADDRESS [16]/ DEFAULT VALUE [17]	SIGNAL NAME [3]	MUX MODE [4]	TYPE [5]	BALL STATE DURING RESET RX/TX/PULL [7]	BALL STATE AFTER RESET RX/TX/PULL [8]	MUX MODE AFTER RESET [9]	IO VOLTAGE [10]	POWER [11]	HYS [12]	BUFFER TYPE [14]	PULL TYPE [13]
U17	RGMII1_RD0 RGMII1_RD0_CFG_REG 0x5310 007C 0x0000 05F7	RGMII1_RD0	0	I	Off / Off / Off	Off / Off / Off	7	3.3V	VDDSHV0	Yes	LVCMOS	PU/PD
		RMII1_RXD0	1	I								
		MII1_RXD0	2	I								
		FSITX0_DATA1	6	O								
		GPIO31	7	IO								
		EQEP2_STROBE	8	IO								
T17	RGMII1_RD1 RGMII1_RD1_CFG_REG 0x5310 0080 0x0000 05F7	RGMII1_RD1	0	I	Off / Off / Off	Off / Off / Off	7	3.3V	VDDSHV0	Yes	LVCMOS	PU/PD
		RMII1_RXD1	1	I								
		MII1_RXD1	2	I								
		FSIRX0_CLK	6	I								
		GPIO32	7	IO								
		EQEP2_INDEX	8	IO								
U18	RGMII1_RD2 RGMII1_RD2_CFG_REG 0x5310 0084 0x0000 05F7	RGMII1_RD2	0	I	Off / Off / Off	Off / Off / Off	7	3.3V	VDDSHV0	Yes	LVCMOS	PU/PD
		MII1_RXD2	2	I								
		FSIRX0_DATA0	6	I								
		GPIO33	7	IO								
		EQEP0_A	8	I								
T18	RGMII1_RD3 RGMII1_RD3_CFG_REG 0x5310 0088 0x0000 05F7	RGMII1_RD3	0	I	Off / Off / Off	Off / Off / Off	7	3.3V	VDDSHV0	Yes	LVCMOS	PU/PD
		MII1_RXD3	2	I								
		FSIRX0_DATA1	6	I								
		GPIO34	7	IO								
		EQEP0_B	8	I								
P16	RGMII1_TD0 RGMII1_TD0_CFG_REG 0x5310 0094 0x0000 05F7	RGMII1_TD0	0	O	Off / Off / Off	Off / Off / Off	7	3.3V	VDDSHV0	Yes	LVCMOS	PU/PD
		RMII1_TXD0	1	O								
		MII1_TXD0	2	O								
		FSITX1_DATA1	6	O								
		GPIO37	7	IO								
		EQEP1_A	8	I								
P17	RGMII1_TD1 RGMII1_TD1_CFG_REG 0x5310 0098 0x0000 05F7	RGMII1_TD1	0	O	Off / Off / Off	Off / Off / Off	7	3.3V	VDDSHV0	Yes	LVCMOS	PU/PD
		RMII1_TXD1	1	O								
		MII1_TXD1	2	O								
		FSIRX1_CLK	6	I								
		GPIO38	7	IO								
		EQEP1_B	8	I								

Copyright © 2026 Texas Instruments Incorporated

Table 5-1. Pin Attributes (ZCZ Package) (continued)

BALL NUMBER [1]	BALL NAME [2]/ IOMUX REGISTER [15]/ ADDRESS [16]/ DEFAULT VALUE [17]	SIGNAL NAME [3]	MUX MODE [4]	TYPE [5]	BALL STATE DURING RESET RX/TX/PULL [7]	BALL STATE AFTER RESET RX/TX/PULL [8]	MUX MODE AFTER RESET [9]	IO VOLTAGE [10]	POWER [11]	HYS [12]	BUFFER TYPE [14]	PULL TYPE [13]
P18	RGMII1_TD2 RGMII1_TD2_CFG_REG 0x5310 009C 0x0000 05F7	RGMII1_TD2	0	O	Off / Off / Off	Off / Off / Off	7	3.3V	VDDSHV0	Yes	LVCMOS	PU/PD
		RMII1_CRS_DV	1	I								
		MII1_TXD2	2	O								
		FSIRX1_DATA0	6	I								
		GPIO39	7	IO								
		EQEP1_STROBE	8	IO								
N17	RGMII1_TD3 RGMII1_TD3_CFG_REG 0x5310 00A0 0x0000 05F7	RGMII1_TD3	0	O	Off / Off / Off	Off / Off / Off	7	3.3V	VDDSHV0	Yes	LVCMOS	PU/PD
		MII1_TXD3	2	O								
		FSIRX1_DATA1	6	I								
		GPIO40	7	IO								
		EQEP1_INDEX	8	IO								
T4	RSVD_T4	RSVD_T4		RSVD					Reserved		Reserved	
U1	RSVD_U1	RSVD_U1		RSVD					Reserved		Reserved	
U3	RSVD_U3	RSVD_U3		RSVD					Reserved		Reserved	
V2	RSVD_V2	RSVD_V2		RSVD					Reserved		Reserved	
D4	SAFETY_ERRORn SAFETY_ERRORn_CFG_REG 0x5310 0230 0x410	SAFETY_ERRORn	0	IO	On / Off / Down	On / NA / Down	0	3.3V	VDDSHV0	Yes	LVCMOS	PU/PD
B16	SDFM0_CLK0 SDFM0_CLK0_CFG_REG 0x5310 01E8 0x0000 05F7	CLKOUT1	0	O	Off / Off / Off	Off / Off / Off	7	3.3V	VDDSHV0	Yes	LVCMOS	PU/PD
		GPIO122	7	IO								
		SDFM0_CLK0	8	I								
		EQEP1_STROBE	9	IO								
A16	SDFM0_CLK1 SDFM0_CLK1_CFG_REG 0x5310 01F0 0x0000 05F7	PR0_PRU1_GPIO7	0	IO	Off / Off / Off	Off / Off / Off	7	3.3V	VDDSHV0	Yes	LVCMOS	PU/PD
		CPTS0_TS_SYNC	1	O								
		UART5_RTSn	2	O								
		PR0_IEP0_EDC_SYNC_OUT1	3	O								
		I2C3_SDA	5	IOD								
		GPIO124	7	IO								
		SDFM0_CLK1	8	I								
B15	SDFM0_CLK2 SDFM0_CLK2_CFG_REG 0x5310 01F8 0x0000 05F7	UART5_TXD	0	O	Off / Off / Off	Off / Off / Off	7	3.3V	VDDSHV0	Yes	LVCMOS	PU/PD
		I2C3_SCL	5	IOD								
		GPMC0_ADVn_ALE	6	O								
		GPIO126	7	IO								
		SDFM0_CLK2	8	I								

Copyright © 2026 Texas Instruments Incorporated

Table 5-1. Pin Attributes (ZCZ Package) (continued)

BALL NUMBER [1]	BALL NAME [2]/ IOMUX REGISTER [15]/ ADDRESS [16]/ DEFAULT VALUE [17]	SIGNAL NAME [3]	MUX MODE [4]	TYPE [5]	BALL STATE DURING RESET RX/TX/PULL [7]	BALL STATE AFTER RESET RX/TX/PULL [8]	MUX MODE AFTER RESET [9]	IO VOLTAGE [10]	POWER [11]	HYS [12]	BUFFER TYPE [14]	PULL TYPE [13]
A15	SDFM0_CLK3 SDFM0_CLK3_CFG_REG 0x5310 0200 0x0000 05F7	MCAN3_TX	0	O	Off / Off / Off	Off / Off / Off	7	3.3V	VDDSHV0	Yes	LVCMOS	PU/PD
		UART5_RXD	1	I								
		GPIO128	7	IO								
		SDFM0_CLK3	8	I								
D14	SDFM0_D0 SDFM0_D0_CFG_REG 0x5310 01EC 0x0000 05F7	PR0_ECAP0_APWM_OUT	0	O	Off / Off / Off	Off / Off / Off	7	3.3V	VDDSHV0	Yes	LVCMOS	PU/PD
		GPIO123	7	IO								
		SDFM0_D0	8	I								
D13	SDFM0_D1 SDFM0_D1_CFG_REG 0x5310 01F4 0x0000 05F7	PR0_PRU1_GPIO17	0	IO	Off / Off / Off	Off / Off / Off	7	3.3V	VDDSHV0	Yes	LVCMOS	PU/PD
		UART5_CTSn	2	I								
		PR0_IEP0_EDIO_DATA_IN_OUT30	3	IO								
		GPIO125	7	IO								
		SDFM0_D1	8	I								
C13	SDFM0_D2 SDFM0_D2_CFG_REG 0x5310 01FC 0x0000 05F7	UART5_RXD	0	I	Off / Off / Off	Off / Off / Off	7	3.3V	VDDSHV0	Yes	LVCMOS	PU/PD
		GPIO127	7	IO								
		SDFM0_D2	8	I								
C14	SDFM0_D3 SDFM0_D3_CFG_REG 0x5310 0204 0x0000 05F7	MCAN3_RX	0	I	Off / Off / Off	Off / Off / Off	7	3.3V	VDDSHV0	Yes	LVCMOS	PU/PD
		GPIO129	7	IO								
		SDFM0_D3	8	I								
A11	SPI0_CLK SPI0_CLK_CFG_REG 0x5310 0030 0x0000 05D7	SPI0_CLK	0	IO	On / Off / Off	On / Off / Off	7	3.3V	VDDSHV0	Yes	LVCMOS	PU/PD
		UART3_TXD	1	O								
		LIN3_TXD	2	IO								
		FSITX0_CLK	6	O								
		GPIO12	7	IO								
		SOP2	Bootstrap	I								
A10	SPI1_CLK SPI1_CLK_CFG_REG 0x5310 0040 0x0000 05F7	SPI1_CLK	0	IO	Off / Off / Off	Off / Off / Off	7	3.3V	VDDSHV0	Yes	LVCMOS	PU/PD
		UART4_RXD	1	I								
		LIN4_RXD	2	IO								
		XBAROUT2	5	O								
		FSIRX0_CLK	6	I								
		GPIO16	7	IO								
C11	SPI0_CS0 SPI0_CS0_CFG_REG 0x5310 002C 0x0000 05F7	SPI0_CS0	0	IO	Off / Off / Off	Off / Off / Off	7	3.3V	VDDSHV0	Yes	LVCMOS	PU/PD
		UART3_RXD	1	I								
		LIN3_RXD	2	IO								
		GPIO11	7	IO								

Copyright © 2026 Texas Instruments Incorporated

Table 5-1. Pin Attributes (ZCZ Package) (continued)

BALL NUMBER [1]	BALL NAME [2]/ IOMUX REGISTER [15]/ ADDRESS [16]/ DEFAULT VALUE [17]	SIGNAL NAME [3]	MUX MODE [4]	TYPE [5]	BALL STATE DURING RESET RX/TX/PULL [7]	BALL STATE AFTER RESET RX/TX/PULL [8]	MUX MODE AFTER RESET [9]	IO VOLTAGE [10]	POWER [11]	HYS [12]	BUFFER TYPE [14]	PULL TYPE [13]
C10	SPI0_D0 SPI0_D0_CFG_REG 0x5310 0034 0x0000 05D7	SPI0_D0	0	IO	On / Off / Off	On / Off / Off	7	3.3V	VDDSHV0	Yes	LVCMOS	PU/PD
		FSITX0_DATA0	6	O								
		GPIO13	7	IO								
		SOP3	Bootstrap	I								
B11	SPI0_D1 SPI0_D1_CFG_REG 0x5310 0038 0x0000 05F7	SPI0_D1	0	IO	Off / Off / Off	Off / Off / Off	7	3.3V	VDDSHV0	Yes	LVCMOS	PU/PD
		FSITX0_DATA1	6	O								
		GPIO14	7	IO								
C9	SPI1_CS0 SPI1_CS0_CFG_REG 0x5310 003C 0x0000 05F7	SPI1_CS0	0	IO	Off / Off / Off	Off / Off / Off	7	3.3V	VDDSHV0	Yes	LVCMOS	PU/PD
		UART4_TXD	1	O								
		LIN4_TXD	2	IO								
		XBAROUT1	5	O								
		GPIO15	7	IO								
B10	SPI1_D0 SPI1_D0_CFG_REG 0x5310 0044 0x0000 05F7	SPI1_D0	0	IO	Off / Off / Off	Off / Off / Off	7	3.3V	VDDSHV0	Yes	LVCMOS	PU/PD
		UART5_TXD	1	O								
		XBAROUT3	5	O								
		FSIRX0_DATA0	6	I								
		GPIO17	7	IO								
D9	SPI1_D1 SPI1_D1_CFG_REG 0x5310 0048 0x0000 05F7	SPI1_D1	0	IO	Off / Off / Off	Off / Off / Off	7	3.3V	VDDSHV0	Yes	LVCMOS	PU/PD
		UART5_RXD	1	I								
		XBAROUT4	5	O								
		FSIRX0_DATA1	6	I								
		GPIO18	7	IO								
B3	TCK TCK_CFG_REG 0x5310 0240 0x210	TCK	0	I	On / NA / Up	On / NA / Up	0	3.3V	VDDSHV0	Yes	HIGH HYST	
C5	TDI TDI_CFG_REG 0x5310 0234 0x6D0	TDI	0	I	On / Off / Up	On / Off / Up	0	3.3V	VDDSHV0	Yes	LVCMOS	PU/PD
C4	TDO TDO_CFG_REG 0x5310 0238 0x630	TDO	0	O	Off / Off / Up	Off / NA / Up	0	3.3V	VDDSHV0	Yes	LVCMOS	PU/PD
D5	TMS TMS_CFG_REG 0x5310 023C 0x610	TMS	0	IO	On / Off / Up	On / NA / Up	0	3.3V	VDDSHV0	Yes	LVCMOS	PU/PD

Copyright © 2026 Texas Instruments Incorporated

Table 5-1. Pin Attributes (ZCZ Package) (continued)

BALL NUMBER [1]	BALL NAME [2]/ IOMUX REGISTER [15]/ ADDRESS [16]/ DEFAULT VALUE [17]	SIGNAL NAME [3]	MUX MODE [4]	TYPE [5]	BALL STATE DURING RESET RX/TX/PULL [7]	BALL STATE AFTER RESET RX/TX/PULL [8]	MUX MODE AFTER RESET [9]	IO VOLTAGE [10]	POWER [11]	HYS [12]	BUFFER TYPE [14]	PULL TYPE [13]
B7	UART0_CTSn UART0_CTSn_CFG_REG 0x5310 0068 0x0000 05F7	UART0_CTSn	0	I	Off / Off / Off	Off / Off / Off	7	3.3V	VDDSHV0	Yes	LVCMOS	PU/PD
		I2C2_SDA	1	IOD								
		SPI3_D1	2	IO								
		MCAN3_RX	3	I								
		SPI0_CS1	4	IO								
		XBAROUT10	5	O								
		GPIO26	7	IO								
C7	UART0_RTSn UART0_RTSn_CFG_REG 0x5310 0064 0x0000 05F7	UART0_RTSn	0	O	Off / Off / Off	Off / Off / Off	7	3.3V	VDDSHV0	Yes	LVCMOS	PU/PD
		I2C2_SCL	1	IOD								
		SPI3_D0	2	IO								
		MCAN3_TX	3	O								
		XBAROUT9	5	O								
		GPIO25	7	IO								
A7	UART0_RXD UART0_RXD_CFG_REG 0x5310 006C 0x0000 05F7	UART0_RXD	0	I	Off / Off / Off	Off / Off / Off	7	3.3V	VDDSHV0	Yes	LVCMOS	PU/PD
		LIN0_RXD	1	IO								
		GPIO27	7	IO								
A6	UART0_TXD UART0_TXD_CFG_REG 0x5310 0070 0x0000 05F7	UART0_TXD	0	O	Off / Off / Off	Off / Off / Off	7	3.3V	VDDSHV0	Yes	LVCMOS	PU/PD
		LIN0_TXD	1	IO								
		GPIO28	7	IO								
L3	UART1_RXD UART1_RXD_CFG_REG 0x5310 012C 0x0000 05F7	UART1_RXD	0	I	Off / Off / Off	Off / Off / Off	7	3.3V	VDDSHV0	Yes	LVCMOS	PU/PD
		LIN1_RXD	1	IO								
		EPWM16_A	5	O								
		GPMC0_AD6	6	IO								
		GPIO75	7	IO								
M3	UART1_TXD UART1_TXD_CFG_REG 0x5310 0130 0x0000 05F7	UART1_TXD	0	O	Off / Off / Off	Off / Off / Off	7	3.3V	VDDSHV0	Yes	LVCMOS	PU/PD
		LIN1_TXD	1	IO								
		EPWM16_B	5	O								
		GPMC0_AD7	6	IO								
		GPIO76	7	IO								
E11, E9, F11, F9, G13, G14, G5, G6, J16, K13, K14, K5, K6, N13, N14, N5, N6, R9	VDD	VDD		PWR				1.2V				
R11, R8	VDDA18	VDDA18		PWR				1.8V				

Copyright © 2026 Texas Instruments Incorporated

Table 5-1. Pin Attributes (ZCZ Package) (continued)

BALL NUMBER [1]	BALL NAME [2]/ IOMUX REGISTER [15]/ ADDRESS [16]/ DEFAULT VALUE [17]	SIGNAL NAME [3]	MUX MODE [4]	TYPE [5]	BALL STATE DURING RESET RX/TX/PULL [7]	BALL STATE AFTER RESET RX/TX/PULL [8]	MUX MODE AFTER RESET [9]	IO VOLTAGE [10]	POWER [11]	HYS [12]	BUFFER TYPE [14]	PULL TYPE [13]
R6	VDDA18_LDO	VDDA18_LDO		PWR				1.8V				
R4	VDDA18_OSC_PLL	VDDA18_OSC_PLL		PWR				1.8V				
P11, P7, P9	VDDA33	VDDA33		PWR				3.3V				
J15	VDDAR1	VDDAR1		PWR				1.2V				
D10	VDDAR2	VDDAR2		PWR				1.2V				
H3	VDDAR3	VDDAR3		PWR				1.2V				
D6, E15, L4, N15	VDDS18	VDDS18		PWR				1.8V				
T3	VDDS18_LDO	VDDS18_LDO		PWR				1.8V				
D12, D8, H15, H4, L15, P4, R15	VDDS33	VDDS33		PWR				3.3V				
N3	VPP	VPP		PWR				VPP				

Copyright © 2026 Texas Instruments Incorporated

Table 5-1. Pin Attributes (ZCZ Package) (continued)

BALL NUMBER [1]	BALL NAME [2]/ IOMUX REGISTER [15]/ ADDRESS [16]/ DEFAULT VALUE [17]	SIGNAL NAME [3]	MUX MODE [4]	TYPE [5]	BALL STATE DURING RESET RX/TX/PULL [7]	BALL STATE AFTER RESET RX/TX/PULL [8]	MUX MODE AFTER RESET [9]	IO VOLTAGE [10]	POWER [11]	HYS [12]	BUFFER TYPE [14]	PULL TYPE [13]
A1, A18, E10, E12, E13, E14, E5, E6, E7, E8, F10, F12, F13, F14, F5, F6, F7, F8, G10, G11, G12, G7, G8, G9, H10, H11, H12, H13, H14, H5, H6, H7, H8, H9, J10, J11, J12, J13, J14, J5, J6, J7, J8, J9, K10, K11, K12, K7, K8, K9, L10, L11, L12, L13, L14, L5, L6, L7, L8, L9, M10, M11, M12, M13, M14, M5, M6, M7, M8, M9, N10, N11, N12, N7, N8, N9, P13, P14, P5, T2, V18	VSS	VSS		GND				VSS				
P10, P12, P6, P8, R13, R5, V1, V16	VSSA	VSSA		AGND				VSSA				
U2	VSYS_MON	VSYS_MON		PWR				0.9V	VDDA_CIO		AnalogCIO	
C3	WARMRSTn WARMRSTn_CFG_REG 0x5310 022C 0x510	WARMRSTn	0	IO	On / Off / Off	On / NA / Off	0	3.3V	VDDSHV0		FS OD	
T1	XTAL_XI	XTAL_XI		I			0	1.8V	VDDS_OSC	Yes	HFOSC	
R1	XTAL_XO	XTAL_XO		O			0	1.8V	VDDS_OSC		HFOSC	

Copyright © 2026 Texas Instruments Incorporated

5.3 Signal Descriptions

Many signals are available on multiple pins, according to the software configuration of the pin multiplexing options.

The following list describes the column headers:

1. **SIGNAL NAME:** The name of the signal passing through the pin.

Note

Signal names and descriptions provided in each Signal Descriptions table, represent the pin multiplexed signal function which is implemented at the pin and selected via IOMUX pad configuration registers. Some device subsystems provide secondary multiplexing of signal functions, which are not described in these tables. For more information on secondary multiplexed signal functions, see the respective peripheral chapter of the device TRM.

2. **PIN TYPE:** Signal direction and type:
   - I = Input
   - O = Output
   - IO = Input, Output, or simultaneously Input and Output
   - ID = Input with open-drain output function
   - OD = Output, with open-drain output function
   - IOD = Input, Output, or simultaneously Input and Output, with open-drain output function
   - IOZ = Input, Output, or simultaneously Input and Output, with three-state output function
   - OZ = Output with three-state output function
   - A = Analog
   - CAP = LDO capacitor
   - PWR = Power
   - GND = Ground
3. **DESCRIPTION:** Description of the signal
4. **BALL:** Associated ball number

For more information on the I/O cell configurations, see the *Pad Configuration Registers* section within the *Device Configuration* chapter of the device TRM.

5.3.1 ADC

Table 5-2. ADC0 Signal Descriptions

SIGNAL NAME [1]	PIN TYPE [2]	DESCRIPTION [3]	ZCZ PIN [4]
ADC0_AIN0	I	ADC Analog Input 0 (+IN0) CMPSSA0: inH (+IN)	V15
ADC0_AIN1	I	ADC Analog Input 1 (-IN0) CMPSSA0: inL (-IN)	U15
ADC0_AIN2	I	ADC Analog Input 2 (+IN1) CMPSSA1: inH (+IN)	T14
ADC0_AIN3	I	ADC Analog Input 3 (-IN1) CMPSSA1: inL (-IN)	U14
ADC0_AIN4	I	ADC Analog Input 4 (+IN2) CMPSSB0: inH/inL (+IN/-IN)	U13
ADC0_AIN5	I	ADC Analog Input 5 (-IN2) CMPSSB1: inH/inL (+IN/-IN)	R14

Table 5-3. ADC1 Signal Descriptions

SIGNAL NAME [1]	PIN TYPE [2]	DESCRIPTION [3]	ZCZ PIN [4]
ADC1_AIN0	I	ADC Analog Input 0 (+IN0) CMPSSA2: inH (+IN)	T11
ADC1_AIN1	I	ADC Analog Input 1 (-IN0) CMPSSA2: inL (-IN)	U11
ADC1_AIN2	I	ADC Analog Input 2 (+IN1) CMPSSA3: inH (+IN)	T12
ADC1_AIN3	I	ADC Analog Input 3 (-IN1) CMPSSA3: inL (-IN)	V12
ADC1_AIN4	I	ADC Analog Input 4 (+IN2) CMPSSB2: inH/inL (+IN/-IN)	U12
ADC1_AIN5	I	ADC Analog Input 5 (-IN2) CMPSSB3: inH/inL (+IN/-IN)	R12

Table 5-4. ADC2 Signal Descriptions

SIGNAL NAME [1]	PIN TYPE [2]	DESCRIPTION [3]	ZCZ PIN [4]
ADC2_AIN0	I	ADC Analog Input 0 (+IN0) CMPSSA4: inH (+IN)	R10
ADC2_AIN1	I	ADC Analog Input 1 (-IN0) CMPSSA4: inL (-IN)	T10
ADC2_AIN2	I	ADC Analog Input 2 (+IN1) CMPSSA5: inH (+IN)	U10
ADC2_AIN3	I	ADC Analog Input 3 (-IN1) CMPSSA5: inL (-IN)	T9
ADC2_AIN4	I	ADC Analog Input 4 (+IN2) CMPSSB4: inH/inL (+IN/-IN)	V9
ADC2_AIN5	I	ADC Analog Input 5 (-IN2) CMPSSB5: inH/inL (+IN/-IN)	T8

Table 5-5. ADC3 Signal Descriptions

SIGNAL NAME [1]	PIN TYPE [2]	DESCRIPTION [3]	ZCZ PIN [4]
ADC3_AIN0	I	ADC Analog Input 0 (+IN0) CMPSSA6: inH (+IN)	U7
ADC3_AIN1	I	ADC Analog Input 1 (-IN0) CMPSSA6: inL (-IN)	U8

Copyright © 2026 Texas Instruments Incorporated

Table 5-5. ADC3 Signal Descriptions (continued)

SIGNAL NAME [1]	PIN TYPE [2]	DESCRIPTION [3]	ZCZ PIN [4]
ADC3_AIN2	I	ADC Analog Input 2 (+IN1) CMPSSA7: inH (+IN)	T7
ADC3_AIN3	I	ADC Analog Input 3 (-IN1) CMPSSA7: inL (-IN)	R7
ADC3_AIN4	I	ADC Analog Input 4 (+IN2) CMPSSB6: inH/inL (+IN/-IN)	V8
ADC3_AIN5	I	ADC Analog Input 5 (-IN2) CMPSSB7: inH/inL (+IN/-IN)	U9

Table 5-6. ADC4 Signal Descriptions

SIGNAL NAME [1]	PIN TYPE [2]	DESCRIPTION [3]	ZCZ PIN [4]
ADC4_AIN0	I	ADC Analog Input 0 (+IN0) CMPSSA8: inH (+IN)	U6
ADC4_AIN1	I	ADC Analog Input 1 (-IN0) CMPSSA8: inL (-IN)	V5
ADC4_AIN2	I	ADC Analog Input 2 (+IN1) CMPSSA9: inH (+IN)	V4
ADC4_AIN3	I	ADC Analog Input 3 (-IN1) CMPSSA9: inL (-IN)	U5
ADC4_AIN4	I	ADC Analog Input 4 (+IN2) CMPSSB8: inH/inL (+IN/-IN)	V3
ADC4_AIN5	I	ADC Analog Input 5 (-IN2) CMPSSB9: inH/inL (+IN/-IN)	U4

5.3.1.1 ADC-CMPSS Signal Connections

In each ADC, two sets of differential pins shall be shared with pins of two CMPSSA and remaining one pair of differential pins shall be connected to two independent pins of CMPSSB. These pins are demonstrated in Figure 5-1 and Table 5-7 where the CHSEL values determine how the inputs are fed into ADC.

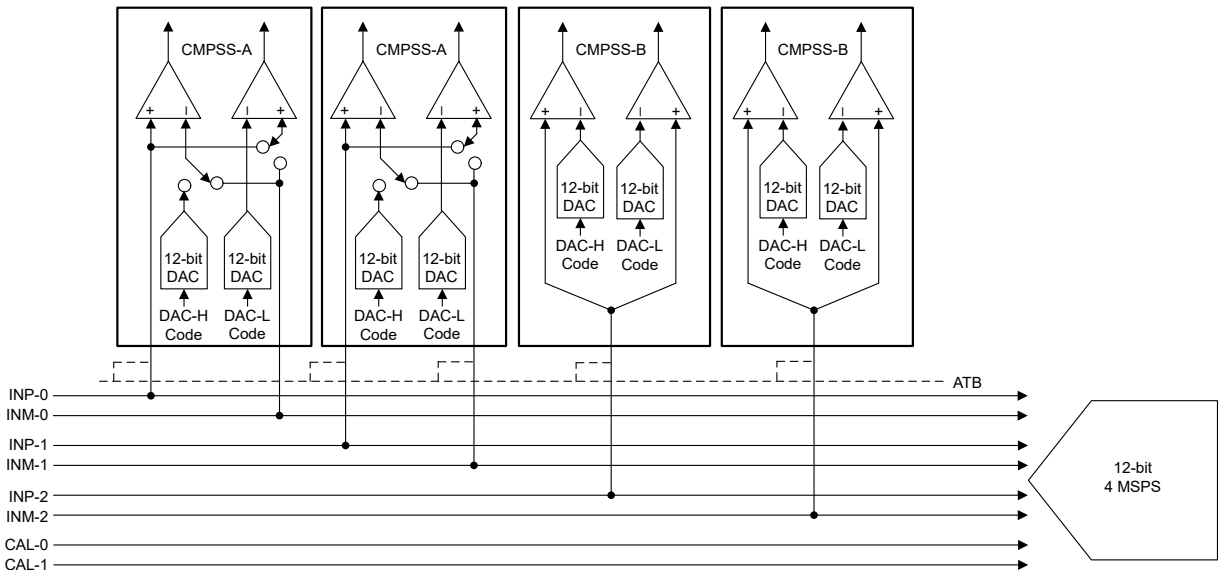

Figure 5-1. CMPSS and ADC Connections

Table 5-7. Connectivity between ADC Inputs to CMPSS Signals

Signal/Pin Name	ADC Input	CMPSS Input
ADC0 Channels		
ADC0_AIN0	ADC0:inp0 (+IN0)	CMPSSA0:inH (+IN)
ADC0_AIN1	ADC0:inm0 (-IN0)	CMPSSA0:inL (-IN)
ADC0_AIN2	ADC0:inp1 (+IN1)	CMPSSA1:inH (+IN)
ADC0_AIN3	ADC0:inm1 (-IN1)	CMPSSA1:inL (-IN)
ADC0_AIN4	ADC0:inp2 (+IN2)	CMPSSB0:inH/inL (+IN/-IN)
ADC0_AIN5	ADC0:inm2 (-IN2)	CMPSSB1:inH/inL (+IN/-IN)
ADC_CAL1	ADC0:inm3 (-IN3)	X
ADC_CAL0	ADC0:inp3 (+IN3)	X
ADC1 Channels		
ADC1_AIN0	ADC1:inp0 (+IN0)	CMPSSA2:inH (+IN)
ADC1_AIN1	ADC1:inm0 (-IN0)	CMPSSA2:inL (-IN)
ADC1_AIN2	ADC1:inp1 (+IN1)	CMPSSA3:inH (+IN)
ADC1_AIN3	ADC1:inm1 (-IN1)	CMPSSA3:inL (-IN)
ADC1_AIN4	ADC1:inp2 (+IN2)	CMPSSB2:inH/inL (+IN/-IN)
ADC1_AIN5	ADC1:inm2 (-IN2)	CMPSSB3:inH/inL (+IN/-IN)
ADC_CAL1	ADC1:inm3 (-IN3)	X
ADC_CAL0	ADC1:inp3 (+IN3)	X
ADC2 Channels		
ADC2_AIN0	ADC2:inp0 (+IN0)	CMPSSA4:inH (+IN)
ADC2_AIN1	ADC2:inm0 (-IN0)	CMPSSA4:inL (-IN)
ADC2_AIN2	ADC2:inp1 (+IN1)	CMPSSA5:inH (+IN)
ADC2_AIN3	ADC2:inm1 (-IN1)	CMPSSA5:inL (-IN)
ADC2_AIN4	ADC2:inp2 (+IN2)	CMPSSB4:inH/inL (+IN/-IN)
ADC2_AIN5	ADC2:inm2 (-IN2)	CMPSSB5:inH/inL (+IN/-IN)
ADC_CAL1	ADC2:inm3 (-IN3)	X
ADC_CAL0	ADC2:inp3 (+IN3)	X
ADC3 Channels		
ADC3_AIN0	ADC3:inp0 (+IN0)	CMPSSA6:inH (+IN)
ADC3_AIN1	ADC3:inm0 (-IN0)	CMPSSA6:inL (-IN)
ADC3_AIN2	ADC3:inp1 (+IN1)	CMPSSA7:inH (+IN)
ADC3_AIN3	ADC3:inm1 (-IN1)	CMPSSA7:inL (-IN)
ADC3_AIN4	ADC3:inp2 (+IN2)	CMPSSB6:inH/inL (+IN/-IN)
ADC3_AIN5	ADC3:inm2 (-IN2)	CMPSSB7:inH/inL (+IN/-IN)
ADC_CAL1	ADC3:inm3 (-IN3)	X
ADC_CAL0	ADC3:inp3 (+IN3)	X
ADC4 Channels		
ADC4_AIN0	ADC4:inp0 (+IN0)	CMPSSA8:inH (+IN)
ADC4_AIN1	ADC4:inm0 (-IN0)	CMPSSA8:inL (-IN)
ADC4_AIN2	ADC4:inp1 (+IN1)	CMPSSA9:inH (+IN)
ADC4_AIN3	ADC4:inm1 (-IN1)	CMPSSA9:inL (-IN)
ADC4_AIN4	ADC4:inp2 (+IN2)	CMPSSB8:inH/inL (+IN/-IN)
ADC4_AIN5	ADC4:inm2 (-IN2)	CMPSSB9:inH/inL (+IN/-IN)
ADC_CAL0	ADC4:inp3 (+IN3)	X
ADC_CAL1	ADC4:inm3 (-IN3)	X

Copyright © 2026 Texas Instruments Incorporated

Note

In the **ADC Input** column in ADC-CMPSS Signal Connectivity Table above, "inp" stands for positive inputs and "inm" stands for negative inputs.

5.3.2 ADC_CAL

Table 5-8. ADC_CAL Signal Descriptions

SIGNAL NAME [1]	PIN TYPE [2]	DESCRIPTION [3]	ZCZ PIN [4]
ADC_CAL0 (1)	I	ADC Calibration Pin 0	U16
ADC_CAL1 (1)	I	ADC Calibration Pin 1	T15

(1) This pin is shared between ADC[0:4].

5.3.3 ADC VREF

Table 5-9. ADC_VREF Signal Descriptions

SIGNAL NAME [1] ((5))	PIN TYPE [2]	DESCRIPTION [3]	ZCZ PIN [4]
ADC_VREFHI_G0	A	ADC Reference (Positive)	V14
ADC_VREFHI_G1 (2)	A	ADC Reference (Positive)	V10
ADC_VREFHI_G2	A	ADC Reference (Positive)	V6
ADC_VREFLO_G0 (1)	A	ADC Reference (Negative)	V13
ADC_VREFLO_G1 (3)	A	ADC Reference (Negative)	V11
ADC_VREFLO_G2 (4)	A	ADC Reference (Negative)	V7

(1) This pin should be connected (shorted) to analog ground (VSSA).
(2) This pin can be connected (shorted) to ADC_VREFHI_G0.
(3) This pin can be connected (shorted) to ADC_VREFLO_G0.
(4) This pin can be connected (shorted) to analog ground (VSSA).
(5) See the *Layout Guidelines* section and Hardware Design Guideline (SPRABJ8) for additional details on connecting these pins.

5.3.4 CPSW

Table 5-10. CPSW0 RGMII1 Signal Descriptions

SIGNAL NAME [1]	PIN TYPE [2]	DESCRIPTION [3]	ZCZ PIN [4]
RGMII1_RXC	I	RGMII Receive Clock	R17
RGMII1_RX_CTL	I	RGMII Receive Control	R18
RGMII1_TXC	O	RGMII Transmit Clock	N18
RGMII1_TX_CTL	O	RGMII Transmit Control	M18
RGMII1_RD0	I	RGMII Receive Data 0	U17
RGMII1_RD1	I	RGMII Receive Data 1	T17
RGMII1_RD2	I	RGMII Receive Data 2	U18
RGMII1_RD3	I	RGMII Receive Data 3	T18
RGMII1_TD0	O	RGMII Transmit Data 0	P16
RGMII1_TD1	O	RGMII Transmit Data 1	P17
RGMII1_TD2	O	RGMII Transmit Data 2	P18
RGMII1_TD3	O	RGMII Transmit Data 3	N17

Table 5-11. CPSW0 RGMII2 Signal Descriptions

SIGNAL NAME [1]	PIN TYPE [2]	DESCRIPTION [3]	ZCZ PIN [4]
RGMII2_RXC	I	RGMII Receive Clock	K15
RGMII2_RX_CTL	I	RGMII Receive Control	K16
RGMII2_TXC	O	RGMII Transmit Clock	H18
RGMII2_TX_CTL	O	RGMII Transmit Control	L16
RGMII2_RD0	I	RGMII Receive Data 0	K17
RGMII2_RD1	I	RGMII Receive Data 1	K18
RGMII2_RD2	I	RGMII Receive Data 2	J18
RGMII2_RD3	I	RGMII Receive Data 3	J17

Copyright © 2026 Texas Instruments Incorporated

Table 5-11. CPSW0 RGMII2 Signal Descriptions (continued)

SIGNAL NAME [1]	PIN TYPE [2]	DESCRIPTION [3]	ZCZ PIN [4]
RGMII2_TD0	O	RGMII Transmit Data 0	M16
RGMII2_TD1	O	RGMII Transmit Data 1	M15
RGMII2_TD2	O	RGMII Transmit Data 2	H17
RGMII2_TD3	O	RGMII Transmit Data 3	H16

Table 5-12. CPSW0 RMII1 Signal Descriptions

SIGNAL NAME [1]	PIN TYPE [2]	DESCRIPTION [3]	ZCZ PIN [4]
RMII1_CRS_DV	I	RMII Carrier Sense / Data Valid	P18
RMII1_REF_CLK	IO	RMII Reference Clock	R17
RMII1_RX_ER	I	RMII Receive Data Error	R18
RMII1_TX_EN	O	RMII Transmit Enable	M18
RMII1_RXD0	I	RMII Receive Data 0	U17
RMII1_RXD1	I	RMII Receive Data 1	T17
RMII1_TXD0	O	RMII Transmit Data 0	P16
RMII1_TXD1	O	RMII Transmit Data 1	P17

Table 5-13. CPSW0 RMII2 Signal Descriptions

SIGNAL NAME [1]	PIN TYPE [2]	DESCRIPTION [3]	ZCZ PIN [4]
RMII2_CRS_DV	I	RMII Carrier Sense / Data Valid	G18
RMII2_REF_CLK	IO	RMII Reference Clock	K15
RMII2_RX_ER	I	RMII Receive Data Error	G17
RMII2_TX_EN	O	RMII Transmit Enable	L16
RMII2_RXD0	I	RMII Receive Data 0	K17
RMII2_RXD1	I	RMII Receive Data 1	K18
RMII2_TXD0	O	RMII Transmit Data 0	M16
RMII2_TXD1	O	RMII Transmit Data 1	M15

Table 5-14. CPSW0 MII1 Signal Descriptions

SIGNAL NAME [1]	PIN TYPE [2]	DESCRIPTION [3]	ZCZ PIN [4]
MII1_COL	I	MII Collision Detected	P15
MII1_CRS	I	MII Carrier Sense	R16
MII1_RXCLK	I	MII Receive Clock	R17
MII1_RXDV	I	MII Receive Data Valid	R18
MII1_RX_ER	I	MII Receive Data Error	T16
MII1_TXCLK	I	MII Transmit Clock	N18
MII1_TX_EN	O	MII Transmit Enable	M18
MII1_RXD0	I	MII Receive Data 0	U17
MII1_RXD1	I	MII Receive Data 1	T17
MII1_RXD2	I	MII Receive Data 2	U18
MII1_RXD3	I	MII Receive Data 3	T18
MII1_TXD0	O	MII Transmit Data 0	P16
MII1_TXD1	O	MII Transmit Data 1	P17
MII1_TXD2	O	MII Transmit Data 2	P18
MII1_TXD3	O	MII Transmit Data 3	N17

Copyright © 2026 Texas Instruments Incorporated

Table 5-15. CPSW0 MII2 Signal Descriptions

SIGNAL NAME [1]	PIN TYPE [2]	DESCRIPTION [3]	ZCZ PIN [4]
MII2_COL	I	MII Collision Detected	F17
MII2_CRS	I	MII Carrier Sense	G18
MII2_RXCLK	I	MII Receive Clock	K15
MII2_RXDV	I	MII Receive Data Valid	K16
MII2_RX_ER	I	MII Receive Error	G17
MII2_TXCLK	I	MII Transmit Clock	H18
MII2_TX_EN	O	MII Transmit Enable	L16
MII2_RXD0	I	MII Receive Data 0	K17
MII2_RXD1	I	MII Receive Data 1	K18
MII2_RXD2	I	MII Receive Data 2	J18
MII2_RXD3	I	MII Receive Data 3	J17
MII2_TXD0	O	MII Transmit Data 0	M16
MII2_TXD1	O	MII Transmit Data 1	M15
MII2_TXD2	O	MII Transmit Data 2	H17
MII2_TXD3	O	MII Transmit Data 3	H16

Table 5-16. MDIO0 Signal Descriptions

SIGNAL NAME [1]	PIN TYPE [2]	DESCRIPTION [3]	ZCZ PIN [4]
MDIO0_MDC	O	MDIO Clock	M17
MDIO0_MDIO	IO	MDIO Data	N16

5.3.5 CPTS

Table 5-17. CPTS0 Signal Descriptions

SIGNAL NAME [1]	PIN TYPE [2]	DESCRIPTION [3]	ZCZ PIN [4]
CPTS0_TS_SYNC	O	CPTS Time Stamp Counter Bit Output	A16

5.3.6 DAC

Table 5-18. DAC Signal Descriptions

SIGNAL NAME [1]	PIN TYPE [2]	DESCRIPTION [3]	ZCZ PIN [4]
DAC_OUT	O	DAC Output	T5
DAC_VREF0 (1) (2)	A	DAC Voltage Reference 0	T13
DAC_VREF1 (1) (2)	A	DAC Voltage Reference 1	T6

(1) See the *Layout Guidelines* sections for details on connecting these pins.
(2) This pin can be connected (shorted) to VDDA18_LDO.

5.3.7 Emulation and Debug

Table 5-19. Trace Signal Descriptions

SIGNAL NAME [1]	PIN TYPE [2]	DESCRIPTION [3]	ZCZ PIN [4]
TRC_CLK	O	Trace Clock	D15
TRC_CTL	O	Trace Control	C15
TRC_DATA0	O	Trace Data 0	F15
TRC_DATA1	O	Trace Data 1	C18
TRC_DATA2	O	Trace Data 2	D17
TRC_DATA3	O	Trace Data 3	D18
TRC_DATA4	O	Trace Data 4	E16

Copyright © 2026 Texas Instruments Incorporated

Table 5-19. Trace Signal Descriptions (continued)

SIGNAL NAME [1]	PIN TYPE [2]	DESCRIPTION [3]	ZCZ PIN [4]
TRC_DATA5	O	Trace Data 5	F16
TRC_DATA6	O	Trace Data 6	F18
TRC_DATA7	O	Trace Data 7	G16
TRC_DATA8	O	Trace Data 8	E17
TRC_DATA9	O	Trace Data 9	E18
TRC_DATA10	O	Trace Data 10	C16
TRC_DATA11	O	Trace Data 11	A17
TRC_DATA12	O	Trace Data 12	B18
TRC_DATA13	O	Trace Data 13	B17
TRC_DATA14	O	Trace Data 14	D16
TRC_DATA15	O	Trace Data 15	C17

Table 5-20. JTAG Signal Descriptions

SIGNAL NAME [1]	PIN TYPE [2]	DESCRIPTION [3]	ZCZ PIN [4]
TCK	I	JTAG Test Clock Input	B3
TDI	I	JTAG Test Data Input	C5
TDO	O	JTAG Test Data Output	C4
TMS	IO	JTAG Test Mode Select Input	D5

5.3.8 EPWM

Table 5-21. EPWM0 Signal Descriptions

SIGNAL NAME [1]	PIN TYPE [2]	DESCRIPTION [3]	ZCZ PIN [4]
EPWM0_A	O	EPWM Output A	B2
EPWM0_B	O	EPWM Output B	B1

Table 5-22. EPWM1 Signal Descriptions

SIGNAL NAME [1]	PIN TYPE [2]	DESCRIPTION [3]	ZCZ PIN [4]
EPWM1_A	O	EPWM Output A	D3
EPWM1_B	O	EPWM Output B	D2

Table 5-23. EPWM2 Signal Descriptions

SIGNAL NAME [1]	PIN TYPE [2]	DESCRIPTION [3]	ZCZ PIN [4]
EPWM2_A	O	EPWM Output A	C2
EPWM2_B	O	EPWM Output B	C1

Table 5-24. EPWM3 Signal Descriptions

SIGNAL NAME [1]	PIN TYPE [2]	DESCRIPTION [3]	ZCZ PIN [4]
EPWM3_A	O	EPWM Output A	E2
EPWM3_B	O	EPWM Output B	E3

Table 5-25. EPWM4 Signal Descriptions

SIGNAL NAME [1]	PIN TYPE [2]	DESCRIPTION [3]	ZCZ PIN [4]
EPWM4_A	O	EPWM Output A	D1
EPWM4_B	O	EPWM Output B	E4

Copyright © 2026 Texas Instruments Incorporated

Table 5-26. EPWM5 Signal Descriptions

SIGNAL NAME [1]	PIN TYPE [2]	DESCRIPTION [3]	ZCZ PIN [4]
EPWM5_A	O	EPWM Output A	F2
EPWM5_B	O	EPWM Output B	G2

Table 5-27. EPWM6 Signal Descriptions

SIGNAL NAME [1]	PIN TYPE [2]	DESCRIPTION [3]	ZCZ PIN [4]
EPWM6_A	O	EPWM Output A	E1
EPWM6_B	O	EPWM Output B	F3

Table 5-28. EPWM7 Signal Descriptions

SIGNAL NAME [1]	PIN TYPE [2]	DESCRIPTION [3]	ZCZ PIN [4]
EPWM7_A	O	EPWM Output A	F4
EPWM7_B	O	EPWM Output B	F1

Table 5-29. EPWM8 Signal Descriptions

SIGNAL NAME [1]	PIN TYPE [2]	DESCRIPTION [3]	ZCZ PIN [4]
EPWM8_A	O	EPWM Output A	G3
EPWM8_B	O	EPWM Output B	H2

Table 5-30. EPWM9 Signal Descriptions

SIGNAL NAME [1]	PIN TYPE [2]	DESCRIPTION [3]	ZCZ PIN [4]
EPWM9_A	O	EPWM Output A	G1
EPWM9_B	O	EPWM Output B	J2

Table 5-31. EPWM10 Signal Descriptions

SIGNAL NAME [1]	PIN TYPE [2]	DESCRIPTION [3]	ZCZ PIN [4]
EPWM10_A	O	EPWM Output A	G4
EPWM10_B	O	EPWM Output B	J3

Table 5-32. EPWM11 Signal Descriptions

SIGNAL NAME [1]	PIN TYPE [2]	DESCRIPTION [3]	ZCZ PIN [4]
EPWM11_A	O	EPWM Output A	H1
EPWM11_B	O	EPWM Output B	J1

Table 5-33. EPWM12 Signal Descriptions

SIGNAL NAME [1]	PIN TYPE [2]	DESCRIPTION [3]	ZCZ PIN [4]
EPWM12_A	O	EPWM Output A	K2
EPWM12_B	O	EPWM Output B	J4

Table 5-34. EPWM13 Signal Descriptions

SIGNAL NAME [1]	PIN TYPE [2]	DESCRIPTION [3]	ZCZ PIN [4]
EPWM13_A	O	EPWM Output A	K4
EPWM13_B	O	EPWM Output B	K3

Table 5-35. EPWM14 Signal Descriptions

SIGNAL NAME [1]	PIN TYPE [2]	DESCRIPTION [3]	ZCZ PIN [4]
EPWM14_A	O	EPWM Output A	V17

Copyright © 2026 Texas Instruments Incorporated

Table 5-35. EPWM14 Signal Descriptions (continued)

SIGNAL NAME [1]	PIN TYPE [2]	DESCRIPTION [3]	ZCZ PIN [4]
EPWM14_B	O	EPWM Output B	T16

Table 5-36. EPWM15 Signal Descriptions

SIGNAL NAME [1]	PIN TYPE [2]	DESCRIPTION [3]	ZCZ PIN [4]
EPWM15_A	O	EPWM Output A	P15
EPWM15_B	O	EPWM Output B	R16

Table 5-37. EPWM16 Signal Descriptions

SIGNAL NAME [1]	PIN TYPE [2]	DESCRIPTION [3]	ZCZ PIN [4]
EPWM16_A	O	EPWM Output A	L3
EPWM16_B	O	EPWM Output B	M3

Table 5-38. EPWM17 Signal Descriptions

SIGNAL NAME [1]	PIN TYPE [2]	DESCRIPTION [3]	ZCZ PIN [4]
EPWM17_A	O	EPWM Output A	B6
EPWM17_B	O	EPWM Output B	A4

Table 5-39. EPWM18 Signal Descriptions

SIGNAL NAME [1]	PIN TYPE [2]	DESCRIPTION [3]	ZCZ PIN [4]
EPWM18_A	O	EPWM Output A	B5
EPWM18_B	O	EPWM Output B	B4

Table 5-40. EPWM19 Signal Descriptions

SIGNAL NAME [1]	PIN TYPE [2]	DESCRIPTION [3]	ZCZ PIN [4]
EPWM19_A	O	EPWM Output A	A3
EPWM19_B	O	EPWM Output B	A2

Table 5-41. EPWM20 Signal Descriptions

SIGNAL NAME [1]	PIN TYPE [2]	DESCRIPTION [3]	ZCZ PIN [4]
EPWM20_A	O	EPWM Output A	C6
EPWM20_B	O	EPWM Output B	A5

Table 5-42. EPWM21 Signal Descriptions

SIGNAL NAME [1]	PIN TYPE [2]	DESCRIPTION [3]	ZCZ PIN [4]
EPWM21_A	O	EPWM Output A	L17
EPWM21_B	O	EPWM Output B	L18

Table 5-43. EPWM22 Signal Descriptions

SIGNAL NAME [1]	PIN TYPE [2]	DESCRIPTION [3]	ZCZ PIN [4]
EPWM22_A	O	EPWM Output A	G17
EPWM22_B	O	EPWM Output B	F17

Table 5-44. EPWM23 Signal Descriptions

SIGNAL NAME [1]	PIN TYPE [2]	DESCRIPTION [3]	ZCZ PIN [4]
EPWM23_A	O	EPWM Output A	G18

Copyright © 2026 Texas Instruments Incorporated

Table 5-44. EPWM23 Signal Descriptions (continued)

SIGNAL NAME [1]	PIN TYPE [2]	DESCRIPTION [3]	ZCZ PIN [4]
EPWM23_B	O	EPWM Output B	G15

Table 5-45. EPWM24 Signal Descriptions

SIGNAL NAME [1]	PIN TYPE [2]	DESCRIPTION [3]	ZCZ PIN [4]
EPWM24_A	O	EPWM Output A	K15
EPWM24_B	O	EPWM Output B	K16

Table 5-46. EPWM25 Signal Descriptions

SIGNAL NAME [1]	PIN TYPE [2]	DESCRIPTION [3]	ZCZ PIN [4]
EPWM25_A	O	EPWM Output A	K17
EPWM25_B	O	EPWM Output B	K18

Table 5-47. EPWM26 Signal Descriptions

SIGNAL NAME [1]	PIN TYPE [2]	DESCRIPTION [3]	ZCZ PIN [4]
EPWM26_A	O	EPWM Output A	J18
EPWM26_B	O	EPWM Output B	J17

Table 5-48. EPWM27 Signal Descriptions

SIGNAL NAME [1]	PIN TYPE [2]	DESCRIPTION [3]	ZCZ PIN [4]
EPWM27_A	O	EPWM Output A	H18
EPWM27_B	O	EPWM Output B	L16

Table 5-49. EPWM28 Signal Descriptions

SIGNAL NAME [1]	PIN TYPE [2]	DESCRIPTION [3]	ZCZ PIN [4]
EPWM28_A	O	EPWM Output A	M16
EPWM28_B	O	EPWM Output B	M15

Table 5-50. EPWM29 Signal Descriptions

SIGNAL NAME [1]	PIN TYPE [2]	DESCRIPTION [3]	ZCZ PIN [4]
EPWM29_A	O	EPWM Output A	H17
EPWM29_B	O	EPWM Output B	H16

Table 5-51. EPWM30 Signal Descriptions

SIGNAL NAME [1]	PIN TYPE [2]	DESCRIPTION [3]	ZCZ PIN [4]
EPWM30_A	O	EPWM Output A	F15
EPWM30_B	O	EPWM Output B	C18

Table 5-52. EPWM31 Signal Descriptions

SIGNAL NAME [1]	PIN TYPE [2]	DESCRIPTION [3]	ZCZ PIN [4]
EPWM31_A	O	EPWM Output A	D17
EPWM31_B	O	EPWM Output B	D18

5.3.9 EQEP

Table 5-53. EQEP0 Signal Descriptions

SIGNAL NAME [1]	PIN TYPE [2]	DESCRIPTION [3]	ZCZ PIN [4]
EQEP0_A	I	EQEP Quadrature Input A	B14, U18

Copyright © 2026 Texas Instruments Incorporated

Table 5-53. EQEP0 Signal Descriptions (continued)

SIGNAL NAME [1]	PIN TYPE [2]	DESCRIPTION [3]	ZCZ PIN [4]
EQEP0_B	I	EQEP Quadrature Input B	A14, T18
EQEP0_INDEX	IO	EQEP Index	D11, N18
EQEP0_STROBE	IO	EQEP Strobe	C12, M18

Table 5-54. EQEP1 Signal Descriptions

SIGNAL NAME [1]	PIN TYPE [2]	DESCRIPTION [3]	ZCZ PIN [4]
EQEP1_A	I	EQEP Quadrature Input A	D15, P16
EQEP1_B	I	EQEP Quadrature Input B	C15, P17
EQEP1_INDEX	IO	EQEP Index	N17, P2
EQEP1_STROBE	IO	EQEP Strobe	B16, P18

Table 5-55. EQEP2 Signal Descriptions

SIGNAL NAME [1]	PIN TYPE [2]	DESCRIPTION [3]	ZCZ PIN [4]
EQEP2_A (1)	I	EQEP Quadrature Input A	B13, R17
EQEP2_B (2)	I	EQEP Quadrature Input B	A13, R18
EQEP2_INDEX	IO	EQEP Index	A12, T17
EQEP2_STROBE	IO	EQEP Strobe	B12, U17

(1) EQEP2_A is implemented with the I2C OD FS (Open Drain Fail Safe) voltage buffer when using ball B13.
(2) EQEP2_B is implemented with the I2C OD FS (Open Drain Fail Safe) voltage buffer when using ball A13.

5.3.10 FSI

Table 5-56. FSIRX0 Signal Descriptions

SIGNAL NAME [1]	PIN TYPE [2]	DESCRIPTION [3]	ZCZ PIN [4]
FSIRX0_CLK	I	FSI Clock	A10, T17
FSIRX0_DATA0	I	FSI Data 0	B10, U18
FSIRX0_DATA1	I	FSI Data 1	D9, T18

Table 5-57. FSIRX1 Signal Descriptions

SIGNAL NAME [1]	PIN TYPE [2]	DESCRIPTION [3]	ZCZ PIN [4]
FSIRX1_CLK	I	FSI Clock	E1, P17
FSIRX1_DATA0	I	FSI Data 0	F3, P18
FSIRX1_DATA1	I	FSI Data 1	F4, N17

Table 5-58. FSIRX2 Signal Descriptions

SIGNAL NAME [1]	PIN TYPE [2]	DESCRIPTION [3]	ZCZ PIN [4]
FSIRX2_CLK	I	FSI Clock	G16, J2
FSIRX2_DATA0	I	FSI Data 0	E17, G4
FSIRX2_DATA1	I	FSI Data 1	E18, J3

Table 5-59. FSIRX3 Signal Descriptions

SIGNAL NAME [1]	PIN TYPE [2]	DESCRIPTION [3]	ZCZ PIN [4]
FSIRX3_CLK	I	FSI Clock	B17
FSIRX3_DATA0	I	FSI Data 0	D16
FSIRX3_DATA1	I	FSI Data 1	C17

Copyright © 2026 Texas Instruments Incorporated

Table 5-60. FSITX0 Signal Descriptions

SIGNAL NAME [1]	PIN TYPE [2]	DESCRIPTION [3]	ZCZ PIN [4]
FSITX0_CLK	O	FSI Clock	A11, R17
FSITX0_DATA0	O	FSI Data 0	C10, R18
FSITX0_DATA1	O	FSI Data 1	B11, U17

Table 5-61. FSITX1 Signal Descriptions

SIGNAL NAME [1]	PIN TYPE [2]	DESCRIPTION [3]	ZCZ PIN [4]
FSITX1_CLK	O	FSI Clock	E4, N18
FSITX1_DATA0	O	FSI Data 0	F2, M18
FSITX1_DATA1	O	FSI Data 1	G2, P16

Table 5-62. FSITX2 Signal Descriptions

SIGNAL NAME [1]	PIN TYPE [2]	DESCRIPTION [3]	ZCZ PIN [4]
FSITX2_CLK	O	FSI Clock	E16, G3
FSITX2_DATA0	O	FSI Data 0	F16, H2
FSITX2_DATA1	O	FSI Data 1	F18, G1

Table 5-63. FSITX3 Signal Descriptions

SIGNAL NAME [1]	PIN TYPE [2]	DESCRIPTION [3]	ZCZ PIN [4]
FSITX3_CLK	O	FSI Clock	C16
FSITX3_DATA0	O	FSI Data 0	A17
FSITX3_DATA1	O	FSI Data 1	B18

5.3.11 GPIO

Table 5-64. GPIO Signal Descriptions

SIGNAL NAME [1]	PIN TYPE [2]	DESCRIPTION [3]	ZCZ PIN [4]
GPIO0	IO	General Purpose Input/Output	P1
GPIO1	IO	General Purpose Input/Output	R3
GPIO2	IO	General Purpose Input/Output	N2
GPIO3	IO	General Purpose Input/Output	N1
GPIO4	IO	General Purpose Input/Output	N4
GPIO5	IO	General Purpose Input/Output	M4
GPIO6	IO	General Purpose Input/Output	P3
GPIO7	IO	General Purpose Input/Output	M1
GPIO8	IO	General Purpose Input/Output	L1
GPIO9	IO	General Purpose Input/Output	L2
GPIO10	IO	General Purpose Input/Output	K1
GPIO11	IO	General Purpose Input/Output	C11
GPIO12	IO	General Purpose Input/Output	A11
GPIO13	IO	General Purpose Input/Output	C10
GPIO14	IO	General Purpose Input/Output	B11
GPIO15	IO	General Purpose Input/Output	C9
GPIO16	IO	General Purpose Input/Output	A10
GPIO17	IO	General Purpose Input/Output	B10
GPIO18	IO	General Purpose Input/Output	D9
GPIO19	IO	General Purpose Input/Output	A9

Copyright © 2026 Texas Instruments Incorporated

Table 5-64. GPIO Signal Descriptions (continued)

SIGNAL NAME [1]	PIN TYPE [2]	DESCRIPTION [3]	ZCZ PIN [4]
GPIO100	IO	General Purpose Input/Output	M15
GPIO101	IO	General Purpose Input/Output	H17
GPIO102	IO	General Purpose Input/Output	H16
GPIO103	IO	General Purpose Input/Output	F15
GPIO104	IO	General Purpose Input/Output	C18
GPIO105	IO	General Purpose Input/Output	D17
GPIO106	IO	General Purpose Input/Output	D18
GPIO107	IO	General Purpose Input/Output	E16
GPIO108	IO	General Purpose Input/Output	F16
GPIO109	IO	General Purpose Input/Output	F18
GPIO110	IO	General Purpose Input/Output	G16
GPIO111	IO	General Purpose Input/Output	E17
GPIO112	IO	General Purpose Input/Output	E18
GPIO113	IO	General Purpose Input/Output	C16
GPIO114	IO	General Purpose Input/Output	A17
GPIO115	IO	General Purpose Input/Output	B18
GPIO116	IO	General Purpose Input/Output	B17
GPIO117	IO	General Purpose Input/Output	D16
GPIO118	IO	General Purpose Input/Output	C17
GPIO119	IO	General Purpose Input/Output	D15
GPIO120	IO	General Purpose Input/Output	C15
GPIO121	IO	General Purpose Input/Output	P2
GPIO122	IO	General Purpose Input/Output	B16
GPIO123	IO	General Purpose Input/Output	D14
GPIO124	IO	General Purpose Input/Output	A16
GPIO125	IO	General Purpose Input/Output	D13
GPIO126	IO	General Purpose Input/Output	B15
GPIO127	IO	General Purpose Input/Output	C13
GPIO128	IO	General Purpose Input/Output	A15
GPIO129	IO	General Purpose Input/Output	C14
GPIO130	IO	General Purpose Input/Output	B14
GPIO131	IO	General Purpose Input/Output	A14
GPIO132	IO	General Purpose Input/Output	C12
GPIO133	IO	General Purpose Input/Output	D11
GPIO134 (1)	IOD	General Purpose Input/Output	B13
GPIO135 (2)	IOD	General Purpose Input/Output	A13
GPIO136	IO	General Purpose Input/Output	B12
GPIO137	IO	General Purpose Input/Output	A12
GPIO138	IO	General Purpose Input/Output	M2
GPIO20	IO	General Purpose Input/Output	B9
GPIO21	IO	General Purpose Input/Output	B8
GPIO22	IO	General Purpose Input/Output	A8
GPIO23	IO	General Purpose Input/Output	D7
GPIO24	IO	General Purpose Input/Output	C8
GPIO25	IO	General Purpose Input/Output	C7

Copyright © 2026 Texas Instruments Incorporated

Table 5-64. GPIO Signal Descriptions (continued)

SIGNAL NAME [1]	PIN TYPE [2]	DESCRIPTION [3]	ZCZ PIN [4]
GPIO26	IO	General Purpose Input/Output	B7
GPIO27	IO	General Purpose Input/Output	A7
GPIO28	IO	General Purpose Input/Output	A6
GPIO29	IO	General Purpose Input/Output	R17
GPIO30	IO	General Purpose Input/Output	R18
GPIO31	IO	General Purpose Input/Output	U17
GPIO32	IO	General Purpose Input/Output	T17
GPIO33	IO	General Purpose Input/Output	U18
GPIO34	IO	General Purpose Input/Output	T18
GPIO35	IO	General Purpose Input/Output	N18
GPIO36	IO	General Purpose Input/Output	M18
GPIO37	IO	General Purpose Input/Output	P16
GPIO38	IO	General Purpose Input/Output	P17
GPIO39	IO	General Purpose Input/Output	P18
GPIO40	IO	General Purpose Input/Output	N17
GPIO41	IO	General Purpose Input/Output	N16
GPIO42	IO	General Purpose Input/Output	M17
GPIO43	IO	General Purpose Input/Output	B2
GPIO44	IO	General Purpose Input/Output	B1
GPIO45	IO	General Purpose Input/Output	D3
GPIO46	IO	General Purpose Input/Output	D2
GPIO47	IO	General Purpose Input/Output	C2
GPIO48	IO	General Purpose Input/Output	C1
GPIO49	IO	General Purpose Input/Output	E2
GPIO50	IO	General Purpose Input/Output	E3
GPIO51	IO	General Purpose Input/Output	D1
GPIO52	IO	General Purpose Input/Output	E4
GPIO53	IO	General Purpose Input/Output	F2
GPIO54	IO	General Purpose Input/Output	G2
GPIO55	IO	General Purpose Input/Output	E1
GPIO56	IO	General Purpose Input/Output	F3
GPIO57	IO	General Purpose Input/Output	F4
GPIO58	IO	General Purpose Input/Output	F1
GPIO59	IO	General Purpose Input/Output	G3
GPIO60	IO	General Purpose Input/Output	H2
GPIO61	IO	General Purpose Input/Output	G1
GPIO62	IO	General Purpose Input/Output	J2
GPIO63	IO	General Purpose Input/Output	G4
GPIO64	IO	General Purpose Input/Output	J3
GPIO65	IO	General Purpose Input/Output	H1
GPIO66	IO	General Purpose Input/Output	J1
GPIO67	IO	General Purpose Input/Output	K2
GPIO68	IO	General Purpose Input/Output	J4
GPIO69	IO	General Purpose Input/Output	K4
GPIO70	IO	General Purpose Input/Output	K3

Copyright © 2026 Texas Instruments Incorporated

Table 5-64. GPIO Signal Descriptions (continued)

SIGNAL NAME [1]	PIN TYPE [2]	DESCRIPTION [3]	ZCZ PIN [4]
GPIO71	IO	General Purpose Input/Output	V17
GPIO72	IO	General Purpose Input/Output	T16
GPIO73	IO	General Purpose Input/Output	P15
GPIO74	IO	General Purpose Input/Output	R16
GPIO75	IO	General Purpose Input/Output	L3
GPIO76	IO	General Purpose Input/Output	M3
GPIO77	IO	General Purpose Input/Output	B6
GPIO78	IO	General Purpose Input/Output	A4
GPIO79	IO	General Purpose Input/Output	B5
GPIO80	IO	General Purpose Input/Output	B4
GPIO81	IO	General Purpose Input/Output	A3
GPIO82	IO	General Purpose Input/Output	A2
GPIO83	IO	General Purpose Input/Output	C6
GPIO84	IO	General Purpose Input/Output	A5
GPIO85	IO	General Purpose Input/Output	L17
GPIO86	IO	General Purpose Input/Output	L18
GPIO87	IO	General Purpose Input/Output	G17
GPIO88	IO	General Purpose Input/Output	F17
GPIO89	IO	General Purpose Input/Output	G18
GPIO90	IO	General Purpose Input/Output	G15
GPIO91	IO	General Purpose Input/Output	K15
GPIO92	IO	General Purpose Input/Output	K16
GPIO93	IO	General Purpose Input/Output	K17
GPIO94	IO	General Purpose Input/Output	K18
GPIO95	IO	General Purpose Input/Output	J18
GPIO96	IO	General Purpose Input/Output	J17
GPIO97	IO	General Purpose Input/Output	H18
GPIO98	IO	General Purpose Input/Output	L16
GPIO99	IO	General Purpose Input/Output	M16

(1) GPIO134 is implemented with the I2C OD FS (Open Drain Fail Safe) voltage buffer.
(2) GPIO135 is implemented with the I2C OD FS (Open Drain Fail Safe) voltage buffer.

5.3.12 GPMC

Table 5-65. GPMC0 Signal Descriptions

SIGNAL NAME [1]	PIN TYPE [2]	DESCRIPTION [3]	ZCZ PIN [4]
GPMC0_ADVn_ALE	O	GPMC Address Valid (active low) or Address Latch Enable	B15
GPMC0_CLK (2)	IO	GPMC Clock	F17
GPMC0_CLKLB (1)	IO	GPMC Clock Loopback	H1
GPMC0_DIR	O	GPMC Data Bus Signal Direction Control	G17
GPMC0_OEn_REn	O	GPMC Output Enable (active low) or Read Enable (active low)	F15, J1
GPMC0_WEn	O	GPMC Write Enable (active low)	D18, K2
GPMC0_WPn	O	GPMC Flash Write Protect (active low)	G15
GPMC0_A0	O	GPMC Address 0 Output. Only used to effectively address 8-bit data non-multiplexed memories	K16

Table 5-65. GPMC0 Signal Descriptions (continued)

SIGNAL NAME [1]	PIN TYPE [2]	DESCRIPTION [3]	ZCZ PIN [4]
GPMC0_A1	O	GPMC Address 1 Output in A/D non-multiplexed mode and Address 17 in A/D multiplexed mode	K17
GPMC0_A2	O	GPMC Address 2 Output in A/D non-multiplexed mode and Address 18 in A/D multiplexed mode	K18
GPMC0_A3	O	GPMC Address 3 Output in A/D non-multiplexed mode and Address 19 in A/D multiplexed mode	J18
GPMC0_A4	O	GPMC Address 4 Output in A/D non-multiplexed mode and Address 20 in A/D multiplexed mode	J17
GPMC0_A5	O	GPMC Address 5 Output in A/D non-multiplexed mode and Address 21 in A/D multiplexed mode	H18
GPMC0_A6	O	GPMC Address 6 Output in A/D non-multiplexed mode and Address 22 in A/D multiplexed mode	L16
GPMC0_A7	O	GPMC Address 7 Output in A/D non-multiplexed mode and Address 23 in A/D multiplexed mode	M16
GPMC0_A8	O	GPMC Address 8 Output in A/D non-multiplexed mode and Address 24 in A/D multiplexed mode	M15
GPMC0_A9	O	GPMC Address 9 Output in A/D non-multiplexed mode and Address 25 in A/D multiplexed mode	H17
GPMC0_A10	O	GPMC Address 10 Output in A/D non-multiplexed mode and Address 26 in A/D multiplexed mode	H16
GPMC0_A11	O	GPMC Address 11 Output in A/D non-multiplexed mode and unused in A/D multiplexed mode	E16
GPMC0_A12	O	GPMC Address 12 Output in A/D non-multiplexed mode and unused in A/D multiplexed mode	F16
GPMC0_A13	O	GPMC Address 13 Output in A/D non-multiplexed mode and unused in A/D multiplexed mode	F18
GPMC0_A14	O	GPMC Address 14 Output in A/D non-multiplexed mode and unused in A/D multiplexed mode	G16
GPMC0_A15	O	GPMC Address 15 Output in A/D non-multiplexed mode and unused in A/D multiplexed mode	E17
GPMC0_A16	O	GPMC Address 16 Output in A/D non-multiplexed mode and unused in A/D multiplexed mode	E18
GPMC0_A17	O	GPMC Address 17 Output in A/D non-multiplexed mode and unused in A/D multiplexed mode	C16
GPMC0_A18	O	GPMC Address 18 Output in A/D non-multiplexed mode and unused in A/D multiplexed mode	A17
GPMC0_A19	O	GPMC Address 19 Output in A/D non-multiplexed mode and unused in A/D multiplexed mode	B18
GPMC0_A20	O	GPMC Address 20 Output in A/D non-multiplexed mode and unused in A/D multiplexed mode	B17
GPMC0_A21	O	GPMC Address 21 Output in A/D non-multiplexed mode and unused in A/D multiplexed mode	D16
GPMC0_AD0	IO	GPMC Data 0 Input/Output in A/D non-multiplexed mode and additionally Address 1 Output in A/D multiplexed mode	K4
GPMC0_AD1	IO	GPMC Data 1 Input/Output in A/D non-multiplexed mode and additionally Address 2 Output in A/D multiplexed mode	K3
GPMC0_AD2	IO	GPMC Data 2 Input/Output in A/D non-multiplexed mode and additionally Address 3 Output in A/D multiplexed mode	V17
GPMC0_AD3	IO	GPMC Data 3 Input/Output in A/D non-multiplexed mode and additionally Address 4 Output in A/D multiplexed mode	T16
GPMC0_AD4	IO	GPMC Data 4 Input/Output in A/D non-multiplexed mode and additionally Address 5 Output in A/D multiplexed mode	P15
GPMC0_AD5	IO	GPMC Data 5 Input/Output in A/D non-multiplexed mode and additionally Address 6 Output in A/D multiplexed mode	R16

Copyright © 2026 Texas Instruments Incorporated

Table 5-65. GPMC0 Signal Descriptions (continued)

SIGNAL NAME [1]	PIN TYPE [2]	DESCRIPTION [3]	ZCZ PIN [4]
GPMC0_AD6	IO	GPMC Data 6 Input/Output in A/D non-multiplexed mode and additionally Address 7 Output in A/D multiplexed mode	L3
GPMC0_AD7	IO	GPMC Data 7 Input/Output in A/D non-multiplexed mode and additionally Address 8 Output in A/D multiplexed mode	M3
GPMC0_AD8	IO	GPMC Data 8 Input/Output in A/D non-multiplexed mode and additionally Address 9 Output in A/D multiplexed mode	B6
GPMC0_AD9	IO	GPMC Data 9 Input/Output in A/D non-multiplexed mode and additionally Address 10 Output in A/D multiplexed mode	A4
GPMC0_AD10	IO	GPMC Data 10 Input/Output in A/D non-multiplexed mode and additionally Address 11 Output in A/D multiplexed mode	B5
GPMC0_AD11	IO	GPMC Data 11 Input/Output in A/D non-multiplexed mode and additionally Address 12 Output in A/D multiplexed mode	B4
GPMC0_AD12	IO	GPMC Data 12 Input/Output in A/D non-multiplexed mode and additionally Address 13 Output in A/D multiplexed mode	A3
GPMC0_AD13	IO	GPMC Data 13 Input/Output in A/D non-multiplexed mode and additionally Address 14 Output in A/D multiplexed mode	A2
GPMC0_AD14	IO	GPMC Data 14 Input/Output in A/D non-multiplexed mode and additionally Address 15 Output in A/D multiplexed mode	C6
GPMC0_AD15	IO	GPMC Data 15 Input/Output in A/D non-multiplexed mode and additionally Address 16 Output in A/D multiplexed mode	A5
GPMC0_BE0n_CLE	O	GPMC Lower-Byte Enable (active low) or Command Latch Enable	C18
GPMC0_BE1n	O	GPMC Upper-Byte Enable (active low)	D17
GPMC0_CSn0	O	GPMC Chip Select 0 (active low)	C17, J4
GPMC0_CSn1	O	GPMC Chip Select 1 (active low)	K15
GPMC0_CSn2	O	GPMC Chip Select 2 (active low)	L17
GPMC0_CSn3	O	GPMC Chip Select 3 (active low)	L18
GPMC0_WAIT0	I	GPMC External Indication of Wait	G18
GPMC0_WAIT1	I	GPMC External Indication of Wait	C15

(1) GPMC0_CLKLB is a clock loopback signal used internally for retiming purposes.
(2) The RXACTIVE bit of the MSS_IOMUX:PR0_PRU0_GPO9_CFG_REG register must be set to 0x1 and the TX_DIS bit of the MSS_IOMUX:PR0_PRU0_GPO9_CFG_REG register must be reset to 0x0 when GPMC0 is operating in synchronous mode.

5.3.13 I2C

Table 5-66. I2C0 Signal Descriptions

SIGNAL NAME [1]	PIN TYPE [2]	DESCRIPTION [3]	ZCZ PIN [4]
I2C0_SCL (2)	IOD	I2C Clock	A13
I2C0_SDA (1)	IOD	I2C Data	B13

(1) I2C0_SDA is implemented with the I2C OD FS (Open Drain Fail Safe) voltage buffer.
(2) I2C0_SCL is implemented with the I2C OD FS (Open Drain Fail Safe) voltage buffer.

Table 5-67. I2C1 Signal Descriptions

SIGNAL NAME [1]	PIN TYPE [2]	DESCRIPTION [3]	ZCZ PIN [4]
I2C1_SCL (1)	IOD	I2C Clock	B5, D7
I2C1_SDA (2)	IOD	I2C Data	A3, C8

(1) I2C1_SCL is implemented with the typical LVCMOS voltage buffer and should be properly configured to operate as an Input/Output Open Drain signal type.
(2) I2C1_SDA is implemented with the typical LVCMOS voltage buffer and should be properly configured to operate as an Input/Output Open Drain signal type.

Copyright © 2026 Texas Instruments Incorporated

Table 5-68. I2C2 Signal Descriptions

SIGNAL NAME [1]	PIN TYPE [2]	DESCRIPTION [3]	ZCZ PIN [4]
I2C2_SCL (1)	IOD	I2C Clock	C6, C7
I2C2_SDA (2)	IOD	I2C Data	A5, B7

(1) I2C2_SCL is implemented with the typical LVCMOS voltage buffer and should be properly configured to operate as an Input/Output Open Drain signal type.
(2) I2C2_SDA is implemented with the typical LVCMOS voltage buffer and should be properly configured to operate as an Input/Output Open Drain signal type.

Table 5-69. I2C3 Signal Descriptions

SIGNAL NAME [1]	PIN TYPE [2]	DESCRIPTION [3]	ZCZ PIN [4]
I2C3_SCL (2)	IOD	I2C Clock	B15, H2
I2C3_SDA (1)	IOD	I2C Data	A16, G3

(1) I2C3_SDA is implemented with the typical LVCMOS voltage buffer and should be properly configured to operate as an Input/Output Open Drain signal type.
(2) I2C3_SCL is implemented with the typical LVCMOS voltage buffer and should be properly configured to operate as an Input/Output Open Drain signal type.

Note

I2C signals that are implemented on an LVCMOS voltage buffer pin can be configured to operate as open-drain outputs by configuring the I2C module to source a constant low output and toggle the output enable. The output buffer drives low when enabled and is high impedance when disabled.

The (I2C OD FS) are the only IO voltage buffers which are fail-safe. These are implemented for I2C0 pins only. Other IOs do not allow any potential greater than (VDD + 0.3V) to be applied. This means you can not source any potential to these pins when power is off. All attached devices that can source a potential to these IOs must be powered from the same power supply that is sourcing the respective IO power rail.

5.3.14 LIN

Table 5-70. LIN0 Signal Descriptions

SIGNAL NAME [1]	PIN TYPE [2]	DESCRIPTION [3]	ZCZ PIN [4]
LIN0_RXD	IO	LIN Receive Data	A7, B6
LIN0_TXD	IO	LIN Transmit Data	A4, A6

Table 5-71. LIN1 Signal Descriptions

SIGNAL NAME [1]	PIN TYPE [2]	DESCRIPTION [3]	ZCZ PIN [4]
LIN1_RXD	IO	LIN Receive Data	A9, L3
LIN1_TXD	IO	LIN Transmit Data	B9, M3

Table 5-72. LIN2 Signal Descriptions

SIGNAL NAME [1]	PIN TYPE [2]	DESCRIPTION [3]	ZCZ PIN [4]
LIN2_RXD	IO	LIN Receive Data	B8
LIN2_TXD	IO	LIN Transmit Data	A8

Table 5-73. LIN3 Signal Descriptions

SIGNAL NAME [1]	PIN TYPE [2]	DESCRIPTION [3]	ZCZ PIN [4]
LIN3_RXD	IO	LIN Receive Data	C11
LIN3_TXD	IO	LIN Transmit Data	A11

Copyright © 2026 Texas Instruments Incorporated

Table 5-74. LIN4 Signal Descriptions

SIGNAL NAME [1]	PIN TYPE [2]	DESCRIPTION [3]	ZCZ PIN [4]
LIN4_RXD	IO	LIN Receive Data	A10, D11
LIN4_TXD	IO	LIN Transmit Data	C12, C9

5.3.15 MCAN

Table 5-75. MCAN0 Signal Descriptions

SIGNAL NAME [1]	PIN TYPE [2]	DESCRIPTION [3]	ZCZ PIN [4]
MCAN0_RX	I	MCAN Receive Data	M1
MCAN0_TX	O	MCAN Transmit Data	L1

Table 5-76. MCAN1 Signal Descriptions

SIGNAL NAME [1]	PIN TYPE [2]	DESCRIPTION [3]	ZCZ PIN [4]
MCAN1_RX	I	MCAN Receive Data	L2
MCAN1_TX	O	MCAN Transmit Data	K1

Table 5-77. MCAN2 Signal Descriptions

SIGNAL NAME [1]	PIN TYPE [2]	DESCRIPTION [3]	ZCZ PIN [4]
MCAN2_RX	I	MCAN Receive Data	A12
MCAN2_TX	O	MCAN Transmit Data	B12

Table 5-78. MCAN3 Signal Descriptions

SIGNAL NAME [1]	PIN TYPE [2]	DESCRIPTION [3]	ZCZ PIN [4]
MCAN3_RX	I	MCAN Receive Data	B7, C14
MCAN3_TX	O	MCAN Transmit Data	A15, C7

5.3.16 SPI (MCSPI)

Table 5-79. SPI0 Signal Descriptions

SIGNAL NAME [1]	PIN TYPE [2]	DESCRIPTION [3]	ZCZ PIN [4]
SPI0_CLK (1)	IO	SPI Clock (SOP2)	A11
SPI0_CS0	IO	SPI Chip Select 0	C11
SPI0_CS1	IO	SPI Chip Select 1	B7
SPI0_D0 (2)	IO	SPI Data 0 (SOP3)	C10
SPI0_D1	IO	SPI Data 1	B11

(1) The SPI0_CLK pin is also used as SOP2 bootmode configuration pin.
(2) The SPI0_D0 pin is also used as SOP3 bootmode configuration pin.

Table 5-80. SPI1 Signal Descriptions

SIGNAL NAME [1]	PIN TYPE [2]	DESCRIPTION [3]	ZCZ PIN [4]
SPI1_CLK	IO	SPI Clock	A10
SPI1_CS0	IO	SPI Chip Select 0	C9
SPI1_D0	IO	SPI Data 0	B10
SPI1_D1	IO	SPI Data 1	D9

Table 5-81. SPI2 Signal Descriptions

SIGNAL NAME [1]	PIN TYPE [2]	DESCRIPTION [3]	ZCZ PIN [4]
SPI2_CLK	IO	SPI Clock	B9
SPI2_CS0	IO	SPI Chip Select 0	A9

Copyright © 2026 Texas Instruments Incorporated

Table 5-81. SPI2 Signal Descriptions (continued)

SIGNAL NAME [1]	PIN TYPE [2]	DESCRIPTION [3]	ZCZ PIN [4]
SPI2_D0	IO	SPI Data 0	B8
SPI2_D1	IO	SPI Data 1	A8

Table 5-82. SPI3 Signal Descriptions

SIGNAL NAME [1]	PIN TYPE [2]	DESCRIPTION [3]	ZCZ PIN [4]
SPI3_CLK	IO	SPI Clock	C8
SPI3_CS0	IO	SPI Chip Select 0	D7
SPI3_D0	IO	SPI Data 0	C7
SPI3_D1	IO	SPI Data 1	B7

Table 5-83. SPI4 Signal Descriptions

SIGNAL NAME [1]	PIN TYPE [2]	DESCRIPTION [3]	ZCZ PIN [4]
SPI4_CLK	IO	SPI Clock	B14, L1
SPI4_CS0	IO	SPI Chip Select 0	A14, M1
SPI4_CS1	IO	SPI Chip Select 1	K2
SPI4_D0	IO	SPI Data 0	C12, L2
SPI4_D1	IO	SPI Data 1	D11, K1

5.3.17 MMC

Table 5-84. MMC0 Signal Descriptions

SIGNAL NAME [1]	PIN TYPE [2]	DESCRIPTION [3]	ZCZ PIN [4]
MMC0_CD	I	MMC/SD Card Detect	A5
MMC0_CLK	IO	MMC/SD Clock	B6
MMC0_CMD	IO	MMC/SD Command	A4
MMC0_WP	I	MMC/SD Write Protect	C6
MMC0_D0	IO	MMC/SD Data	B5
MMC0_D1	IO	MMC/SD Data	B4
MMC0_D2	IO	MMC/SD Data	A3
MMC0_D3	IO	MMC/SD Data	A2

5.3.18 Power Supply

Table 5-85. Power Supply Signal Descriptions

SIGNAL NAME [1]	PIN TYPE [2]	DESCRIPTION [3]	ZCZ PIN [4]
VDD	PWR	1.2V Core supply	E11, E9, F11, F9, G13, G14, G5, G6, J16, K13, K14, K5, K6, N13, N14, N5, N6, R9
VDDA18	PWR	1.8V Analog supply	R11, R8
VDDA18_LDO (1) (2)	PWR	1.8V Analog LDO Output	R6
VDDA18_OSC_PLL	PWR	1.8V OSC PLL supply	R4
VDDA33	PWR	3.3V Analog supply	P11, P7, P9
VDDAR1	PWR	1.2V SRAM Array supply	J15
VDDAR2	PWR	1.2V SRAM Array supply	D10
VDDAR3	PWR	1.2V SRAM Array supply	H3
VDDS18	PWR	1.8V IO supply	D6, E15, L4, N15

Copyright © 2026 Texas Instruments Incorporated

Table 5-85. Power Supply Signal Descriptions (continued)

SIGNAL NAME [1]	PIN TYPE [2]	DESCRIPTION [3]	ZCZ PIN [4]
VDDS18_LDO (1) (3)	PWR	1.8V Digital LDO Output	T3
VDDS33	PWR	3.3V IO supply	D12, D8, H15, H4, L15, P4, R15
VPP	PWR	eFuse ROM programming supply	N3
VSS	GND	Ground	A1, A18, E10, E12, E13, E14, E5, E6, E7, E8, F10, F12, F13, F14, F5, F6, F7, F8, G10, G11, G12, G7, G8, G9, H10, H11, H12, H13, H14, H5, H6, H7, H8, H9, J10, J11, J12, J13, J14, J5, J6, J7, J8, J9, K10, K11, K12, K7, K8, K9, L10, L11, L12, L13, L14, L5, L6, L7, L8, L9, M10, M11, M12, M13, M14, M5, M6, M7, M8, M9, N10, N11, N12, N7, N8, N9, P13, P14, P5, T2, V18
VSSA	AGND	Analog Ground	P10, P12, P6, P8, R13, R5, V1, V16

(1) See the *Layout Guidelines* sections for details on connecting this pin.
(2) PCB should directly route VDDA18_LDO to all of the VDDA18 pins and the VDDA_OSC_PLL pin.
(3) PCB should directly route VDDS18_LDO to all of the VDDS18 pins.

5.3.19 PRU-ICSS

Table 5-86. PRU-ICSS ECAP Signal Descriptions

SIGNAL NAME [1]	PIN TYPE [2]	DESCRIPTION [3]	ZCZ PIN [4]
PR0_ECAP0_APWM_OUT	O	PRU-ICSS Enhanced Capture (ECAP) Input or ECAP Auxiliary PWM (APWM) Output	D14

Table 5-87. PRU-ICSS GPIO Signal Descriptions

SIGNAL NAME [1] ((1))	PIN TYPE [2]	DESCRIPTION [3]	ZCZ PIN [4]
PR0_PRU0_GPIO0	IO	PRU0 General Purpose Input/Output	K17
PR0_PRU0_GPIO1	IO	PRU0 General Purpose Input/Output	K18
PR0_PRU0_GPIO2	IO	PRU0 General Purpose Input/Output	J18
PR0_PRU0_GPIO3	IO	PRU0 General Purpose Input/Output	J17
PR0_PRU0_GPIO4	IO	PRU0 General Purpose Input/Output	K16
PR0_PRU0_GPIO5	IO	PRU0 General Purpose Input/Output	G17
PR0_PRU0_GPIO6	IO	PRU0 General Purpose Input/Output	K15
PR0_PRU0_GPIO8	IO	PRU0 General Purpose Input/Output	G15
PR0_PRU0_GPIO9	IO	PRU0 General Purpose Input/Output	F17
PR0_PRU0_GPIO10	IO	PRU0 General Purpose Input/Output	G18
PR0_PRU0_GPIO11	IO	PRU0 General Purpose Input/Output	M16
PR0_PRU0_GPIO12	IO	PRU0 General Purpose Input/Output	M15
PR0_PRU0_GPIO13	IO	PRU0 General Purpose Input/Output	H17

Copyright © 2026 Texas Instruments Incorporated

Table 5-87. PRU-ICSS GPIO Signal Descriptions (continued)

SIGNAL NAME [1] ([(1)])	PIN TYPE [2]	DESCRIPTION [3]	ZCZ PIN [4]
PR0_PRU0_GPIO14	IO	PRU0 General Purpose Input/Output	H16
PR0_PRU0_GPIO15	IO	PRU0 General Purpose Input/Output	L16
PR0_PRU0_GPIO16	IO	PRU0 General Purpose Input/Output	H18
PR0_PRU1_GPIO0	IO	PRU1 General Purpose Input/Output	F18
PR0_PRU1_GPIO1	IO	PRU1 General Purpose Input/Output	G16
PR0_PRU1_GPIO2	IO	PRU1 General Purpose Input/Output	E17
PR0_PRU1_GPIO3	IO	PRU1 General Purpose Input/Output	E18
PR0_PRU1_GPIO4	IO	PRU1 General Purpose Input/Output	F16
PR0_PRU1_GPIO5	IO	PRU1 General Purpose Input/Output	F15
PR0_PRU1_GPIO6	IO	PRU1 General Purpose Input/Output	E16
PR0_PRU1_GPIO7	IO	PRU1 General Purpose Input/Output	A16
PR0_PRU1_GPIO8	IO	PRU1 General Purpose Input/Output	D18
PR0_PRU1_GPIO9	IO	PRU1 General Purpose Input/Output	C18
PR0_PRU1_GPIO10	IO	PRU1 General Purpose Input/Output	D17
PR0_PRU1_GPIO11	IO	PRU1 General Purpose Input/Output	B18
PR0_PRU1_GPIO12	IO	PRU1 General Purpose Input/Output	B17
PR0_PRU1_GPIO13	IO	PRU1 General Purpose Input/Output	D16
PR0_PRU1_GPIO14	IO	PRU1 General Purpose Input/Output	C17
PR0_PRU1_GPIO15	IO	PRU1 General Purpose Input/Output	A17
PR0_PRU1_GPIO16	IO	PRU1 General Purpose Input/Output	C16
PR0_PRU1_GPIO17	IO	PRU1 General Purpose Input/Output	D13
PR0_PRU1_GPIO18	IO	PRU1 General Purpose Input/Output	C15
PR0_PRU1_GPIO19	IO	PRU1 General Purpose Input/Output	D15

(1) PR0_PRU0_GPIO**7**, PR0_PRU0_GPIO**17**, PR0_PRU0_GPIO**18**, and PR0_PRU0_GPIO**19**, signals are not pinned out. The equivalent PR0_PRU**1**_GPIO signals are pinned out and available.

Table 5-88. PRU-ICSS IEP Signal Descriptions

SIGNAL NAME [1]	PIN TYPE [2]	DESCRIPTION [3]	ZCZ PIN [4]
PR0_IEP0_EDC_SYNC_OUT0	O	PRU-ICSS Industrial Ethernet Distributed Clock Sync Output	D15
PR0_IEP0_EDC_SYNC_OUT1	O	PRU-ICSS Industrial Ethernet Distributed Clock Sync Output	A16
PR0_IEP0_EDIO_DATA_IN_OUT30	IO	PRU-ICSS Industrial Ethernet Digital I/O Data Input/Output	D13
PR0_IEP0_EDIO_DATA_IN_OUT31	IO	PRU-ICSS Industrial Ethernet Digital I/O Data Input/Output	C15

Table 5-89. PRU-ICSS MDIO Signal Descriptions

SIGNAL NAME [1]	PIN TYPE [2]	DESCRIPTION [3]	ZCZ PIN [4]
PR0_MDIO0_MDC	O	PRU-ICSS MDIO Clock	L18
PR0_MDIO0_MDIO	IO	PRU-ICSS MDIO Data	L17

Table 5-90. PRU-ICSS UART Signal Descriptions

SIGNAL NAME [1]	PIN TYPE [2]	DESCRIPTION [3]	ZCZ PIN [4]
PR0_UART0_CTSn	I	PRU-ICSS UART Clear to Send (Active Low)	F17
PR0_UART0_RTSn	O	PRU-ICSS UART Request to Send (Active Low)	G18
PR0_UART0_RXD	I	PRU-ICSS UART Receive Data	C18
PR0_UART0_TXD	O	PRU-ICSS UART Transmit Data	D17

Copyright © 2026 Texas Instruments Incorporated

5.3.20 QSPI

Table 5-91. QSPI0 Signal Descriptions

SIGNAL NAME [1]	PIN TYPE [2]	DESCRIPTION [3]	ZCZ PIN [4]
QSPI0_CLK	O	QSPI Clock	N2
QSPI0_CSn0	O	QSPI Chip Select 0	P1
QSPI0_CSn1	O	QSPI Chip Select 1	R3
QSPI0_D0 (1)	IO	QSPI Data bit 0 (SOP0)	N1
QSPI0_D1 (2)	I	QSPI Data bit 1 (SOP1)	N4
QSPI0_D2	I	QSPI Data bit 2	M4
QSPI0_D3	I	QSPI Data bit 3	P3

(1) The QSPI0_D0 pin is also used as SOP0 boot mode configuration pin.
(2) The QSPI0_D1 pin is also used as SOP1 boot mode configuration pin.

5.3.21 Reserved and No Connect

Table 5-92. Reserved Signal Descriptions

SIGNAL NAME [1]	PIN TYPE [2]	DESCRIPTION [3]	ZCZ PIN [4]
RSVD_T4	RSVD	Reserved (RSVD_T4). This pin must be connected to ground (VSS).	T4
RSVD_U1	RSVD	Reserved (RSVD_U1). This pin must be connected to ground (VSS).	U1
RSVD_U3	RSVD	Reserved (RSVD_U3). This pin must be left unconnected.	U3
RSVD_V2	RSVD	Reserved (RSVD_V2). This pin must be left unconnected.	V2

5.3.22 SDFM

Table 5-93. SDFM0 Signal Descriptions

SIGNAL NAME [1]	PIN TYPE [2]	DESCRIPTION [3]	ZCZ PIN [4]
SDFM0_CLK0	I	SDFM Clock 0 Input	B16
SDFM0_CLK1	I	SDFM Clock 1 Input	A16
SDFM0_CLK2	I	SDFM Clock 2 Input	B15
SDFM0_CLK3	I	SDFM Clock 3 Input	A15
SDFM0_D0	I	SDFM Data 0 Input	D14
SDFM0_D1	I	SDFM Data 1 Input	D13
SDFM0_D2	I	SDFM Data 2 Input	C13
SDFM0_D3	I	SDFM Data 3 Input	C14

Table 5-94. SDFM1 Signal Descriptions

SIGNAL NAME [1]	PIN TYPE [2]	DESCRIPTION [3]	ZCZ PIN [4]
SDFM1_CLK0	I	SDFM Clock 0 Input	B14, B6
SDFM1_CLK1	I	SDFM Clock 1 Input	B5, C12
SDFM1_CLK2 (1)	I	SDFM Clock 2 Input	A3, B13
SDFM1_CLK3 (2)	I	SDFM Clock 3 Input	A13, C6
SDFM1_D0	I	SDFM Data 0 Input	A14, A4
SDFM1_D1	I	SDFM Data 1 Input	B4, D11
SDFM1_D2	I	SDFM Data 2 Input	A2, B12
SDFM1_D3	I	SDFM Data 3 Input	A12, A5

(1) SDFM1_CLK2 is implemented with the I2C OD FS (Open Drain Fail Safe) voltage buffer when using ball B13.
(2) SDFM1_CLK3 is implemented with the I2C OD FS (Open Drain Fail Safe) voltage buffer when using ball A13.

Copyright © 2026 Texas Instruments Incorporated

5.3.23 System and Miscellaneous

5.3.23.1 Boot Mode Configuration

Table 5-95. Boot Mode Signal Descriptions

SIGNAL NAME [1]	PIN TYPE [2]	DESCRIPTION [3]	ZCZ PIN [4]
SOP0	I	Boot Mode configuration bit 0 (QSPI0_D0)	N1
SOP1	I	Boot Mode configuration bit 1 (QSPI0_D1)	N4
SOP2	I	Boot Mode configuration bit 2 (SPI0_CLK)	A11
SOP3	I	Boot Mode configuration bit 3 (SPI0_D0)	C10

5.3.23.2 Clocking

Table 5-96. XTAL Signal Descriptions

SIGNAL NAME [1]	PIN TYPE [2]	DESCRIPTION [3]	ZCZ PIN [4]
XTAL_XI (1)	I	External Crystal (XTAL) Input	T1
XTAL_XO (1)	O	External Crystal (XTAL) Output	R1

(1) The XTAL interface requires a 25 MHz clock source.

Table 5-97. Output Clock Signal Descriptions

SIGNAL NAME [1]	PIN TYPE [2]	DESCRIPTION [3]	ZCZ PIN [4]
CLKOUT0	O	Output Clock 0	M2
CLKOUT1	O	Output Clock 1	B16

Table 5-98. External Reference Clock Signal Descriptions

SIGNAL NAME [1]	PIN TYPE [2]	DESCRIPTION [3]	ZCZ PIN [4]
EXT_REFCLK0	I	External Reference Clock Input	P2

5.3.23.3 SYSTEM

Table 5-99. System Signal Descriptions

SIGNAL NAME [1]	PIN TYPE [2]	DESCRIPTION [3]	ZCZ PIN [4]
PORz	I	Device Power-On (PORz) cold reset	R2
SAFETY_ERRORn	IO	ESM Safety Error Signal	D4
WARMRSTn	IO	Warm Reset Request (Input) / Warm Reset Status (Output)	C3

Note

The SAFETY_ERRORn signal is implemented on an LVCMOS voltage buffer pin can be configured to operate as open-drain outputs by configuring the ESM module to source a constant low output and toggle the output enable. The output buffer drives low when enabled and is high impedance when disabled.

The (I2C OD FS) are the only IO voltage buffers which are fail-safe. These are implemented for I2C0 pins only. Other IOs do not allow any potential greater than (VDD + 0.3V) to be applied. This means you cannot source any potential to these pins when power is off. All attached devices that can source a potential to these IOs must be powered from the same power supply that is sourcing the respective IO power rail.

Copyright © 2026 Texas Instruments Incorporated

5.3.23.4 VMON

Table 5-100. VMON Signal Descriptions

SIGNAL NAME [1]	PIN TYPE [2]	DESCRIPTION [3]	ZCZ PIN [4]
VSYS_MON (1)	PWR	External Voltage Monitor with 0.9 V (+/-3%) setpoint.	U2

(1) See the *Electrical Specifications - Safety Comparators* section for additional details on this pin.

5.3.24 UART

Table 5-101. UART0 Signal Descriptions

SIGNAL NAME [1]	PIN TYPE [2]	DESCRIPTION [3]	ZCZ PIN [4]
UART0_CTSn	I	UART Clear to Send (active low)	A5, B7
UART0_RTSn	O	UART Request to Send (active low)	C6, C7
UART0_RXD	I	UART Receive Data	A7, B6
UART0_TXD	O	UART Transmit Data	A4, A6

Table 5-102. UART1 Signal Descriptions

SIGNAL NAME [1]	PIN TYPE [2]	DESCRIPTION [3]	ZCZ PIN [4]
UART1_CTSn	I	UART Clear to Send (active low)	G4
UART1_DCDn	I	UART Data Carrier Detect (Active Low)	J4
UART1_DSRn	I	UART Data Set Ready (Active Low)	V17
UART1_DTRn	O	UART Data Terminal Ready (Active Low)	K3
UART1_RIn	I	UART Ring Indicator	K4
UART1_RTSn	O	UART Request to Send (active low)	B12, J2
UART1_RXD	I	UART Receive Data	A9, L3
UART1_TXD	O	UART Transmit Data	B9, M3

Table 5-103. UART2 Signal Descriptions

SIGNAL NAME [1]	PIN TYPE [2]	DESCRIPTION [3]	ZCZ PIN [4]
UART2_CTSn	I	UART Clear to Send (active low)	H1
UART2_RTSn	O	UART Request to Send (active low)	A12, J3
UART2_RXD	I	UART Receive Data	B5, B8
UART2_TXD	O	UART Transmit Data	A3, A8

Table 5-104. UART3 Signal Descriptions

SIGNAL NAME [1]	PIN TYPE [2]	DESCRIPTION [3]	ZCZ PIN [4]
UART3_CTSn	I	UART Clear to Send (active low)	K2
UART3_RTSn	O	UART Request to Send (active low)	A2, J1
UART3_RXD	I	UART Receive Data	C11, D15
UART3_TXD	O	UART Transmit Data	A11, C15

Table 5-105. UART4 Signal Descriptions

SIGNAL NAME [1]	PIN TYPE [2]	DESCRIPTION [3]	ZCZ PIN [4]
UART4_CTSn	I	UART Clear to Send (active low)	A14
UART4_RTSn	O	UART Request to Send (active low)	B14
UART4_RXD	I	UART Receive Data	A10, D11, H2
UART4_TXD	O	UART Transmit Data	C12, C9, G3

Copyright © 2026 Texas Instruments Incorporated

Table 5-106. UART5 Signal Descriptions

SIGNAL NAME [1]	PIN TYPE [2]	DESCRIPTION [3]	ZCZ PIN [4]
UART5_CTSn	I	UART Clear to Send (active low)	D13
UART5_RTSn	O	UART Request to Send (active low)	A16
UART5_RXD	I	UART Receive Data	A15, C13, D9, R16
UART5_TXD	O	UART Transmit Data	B10, B15, P15

5.3.25 XBAR

Table 5-107. Output XBAR Signal Descriptions

SIGNAL NAME [1]	PIN TYPE [2]	DESCRIPTION [3]	ZCZ PIN [4]
XBAROUT0	O	OUTPUTXBAR Signal 0	R3
XBAROUT1	O	OUTPUTXBAR Signal 1	C9
XBAROUT2	O	OUTPUTXBAR Signal 2	A10
XBAROUT3	O	OUTPUTXBAR Signal 3	B10
XBAROUT4	O	OUTPUTXBAR Signal 4	D9
XBAROUT5	O	OUTPUTXBAR Signal 5	A9
XBAROUT6	O	OUTPUTXBAR Signal 6	B9
XBAROUT7	O	OUTPUTXBAR Signal 7	D7
XBAROUT8	O	OUTPUTXBAR Signal 8	C8
XBAROUT9	O	OUTPUTXBAR Signal 9	C7
XBAROUT10	O	OUTPUTXBAR Signal 10	B7
XBAROUT11	O	OUTPUTXBAR Signal 11	D16
XBAROUT12	O	OUTPUTXBAR Signal 12	C17
XBAROUT13	O	OUTPUTXBAR Signal 13	D15
XBAROUT14	O	OUTPUTXBAR Signal 14	C15
XBAROUT15	O	OUTPUTXBAR Signal 15	P2

Copyright © 2026 Texas Instruments Incorporated

5.4 Pin Connectivity Requirements

This section describes connectivity requirements for package balls that have specific connectivity requirements and package balls that can be unused.

Note

All power balls must be supplied with the voltages specified in the *Recommended Operating Conditions* section, unless otherwise specified in *Signal Descriptions*.

For additional clarification, "leave unconnected" or "no connect" (NC) mean **no** signal traces are recommended to be connected to these device ball numbers.

Table 5-108. Pin Connectivity Requirements

BALL NUMBER	BALL NAME	PIN CONNECTIVITY REQUIREMENTS
D4	SAFETY_ERRORn	Each of these balls must be connected to ground (VSS) through separate external pull resistors to ensure they are held to a valid logic low level if a PCB signal trace is connected and not actively driven by an attached device. The internal pull-down may be used to hold a valid logic low level if no PCB signal trace is connected to the ball.
B3 C5 D5	TCK TDI TMS	Each of these balls must be connected to the corresponding power supply[(1)] through separate external pull resistors to ensure these balls are held to a valid logic high level if a PCB signal trace is connected and not actively driven by an attached device. The internal pull-up may be used to hold a valid logic high level if no PCB signal trace is connected to the ball.
A13 B13	I2C0_SCL I2C0_SDA	Each of these balls must be connected to the corresponding power supply[(1)] through separate external pull resistors to ensure these balls are held to a valid logic high level.
N1 N4 A11 C10	QSPI0_D0 (SOP0) QSPI0_D1 (SOP1) SPI0_CLK (SOP2) SPI0_D0 (SOP3)	Each of these balls must be connected to the corresponding power supply[(1)] or ground (VSS) through separate external pull resistors to ensure these balls are held to a valid logic high or low level as appropriate to select the desired device boot mode.
ADC ZCZ PIN	ADC[0:4]_AIN[0:5]	Any unused ADCx_AINy input ball for any ADC instance (ADC[0:4]_AIN[0:5]) must be connected (shorted) directly to ground (VSS).
U16 T15	ADC_CAL0 ADC_CAL1	If all ADCx_AINy inputs for all ADC instances (ADC[0:4]_AIN[0:5]) are not used, the ADC_CAL[0:1] analog ball must be connected (shorted) directly to ground (VSS).
U2	VSYS_MON	If VSYS_MON is not used, this ball may be connected (shorted) directly to ground (VSS).
LVCMOS ZCZ PIN	Any LVCMOS Voltage Buffer Pin	If a pin has an associated IOMUX Pad Configuration Registration then the ball may remain unconnected. After PORz, the LVCMOS voltage buffer is configured to a default state compatible with an unconnected ball.

(1) To determine which power supply is associated with any IO, see POWER column of the *Pin Attributes* table.

Note

Internal pull resistors are weak and can possibly not source enough current to maintain a valid logic level for some operating conditions. This can be the case when connected to components with leakage to the opposite logic level, or when external noise sources couple to signal traces attached to balls which are only pulled to a valid logic level by the internal resistor. Therefore, external pull resistors can be required to hold a valid logic level on balls with external connections.

If balls are allowed to float between valid logic levels, the input buffer can enter a high-current state which can damage the IO cell.

6 Specifications

6.1 Absolute Maximum Ratings

over operating junction temperature range (unless otherwise noted)[1][2]

PARAMETER		MIN	MAX	UNIT
VDD	1.2V SOC core supply	–0.5	1.5	V
VDDAR1	1.2V SRAM Array Supply 1	–0.5	1.5	V
VDDAR2	1.2V SRAM Array Supply 2	–0.5	1.5	V
VDDAR3	1.2V SRAM Array Supply 3	–0.5	1.5	V
VDDS18	1.8V IO Bias Supply from Bias LDO routed through Board	–0.5	2.1	V
VDDS33	3.3V IO Supply	–0.5	4.0	V
VDDA18_OSC_PLL	1.8V Analog Supply for PLL. Routed from the 1.8V Analog LDO out through Board	–0.5	2.1	V
VDDA33	Analog 3.3V Supply	–0.5	4.0	V
VDDA18	1.8V Analog Supply. Routed from the 1.8V Analog LDO out through Board	–0.5	2.1	V
IO Pin Steady State Voltage	3.3V LVCMOS IO Buffer	–0.3	VDDS33[3] + 0.3	V
	3.3V I2C Open-Drain IO Buffers	–0.3	VDDS33[3] + 0.3	V
	XTAL Pad	–0.5	2.1	V
Transient Overshoot and Undershoot	All Other IO Terminals	–0.3	VDDS33[3] + 0.2 × VDDS33[3] for up to 20% of signal period	V
	XTAL Pad 20% of VDDA18_OSC_PLL for up to 20% of signal period		0.2 × VDDA18_OSC_PLL	V
Latch Up Performance Class II (150°C)	Latch-up I-test Performance (Current-Pulse Injection on each IO pin)		±100	mA
	Latch-up Overvoltage Performance (Voltage Injection on each IO pin)		±100	mA
Output current	Digital output (per pin), I_{OUT}	–20	20	mA
Storage temperature[4]	T_{stg}	–55	155	°C

(1) Operation outside the Absolute Maximum Ratings may cause permanent device damage. Absolute Maximum Ratings do not imply functional operation of the device at these or any other conditions beyond those listed under Recommended Operating Conditions. If used outside the Recommended Operating Conditions but within the Absolute Maximum Ratings, the device may not be fully functional, and this may affect device reliability, functionality, performance, and shorten the device lifetime.
(2) All voltage values are with respect to VSS, unless otherwise noted.
(3) VDDS33 is the voltage on the corresponding power-supply pin(s) for the IC.
(4) Long-term high-temperature storage or extended use at maximum temperature conditions may result in a reduction of overall device life. For additional information, see the *Semiconductor and IC Package Thermal Metrics Application Report*.

Copyright © 2026 Texas Instruments Incorporated

6.2 Electrostatic Discharge (ESD) Extended Automotive Ratings

over recommended operating conditions (unless otherwise noted)

				VALUE	UNIT
$V_{(ESD)}$	Electrostatic Discharge (ESD)	Human body model (HBM), per AEC-Q100-002[1]		±2000	V
		Charged device model (CDM), per AEC-Q100-011	All pins	±500	
			Corner balls (A1, A18, V1, V18)	±750	

(1) AEC Q100-002 indicates that HBM stressing shall be in accordance with the ANSI/ESDA/JEDEC JS-001 specification

6.3 Electrostatic Discharge (ESD) Industrial Ratings

over recommended operating conditions (unless otherwise noted)

			VALUE	UNIT
$V_{(ESD)}$	Electrostatic Discharge (ESD)	Human-body model (HBM), per ANSI/ESDA/JEDEC JS-001[1]	±2000	V
		Charged-device model (CDM), per ANSI/ESDA/JEDEC JS-002[2]	±500	

(1) JEDEC document JEP155 states that 500-V HBM allows safe manufacturing with a standard ESD control process.
(2) JEDEC document JEP157 states that 250-V CDM allows safe manufacturing with a standard ESD control process.

6.4 Power-On Hours (POH) Summary

over recommended operating conditions (unless otherwise noted)[1][2][3]

PARAMETER	INDUSTRIAL	EXTENDED AUTOMOTIVE
POH @ Temp Profile	100K @ 97°C (100% @ 97°C) 70K @ 105°C (100% @ 105°C)	20K @ Automotive Temp Profile[4]

(1) This information is provided solely for your convenience and does not extend or modify the warranty provided under TI's standard terms and conditions for TI semiconductor products.
(2) Unless specified in the table above, all voltage domains and operating conditions are supported in the device at the noted temperatures.
(3) POH is a function of voltage, temperature, and time. Usage at higher voltages and temperatures will result in a reduction in POH.
(4) See *Automotive Temperature Profile* section

6.4.1 Automotive Temperature Profile

T_J (°C)	HOURS	DAYS	YEARS	PERCENT OF TIME
–40	1200	≅50	≅0.14	6%
75	4000	≅167	≅0.46	20%
95	13000	≅541	≅1.48	65%
130	1600	≅67	≅0.18	8%
150	200	≅8.5	≅0.023	1%
Total	20000	≅833	≅2.28	100%

Copyright © 2026 Texas Instruments Incorporated

6.5 Recommended Operating Conditions

over operating junction temperature range (unless otherwise noted)

PARAMETER	DESCRIPTION		MIN	NOM	MAX	UNIT
VDD	1.2V SOC Core Supply		1.140	1.200	1.260	V
VDDAR1, VDDAR2, VDDAR3	SRAM Array Supplies		1.140	1.200	1.260	V
VDDS18	1.8V IO Bias Supply from Bias LDO routed through board		1.710	1.800	1.890	V
VDDS33	3.3V IO Supply		3.135	3.300	3.465	V
VDDA18_OSC_PLL	1.8V Analog supply for PLL. Routed from the Analog LDO out through board		1.710	1.800	1.890	V
VDDA33	Analog 3.3V Supply		3.135	3.300	3.465	V
VDDA18	1.8V Analog supply. Routed from 1.8V Analog LDO out through Board		1.710	1.800	1.890	V
T_J	Operating junction temperature range	Industrial A	–40		105	°C
		Automotive I	–40		125	
		Extended Automotive M	–40		150	

6.6 Operating Performance Points

This section describes the operating conditions of the device. This section also contains the description of each Operating Performance Point (OPP) for processor clocks, device core clocks, and available memory.

DEVICE	GRADE	RAM (MB)	R5FSS (MHz)	HSM (MHz)	ICSS (MHz)	INFRA[(1)] (MHz)
AM263x	N	1	400	200	200	200
AM263x	O or K	2	400	200	200	200
AM263x	P	2	200	200	200	200

(1) Infrastructure includes all other modules and IP integrated in the device (such as CBASS/Interconnect and other SoC level peripherals) unless otherwise noted in the table.

Copyright © 2026 Texas Instruments Incorporated

6.7 Power Consumption Summary

Section 6.7.1, *Power Consumption - Maximum* shows the maximum current consumed by each rail and should be used for power supply selection. Section 6.7.2, *Power Consumption - Typical* shows the typical power consumption by Module. Section 6.7.3, *Power Consumption - Traction Inverter* shows the nominal power consumption of the SoC at different Junction Temperatures for a Traction Inverter application.

For application specific power usage estimates, reference the **AM263x Power Estimation Tool Application Note**.

6.7.1 Power Consumption - Maximum

over recommended operating conditions (unless otherwise noted)

SUPPLY NAME	PARAMETER	MIN	MAX[(1)]	UNIT
VDD + VDDARn	Maximum Current Rating for Core Domain		2.5	A
VDDS33	Maximum Current Rating for IO supply		200	mA
VDDA33	Maximum Current Rating for 3.3-V Analog supply		100	mA

(1) The maximum values show the maximum possible current needed for each power rail, and are only intended for power supply selection. For power consumption in typical applications, see *Power Consumption - Typical*.

6.7.2 Power Consumption - Typical

Typical usecase power consumption summary, T_J = 85°C

PARAMETER		TYP	MAX	UNIT
Power Consumption	Cores and Memory	360		mW
	Infrastructure	424		mW
	Peripherals	258		mW
	Total	1042		mW

6.7.3 Power Consumption - Traction Inverter

Traction Inverter Application Power Consumption Across Temperature

PARAMETER		TYP	MAX	UNIT
Power Consumption	T_J = 85°C	1042		mW
	T_J = 105°C	1120		mW
	T_J = 125°C	1232		mW
	T_J = 150°C	1460		mW

Copyright © 2026 Texas Instruments Incorporated

6.8 Electrical Characteristics

Note

The interfaces or signals described in Section 6.8.1*Digital and Analog IO Electrical Characteristics* through Section 6.8.6*Power Management Unit (PMU)* correspond to the interfaces or signals available in multiplexing mode 0 (Primary Function).

All interfaces or signals multiplexed on the balls described in these tables have the same DC electrical characteristics, unless multiplexing involves a PHY and GPIO combination, in which case different DC electrical characteristics are specified for the different multiplexing modes (Functions).

6.8.1 Digital and Analog IO Electrical Characteristics

over recommended operating conditions (unless otherwise noted)

PARAMETER		MIN	TYP	MAX	UNIT
PORz IO					
V_{IH}	High-Level Input Voltage	1.35			V
V_{IL}	Low-Level Input Voltage			0.5	V
V_{HYS}	Hysteresis Voltage at an Input	0.070			V
I_L	Input Leakage Current	–2		2	µA
Warm Reset IO					
V_{IH}	High-Level Input Voltage	2			V
V_{IL}	Low-Level Input Voltage			0.8	V
V_{HYS}	Hysteresis Voltage at an Input	0.347			V
V_{OL}	Low Level Output Voltage, Driver Enabled : I_{OL} = 6 mA			0.45	V
I_L	Input Leakage Current, Receiver Disabled, Pull Disabled	–57			µA
TCK IO					
V_{IH}	High-Level Input Voltage	2.15			V
V_{IL}	Low-Level Input Voltage			0.55	V
V_{HYS}	Hysteresis Voltage at an Input	0.4			V
I_L	Input Leakage Current, Receiver Disabled, Pull Disabled	–3.9	8.9	17.2	µA
	Input Leakage Current, Receiver Disabled, Pullup Enabled		106.9	128.2	µA
	Input Leakage Current, Receiver Disabled, Pulldown Enabled		100.3	130.3	µA
I2C OD IOs					
V_{IH}	High-Level Input Voltage	2			V
V_{IL}	Low-Level Input Voltage			0.8	V
V_{HYS}	Hysteresis Voltage at an Input	0.165			V
I_L	Input Leakage Current, Receiver Disabled, Pull Disabled	–18		18	µA
V_{OL}	Low Level Output Voltage, Driver Enabled : I_{OL} = 3 mA			0.45	V
All Other LVCMOS					
V_{IH}	High- Level Input Voltage	2			V
V_{IL}	Low-Level Input Voltage			0.8	V
V_{HYS}	Hysteresis Voltage at an Input	0.265			V
V_{OL}	Low Level Output Voltage, Driver Enabled : I_{OL} = 6 mA			0.45	V
V_{OH}	High Level Output Voltage, Driver Enabled : I_{OH} = 6 mA	VDDS33[(1)] – 0.45			V

Copyright © 2026 Texas Instruments Incorporated

over recommended operating conditions (unless otherwise noted)

PARAMETER		MIN	TYP	MAX	UNIT
I_L	Input Leakage Current, Receiver Disabled, Pull Disabled	–18		18	µA
	Input Leakage Current, Receiver Disabled, Pullup Enabled	–243	–100	–19	µA
	Input Leakage Current, Receiver Disabled, Pulldown Enabled	51	100	210	µA

(1) VDDS33 is the voltage on the corresponding power-supply pin on the IC.

6.8.2 Analog-to-Digital Converter (ADC)

over operating junction temperature range (unless otherwise noted)

PARAMETER	TEST CONDITIONS	MIN	TYP	MAX	UNIT
V_{REFHI}		1.71	1.8	1.89	V
Input Conversion Range (Vin+, Vin-)	Must be < VDDA33	0		32/18 × V_{REFHI}	V
Power-up time				500	µs
Gain error		–5	±3	5	LSBs
Offset error		–4	±2	4	LSBs
Channel-to-channel gain error			±4		LSBs
Channel-to-channel offset error			±2		LSBs
ADC-to-ADC gain error	Same reference group		±4		LSBs
ADC-to-ADC offset error	Same reference group		±2		LSBs
DNL	Controlled environment to minimize input noise	–1	±0.5	1	LSBs
INL	Controlled environment to minimize input noise	–2	±1.0	2	LSBs
SNR	Controlled environment to minimize input noise		68		dB
ENOB (Synchronous Operation)			11		bits
ENOB (Asynchronous Operation)			9.7		bits
ADC-to-ADC isolation	Synchronous operation	–10		10	LSBs
V_{REFHI} input current			400		µA
Conversion time				250	ns
Input Leakage			0.1	5	µA
Power supply (VDDA33)		3.13	3.3	3.46	V
Power supply (VDDA18)		1.71	1.8	1.89	V
Power Consumption (VDDA33)			200		µA
Power Consumption (VDDA18)			700		µA
Maximum ADCCLK frequency	With 50% duty cycle. Minimum pulse width must be maintained at 7.5ns		50	66.667	MHz
Sample time		75			ns

6.8.3 Comparator Subsystem A (CMPSSA)

SUBGROUP	PARAMETER	MIN	TYP	MAX	UNIT
Comparator	Power-up time			10	µs
	Comparator input range	0.1		VDDA33[(1)] – 50mV	V
	Input referred offset error	–20		20	mV
	Hysteresis (H1)		NA		LSB
	Hysteresis (H2)		15		LSB
	Hysteresis (H3)		35		LSB
	Hysteresis (H4)		55		LSB
	Propagation delay		21	50	ns
DAC	DAC_VREF reference voltage	1.71	1.8	1.89	V
	DAC output range	0.1		Minimum of 33/18 × DAC_VREF or VDDA33[(1)] – 50mV	V
	Static offset error	–45		45	mV
	Static gain error	–2		2	% of FSR
	Static DNL	>–1		4	LSB
	Static INL	–16		16	LSB
	Settling time			1	µs
	Resolution		12		bits
	DAC output disturbance (comparator trip kickback)	–100		100	LSB
	DAC output disturbance (comparator trip kickback)		200		ns
	DAC_VREF loading		37		kΩ
Common	Input Leakage		0.1	5	µA
	Power supply (VDDA33)	3.13	3.3	3.46	V
	Power supply (VDDA18)	1.71	1.8	1.89	V
	Power consumption (VDDA33)		900		µA
	Power consumption (VDDA18)		120		µA
	Failsafe Input current injection			10	mA

(1) VDDA33 is the voltage on the corresponding power-supply pin(s) on the IC.

Copyright © 2026 Texas Instruments Incorporated

6.8.4 Comparator Subsystem B (CMPSSB)

SUBGROUP	PARAMETER	MIN	TYP	MAX	UNIT
Comparator	Power-up time			10	µs
	Comparator input range	0.1		VDDA33[(1)] – 50mV	V
	Input referred offset error	–20		20	mV
	Hysteresis (H1)		NA		LSB
	Hysteresis (H2)		15		LSB
	Hysteresis (H3)		35		LSB
	Hysteresis (H4)		55		LSB
	Propagation delay		21	50	ns
DAC	DAC_VREF reference voltage	1.71	1.8	1.89	V
	DAC output range	0.1		Minimum of 33/18 × DAC_VREF or VDDA33[(1)] – 50mV	V
	Static offset error	–45		45	mV
	Static gain error	–2		2	% of FSR
	Static DNL	>–1		4	LSB
	Static INL	–16		16	LSB
	Settling time			1	µs
	Resolution		12		bits
	DAC output disturbance (comparator trip kickback)	–100		100	LSB
	DAC output disturbance (comparator trip kickback)		200		ns
	DAC_VREF loading		37		kΩ
Common	Input Leakage		0.1	5	µA
	Power supply (VDDA33)	3.13	3.3	3.46	V
	Power supply (VDDA18)	1.71	1.8	1.89	V
	Power consumption (VDDA33)		900		µA
	Power consumption (VDDA18)		120		µA
	Failsafe input current injection			10	mA

(1) VDDA33 is the voltage on the corresponding power-supply pin(s) on the IC.

6.8.5 Digital-to-Analog Converter (DAC)

over operating junction temperature range (unless otherwise noted)

PARAMETER	TEST CONDITIONS	MIN	TYP	MAX	UNIT
Power-up time				1	µs
DAC_VREF		1.71	1.8	1.89	V
Voltage output range		0.3		VDDA33[(1)] – 0.3	V
Trimmed offset error	Offset is checked at Midpoint (code 2048)	–10		10	mV
Gain error	DAC_VREF = 1.8V	–2.5		2.5	% of FSR
DNL	Endpoint corrected	–1		1	LSB
INL	Endpoint corrected	–20		20	LSB
Settling time	Settling to 2 LSBs (~1.6mV) after 0.3V-to-3V transition		2		µs
Resolution			12		bits
Capacitive load	Output drive capability			100	pF
Resistive load	Output drive capability	5			kΩ
DAC_VREF loading	DAC_VREF		64		kΩ
Output noise (100 Hz- 100 KHz)	Integrated noise from 100 Hz to 100 kHz		1		mVrms
SNR @ 1KHz	2MHz DACVALA update rate, 200kHz output filter		60		dB
Power supply (VDDA33)		3.13	3.3	3.46	V
Power supply (VDDA18)		1.71	1.8	1.89	V
Power Consumption (VDDA33)			850		µA
Power Consumption (VDDA18)			35		µA

(1) VDDA33 is the voltage on the corresponding power-supply pin(s) on the IC.

6.8.6 Power Management Unit (PMU)

over operating junction temperature range (unless otherwise noted)

GROUP	PARAMETER	MIN	TYP	MAX	UNIT
PMU	Power supply (VDDA33)	3.1	3.3	3.46	V
Bandgap	V_{REF} trimmed	0.886	0.9	0.914	V
1.8V LDO	DC accuracy	1.764	1.8	1.836	V
	Transient load regulation	1.71	1.8	1.89	V
	DC Load regulation			5	mV
	Load current	0		60	mA
	Power up time			800	uS
	Inrush current			150	mA
	External decoupling capacitance	–20%	4.7	20%	uF
ADC Reference	Load Regulation		±1		mV
ADC Reference	DC accuracy	1.764	1.8	1.836	V
	Power up time			800	uS
	Inrush current			80	mA
	External decoupling capacitance	–20%	4.7	20%	uF

Copyright © 2026 Texas Instruments Incorporated

6.8.7 Safety Comparators

PARAMETER			MIN	TYP	MAX	UNIT
C0	C0: 1.8-V Monitor Threshold		1.40	1.5	1.6	V
C1	BGAP Monitor	Lower Threshold	0.75	0.8	0.85	V
		Upper Threshold	0.935	1	1.065	V
C2	Monitors 1.8-V Supply vs BGAP	Lower Threshold	1.47	1.52	1.57	V
		Upper Threshold	2.13	2.195	2.26	V
C3	Monitors 1.2-V vs BGAP	Lower Threshold	0.98	1.011	1.041	V
		Upper Threshold	1.407	1.451	1.494	V
C4	Vref Monitor (ROK0)	Lower Threshold	1.56	1.61	1.66	V
		Upper Threshold	2.09	2.16	2.22	V
C5	Monitors IO Bias Supply vs BGAP	Lower Threshold	1.47	1.52	1.57	V
		Upper Threshold	2.13	2.195	2.26	V
C6	Vref Monitor (ROK0B)	Lower Threshold	1.56	1.61	1.66	V
		Upper Threshold	2.09	2.16	2.22	V
C7	System Supply Monitor (VSYS_MON)	Lower Threshold	0.873	0.9	0.927	V
C8	UnderVoltage Threshold		2.59	2.77	2.95	V
C9	Vref Monitor (ROK1)	Lower Threshold	1.56	1.61	1.66	V
		Upper Threshold	2.09	2.16	2.22	V

Copyright © 2026 Texas Instruments Incorporated

6.9 VPP Specifications for One-Time Programmable (OTP) eFuses

This section specifies the operating conditions required for programming the OTP eFuses.

6.9.1 VPP Specifications

over recommended operating conditions (unless otherwise noted)

PARAMETER	DESCRIPTION	TEST CONDITIONS	MIN	NOM	MAX	UNIT
VDD	Supply voltage range for the core domain during OTP operation	Normal Operation	1.140	1.200	1.260	V
VPP	Supply voltage range for the eFuse ROM domain	Normal Operation		No Connection		V
	Supply voltage range for the eFuse ROM domain during OTP programming	OTP Programming	1.65	1.7	1.75	V
$I_{(VPP)}$	VPP Current	$I_{(VPP)}$			100	mA
T_A	Ambient Temperature	Ambient Temperature	0	30	50	℃

6.9.2 Hardware Requirements

The following hardware requirements must be met when programming keys in the OTP eFuses:

- The VPP power supply must be disabled when not programming OTP registers.
- The VPP power supply must be ramped up after the proper device power-on sequence (for more details, see Section 6.11.2.1, *Power-On and Reset Sequencing*).

6.9.3 Programming Sequence

Programming sequence for OTP eFuses:

- Power on the board per the power-on sequencing. No voltage should be applied on the VPP terminal during power up and normal operation.
- Load the OTP write software required to program the eFuse (contact your local TI representative for the OTP software package).
- Apply the voltage on the VPP terminal according to the specification in Section 6.9.1, *VPP Specifications*.
- Run the software that programs the OTP registers.
- After validating the content of the OTP registers, remove the voltage from the VPP terminal.

6.9.4 Impact to Your Hardware Warranty

You accept that e-Fusing the TI Devices with security keys permanently alters them. You acknowledge that the e-Fuse can fail, for example, due to incorrect or aborted program sequence or if you omit a sequence step. Further the TI Device may fail to secure boot if the error code correction check fails for the Production Keys or if the image is not signed and optionally encrypted with the current active Production Keys. These types of situations will render the TI Device inoperable and TI will be unable to confirm whether the TI Devices conformed to their specifications prior to the attempted e-Fuse.

CONSEQUENTLY, TI WILL HAVE NO LIABILITY (WARRANTY OR OTHERWISE) FOR ANY TI DEVICES THAT HAVE BEEN e-FUSED WITH SECURITY KEYS.

Copyright © 2026 Texas Instruments Incorporated

6.10 Thermal Resistance Characteristics

This section provides the thermal resistance characteristics used on this device.

For reliability and operability concerns, the maximum junction temperature of the device has to be at or below the T_J value identified in Section 6.5, *Recommended Operating Conditions*.

6.10.1 Package Thermal Characteristics

It is recommended to perform thermal simulations at the system level with the worst-case device power consumption.

PARAMETER	DESCRIPTION	°C/W(1)(2)	AIR FLOW (m/s) (3)
$R\Theta_{JC}$	Junction-to-case	5.6	N/A
$R\Theta_{JB}$	Junction-to-board	5.7	N/A
$R\Theta_{JA}$	Junction-to-free air	18.6	0
$R\Theta_{JA}$	Junction-to-moving air	12.9	1
		11.8	2
		11.1	3
Ψ_{JT}	Junction-to-package top	0.1	0
		0.4	1
		0.5	2
		0.6	3
Ψ_{JB}	Junction-to-board	5.6	0
		5.7	1
		5.7	2
		5.6	3

(1) These values are based on a JEDEC defined 2S2P system (with the exception of the Theta JC [$R\Theta_{JC}$] value, which is based on a JEDEC defined 1S0P system) and will change based on environment as well as application. For more information, see these EIA/JEDEC standards:
- JESD51-2, Integrated Circuits Thermal Test Method Environment Conditions - Natural Convection (Still Air)
- JESD51-3, Low Effective Thermal Conductivity Test Board for Leaded Surface Mount Packages
- JESD51-6, Integrated Circuit Thermal Test Method Environmental Conditions - Forced Convection (Moving Air)
- JESD51-7, High Effective Thermal Conductivity Test Board for Leaded Surface Mount Packages
- JESD51-9, Test Boards for Area Array Surface Mount Packages

(2) °C/W = degrees Celsius per watt
(3) m/s = meters per second

6.11 Timing and Switching Characteristics

Note

The default SLEWRATE settings in each pad configuration register must be used to provide timings, unless specific instructions are given otherwise.

6.11.1 Timing Parameters and Information

The timing parameter symbols used in *Timing and Switching Characteristics* sections are created in accordance with JEDEC Standard 100. To shorten the symbols, some pin names and other related terminologies have been abbreviated in Table 6-1:

Table 6-1. Timing Parameters Subscripts

SYMBOL	PARAMETER
c	Cycle time (period)
d	Delay time
dis	Disable time
en	Enable time
h	Hold time
su	Setup time
START	Start bit
t	Transition time
v	Valid time
w	Pulse duration (width)
X	Unknown, changing, or don't care level
F	Fall time
H	High
L	Low
R	Rise time
V	Valid
IV	Invalid
AE	Active Edge
FE	First Edge
LE	Last Edge
Z	High impedance

Copyright © 2026 Texas Instruments Incorporated

6.11.2 Power Supply Sequencing

This section describes power supply sequencing required to provide proper device operation.

6.11.2.1 Power-On and Reset Sequencing

AM263x attempts to simplify the power reset requirements from previous Sitara MCU devices. There is no sequencing requirement with respect to the primary core digital VDD 1.2-V and I/O power 3.3-V rails. A pair of on-die LDO are supplied through the VDDS33 power net. These on-die LDO generate the required VDDS1V8 and VDDA1V8 1.8-V digital and analog power. The AM263x does require the minimum ramp time be respected for 3.3-V power-on. Additional PORz and SOP boot mode latch timing must be respected by the EVM design as well. Figure 6-1 describes the device power-on sequencing.

Table 6-2. AM263x Power-On Sequencing

PARAMETER		MIN	MAX	UNIT
$t_{Startup}$	Time for 1.2-V and 3.3-V DC-DC converters to startup after being enabled. This is an arbitrary amount of time - no constraint imposed by the device.	–	–	ms
t_{PGood}	Time for Power Good signals to be generated from DC-DC converters after rails are stable. This is an arbitrary amount of time - no constraint imposed by the device.	–	–	ms
t_{Ramp_3V3}	Ramp time of the VDDS3V3 and VDDA3V3 supplies. This is a requirement imposed by the device.	0.1	–	ms
$t_{SOP_Sampled}$	Time from PORz de-assertion until the SOP[3:0] pins are sampled. This is a device internal pentameter. Sampling happens when the internally generated supplies are stable. For information only. Refer to TSU_SOP and TH_SOP parameters for application usage.	0	–	ms
t_{SU_SOP}	Setup time for SOP relative to PORz assertion.	10	–	µs
t_{H_SOP}	Hold time for SOP relative to WARMRSTn deassertion.	0	–	µs
$t_{WARMRSTn}$	Time from PORz de-assertion until the device de-asserts the WARMRESETn signal.	2.0	–	ms

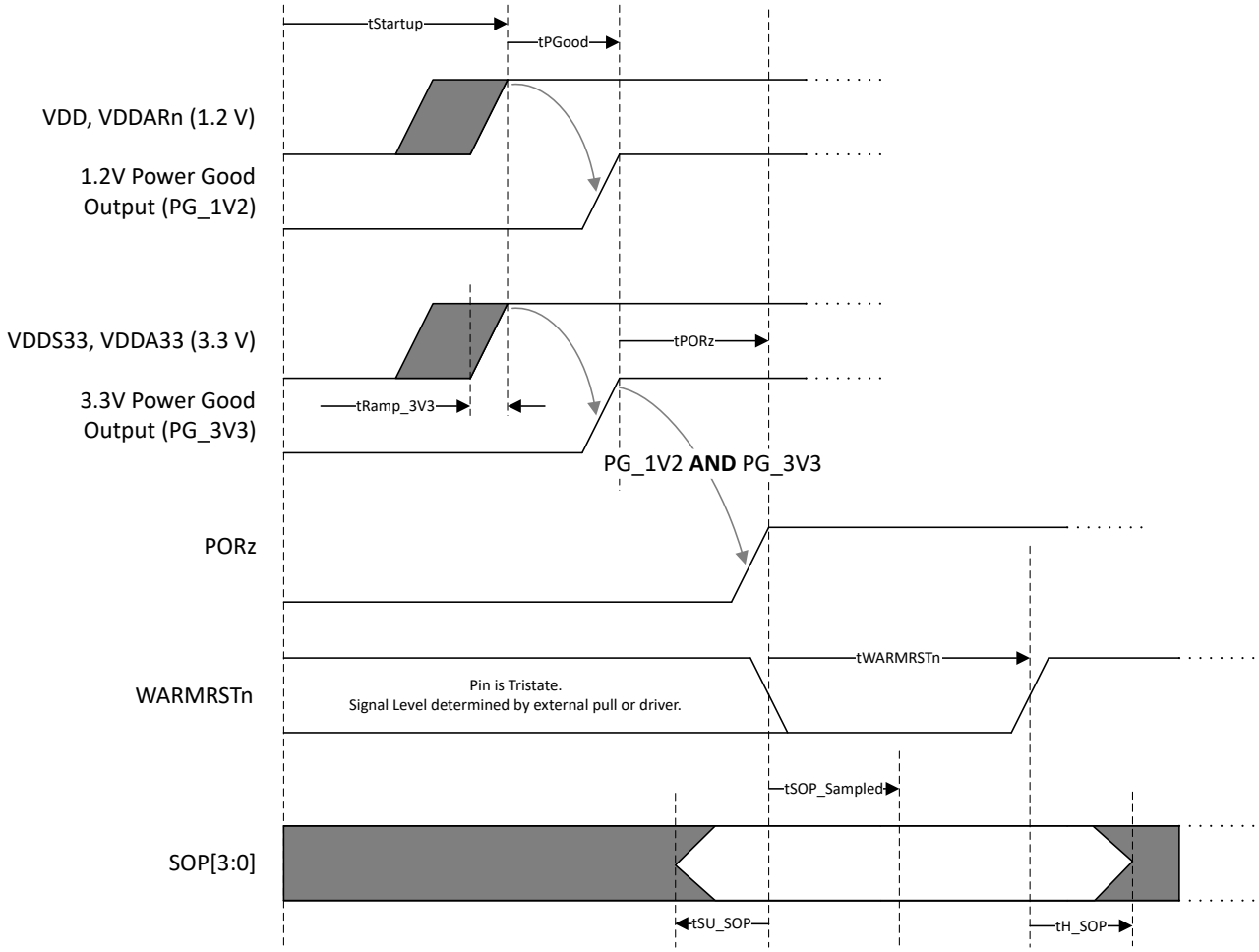

Figure 6-1. Power-On Sequencing

6.11.2.1.1 Power Reset Sequence Description

The following set of steps shall occur on the EVM and AM263x to boot the device from power-on reset.

1. PORz is held low by the external power supply monitor
2. VDD core digital 1.2V and VDDS3V3/VDDA3V3 3.3V supplies ramp to their nominal voltages
   a. This requires a logical AND be applied to the power good signal generated from each supply
3. SOP[3:0] pins held in their boot latch state
4. After PCB supplied power nets are stable, the external supply monitor will de-assert PORz
5. Device will startup 1.8V on-die LDO
6. After internal supply monitors show externally and internally generated supplies are stable, the SOP[3:0] pin states are latched
7. R5F cores are unhalted and SOP selected boot ROM execution begins

Copyright © 2026 Texas Instruments Incorporated

6.11.2.2 Power-Down Sequencing

Figure 6-2 describes the device power-down sequencing. The order of AM263x 1.2V and 3.3V does not matter.

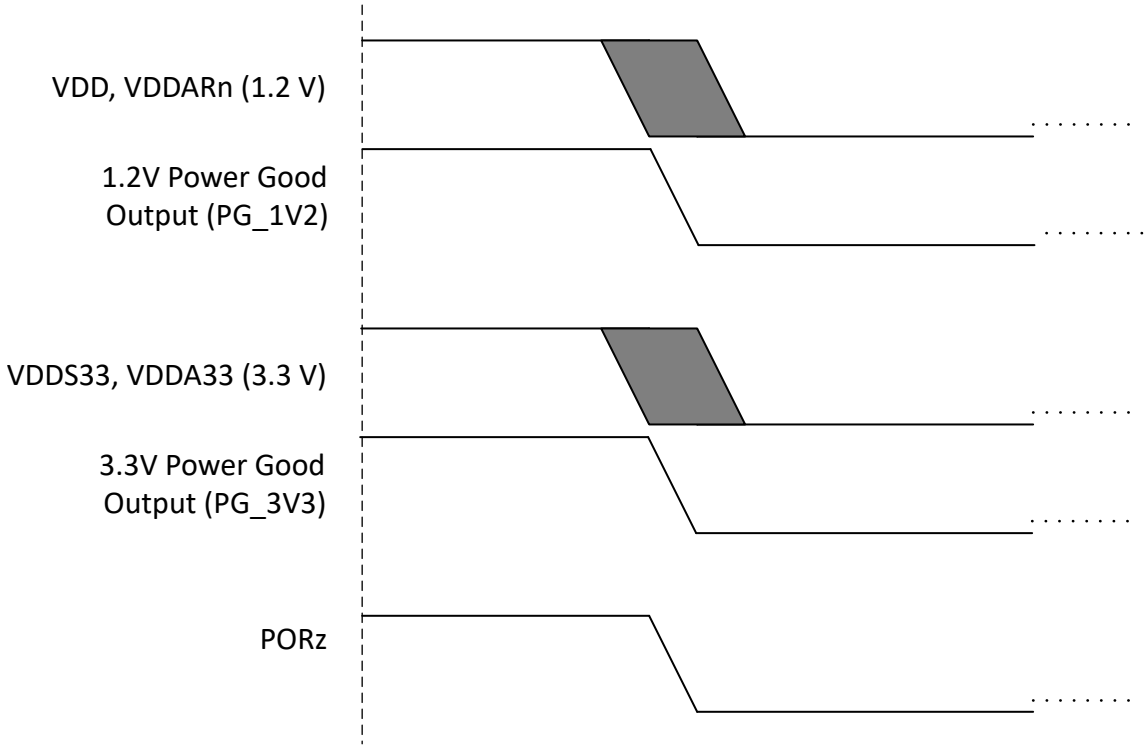

Figure 6-2. Power-Down Sequencing

6.11.3 System Timing

For more details about features and additional description information on the subsystem multiplexing signals, see the corresponding subsections within *Signal Descriptions* and *Detailed Description* sections.

6.11.3.1 System Timing Conditions

PARAMETER		MIN	MAX	UNIT
INPUT CONDITIONS				
SR_I	Input Slew Rate	0.5	2	V/ns
OUTPUT CONDITIONS				
C_L	Output Load Capacitance	3	30	pF

6.11.3.2 Reset Timing

Tables and figures provided in this section define timing requirements and switching characteristics for reset related signals.

6.11.3.2.1 PORz Timing Requirements

NO.	PARAMETER	DESCRIPTION	MIN	MAX	UNIT
RST1	$t_{h(SUPPLIES_VALID-PORz)}$	Hold time, PORz active (low) at Power-up after supplies valid (using external crystal)	0		ns
RST3	$t_{w(PORzL)}$	Pulse Width minimum, PORz low after Power-up (without removal of Power or system reference clock XTAL_XI/XO)	1000		ns

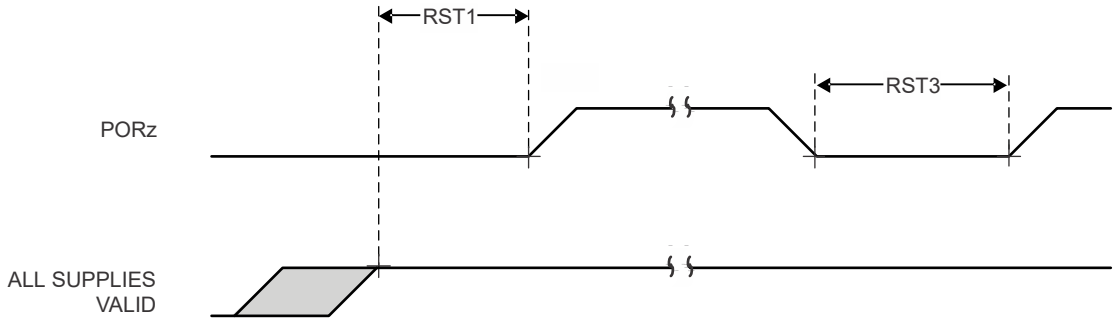

Figure 6-3. PORz Timing Requirements

6.11.3.2.2 WARMRSTn Switching Characteristics

NO.	PARAMETER	DESCRIPTION	MIN	MAX	UNIT
RST4	$t_{d(PORzL:-WARMRSTnZ)}$	Delay time, PORz active (low) to WARMRSTn high impedance	0	0	ns
RST5	$t_{d(PORzH-WARMRSTnL)}$	Delay time, PORz inactive (high) to WARMRSTn active (low)	0	0	ns
RST6	$t_{d(PORzH-WARMRSTnH)}$	Delay time, PORz inactive (high) to WARMRSTn inactive (high)	2000000	6000000	ns

Copyright © 2026 Texas Instruments Incorporated

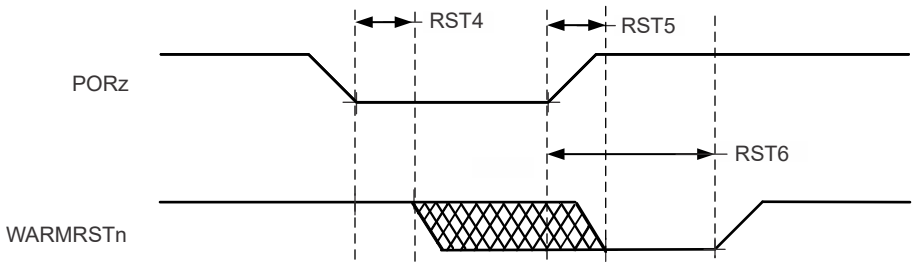

Figure 6-4. WARMRSTn Switching Characteristics

6.11.3.2.3 WARMRSTn Timing Requirements

NO.	PARAMETER	DESCRIPTION	MIN	MAX	UNIT
RST10	$t_{w(WARMRSTnL)}$[1]	Pulse Width minimum, WARMRSTn active (low)	500	16384000	ns

(1) This timing parameter is controlled by the TOP_RCM.WARM_RSTTIME1/2/3 registers. See the Reset section of the Technical Reference Manual for more details.

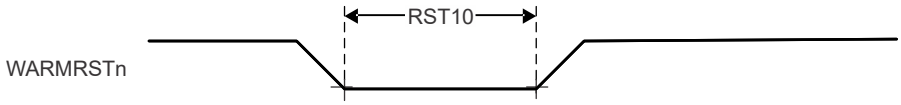

Figure 6-5. WARMRSTn Timing Requirements and Switching Characteristics

6.11.3.3 Safety Signal Timing

Tables and figures provided in this section define switching characteristics for SAFETY_ERRORn.

6.11.3.3.1 SAFETY_ERRORn Switching Characteristics

NO.	PARAMETER	DESCRIPTION	MIN	MAX	UNIT
SFTY1	$t_{c(SAFETY_ERRORn)}$	Cycle time minimum, SAFETY_ERRORn (PWM mode enabled)	(P[1] × H[3]) + (P[1] × L)[4]		ns
SFTY2	$t_{w(SAFETY_ERRORn)}$	Pulse width minimum, SAFETY_ERRORn active (PWM mode disabled)[5]	P[1] × R[2]		ns
SFTY3	$t_{d(ERROR_CONDITION\text{-}SAFETY_ERRORnL)}$	Delay time, ERROR_CONDITION to SAFETY_ERRORn active[5]	50 × P[1]		ns

(1) P = ESM functional clock
(2) R = Error Pin Counter Pre-Load Register count value
(3) H = Error Pin PWM High Pre-Load Register count value
(4) L = Error Pin PWM Low Pre-Load Register count value
(5) When PWM mode is enabled, SAFETY_ERRORn stops toggling after SFTY3 and will maintain its value (either high or low) until the error is cleared. When PWM mode is disabled, SAFETY_ERRORn is active low

Copyright © 2026 Texas Instruments Incorporated

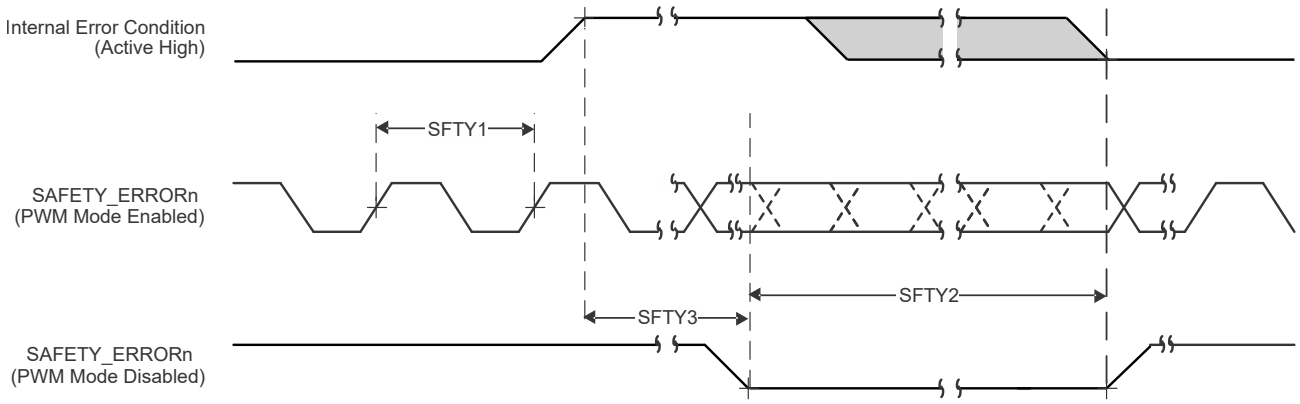

Figure 6-6. MCU_SAFETY_ERRORn Timing Requirements and Switching Characteristics

6.11.4 Clock Specifications

6.11.4.1 Input Clocks / Oscillators

6.11.4.1.1 OSC Internal Oscillator Clock Source

Figure 6-7 shows the recommended crystal circuit. All discrete components used to implement the oscillator circuit should be placed as close as possible to the MCU_OSC0_XI and MCU_OSC0_XO pins.

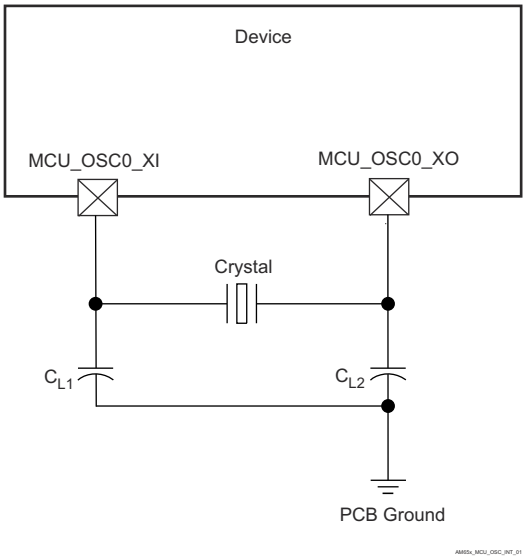

Figure 6-7. MCU_OSC0 Crystal Implementation

Note

When selecting a crystal, the system design must consider temperature and aging characteristics of the crystal based on worst case environment and expected life expectancy of the system.

6.11.4.1.2 Crystal Oscillator (XTAL) Parameters

PARAMETER		MIN	TYP	MAX	UNIT
F_{xtal}	Crystal Parallel Resonance Frequency (Fundamental mode oscillation only)	–50ppm	25	50ppm	MHz
Duty Cycle	Duty cycle output of XTAL	45	50	55	%
CC1	Capacitance of C_{L1} + C_{PCBXI}	12		24	pF
CC2	Capacitance of C_{L2} + C_{PCBXO}	12		24	pF

Copyright © 2026 Texas Instruments Incorporated

PARAMETER		MIN	TYP	MAX	UNIT
C_{shunt}	Crystal Circuit Shunt Capacitance			5	pF
ESR_{xtal}	Crystal Effective Series Resistance			46	Ω

6.11.4.1.3 External Clock Characteristics

over recommended operating conditions (unless otherwise noted)

PARAMETER		MIN	TYP	MAX	UNIT
C_{Pkg}	Shunt Capacitance of package		0.01		pF
P_{xtal}	Power dissipation		$0.5 \times ESR \times (2 \times \pi \times F_{xtal} \times C_L \times 1.8)^2$		W
t_s	Startup time		1.5		ms

6.11.4.1.4 MCU_OSC0 LVCMOS Digital Clock Source

Figure 6-8 shows the recommended oscillator connections when MCU_OSC0_XI is connected to a 1.8-V LVCMOS square-wave digital clock source.

Note

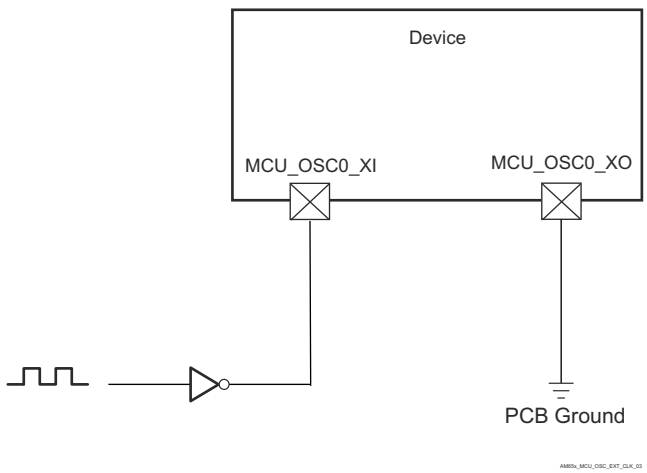

Figure 6-8. 1.8-V LVCMOS-Compatible Clock Input

6.11.4.2 Clock Timing

Tables and figures provided in this section define timing requirements and switching characteristics for clock signals.

6.11.4.2.1 Clock Timing Requirements

NO.	PARAMETER	DESCRIPTION	MIN	MAX	UNIT
CLK1	tc(EXT_REFCLK)	Cycle time minimum, EXT_REFCLK	10		ns
CLK2	tw(EXT_REFCLKH)	Pulse Duration minimum, EXT_REFCLK high	E(1) × 0.45	E(1) × 0.55	ns
CLK3	tw(EXT_REFCLKL)	Pulse Duration minimum, EXT_REFCLK low	E(1) × 0.45	E(1) × 0.55	ns

(1) E = EXT_REFCLK cycle time

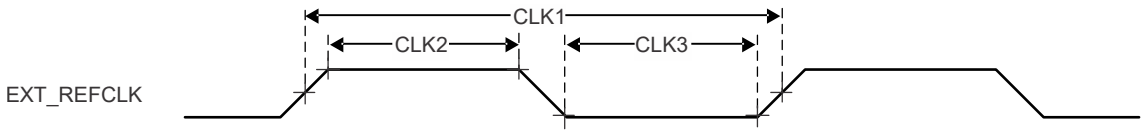

Figure 6-9. Clock Timing Requirements

6.11.4.2.2 Clock Switching Characteristics

NO.	PARAMETER	DESCRIPTION	MIN	MAX	UNIT
CLK4	$t_{c(CLKOUT0)}$	Cycle time minimum, CLKOUT0	10		ns
CLK5	$t_{w(CLKOUT0H)}$	Pulse Duration minimum, CLKOUT0 high	A[(1)] × 0.4	A[(1)] × 0.6	ns
CLK6	$t_{w(CLKOUT0L)}$	Pulse Duration minimum, CLKOUT0 low	A[(1)] × 0.4	A[(1)] × 0.6	ns
CLK7	$t_{c(CLKOUT1)}$	Cycle time minimum, CLKOUT1	10		ns
CLK8	$t_{w(CLKOUT1H)}$	Pulse Duration minimum, CLKOUT1 high	B[(2)] × 0.4	B[(2)] × 0.6	ns
CLK9	$t_{w(CLKOUT1L)}$	Pulse Duration minimum, CLKOUT1 low	B[(2)] × 0.4	B[(2)] × 0.6	ns

(1) A = CLKOUT0 cycle time
(2) B = CLKOUT1 cycle time

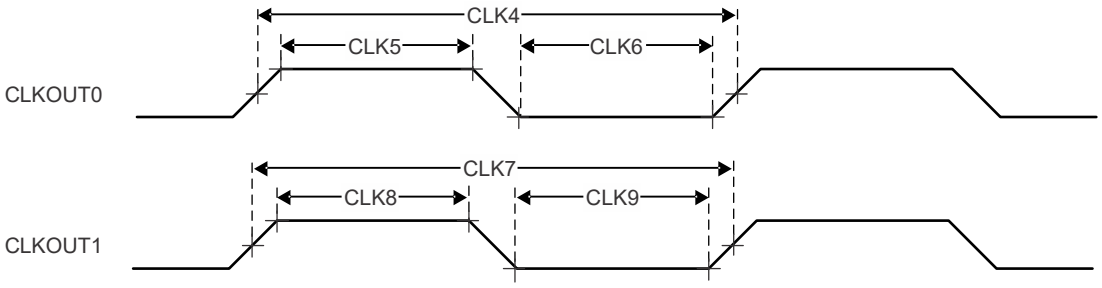

Figure 6-10. Clock Switching Characteristics

Copyright © 2026 Texas Instruments Incorporated

6.11.5 Peripherals

6.11.5.1 2-port Gigabit Ethernet MAC (CPSW)

Note

The CPSW supports two external Ethernet ports and one internal port.

For more details about features and additional description information on the device CPSW (2-port Gigabit Ethernet MAC), see the corresponding subsections within *Signal Descriptions* and *Detailed Description* sections.

6.11.5.1.1 CPSW MDIO Timing

6.11.5.1.1.1 CPSW MDIO Timing Conditions

PARAMETER		MIN	MAX	UNIT
INPUT CONDITIONS				
SR_I	Input Slew Rate	0.9	3.6	V/ns
OUTPUT CONDITIONS				
C_L	Output Load Capacitance	10	470	pF

6.11.5.1.1.2 CPSW MDIO Timing Requirements

NO.	PARAMETER	DESCRIPTION	MIN	MAX	UNIT
MDIO1	$t_{su(MDIO-MDC)}$	Setup time, MDIO_DATA valid before MDIO_CLK high	45		ns
MDIO2	$t_{h(MDC-MDIO)}$	Hold time, MDIO_DATA valid after MDIO_CLK high	0		ns

6.11.5.1.1.3 CPSW MDIO Switching Characteristics

NO.	PARAMETER	DESCRIPTION	MIN	MAX	UNIT
MDIO3	$t_{c(MDC)}$	Cycle time, MDIO_CLK	400		ns
MDIO4	$t_{w(MDCH)}$	Pulse duration, MDIO_CLK high	160		ns
MDIO5	$t_{w(MDCL)}$	Pulse duration, MDIO_CLK low	160		ns
MDIO7	$t_{d(MDC_MDIO)}$	Delay time, MDIO_CLK low to MDIO_DATA valid	–10	10	ns

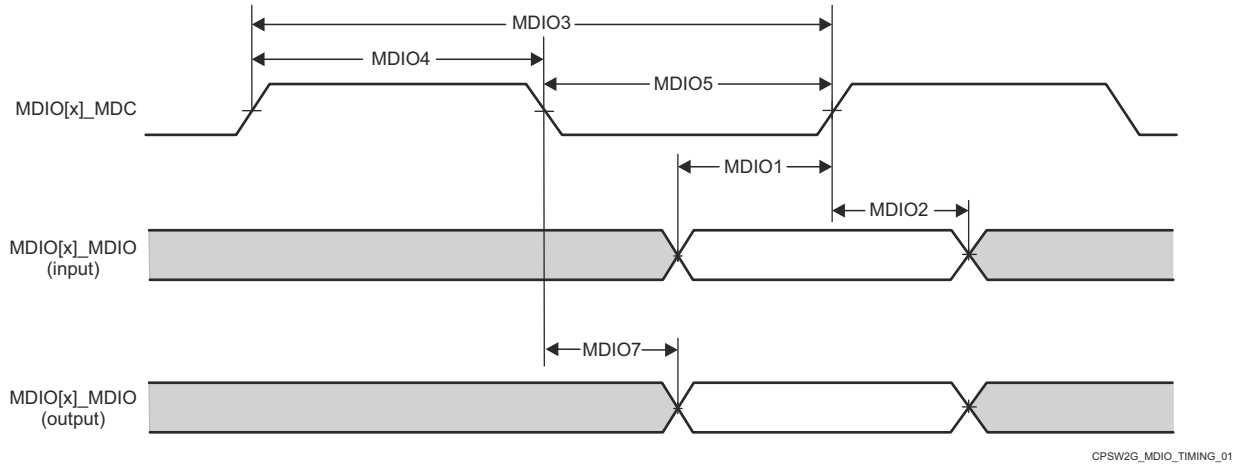

Figure 6-11. CPSW MDIO Timing Requirements and Switching Characteristics

6.11.5.1.2 CPSW RMII Timing

6.11.5.1.2.1 CPSW RMII Timing Conditions

PARAMETER			MIN	MAX	UNIT
INPUT CONDITIONS					
SR_I	Input Slew Rate	VDD = 3.3V	0.4	1.2	V/ns
OUTPUT CONDITIONS					
C_L	Output Load Capacitance		3	25	pF

6.11.5.1.2.2 CPSW RMII[x]_REFCLK Timing Requirements - RMII Mode

NO.	PARAMETER	DESCRIPTION	MIN	MAX	UNIT
RMII1	$t_{c(REF_CLK)}$	Cycle time, REF_CLK	19.999	20	ns
RMII2	$t_{w(REF_CLKH)}$	Pulse duration, REF_CLK High	7	13	ns
RMII3	$t_{w(REF_CLKL)}$	Pulse duration, REF_CLK Low	7	13	ns

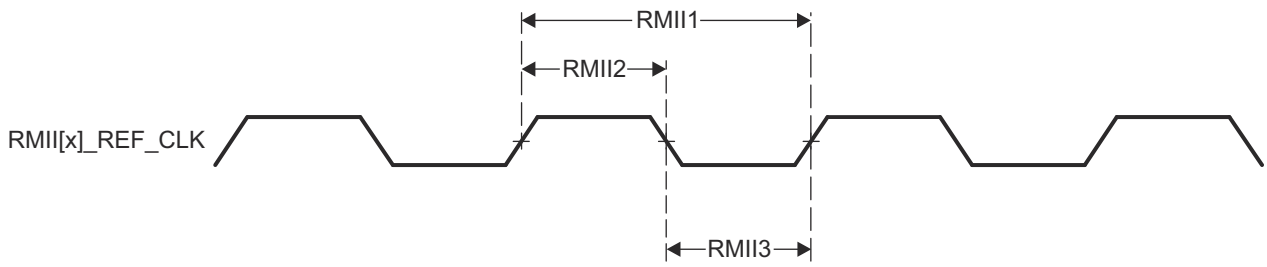

Figure 6-12. CPSW RMII[x]_REF_CLK Timing Requirements – RMII Mode

6.11.5.1.2.3 CPSW RMII[x]_RXD[1:0], RMII[x]_CRS_DV, and RMII[x]_RXER Timing Requirements - RMII Mode

NO.	PARAMETER	DESCRIPTION	MIN	MAX	UNIT
RMII4	$t_{su(RXD\text{-}REF_CLK)}$	Setup time, RXD[1:0] valid before REF_CLK	4		ns
	$t_{su(CRS_DV\text{-}REF_CLK)}$	Setup time, CRS_DV valid before REF_CLK	4		ns
	$t_{su(RX_ER\text{-}REF_CLK)}$	Setup time, RX_ER valid before REF_CLK	4		ns
RMII5	$t_{h(REF_CLK\text{-}RXD)}$	Hold time, RXD[1:0] valid after REF_CLK	2		ns
	$t_{h(REF_CLK\text{-}CRS_DV)}$	Hold time, CRS_DV valid after REF_CLK	2		ns
	$t_{h(REF_CLK\text{-}RX_ER)}$	Hold time, RX_ER valid after REF_CLK	2		ns

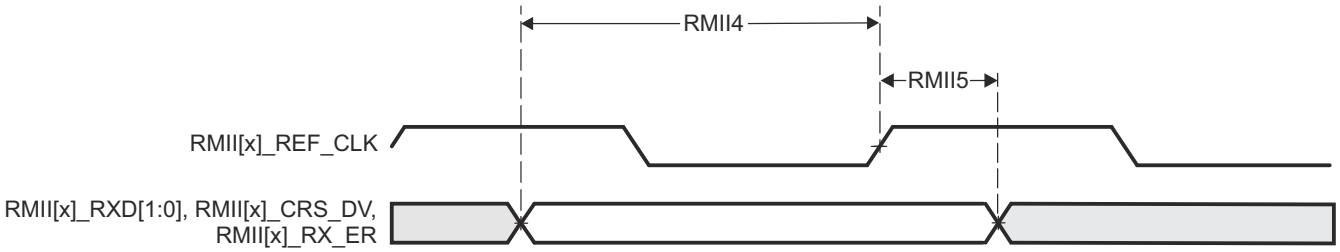

Figure 6-13. CPSW RMII[x]_RXD[1:0], RMII[x]_CRS_DV, RMII[x]_RX_ER Timing Requirements – RMII Mode

Copyright © 2026 Texas Instruments Incorporated

6.11.5.1.2.4 CPSW RMII[x]_TXD[1:0], and RMII[x]_TXEN Switching Characteristics - RMII Mode

NO.	PARAMETER	DESCRIPTION	MIN	MAX	UNIT
RMII6	$t_{d(REF_CLK-TXD)}$	Delay time, REF_CLK High to TXD[1:0] valid	2	10	ns
	$t_{d(REF_CLK-TXEN)}$	Delay time, REF_CLK to TXEN valid	2	10	ns

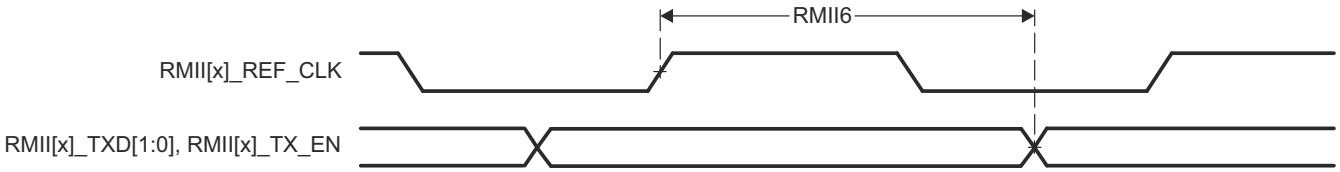

Figure 6-14. CPSW RMII[x]_TXD[1:0], and RMII[x]_TX_EN Switching Characteristics – RMII Mode

6.11.5.1.3 CPSW RGMII Timing

6.11.5.1.3.1 CPSW RGMII Timing Conditions

PARAMETER			MIN	MAX	UNIT
INPUT CONDITIONS					
SR_I	Input Slew Rate		2.64	5	V/ns
OUTPUT CONDITIONS					
C_L	Output Load Capacitance		2	20	pF
PCB Connectivity Requirements					
t_d (Trace Mismatch Delay)	Propagation Delay mismatch across all traces	RGMII[x]_RXC RGMII[x]_RD[3:0] RGMII[x]_RX_CTL		50	ps
		RGMII[x]_TXC RGMII[x]_TD[3:0] RGMII[x]_TX_CTL		50	ps

6.11.5.1.3.2 CPSW RGMII[x]_RCLK Timing Requirements - RGMII Mode

NO.	PARAMETER	DESCRIPTION	MODE	MIN	MAX	UNIT
RGMII1	$t_{c(RXC)}$	Cycle time, RXC	10Mbps	360	440	ns
			100Mbps	36	44	ns
			1000Mbps	7.2	8.8	ns
RGMII2	tw(RXCH)	Pulse duration, RXC high	10Mbps	160	240	ns
			100Mbps	16	24	ns
			1000Mbps	3.6	4.4	ns
RGMII3	tw(RXCL)	Pulse duration, RXC low	10Mbps	160	240	ns
			100Mbps	16	24	ns
			1000Mbps	3.6	4.4	ns

6.11.5.1.3.3 CPSW RGMII[x]_RD[3:0], and RGMII[x]_RCTL Timing Requirements

NO.	PARAMETER	DESCRIPTION	MODE	MIN	MAX	UNIT
RGMII4	$t_{su(RD-RXC)}$	Setup time, RD[3:0] valid before RXC high/low	10Mbps	1		ns
			100Mbps	1		ns
			1000Mbps	1		ns
	$t_{su(RX_CTL-RXC)}$	Setup time, RX_CTL valid before RXC high/low	10Mbps	1		ns
			100Mbps	1		ns
			1000Mbps	1		ns
RGMII5	$t_{h(RXC-RD)}$	Hold time, RD[3:0] valid after RXC high/low	10Mbps	1		ns
			100Mbps	1		ns
			1000Mbps	1		ns
	$t_{h(RXC-RX_CTL)}$	Hold time, RX_CTL valid after RXC high/low	10Mbps	1		ns
			100Mbps	1		ns
			1000Mbps	1		ns

Copyright © 2026 Texas Instruments Incorporated

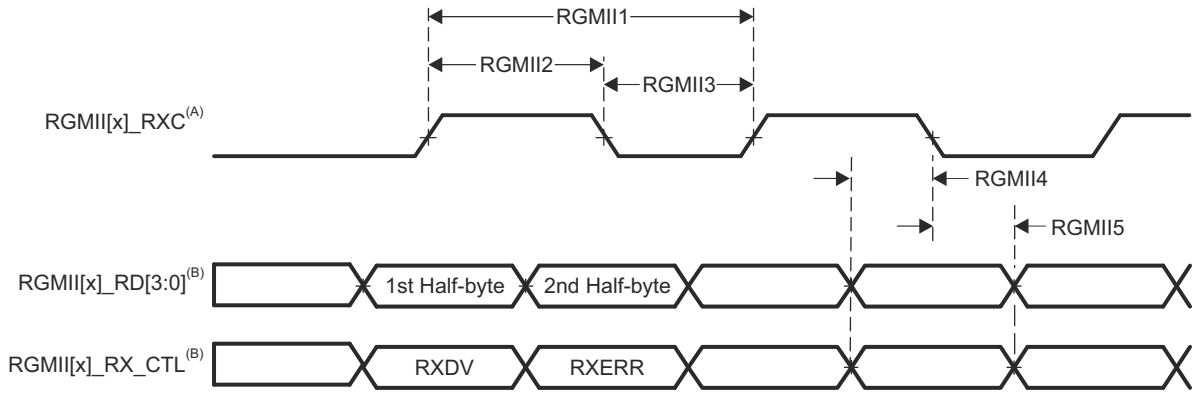

A. RGMII[x]_RXC must be externally delayed relative to the data and control pins.

B. Data and control information is received using both edges of the clocks. RGMII[x]_RD[3:0] carries data bits 3-0 on the rising edge of RGMII[x]_RXC and data bits 7-4 on the falling edge of RGMII[x]_RXC. Similarly, RGMII[x]_RX_CTL carries RXDV on rising edge of RGMII[x]_RXC and RXERR on falling edge of RGMII[x]_RXC.

Figure 6-15. CPSW RGMII[x]_RXC, RGMII[x]_RD[3:0], RGMII[x]_RX_CTL Timing Requirements - RGMII Mode

6.11.5.1.3.4 CPSW RGMII[x]_TCLK Switching Characteristics - RGMII Mode

NO.	PARAMETER	DESCRIPTION	MODE	MIN	MAX	UNIT
RGMII6	$t_{c(TXC)}$	Cycle time, TXC	10Mbps	360	440	ns
			100Mbps	36	44	ns
			1000Mbps	7.2	8.8	ns
RGMII7	$t_{w(TXCH)}$	Pulse duration, TXC high	10Mbps	160	240	ns
			100Mbps	16	24	ns
			1000Mbps	3.6	4.4	ns
RGMII8	$t_{w(TXCL)}$	Pulse duration, TXC low	10Mbps	160	240	ns
			100Mbps	16	24	ns
			1000Mbps	3.6	4.4	ns

6.11.5.1.3.5 CPSW RGMII[x]_TD[3:0], and RGMII[x]_TCTL Switching Characteristics - RGMII Mode

NO.	PARAMETER	DESCRIPTION	MODE	MIN	MAX	UNIT
RGMII9	$t_{osu(TD-TXC)}$	Output setup time, RGMII[x]_TD[3:0] valid to RGMII[x]_TXC high/low	10Mbps	1.2		ns
			100Mbps	1.2		ns
			1000Mbps	1.2		ns
	$t_{osu(TX_CTL-TXC)}$	Output setup time, RGMII[x]_TX_CTL valid to RGMII[x]_TXC high/low	10Mbps	1.2		ns
			100Mbps	1.2		ns
			1000Mbps	1.2		ns
RGMII10	$t_{oh(TXC-TD)}$	Output hold time, RGMII[x]_TD[3:0] valid after RGMII[x]_TXC high/low	10Mbps	1.2		ns
			100Mbps	1.2		ns
			1000Mbps	1.2		ns
	$t_{oh(TXC-TX_CTL)}$	Output hold time, RGMII[x]_TX_CTL valid after RGMII[x]_TXC high/low	10Mbps	1.2		ns
			100Mbps	1.2		ns
			1000Mbps	1.2		ns

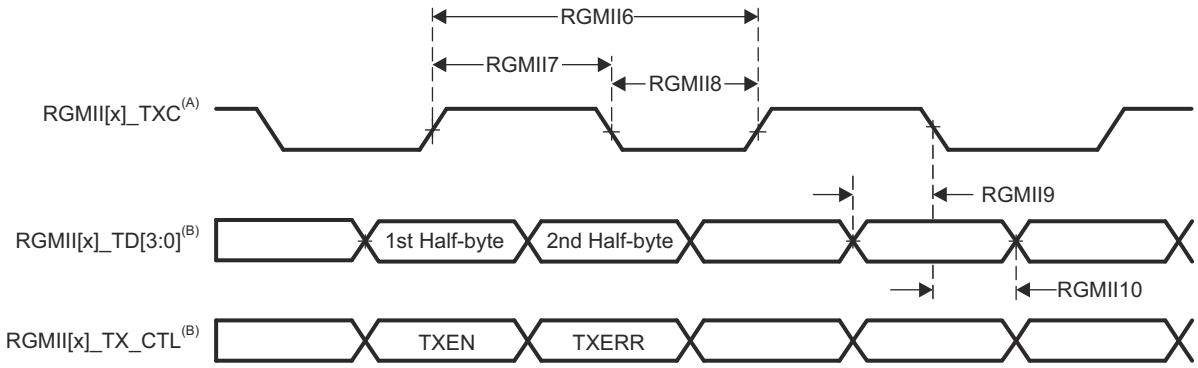

A. TXC is delayed internally before being driven to the RGMII[x]_TXC pin. This internal delay is by default enabled after POR.

B. Data and control information is received using both edges of the clocks. RGMII[x]_TD[3:0] carries data bits 3-0 on the rising edge of RGMII[x]_TXC and data bits 7-4 on the falling edge of RGMII[x]_TXC. Similarly, RGMII[x]_TX_CTL carries TXEN on rising edge of RGMII[x]_TXC and TXERR on falling edge of RGMII[x]_TXC.

Figure 6-16. CPSW RGMII[x]_TXC, RGMII[x]_TD[3:0], and RGMII[x]_TX_CTL Switching Characteristics - RGMII Mode

Copyright © 2026 Texas Instruments Incorporated

6.11.5.2 Enhanced Capture (eCAP)

Note

The device has multiple eCAP modules. The generic CAP_ prefix is used to represent the signal names for all eCAP instances.

For more information, see *Enhanced Capture (eCAP) Module* section in the device TRM.

6.11.5.2.1 ECAP Timing Conditions

PARAMETER		MIN	MAX	UNIT
INPUT CONDITIONS				
SR_I	Input Slew Rate	1	4	V/ns
OUTPUT CONDITIONS				
C_L	Output Load Capacitance	2	7	pF

6.11.5.2.2 ECAP Timing Requirements

NO.	PARAMETER	DESCRIPTION		MIN	MAX	UNIT
CAP1	$t_{w(CAP)}$	Capture input pulse width	Asynchronous	(2 + X[2]) × P[1]		ns
			Synchronous	(3 + X[2]) × P[1]		
			With input qualifier	(2 + X[2]) × P[1] + U[3]		

(1) P = sysclk period in ns.
(2) X = value of ECCTL0_TYPE3[QUALPRD] setting.
(3) U = the input qualifier sampling window. See GPIO Electrical Data and Timing section for details on Input Qualifier Mode

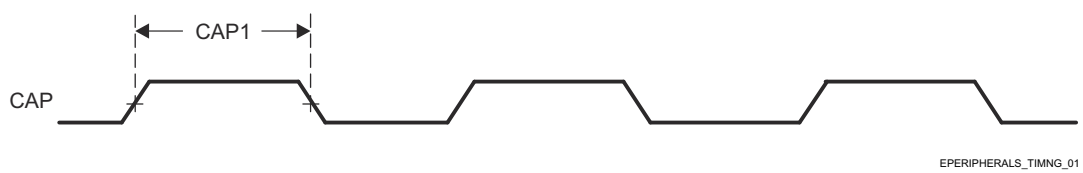

Figure 6-17. ECAP Timings Requirements

6.11.5.2.3 ECAP Switching Characteristics

NO.	PARAMETER	DESCRIPTION	MIN	MAX	UNIT
CAP2	$t_{w(APWM)}$	Pulse duration, APWMx output high/low	10		ns

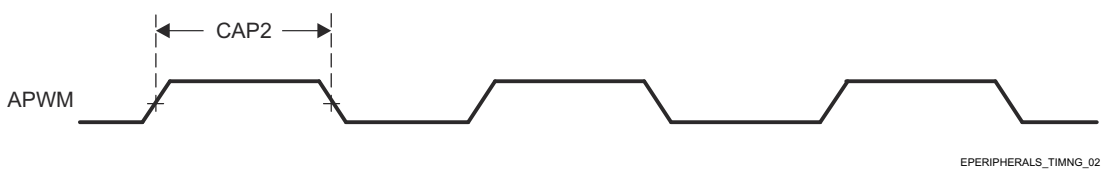

Figure 6-18. ECAP Switching Characteristics

6.11.5.3 Enhanced Pulse Width Modulation (ePWM)

Note

The device has multiple ePWM modules. The generic EHRPWM_ prefix is used to represent the signal names for all ePWM instances.

For more information, see *Enhanced Pulse Width Modulation (ePWM) Module* section in the device TRM.

6.11.5.3.1 EPWM Timing Conditions

PARAMETER		MIN	MAX	UNIT
INPUT CONDITIONS				
SR_I	Input Slew Rate	1	4	V/ns
OUTPUT CONDITIONS				
C_L	Output Load Capacitance	2	7	pF

6.11.5.3.2 EPWM Timing Requirements

NO.	PARAMETER	DESCRIPTION	MIN	MAX	UNIT
PWM6	$t_{w(SYNCIN)}$	Pulse duration, EHRPWM_SYNCI	2P(1)		ns
PWM7	$t_{w(TZ)}$	Pulse duration, EHRPWM_TZn_IN low	1P(1)		ns

(1) P = sysclk period in ns.

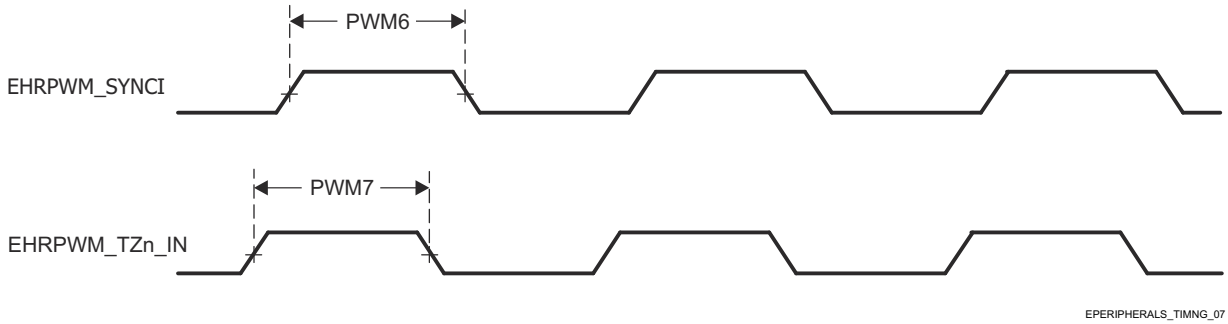

Figure 6-19. EPWM Timing Requirements

6.11.5.3.3 EPWM Switching Characteristics

NO.	PARAMETER	DESCRIPTION	MIN	MAX	UNIT
PWM1	$t_{w(PWM)}$	Pulse duration, EHRPWM_A/B high/low	20		ns
PWM2	$t_{w(SYNCOUT)}$	Pulse duration, EHRPWM_SYNCO	8P(1)		ns
PWM3	$t_{d(TZ-PWM)}$	Delay time, EHRPWM_TZn_IN active to EHRPWM_A/B forced high/low		30	ns
PWM4	$t_{d(TZ-PWMZ)}$	Delay time, EHRPWM_TZn_IN active to EHRPWM_A/B Hi-Z		30	ns
PWM5	$t_{w(SOC)}$	Pulse duration, EHRPWM_SOCA/B output	32P(1)		ns

(1) P = sysclk period in ns.

Copyright © 2026 Texas Instruments Incorporated

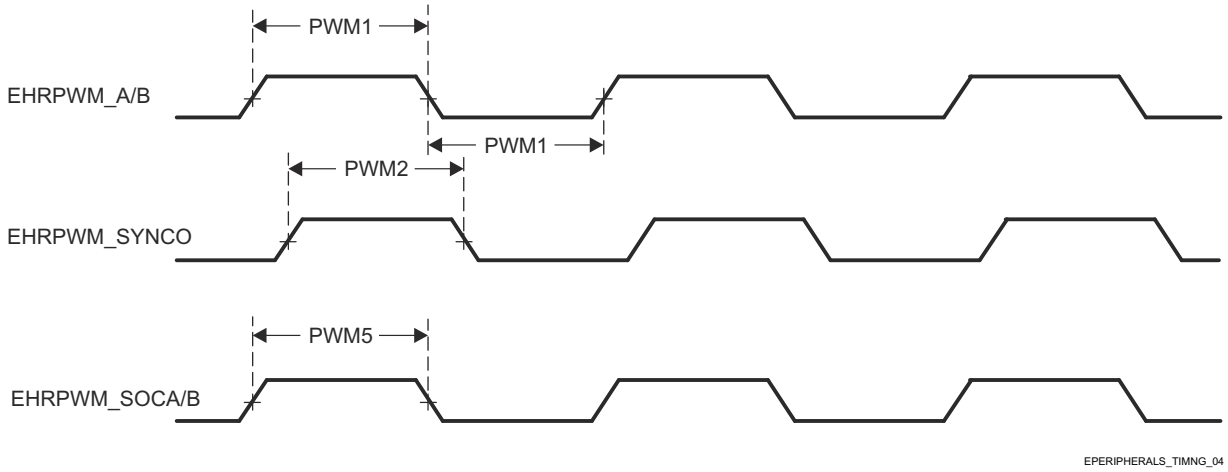

Figure 6-20. EHRPWM Switching Characteristics

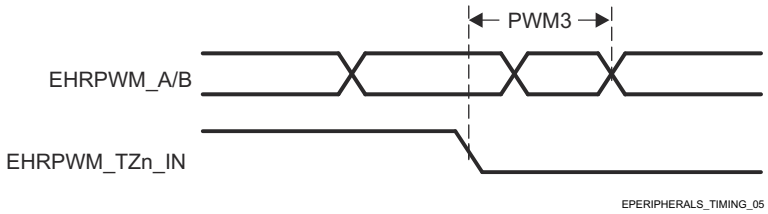

Figure 6-21. EHRPWM_TZn_IN to EHRPWM_A/B Forced Switching Characteristics

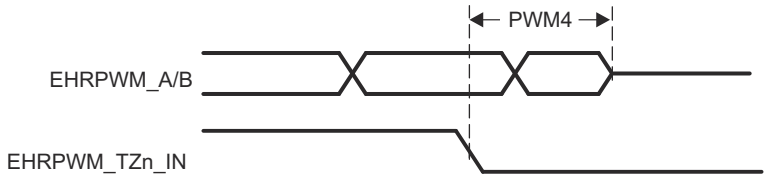

Figure 6-22. EHRPWM_TZn_IN to EHRPWM_A/B Hi-Z Switching Characteristics

EPWM Characteristics

PARAMETER	MIN	TYP	MAX	UNIT
Micro Edge Positioning (MEP) step size[(1)]		115	310	ps

(1) The MEP step size will be largest at high temperature and minimum voltage on VDD. MEP step size will increase with higher temperature and lower voltage and decrease with lower temperature and higher voltage.
Applications that use the HRPWM feature should use MEP Scale Factor Optimizer (SFO) estimation software functions. See the TI software libraries for details of using SFO functions in end applications. SFO functions help to estimate the number of MEP steps per SYSCLK period dynamically while the HRPWM is in operation.

6.11.5.4 Enhanced Quadrature Encoder Pulse (eQEP)

Note

The device has multiple eQEP modules. The generic QEP_ prefix is used to represent the signal names for all eQEP instances.

For more information, see *Enhanced Quadrature Encoder Pulse (eQEP) Module* section in the device TRM.

6.11.5.4.1 EQEP Timing Conditions

PARAMETER		MIN	MAX	UNIT
INPUT CONDITIONS				
SR_I	Input Slew Rate	1	4	V/ns
OUTPUT CONDITIONS				
C_L	Output Load Capacitance	2	7	pF

6.11.5.4.2 EQEP Timing Requirements

NO.	PARAMETER	DESCRIPTION		MIN	MAX	UNIT
QEP1	$t_{w(QEPP)}$	QEP input period	Synchronous(3)	3P(1)		ns
			With input qualifier	2 × (P(1) + U(2))		
QEP2	$t_{w(INDEXH)}$	QEP Index Input High time	Synchronous(3)	2 + 3P(1)		ns
			With input qualifier	2P(1) + U(2)		
QEP3	$t_{w(INDEXL)}$	QEP Index Input Low time	Synchronous(3)	3P(1)		ns
			With input qualifier	2P(1) + U(2)		
QEP4	$t_{w(STROBH)}$	QEP Strobe High time	Synchronous(3)	3P(1)		ns
			With input qualifier	2P(1) + U(2)		
QEP5	$t_{w(STROBL)}$	QEP Strobe Input Low time	Synchronous(3)	3P(1)		ns
			With input qualifier	2P(1) + U(2)		

(1) P = sysclk period in ns.
(2) U = the input qualifier sampling window. See GPIO Electrical Data and Timing section for details on Input Qualifier Mode.
(3) The GPIO GPxQSELn Asynchronous mode should not be used for eQEP module input pins.

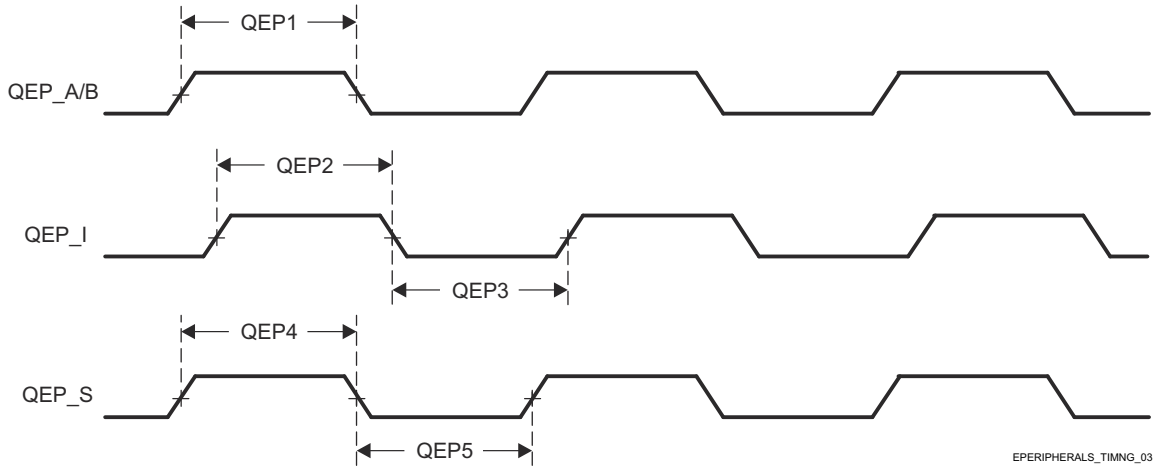

Figure 6-23. EQEP Timing Requirements

Copyright © 2026 Texas Instruments Incorporated

6.11.5.4.3 EQEP Switching Characteristics

NO.	PARAMETER	DESCRIPTION	MIN	MAX	UNIT
QEP6	$t_{d(CNTR)xin}$	Delay time, external clock to counter increment		4 + U[(2)] + 6P[(1)]	ns
QEP7	$t_{d(PCS\text{-}OUT)QEP}$	Delay time, QEP input edge to position compare sync output		4 + U[(2)] + 7P[(1)] + 4	ns

(1) P = sysclk period in ns.
(2) U = the input qualifier sampling window. See GPIO Electrical Data and Timing section for details on Input Qualifier Mode.

6.11.5.5 Fast Serial Interface (FSI)

Note

The device has multiple FSI modules. FSIn is a generic prefix applied to FSI signal names, where n represents the specific FSI module.

For more information, see *Fast Serial Interface* section in the device TRM.

6.11.5.5.1 FSI Timing Conditions

PARAMETER		MIN	MAX	UNIT
INPUT CONDITIONS				
SR_I	Input Slew Rate	0.8	4	V/ns
OUTPUT CONDITIONS				
C_L	Output Load Capacitance	1	7	pF

6.11.5.5.2 FSIRX Timing Requirements

NO.	PARAMETER	DESCRIPTION	MIN	MAX	UNIT
FSIR1	$t_{c(RX_CLK)}$	Cycle time, FSIRXn_CLK	16.67		ns
FSIR2	$t_{w(RX_CLK)}$	Pulse width, FSIRXn_CLK low or FSIRXn_CLK high	0.35P[(1)] – 1	0.65P[(1)] + 1	ns
FSIR3	$td_{(RX_D–RX_CLK)}$	Delay time, FSIRXn_D[0:1] valid before FSIRXn_CLK	1.7		ns
FSIR4	$t_{h(RX_CLK–RX_D)}$	Hold time with respect to both edges of FSIRXn_CLK	2		ns

(1) P = Tc(RXCLK) = RX Interface clock period in ns.

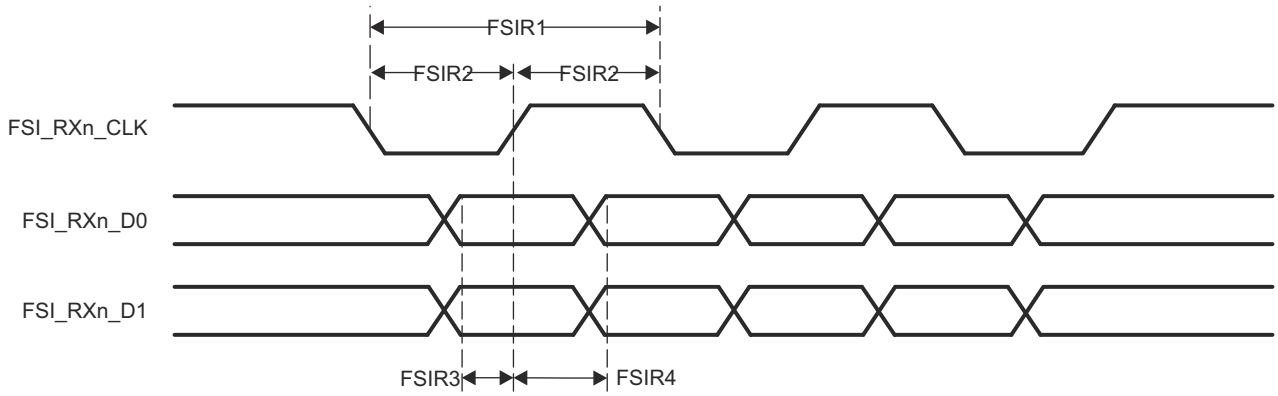

Figure 6-24. FSI Timing Requirements

Copyright © 2026 Texas Instruments Incorporated

6.11.5.5.3 FSIRX Switching Characteristics

NO.	PARAMETER	DESCRIPTION	MIN	MAX	UNIT
FSIR5	$t_{d(RX_CLK)}$	FSIRXn_CLK delay compensation at RX_DLYLINE_CTRL[RXCLK_DLY]=31	10	30	ns
FSIR6	$t_{d(RX_D0)}$	FSIRXn_D0 delay compensation at RX_DLYLINE_CTRL[RXCLK_DLY]=31	10	30	ns
FSIR7	$t_{d(RX_D1)}$	FSIRXn_D1 delay compensation at RX_DLYLINE_CTRL[RXCLK_DLY]=31	10	30	ns
FSIR8	$t_{d(DELAY_ELEMENT)}$	Incremental delay of each delay line element for FSIRXn_CLK, FSIRXn_D0, and FSIRXn_D1	0.3	1	ns
FSIR_TDM1	$t_{skew(RX_CLK-TX_TDM_D)}$	Delay skew between FSIRXn_TDM_CLK delay and FSIRXn_TDM_D[0:1]	–3	3	ns
FSIR_TDM2	$t_{skew(RX_CLK-TX_TDM_CLK)}$	Delay time, FSIRXn_CLK input to FSITXn_TDM_CLK output	2	12	ns
FSIR_TDM3	$t_{skew(RX_D0-TX_TDM_D0)}$	Delay time, FSIRXn_D0 input to FSITXn_TDM_D0 output	2	12	ns
FSIR_TDM4	$t_{skew(RX_D1-TX_TDM_D1)}$	Delay time, FSIRXn_D1 input to FSITXn_TDM_D1 output	2	12	ns

6.11.5.5.4 FSITX Switching Characteristics

NO.	PARAMETER	DESCRIPTION	MIN	MAX	UNIT
FSIT1	$t_{c(TX_CLK)}$	Cycle time, FSITXn_CLK	16.67		ns
FSIT2	$t_{w(TX_CLK)}$	Pulse width, FSITXn_CLK low or FSITXn_CLK high	0.5P(1) – 1	0.5P(1) + 1	ns
FSIT3	$td_{(TX_CLK-TX_D)}$	Delay time, FSITXn_Dx valid after FSITXn_CLK high or FSITXn_CLK low	0.25P(1) – 2	0.25P(1) + 2	ns
FSIT4	$t_{d(TXCLKL)}$	FSITXn_CLK delay compensation at TX_DLYLINE_CTRL[TXCLK_DLY]=31	9.95	30	ns
FSIT5	$t_{d(TX_D0)}$	FSITXn_D0 delay compensation at TX_DLYLINE_CTRL[TXCLK_DLY]=31	9.95	30	ns
FSIT6	$t_{d(TX_D1)}$	FSITXn_D1 delay compensation at TX_DLYLINE_CTRL[TXCLK_DLY]=31	9.95	30	ns
FSIT7	$t_{d(TX_DELAY_ELEMENT)}$	Incremental delay of each delay line element for FSITXn_CLK, FSITXn_D0, and FSITXn_D1	0.3	1	ns
FSIT_TDM1	$t_{skew(TX_TDM_CLK-TX_TDM_D)}$	Delay skew introduced between FSITXn_TDM_CLK delay and FSITXn_TDM_D[0:1] delays	–2.5	2.5	ns
FSIT_TDM2	$t_{skew(TX_TDM_CLK-TX_CLK)}$	Delay time, FSITXn_TDM_CLK input to FSITXn_CLK output	2	12	ns
FSIT_TDM3	$t_{skew(TX_TDM_D0-TX_D0)}$	Delay time, FSITXn_TDM_D0 input to FSITXn_D0 output	2	12	ns
FSIT_TDM4	$t_{skew(TX_TDM_D1-TX_D1)}$	Delay time, FSITXn_TDM_D1 input to FSITXn_D1 output	2	12	ns

(1) P = $t_{c(TX_CLK)}$ = FSITX Interface clock period in ns.

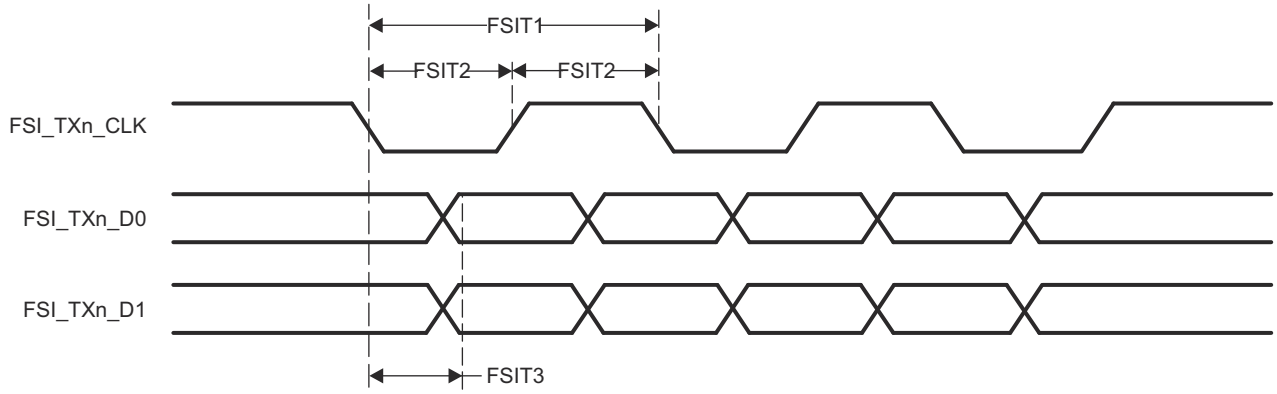

Figure 6-25. FSI Switching Characteristics - FSI Mode

6.11.5.5.5 FSITX SPI Signaling Mode Switching Characteristics

NO.	PARAMETER	DESCRIPTION	MIN	MAX	UNIT
FSIT4	$t_{c(TX_CLK)}$	Cycle time, FSITXn_CLK	16.67		ns
FSIT5	$t_{w(TX_CLK)}$	Pulse width, FSITXn_CLK low or FSITXn_CLK high	0.5P[(1)] – 1	0.5P[(1)] + 1	ns
FSIT6	$t_{d(TX_CLKH–TX_D0)}$	Delay time, FSITXn_CLK high to FSITXn_D0 valid		3	ns
FSIT7	$t_{d(TX_D1-TX_CLK)}$	Delay time, FSITXn_D1 low to FSITXn_CLK high	P[(1)] – 3		ns
FSIT8	$t_{d(TX_CLK-TX_D1)}$	Delay time, FSITXn_CLK low to FSITXn_D1 high	P[(1)]		ns

(1) P = $t_{c(TX_CLK)}$ = FSITX Interface clock period in ns.

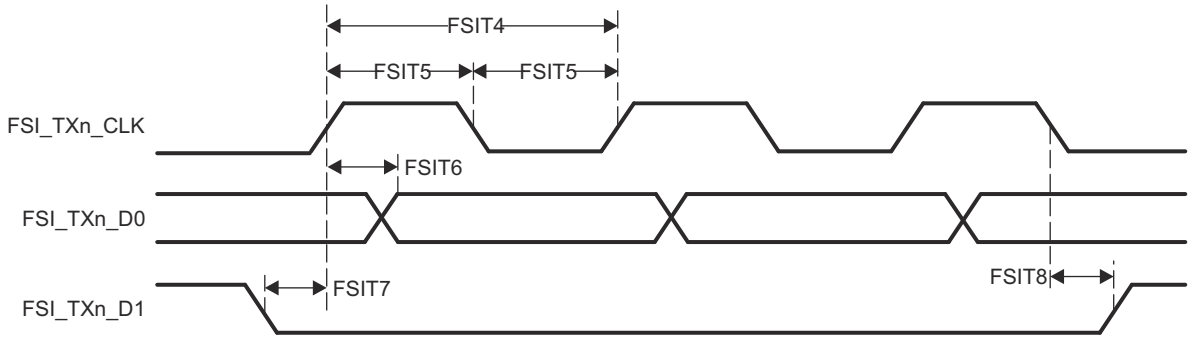

Figure 6-26. FSI Switching Characteristics - SPI Mode

Copyright © 2026 Texas Instruments Incorporated

6.11.5.6 General Purpose Input/Output (GPIO)

For more details about features and additional description information on the device GPIO, see the corresponding subsections within *Signal Descriptions* and *Detailed Description* sections.

For more information, see *General-Purpose Interface (GPIO)* section in the device TRM.

6.11.5.6.1 GPIO Timing Conditions

PARAMETER		BUFFER TYPE	MIN	MAX	UNIT
INPUT CONDITIONS					
SR_I	Input Slew Rate		0.75	6.6	V/ns
OUTPUT CONDITIONS					
C_L	Output Load Capacitance	LVCMOS	3	10	pF
		I2C OD FS[1]	3	10	pF

(1) A pull-up resistor is required for buffer type *I2C OD FS*.

6.11.5.6.2 GPIO Timing Requirements

NO.	PARAMETER	DESCRIPTION	BUFFER TYPE	MIN	MAX	UNIT
D3	$t_{w(GPIO_IN)}$	Minimum Input Pulse Width	LVCMOS	2P[1] + 2		ns
D4			I2C OD FS[2]	2P[1] + 2		ns

(1) P = functional clock period in ns.
(2) A pull-up resistor is required for buffer type *I2C OD FS*.

6.11.5.6.3 GPIO Switching Characteristics

NO.	PARAMETER	DESCRIPTION	BUFFER TYPE	MIN	MAX	UNIT
D1	$t_{w(GPIO_OUT)}$	Minimum Output Pulse Width	LVCMOS	0.975P[1] – 2		ns
D2	$t_{w(GPIO_OUT)}$	Minimum Output Pulse Width Low	I2C OD FS[2]	2P[1] + 160		ns
D3	$t_{w(GPIO_OUT)}$	Minimum Output Pulse Width High	I2C OD FS[2]	2P[1] + 160		ns

(1) P = functional clock period in ns.
(2) A pull-up resistor is required for buffer type *I2C OD FS*.

6.11.5.7 General Purpose Memory Controller (GPMC)

For more details about features and additional description information on the device General-Purpose Memory Controller, see the corresponding subsections within *Signal Descriptions* and *Detailed Description* sections.

For more information, see the *General-Purpose Memory Controller (GPMC)* section in the device TRM.

6.11.5.7.1 GPMC Timing Conditions

PARAMETER			MIN	MAX	UNIT
INPUT CONDITIONS					
SR_I	Input Slew Rate		1.65	4	V/ns
OUTPUT CONDITIONS					
C_L	Output Load Capacitance		3	20	pF
PCB CONNECTIVITY REQUIREMENTS					
$t_{d(Trace\ Delay)}$	Propagation delay of each trace	100MHz	140	720	ps
$t_{d(Trace\ Mismatch\ Delay)}$	Propagation delay mismatch across all traces			200	ps

6.11.5.7.2 GPMC/NOR Flash Timing Requirements - Synchronous Mode 100MHz
(1)(2)

NO.	PARAMETER	DESCRIPTION	MODE	MIN	MAX	UNIT
F12	$t_{su(dV-clkH)}$	Setup time, GPMC0_AD[31:0] valid before GPMC0_CLK high	div_by_1_mode (4)	1.81		ns
			not_div_by_1_mode(5)	1.06		ns
F13	$t_{h(clkH-dV)}$	Hold time, GPMC0_AD[31:0] valid after GPMC0_CLK high	div_by_1_mode (4)	2.29		ns
			not_div_by_1_mode(5)	2.29		ns
F21	$t_{su(waitV-clkH)}$	Setup time, GPMC0_WAIT[x](3) valid before GPMC0_CLK high	div_by_1_mode (4)	1.81		ns
			not_div_by_1_mode(5)	1.06		ns
F22	$t_{h(clkH-waitV)}$	Hold time, GPMC0_WAIT[x](3) valid after GPMC0_CLK high	div_by_1_mode (4)	2.29		ns
			not_div_by_1_mode(5)	2.29		ns

(1) 100MHz GPMC_FCLK selected - CTRLMMR_GPMC_CLKSEL[0] CLK_SEL = 1 = MAIN_PLL2_HSDIV7_CLKOUT (100/60 MHz).
(2) Trace length from GPMC pins to device assumed to be less than 4" and length matched to within 200ps for 100MHz Synchronous Mode.
(3) In GPMC_WAIT[x], x is equal to 0 or 1.
(4) In div_by_1_mode, GPMC0_CLK refers to either GPMC0_CLKOUT or GPMC0_FCLK_MUX (free-running). Both signals are pin-muxed to the same pin.
GPMC_CONFIG1_i Register: GPMCFCLKDIVIDER = 0h:
– GPMC0_CLK frequency = GPMC_FCLK frequency
(5) In not_div_by_1_mode, GPMC_CLK only refers to GPMC0_CLKOUT. GPMC0_FCLK_MUX cannot be clock divided to match the GPMC0_CLKOUT frequency if GPMCFCLKDIVIDER > 0.
GPMC_CONFIG1_i Register: GPMCFCLKDIVIDER = 1h to 3h:
– GPMC_CLK frequency = GPMC_FCLK frequency / (2 to 4)

Copyright © 2026 Texas Instruments Incorporated

6.11.5.7.3 GPMC/NOR Flash Switching Characteristics - Synchronous Mode 100MHz
(18)(19)(20)

NO.	PARAMETER	DESCRIPTION	MODE	MIN	MAX	UNIT
F0	$t_{c(clk)}$	Clock period, GPMC0_CLK, GPMC0_FCLK_MUX		10(21)		ns
F1	$t_{w(clk)}$	Typical pulse duration, GPMC0_CLK high or low		0.475P(16) – 0.3(21)		ns
F2	$t_{d(clkH-csnV)}$	Delay time, GPMC0_CLK rising edge to GPMC0_CSn[x](15) transition		F(6) – 2.2(21)	F(6)+3.75	ns
F3	$t_{d(clkH-csnIV)}$	Delay time, GPMC0_CLK rising edge to GPMC0_CSn[x](15) invalid		E(5) – 2.2	E(5)+3.18	ns
F4	$t_{d(aV-clk)}$	Delay time, GPMC0_A[27:1] valid to GPMC0_CLK first edge		B(2) – 2.3(21)	B(2) + 4.5	ns
F5	$t_{d(clkH-aIV)}$	Delay time, GPMC0_CLK rising edge to GPMC0_A[27:1] invalid		–2.3(21)	4.5	ns
F6	$t_{d(be[x]nV-clk)}$	Delay time, GPMC0_BE0n_CLE, GPMC0_BE1n valid to GPMC0_CLK first edge		B(2) – 2.3(21)	B(2) + 1.9	ns
F7	$t_{d(clkH-be[x]nIV)}$	Delay time, GPMC0_CLK rising edge to GPMC0_BE0n_CLE, GPMC0_BE1n invalid(12)		D(4) – 2.3(21)	D(4) + 1.9	ns
F7	$t_{d(clkL-be[x]nIV)}$	Delay time, GPMC0_CLK falling edge to GPMC0_BE0n_CLE, GPMC0_BE1n invalid(13)		D(4) – 2.3(21)	D(4) + 1.9	ns
F7	$t_{d(clkL-be[x]nIV)}$	Delay time, GPMC0_CLK falling edge to GPMC0_BE0n_CLE, GPMC0_BE1n invalid(14)		D(4) – 2.3(21)	D(4) + 1.9	ns
F8	$t_{d(clkH-advn)}$	Delay time, GPMC0_CLK rising edge to GPMC0_ADVn_ALE transition		G(7)(8) – 2.3(21)	G(7)(8) + 4.5	ns
F9	$t_{d(clkH-advnIV)}$	Delay time, GPMC0_CLK rising edge to GPMC0_ADVn_ALE invalid		D(4) – 2.3(21)	D(4) + 4.5	ns
F10	$t_{d(clkH-oen)}$	Delay time, GPMC0_CLK rising edge to GPMC0_OEn_REn transition		H(9) – 2.3(21)	H(9) + 3.5	ns
F11	$t_{d(clkH-oenIV)}$	Delay time, GPMC0_CLK rising edge to GPMC0_OEn_REn invalid		H(9) – 2.3(21)	H(9) + 3.5	ns
F14	$t_{d(clkH-wen)}$	Delay time, GPMC0_CLK rising edge to GPMC0_WEn transition		I(10) – 2.3(21)	I(10) + 4.5	ns
F15	$t_{d(clkH-do)}$	Delay time, GPMC0_CLK rising edge to GPMC0_AD[31:0] transition(12)		J(11) – 2.3(21)	J(11) + 2.7	ns
F15	$t_{d(clkL-do)}$	Delay time, GPMC0_CLK falling edge to GPMC0_AD[31:0] data bus transition(13)		J(11) – 2.3(21)	J(11) + 2.7	ns
F15	$t_{d(clkL-do)}$	Delay time, GPMC0_CLK falling edge to GPMC0_AD[31:0] data bus transition(14)		J(11) – 2.3(21)	J(11) + 2.7	ns
F17	$t_{d(clkH-be[x]n)}$	Delay time, GPMC0_CLK rising edge to GPMC0_BE0n_CLE transition(12)		J(11) – 2.3(21)	J(11) + 1.9	ns
F17	$t_{d(clkL-be[x]n)}$	Delay time, GPMC0_CLK falling edge to GPMC0_BE0n_CLE, GPMC0_BE1n transition(13)		J(11) – 2.3(21)	J(11) + 1.9	ns
F17	$t_{d(clkL-be[x]n)}$	Delay time, GPMC0_CLK falling edge to GPMC0_BE0n_CLE, GPMC0_BE1n transition(14)		J(11) – 2.3(21)	J(11) + 1.9	ns
F18	$t_{w(csnV)}$	Pulse duration, GPMC0_CSn[x](15) low	Read	A(1)		ns
			Write	A(1)		ns
F19	$t_{w(be[x]nV)}$	Pulse duration, GPMC0_BE0n_CLE, GPMC0_BE1n low	Read	C(3)		ns
			Write	C(3)		ns

(18)(19)(20)

NO.	PARAMETER	DESCRIPTION	MODE	MIN	MAX	UNIT
F20	$t_{w(advnV)}$	Pulse duration, GPMC0_ADVn_ALE low	Read	K(17)		ns
			Write	K(17)		ns

(1) For single read: A = (CSRdOffTime - CSOnTime) × (TimeParaGranularity + 1) × GPMC_FCLK(17)
For burst read: A = (CSRdOffTime - CSOnTime + (n - 1) × PageBurstAccessTime) × (TimeParaGranularity + 1) × GPMC_FCLK(17)
For burst write: A = (CSWrOffTime - CSOnTime + (n - 1) × PageBurstAccessTime) × (TimeParaGranularity + 1) × GPMC_FCLK(17)
With n being the page burst access number.

(2) B = ClkActivationTime × GPMC_FCLK(17)

(3) For single read: C = RdCycleTime × (TimeParaGranularity + 1) × GPMC_FCLK(17)
For burst read: C = (RdCycleTime + (n - 1) × PageBurstAccessTime) × (TimeParaGranularity + 1) × GPMC_FCLK(17)
For burst write: C = (WrCycleTime + (n - 1) × PageBurstAccessTime) × (TimeParaGranularity + 1) × GPMC_FCLK(17)
With n being the page burst access number.

(4) For single read: D = (RdCycleTime - AccessTime) × (TimeParaGranularity + 1) × GPMC_FCLK(17)
For burst read: D = (RdCycleTime - AccessTime) × (TimeParaGranularity + 1) × GPMC_FCLK(17)
For burst write: D = (WrCycleTime - AccessTime) × (TimeParaGranularity + 1) × GPMC_FCLK(17)

(5) For single read: E = (CSRdOffTime - AccessTime) × (TimeParaGranularity + 1) × GPMC_FCLK(17)
For burst read: E = (CSRdOffTime - AccessTime) × (TimeParaGranularity + 1) × GPMC_FCLK(17)
For burst write: E = (CSWrOffTime - AccessTime) × (TimeParaGranularity + 1) × GPMC_FCLK(17)

(6) For csn falling edge (CS activated):
– Case GpmcFCLKDivider = 0:
– F = 0.5 × CSExtraDelay × GPMC_FCLK(17)
– Case GpmcFCLKDivider = 1:
– F = 0.5 × CSExtraDelay × GPMC_FCLK(17) if (ClkActivationTime and CSOnTime are odd) or (ClkActivationTime and CSOnTime are even)
– F = (1 + 0.5 × CSExtraDelay) × GPMC_FCLK(17) otherwise
– Case GpmcFCLKDivider = 2:
– F = 0.5 × CSExtraDelay × GPMC_FCLK(17) if ((CSOnTime - ClkActivationTime) is a multiple of 3)
– F = (1 + 0.5 × CSExtraDelay) × GPMC_FCLK(17) if ((CSOnTime - ClkActivationTime - 1) is a multiple of 3)
– F = (2 + 0.5 × CSExtraDelay) × GPMC_FCLK(17) if ((CSOnTime - ClkActivationTime - 2) is a multiple of 3)

(7) For ADV falling edge (ADV activated):
– Case GpmcFCLKDivider = 0:
– G = 0.5 × ADVExtraDelay × GPMC_FCLK(17)
– Case GpmcFCLKDivider = 1:
– G = 0.5 × ADVExtraDelay × GPMC_FCLK(17) if (ClkActivationTime and ADVOnTime are odd) or (ClkActivationTime and ADVOnTime are even)
– G = (1 + 0.5 × ADVExtraDelay) × GPMC_FCLK(17) otherwise
– Case GpmcFCLKDivider = 2:
– G = 0.5 × ADVExtraDelay × GPMC_FCLK(17) if ((ADVOnTime - ClkActivationTime) is a multiple of 3)
– G = (1 + 0.5 × ADVExtraDelay) × GPMC_FCLK(17) if ((ADVOnTime - ClkActivationTime - 1) is a multiple of 3)
– G = (2 + 0.5 × ADVExtraDelay) × GPMC_FCLK(17) if ((ADVOnTime - ClkActivationTime - 2) is a multiple of 3)
For ADV rising edge (ADV deactivated) in Reading mode:
– Case GpmcFCLKDivider = 0:
– G = 0.5 × ADVExtraDelay × GPMC_FCLK(17)
– Case GpmcFCLKDivider = 1:
– G = 0.5 × ADVExtraDelay × GPMC_FCLK(17) if (ClkActivationTime and ADVRdOffTime are odd) or (ClkActivationTime and ADVRdOffTime are even)
– G = (1 + 0.5 × ADVExtraDelay) × GPMC_FCLK(17) otherwise
– Case GpmcFCLKDivider = 2:
– G = 0.5 × ADVExtraDelay × GPMC_FCLK(17) if ((ADVRdOffTime - ClkActivationTime) is a multiple of 3)
– G = (1 + 0.5 × ADVExtraDelay) × GPMC_FCLK(17) if ((ADVRdOffTime - ClkActivationTime - 1) is a multiple of 3)
– G = (2 + 0.5 × ADVExtraDelay) × GPMC_FCLK(17) if ((ADVRdOffTime - ClkActivationTime - 2) is a multiple of 3)

(8) For ADV rising edge (ADV deactivated) in Writing mode:
– Case GpmcFCLKDivider = 0:
– G = 0.5 × ADVExtraDelay × GPMC_FCLK(17)
– Case GpmcFCLKDivider = 1:
– G = 0.5 × ADVExtraDelay × GPMC_FCLK(17) if (ClkActivationTime and ADVWrOffTime are odd) or (ClkActivationTime and ADVWrOffTime are even)
– G = (1 + 0.5 × ADVExtraDelay) × GPMC_FCLK(17) otherwise
– Case GpmcFCLKDivider = 2:
– G = 0.5 × ADVExtraDelay × GPMC_FCLK(17) if ((ADVWrOffTime - ClkActivationTime) is a multiple of 3)
– G = (1 + 0.5 × ADVExtraDelay) × GPMC_FCLK(17) if ((ADVWrOffTime - ClkActivationTime - 1) is a multiple of 3)
– G = (2 + 0.5 × ADVExtraDelay) × GPMC_FCLK(17) if ((ADVWrOffTime - ClkActivationTime - 2) is a multiple of 3)

(9) For OE falling edge (OE activated) and IO DIR rising edge (Data Bus input direction):
– Case GpmcFCLKDivider = 0:
– H = 0.5 × OEExtraDelay × GPMC_FCLK(17)

Copyright © 2026 Texas Instruments Incorporated

– Case GpmcFCLKDivider = 1:
– H = 0.5 × OEExtraDelay × GPMC_FCLK(17) if (ClkActivationTime and OEOnTime are odd) or (ClkActivationTime and OEOnTime are even)
– H = (1 + 0.5 × OEExtraDelay) × GPMC_FCLK(17) otherwise
– Case GpmcFCLKDivider = 2:
– H = 0.5 × OEExtraDelay × GPMC_FCLK(17) if ((OEOnTime - ClkActivationTime) is a multiple of 3)
– H = (1 + 0.5 × OEExtraDelay) × GPMC_FCLK(17) if ((OEOnTime - ClkActivationTime - 1) is a multiple of 3)
– H = (2 + 0.5 × OEExtraDelay) × GPMC_FCLK(17) if ((OEOnTime - ClkActivationTime - 2) is a multiple of 3)
For OE rising edge (OE deactivated):
– Case GpmcFCLKDivider = 0:
– H = 0.5 × OEExtraDelay × GPMC_FCLK(17)
– Case GpmcFCLKDivider = 1:
– H = 0.5 × OEExtraDelay × GPMC_FCLK(17) if (ClkActivationTime and OEOffTime are odd) or (ClkActivationTime and OEOffTime are even)
– H = (1 + 0.5 × OEExtraDelay) × GPMC_FCLK(17) otherwise
– Case GpmcFCLKDivider = 2:
– H = 0.5 × OEExtraDelay × GPMC_FCLK(17) if ((OEOffTime - ClkActivationTime) is a multiple of 3)
– H = (1 + 0.5 × OEExtraDelay) × GPMC_FCLK(17) if ((OEOffTime - ClkActivationTime - 1) is a multiple of 3)
– H = (2 + 0.5 × OEExtraDelay) × GPMC_FCLK(17) if ((OEOffTime - ClkActivationTime - 2) is a multiple of 3)

(10) For WE falling edge (WE activated):
– Case GpmcFCLKDivider = 0:
– I = 0.5 × WEExtraDelay × GPMC_FCLK(17)
– Case GpmcFCLKDivider = 1:
– I = 0.5 × WEExtraDelay × GPMC_FCLK(17) if (ClkActivationTime and WEOnTime are odd) or (ClkActivationTime and WEOnTime are even)
– I = (1 + 0.5 × WEExtraDelay) × GPMC_FCLK(17) otherwise
– Case GpmcFCLKDivider = 2:
– I = 0.5 × WEExtraDelay × GPMC_FCLK(17) if ((WEOnTime - ClkActivationTime) is a multiple of 3)
– I = (1 + 0.5 × WEExtraDelay) × GPMC_FCLK(17) if ((WEOnTime - ClkActivationTime - 1) is a multiple of 3)
– I = (2 + 0.5 × WEExtraDelay) × GPMC_FCLK(17) if ((WEOnTime - ClkActivationTime - 2) is a multiple of 3)
For WE rising edge (WE deactivated):
– Case GpmcFCLKDivider = 0:
– I = 0.5 × WEExtraDelay × GPMC_FCLK (17)
– Case GpmcFCLKDivider = 1:
– I = 0.5 × WEExtraDelay × GPMC_FCLK(17) if (ClkActivationTime and WEOffTime are odd) or (ClkActivationTime and WEOffTime are even)
– I = (1 + 0.5 × WEExtraDelay) × GPMC_FCLK(17) otherwise
– Case GpmcFCLKDivider = 2:
– I = 0.5 × WEExtraDelay × GPMC_FCLK(17) if ((WEOffTime - ClkActivationTime) is a multiple of 3)
– I = (1 + 0.5 × WEExtraDelay) × GPMC_FCLK(17) if ((WEOffTime - ClkActivationTime - 1) is a multiple of 3)
– I = (2 + 0.5 × WEExtraDelay) × GPMC_FCLK(17) if ((WEOffTime - ClkActivationTime - 2) is a multiple of 3)

(11) J = GPMC_FCLK(17)
(12) First transfer only for CLK DIV 1 mode.
(13) Half cycle; for all data after initial transfer for CLK DIV 1 mode.
(14) Half cycle of GPMC_CLK_OUT; for all data for modes other than CLK DIV 1 mode. GPMC_CLK_OUT divide down from GPMC_FCLK.
(15) In GPMC_CSn[x], x is equal to 0, 1, 2 or 3. In GPMC_WAIT[x], x is equal to 0 or 1.
(16) P = GPMC_CLK period in ns
(17) For read: K = (ADVRdOffTime - ADVOnTime) × (TimeParaGranularity + 1) × GPMC_FCLK(17)
For write: K = (ADVWrOffTime - ADVOnTime) × (TimeParaGranularity + 1) × GPMC_FCLK(17)
(18) GPMC_FCLK is general-purpose memory controller internal functional clock period in ns.
(19) 100MHz GPMC_FCLK selected - CTRLMMR_GPMC_CLKSEL[0] CLK_SEL = 1 = MAIN_PLL2_HSDIV7_CLKOUT (100/60 MHz)
(20) Trace length from GPMC pins to device assumed to be less than 4" and length matched to within 200ps for 100MHz Synchronous Mode.
(21) In div_by_1_mode, GPMC0_CLK refers to either GPMC0_CLKOUT or GPMC0_FCLK_MUX (free-running). Both signals are pin-muxed to the same pin
– GPMC_CONFIG1_i Register: GPMCFCLKDIVIDER = 0h:
– GPMC0_CLK frequency = GPMC_FCLK frequency
In not_div_by_1_mode, GPMC0_CLK only refers to GPMC0_CLKOUT. GPMC0_FCLK_MUX cannot be clock divided to match the GPMC0_CLKOUT frequency if GPMCFCLKDIVIDER > 0
– GPMC_CONFIG1_i Register: GPMCFCLKDIVIDER = 1h to 3h:
– GPMC0_CLK frequency = GPMC_FCLK frequency / (2 to 4)

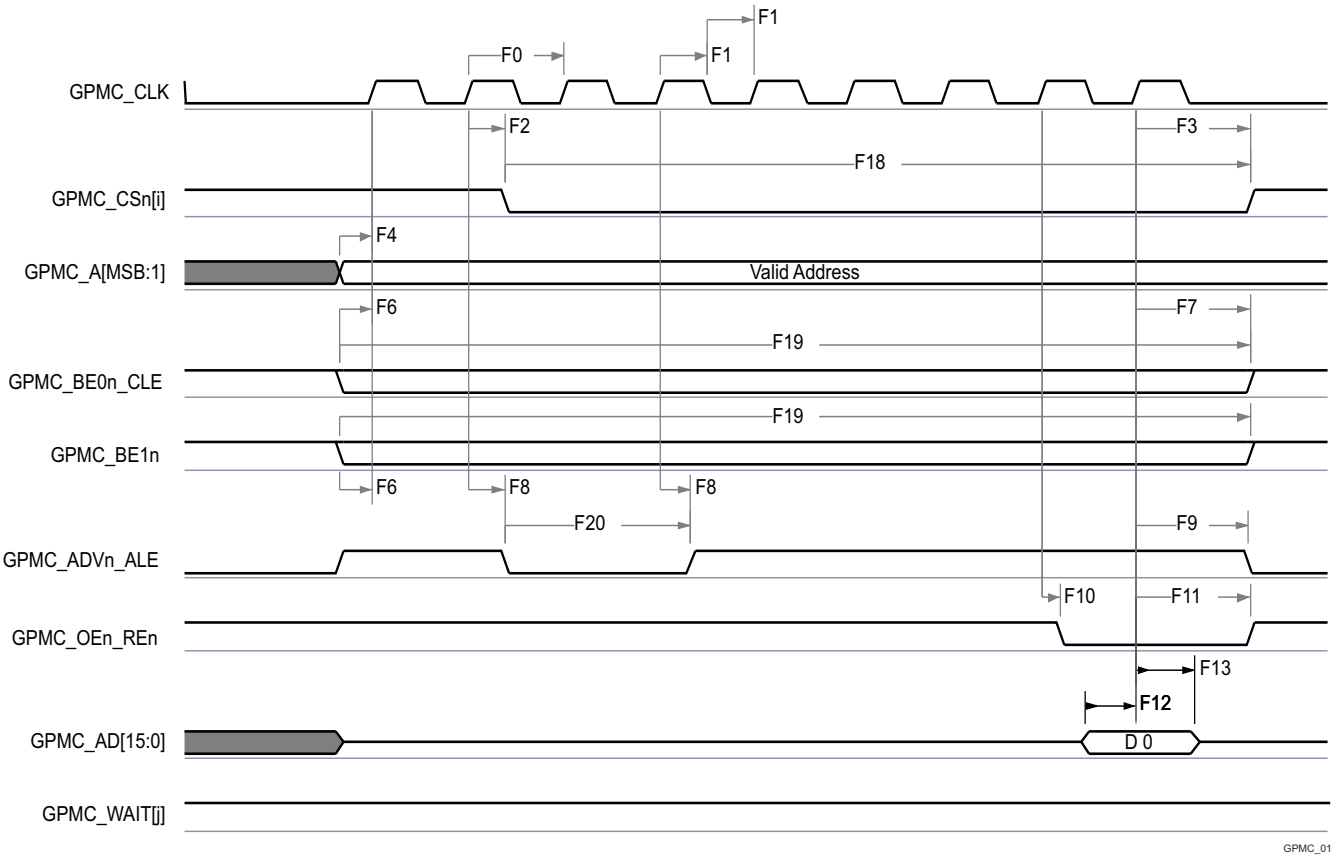

A. In GPMC_CSn[i], i is equal to 0, 1, 2 or 3.
B. In GPMC_WAIT[j], j is equal to 0 or 1.

Figure 6-27. GPMC and NOR Flash — Synchronous Single Read (GPMCFCLKDIVIDER = 0)

Copyright © 2026 Texas Instruments Incorporated

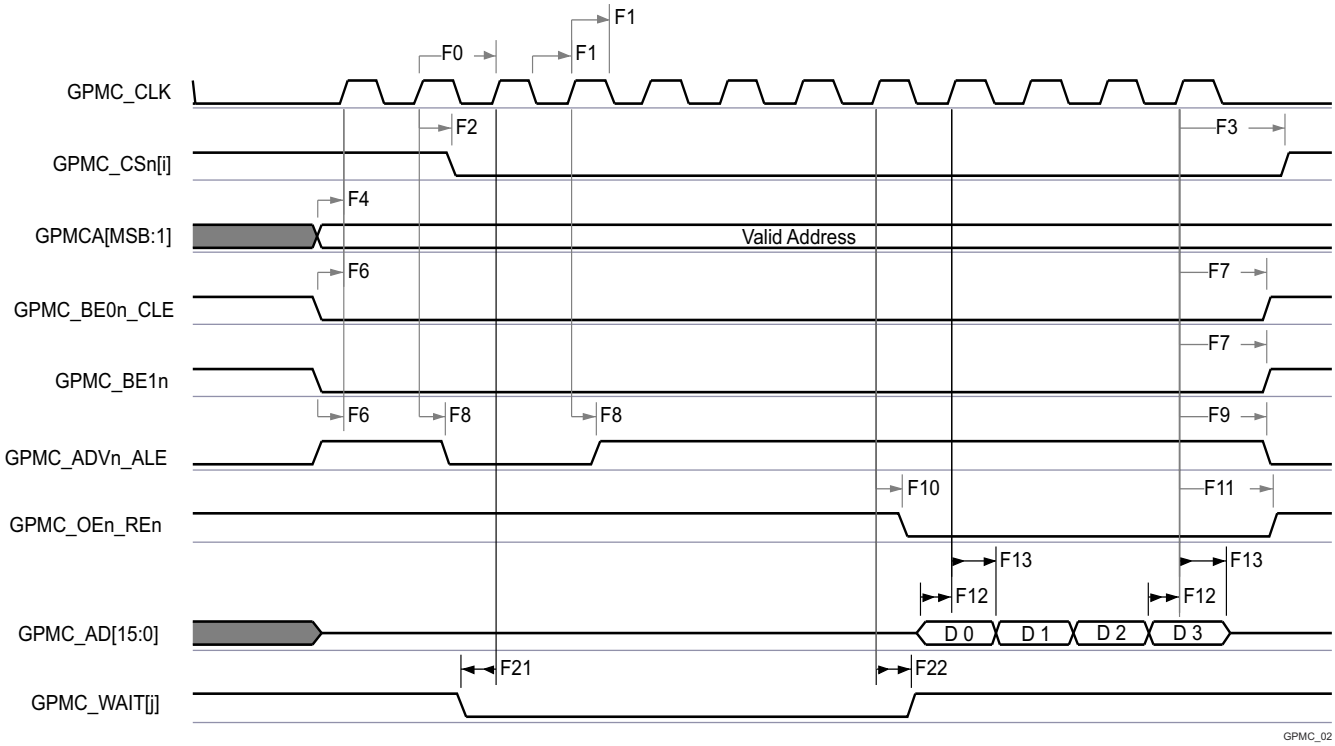

A. In GPMC_CSn[i], i is equal to 0, 1, 2 or 3.
B. In GPMC_WAIT[j], j is equal to 0 or 1.

Figure 6-28. GPMC and NOR Flash — Synchronous Burst Read — 4x16–bit (GPMCFCLKDIVIDER = 0)

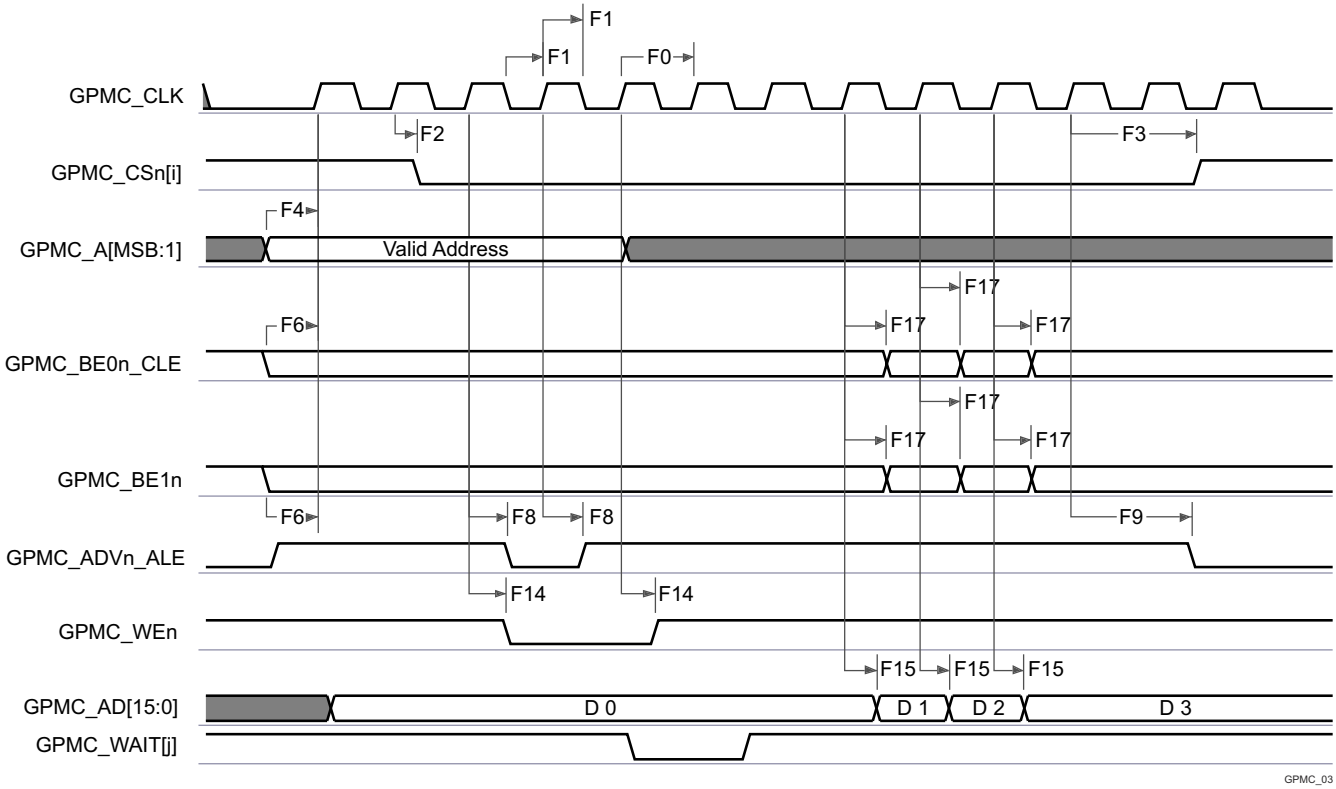

A. In GPMC_CSn[i], i is equal to 0, 1, 2 or 3.

B. In GPMC_WAIT[j], j is equal to 0 or 1.

Figure 6-29. GPMC and NOR Flash—Synchronous Burst Write (GPMCFCLKDIVIDER = 0)

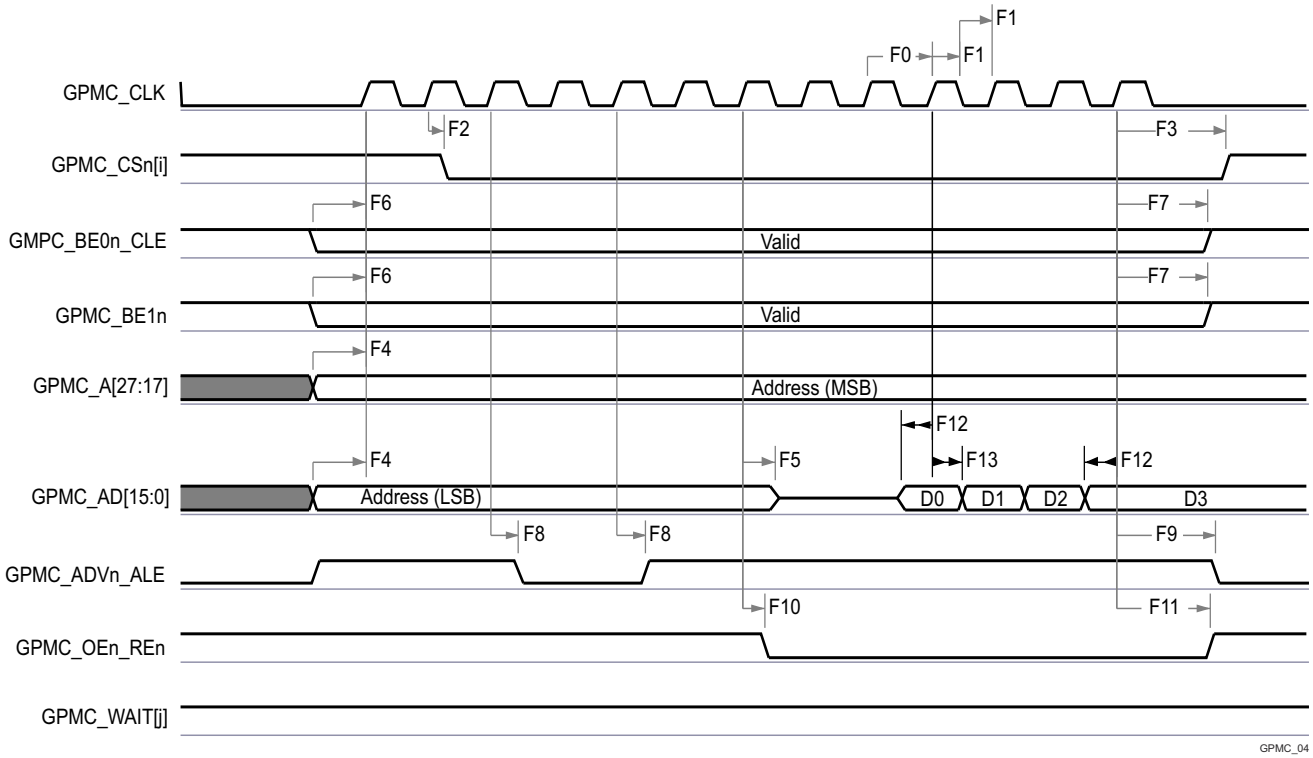

A. In GPMC_CSn[i], i is equal to 0, 1, 2 or 3.
B. In GPMC_WAIT[j], j is equal to 0 or 1.

Figure 6-30. GPMC and Multiplexed NOR Flash — Synchronous Burst Read

Copyright © 2026 Texas Instruments Incorporated

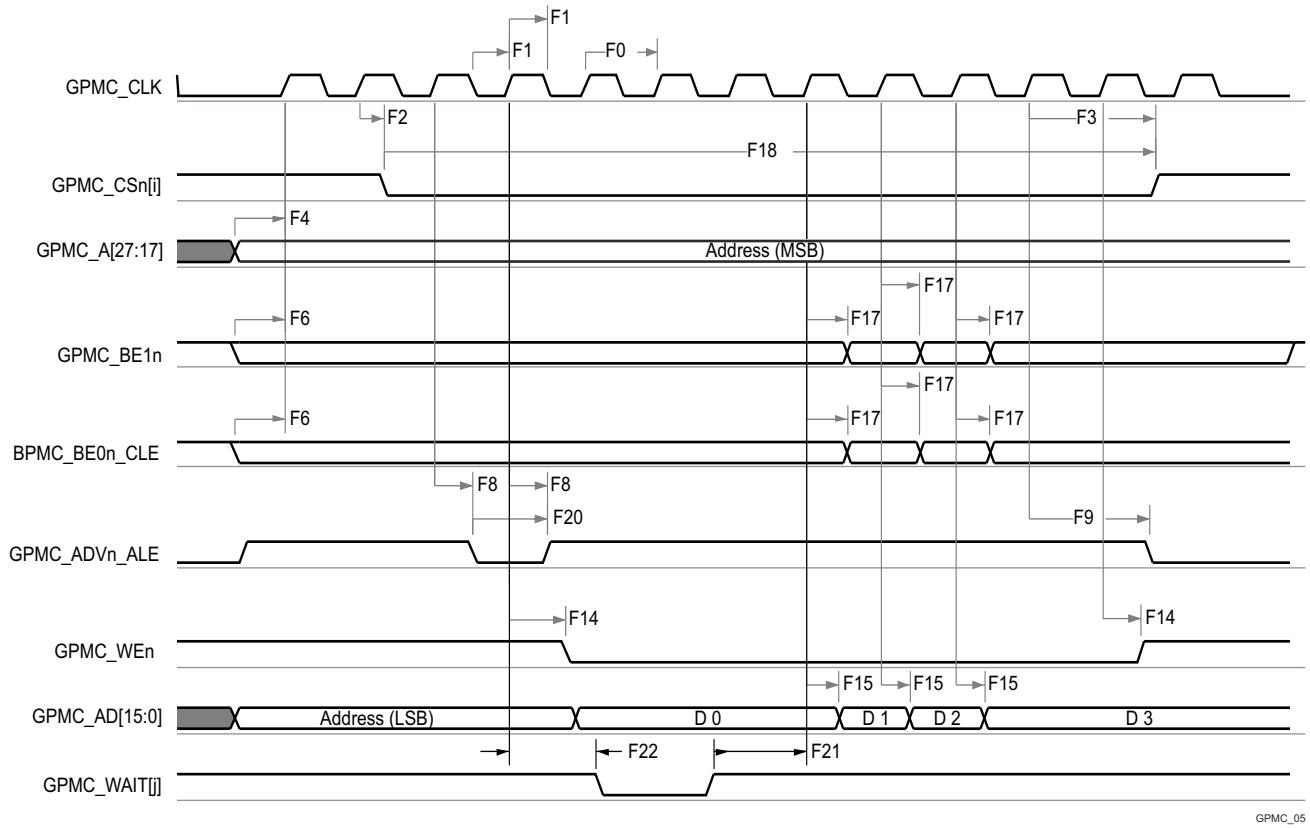

A. In GPMC_CSn[i], i is equal to 0, 1, 2 or 3.
B. In GPMC_WAIT[j], j is equal to 0 or 1.

Figure 6-31. GPMC and Multiplexed NOR Flash — Synchronous Burst Write

6.11.5.7.4 GPMC/NOR Flash Timing Requirements - Asynchronous Mode 100MHz (6)(7)

NO.	PARAMETER	DESCRIPTION	MIN	MAX	UNIT
FA5(1)	$t_{acc(d)}$	Data access time		H(5)	ns
FA20(2)	$t_{acc1\text{-}pgmode(d)}$	Page mode successive data access time		P(4)	ns
FA21(3)	$t_{acc2\text{-}pgmode(d)}$	Page mode first data access time		H(5)	ns

(1) The FA5 parameter illustrates the amount of time required to internally sample input data. It is expressed in number of GPMC functional clock cycles. From start of read cycle and after FA5 functional clock cycles, input data is internally sampled by active functional clock edge. FA5 value must be stored inside the AccessTime register bit field.
(2) The FA20 parameter illustrates amount of time required to internally sample successive input page data. It is expressed in number of GPMC functional clock cycles. After each access to input page data, next input page data is internally sampled by active functional clock edge after FA20 functional clock cycles. The FA20 value must be stored in the PageBurstAccessTime register bit field.
(3) The FA21 parameter illustrates amount of time required to internally sample first input page data. It is expressed in number of GPMC functional clock cycles. From start of read cycle and after FA21 functional clock cycles, first input page data is internally sampled by active functional clock edge. FA21 value must be stored inside the AccessTime register bit field.
(4) P = PageBurstAccessTime × (TimeParaGranularity + 1) × GPMC_FCLK(6)
(5) H = AccessTime × (TimeParaGranularity + 1) × GPMC_FCLK(6)
(6) GPMC_FCLK is general-purpose memory controller internal functional clock period in ns.
(7) 133MHz GPMC_FCLK selected - CTRLMMR_GPMC_CLKSEL[0] CLK_SEL = 0 = MAIN_PLL0_HSDIV3_CLKOUT (133/100/80 MHz)

6.11.5.7.5 GPMC/NOR Flash Switching Characteristics - Asynchronous Mode 100MHz
(14)(15)

NO.	PARAMETER	DESCRIPTION	MODE	MIN	MAX	UNIT
FA0	$t_{w(be[x]nV)}$	Pulse duration, GPMC0_BE0n_CLE, GPMC0_BE1n valid time	Read		N(12)	ns
			Write		N(12)	ns
FA1	$t_{w(csnV)}$	Pulse duration, GPMC0_CSn[x](13) low	Read		A(1)	ns
			Write		A(1)	ns
FA3	$t_{d(csnV-advnIV)}$	Delay time, GPMC0_CSn[x](13) valid to GPMC0_ADVn_ALE invalid	Read	B(2) – 2	B(2) + 2	ns
			Write	B(2) – 2	B(2) + 2	ns
FA4	$t_{d(csnV-oenIV)}$	Delay time, GPMC0_CSn[x](13) valid to GPMC0_OEn_REn invalid (Single read)		C(3) – 2	C(3) + 2	ns
FA9	$t_{d(aV-csnV)}$	Delay time, GPMC0_A[27:1] valid to GPMC0_CSn[x](13) valid		J(9) – 2	J(9) + 2	ns
FA10	$t_{d(be[x]nV-csnV)}$	Delay time, GPMC0_BE0n_CLE, GPMC0_BE1n valid to GPMC0_CSn[x](13) valid		J(9) – 2	J(9) + 2	ns
FA12	$t_{d(csnV-advnV)}$	Delay time, GPMC0_CSn[x](13) valid to GPMC0_ADVn_ALE valid		K(10) – 2	K(10) + 2	ns
FA13	$t_{d(csnV-oenV)}$	Delay time, GPMC0_CSn[x](13) valid to GPMC0_OEn_REn valid		L(11) – 2	L(11) + 2	ns
FA16	$t_{w(aIV)}$	Pulse duration GPMC0_A[26:1] invalid between two successive read and write accesses		G(7)		ns
FA18	$t_{d(csnV-oenIV)}$	Delay time, GPMC0_CSn[x](13) valid to GPMC0_OEn_REn invalid (Burst read)		I(8) – 2	I(8) + 2	ns
FA20	$t_{w(av)}$	Pulse duration, GPMC0_A[27:1] valid - 2nd, 3rd, and 4th accesses		D(4)		ns
FA25	$t_{d(csnV-wenIV)}$	Delay time, GPMC0_CSn[x](13) valid to GPMC0_WEn valid		E(5) – 2	E(5) + 2	ns
FA27	$t_{d(csnV-wenIV)}$	Delay time, GPMC0_CSn[x](13) valid to GPMC0_WEn invalid		F(6) – 2	F(6) + 2	ns
FA28	$t_{d(wenV-dV)}$	Delay time, GPMC0_WEn valid to GPMC0_AD[31:0] valid			2	ns
FA29	$t_{d(dV-csnV)}$	Delay time, GPMC0_AD[31:0] valid to GPMC0_CSn[x](13) valid		J(9) – 2	J(10) + 2	ns
FA37	$t_{d(oenV-aIV)}$	Delay time, GPMC0_OEn_REn valid to GPMC0_AD[31:0] phase end			2	ns

(1) For single read: A = (CSRdOffTime - CSOnTime) × (TimeParaGranularity + 1) × GPMC_FCLK(14)
For single write: A = (CSWrOffTime - CSOnTime) × (TimeParaGranularity + 1) × GPMC_FCLK(14)
For burst read: A = (CSRdOffTime - CSOnTime + (n - 1) × PageBurstAccessTime) × (TimeParaGranularity + 1) × GPMC_FCLK(14)
For burst write: A = (CSWrOffTime - CSOnTime + (n - 1) × PageBurstAccessTime) × (TimeParaGranularity + 1) × GPMC_FCLK(14)
with n being the page burst access number
(2) For reading: B = ((ADVRdOffTime - CSOnTime) × (TimeParaGranularity + 1) + 0.5 × (ADVExtraDelay - CSExtraDelay)) × GPMC_FCLK(14)
For writing: B = ((ADVWrOffTime - CSOnTime) × (TimeParaGranularity + 1) + 0.5 × (ADVExtraDelay - CSExtraDelay)) × GPMC_FCLK(14)
(3) C = \((OEOffTime - CSOnTime) × (TimeParaGranularity + 1) + 0.5 × (OEExtraDelay - CSExtraDelay\)) × GPMC_FCLK(14)
(4) D = PageBurstAccessTime × (TimeParaGranularity + 1) × GPMC_FCLK(14)
(5) E = \((WEOnTime - CSOnTime) × (TimeParaGranularity + 1) + 0.5 × (WEExtraDelay - CSExtraDelay\)) × GPMC_FCLK(14)
(6) F = \((WEOffTime - CSOnTime) × (TimeParaGranularity + 1) + 0.5 × (WEExtraDelay - CSExtraDelay\)) × GPMC_FCLK(14)
(7) G = Cycle2CycleDelay × GPMC_FCLK(14)
(8) I = \((OEOffTime + (n - 1) × PageBurstAccessTime - CSOnTime) × (TimeParaGranularity + 1) + 0.5 × (OEExtraDelay - CSExtraDelay\)) × GPMC_FCLK(14)
(9) J = (CSOnTime × (TimeParaGranularity + 1) + 0.5 × CSExtraDelay) × GPMC_FCLK(14)
(10) K = \((ADVOnTime - CSOnTime) × (TimeParaGranularity + 1) + 0.5 × (ADVExtraDelay - CSExtraDelay\)) × GPMC_FCLK(14)
(11) L = \((OEOnTime - CSOnTime) × (TimeParaGranularity + 1) + 0.5 × (OEExtraDelay - CSExtraDelay\)) × GPMC_FCLK(14)
(12) For single read: N = RdCycleTime × (TimeParaGranularity + 1) × GPMC_FCLK(14)
For single write: N = WrCycleTime × (TimeParaGranularity + 1) × GPMC_FCLK(14)

Copyright © 2026 Texas Instruments Incorporated

For burst read: N = (RdCycleTime + (n - 1) × PageBurstAccessTime) × (TimeParaGranularity + 1) × GPMC_FCLK(14)
For burst write: N = (WrCycleTime + (n - 1) × PageBurstAccessTime) × (TimeParaGranularity + 1) × GPMC_FCLK(14)

(13) In GPMC_CSn[x], x is equal to 0, 1, 2 or 3.
(14) GPMC_FCLK is general-purpose memory controller internal functional clock period in ns.
(15) 133MHz GPMC_FCLK selected - CTRLMMR_GPMC_CLKSEL[0] CLK_SEL = 0 = MAIN_PLL0_HSDIV3_CLKOUT (133/100/80 MHz)

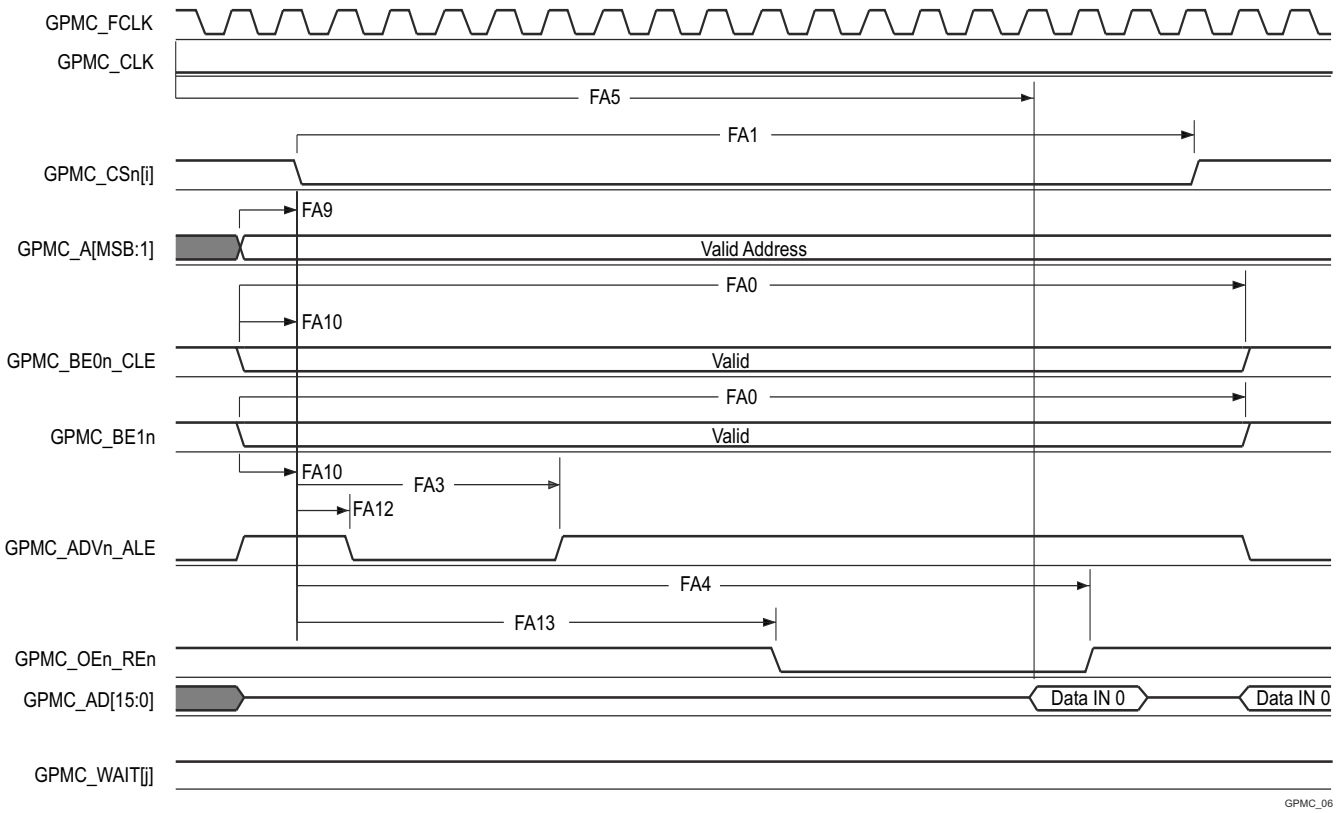

A. In GPMC_CSn[i], i is equal to 0, 1, 2 or 3. In GPMC_WAIT[j], j is equal to 0 or 1.
B. FA5 parameter illustrates amount of time required to internally sample input data. It is expressed in number of GPMC functional clock cycles. From start of read cycle and after FA5 functional clock cycles, input data will be internally sampled by active functional clock edge. FA5 value must be stored inside AccessTime register bits field.
C. GPMC_FCLK is an internal clock (GPMC functional clock) not provided externally.

Figure 6-32. GPMC and NOR Flash — Asynchronous Read — Single Word

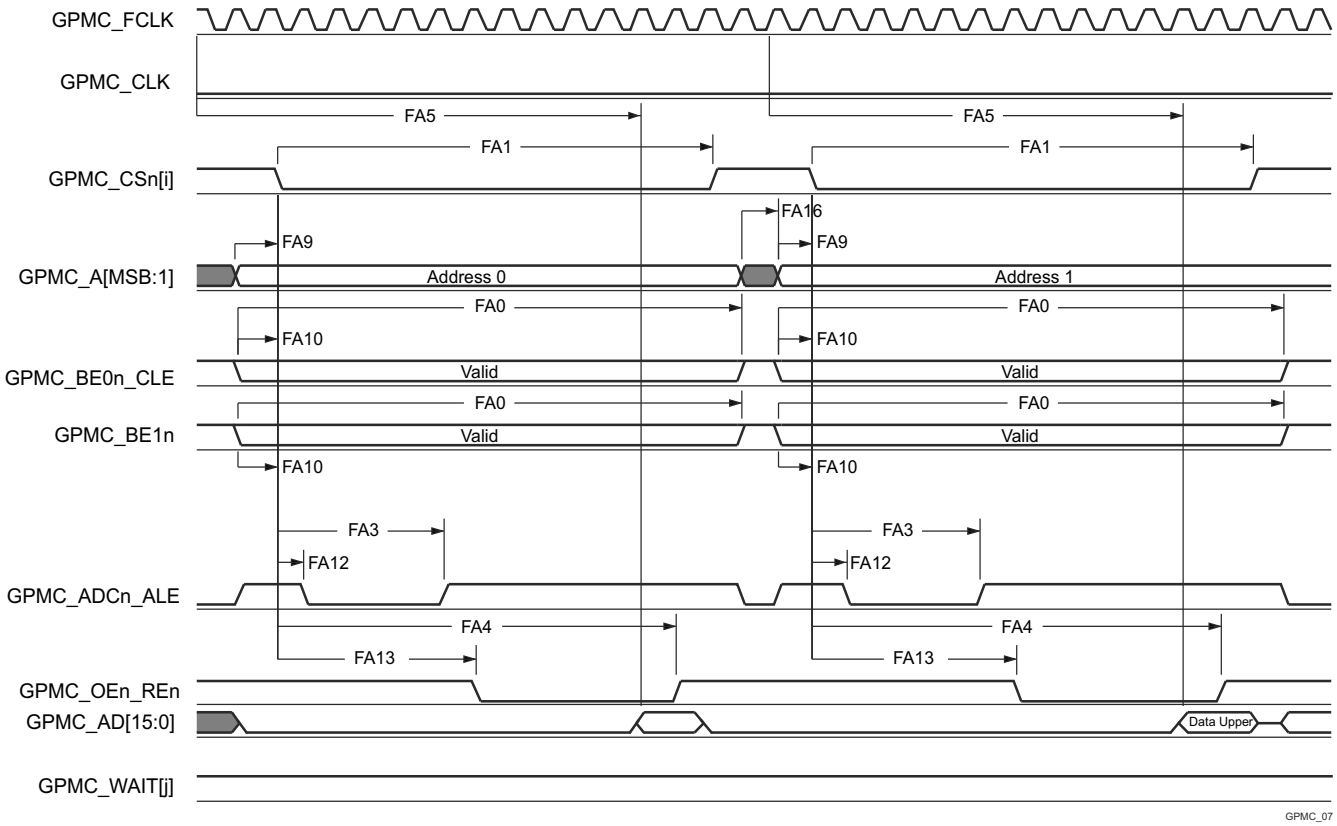

A. In GPMC_CSn[i], i is equal to 0, 1, 2 or 3. In GPMC_WAIT[j], j is equal to 0 or 1.

B. FA5 parameter illustrates amount of time required to internally sample input data. It is expressed in number of GPMC functional clock cycles. From start of read cycle and after FA5 functional clock cycles, input data will be internally sampled by active functional clock edge. FA5 value must be stored inside AccessTime register bits field.

C. GPMC_FCLK is an internal clock (GPMC functional clock) not provided externally.

Figure 6-33. GPMC and NOR Flash — Asynchronous Read — 32–Bit

Copyright © 2026 Texas Instruments Incorporated

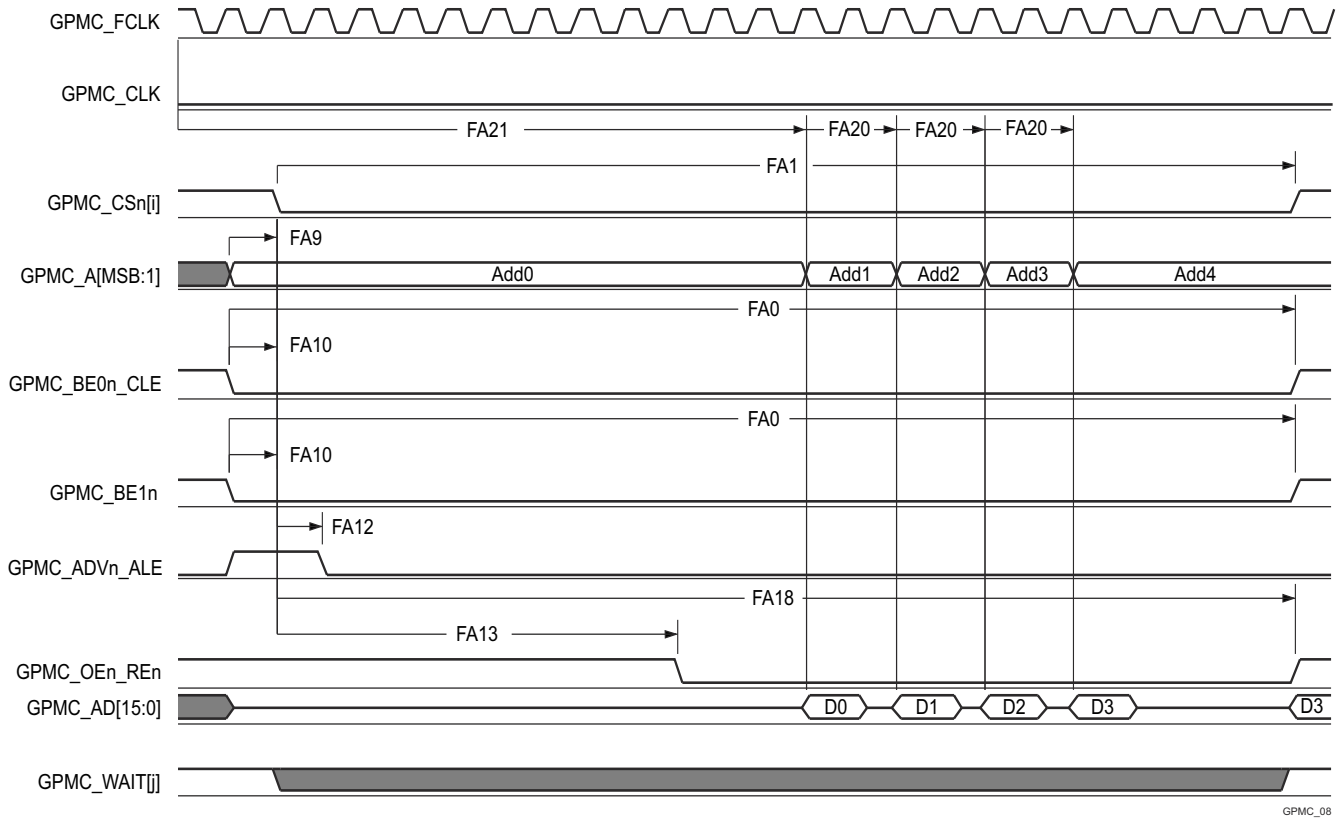

A. In GPMC_CSn[i], i is equal to 0, 1, 2 or 3. In GPMC_WAIT[j], j is equal to 0 or 1.

B. FA21 parameter illustrates amount of time required to internally sample first input page data. It is expressed in number of GPMC functional clock cycles. From start of read cycle and after FA21 functional clock cycles, first input page data will be internally sampled by active functional clock edge. FA21 calculation must be stored inside AccessTime register bits field.

C. FA20 parameter illustrates amount of time required to internally sample successive input page data. It is expressed in number of GPMC functional clock cycles. After each access to input page data, next input page data will be internally sampled by active functional clock edge after FA20 functional clock cycles. FA20 is also the duration of address phases for successive input page data (excluding first input page data). FA20 value must be stored in PageBurstAccessTime register bits field.

D. GPMC_FCLK is an internal clock (GPMC functional clock) not provided externally.

Figure 6-34. GPMC and NOR Flash — Asynchronous Read — Page Mode 4x16–Bit

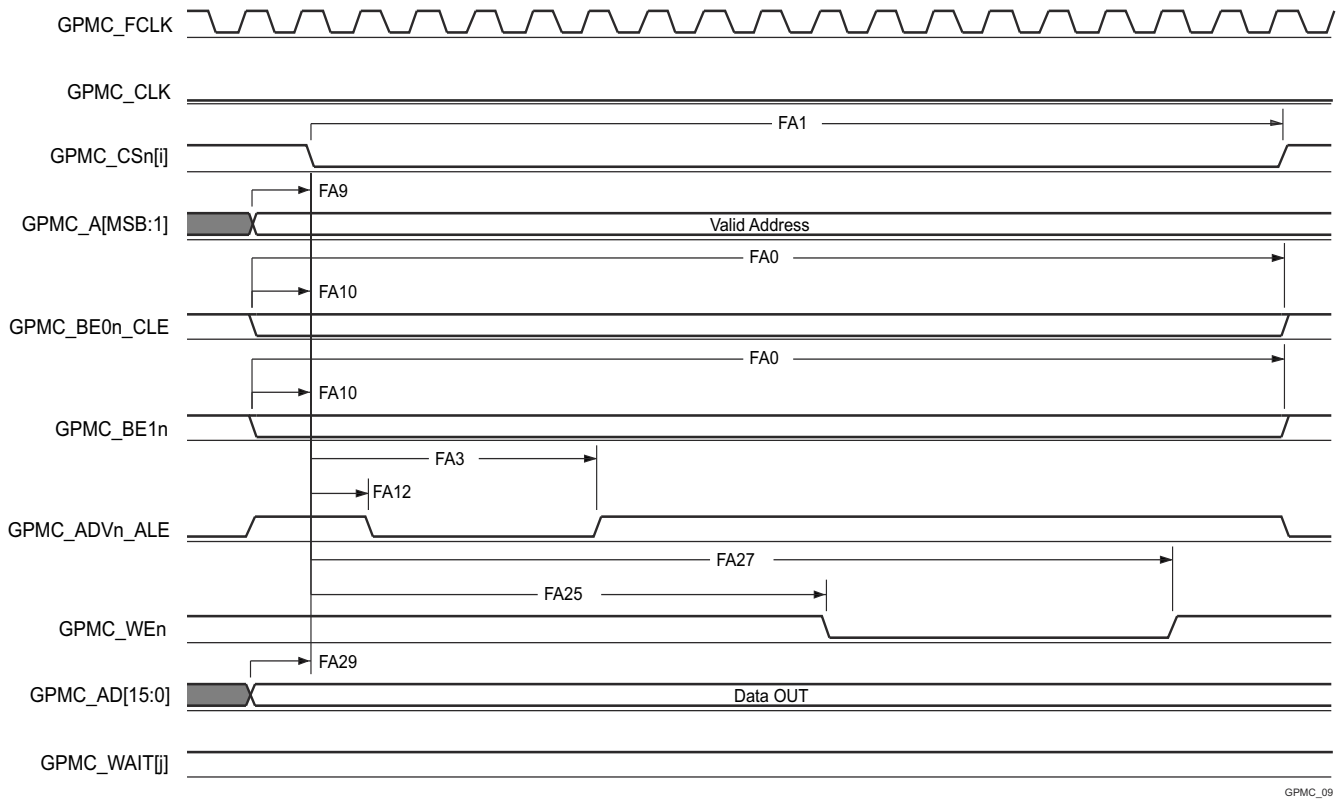

A. In GPMC_CSn[i], i is equal to 0, 1, 2 or 3. In GPMC_WAIT[j], j is equal to 0 or 1.

Figure 6-35. GPMC and NOR Flash — Asynchronous Write — Single Word

Copyright © 2026 Texas Instruments Incorporated

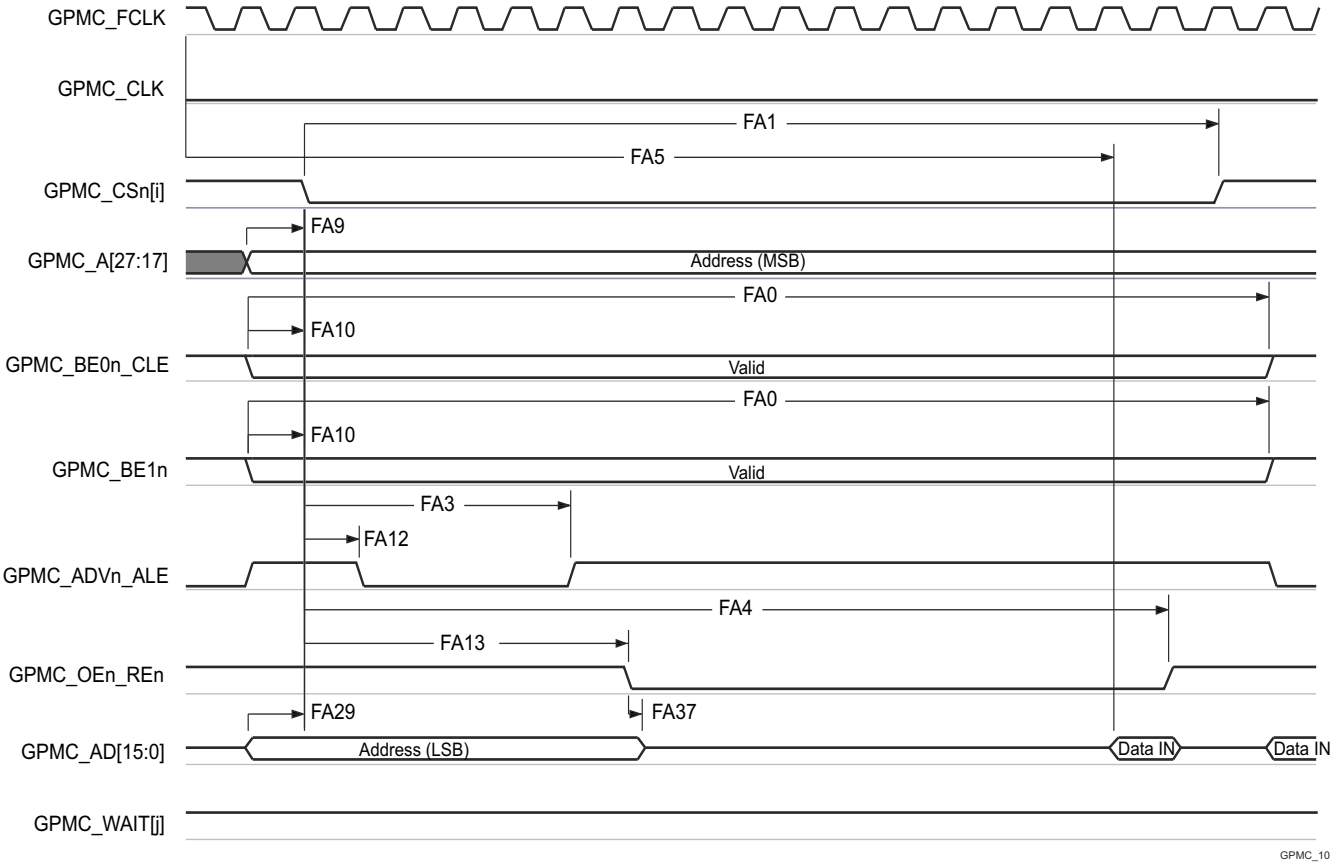

A. In GPMC_CSn[i], i is equal to 0, 1, 2 or 3. In GPMC_WAIT[j], j is equal to 0 or 1.

B. FA5 parameter illustrates amount of time required to internally sample input data. It is expressed in number of GPMC functional clock cycles. From start of read cycle and after FA5 functional clock cycles, input data will be internally sampled by active functional clock edge. FA5 value must be stored inside AccessTime register bits field.

C. GPMC_FCLK is an internal clock (GPMC functional clock) not provided externally.

Figure 6-36. GPMC and Multiplexed NOR Flash — Asynchronous Read — Single Word

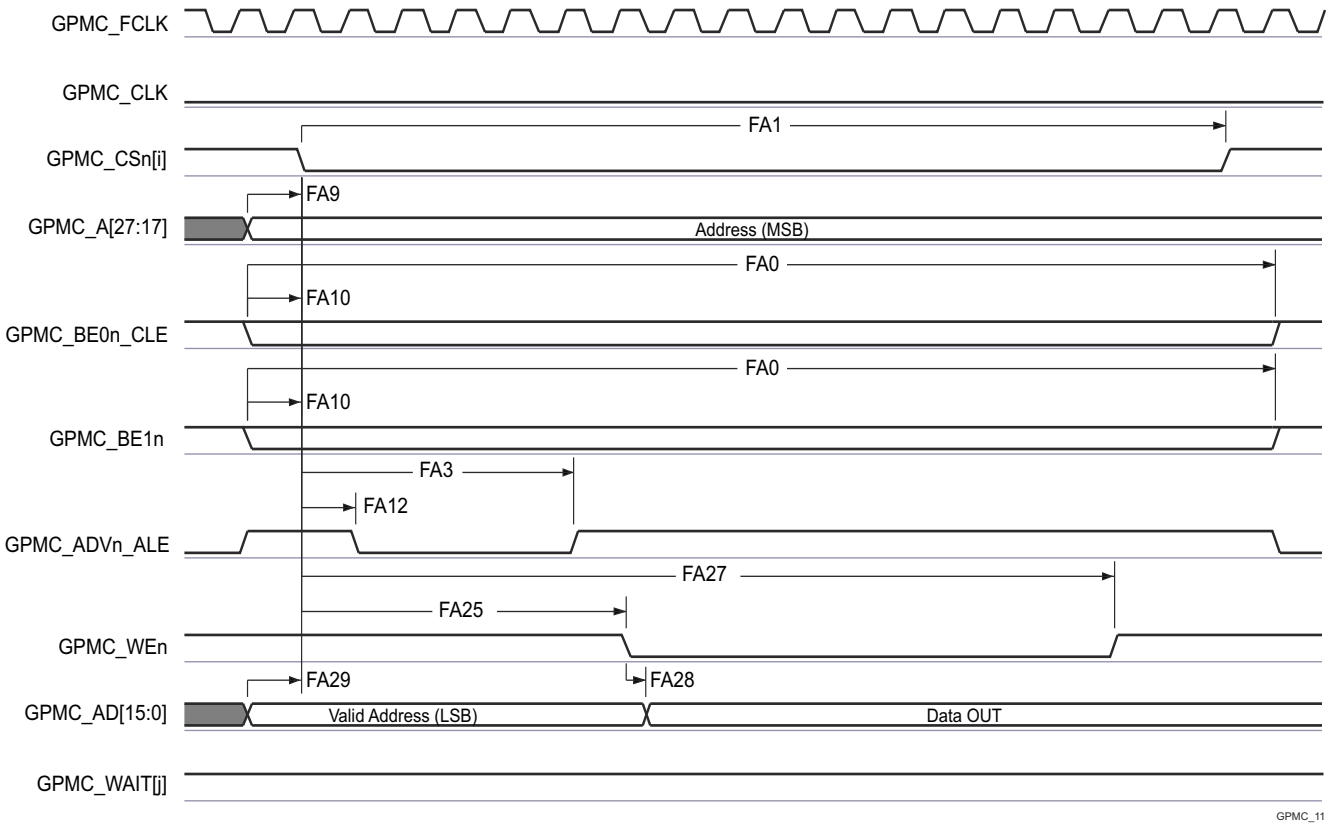

A. In GPMC_CSn[i], i is equal to 0, 1, 2 or 3. In GPMC_WAIT[j], j is equal to 0 or 1.

Figure 6-37. GPMC and Multiplexed NOR Flash — Asynchronous Write — Single Word

6.11.5.7.6 GPMC/NAND Flash Timing Requirements - Asynchronous Mode 100MHz (4)

NO.	PARAMETER	DESCRIPTION	MIN	MAX	UNIT
GNF12(1)	$t_{acc(d)}$	Access time, GPMC0_AD[31:0](3)		J(2)	ns

(1) The GNF12 parameter illustrates the amount of time required to internally sample input data. It is expressed in number of GPMC functional clock cycles. From start of the read cycle and after GNF12 functional clock cycles, input data is internally sampled by the active functional clock edge. The GNF12 value must be stored inside AccessTime register bit field.
(2) J = AccessTime × (TimeParaGranularity + 1) × GPMC_FCLK(3)
(3) GPMC_FCLK is general-purpose memory controller internal functional clock.
(4) 133MHz GPMC_FCLK selected - CTRLMMR_GPMC_CLKSEL[0] CLK_SEL = 0 = MAIN_PLL0_HSDIV3_CLKOUT (133/100/80 MHz)

Copyright © 2026 Texas Instruments Incorporated

6.11.5.7.7 GPMC/NAND Flash Switching Characteristics - Asynchronous Mode 100MHz (15)

NO.	PARAMETER	DESCRIPTION	MIN	MAX	UNIT
GNF0	$t_{w(wenV)}$	Pulse duration, GPMC0_WEn valid	A(1)		ns
GNF1	$t_{d(csnV-wenV)}$	Delay time, GPMC0_CSn[x](13) valid to GPMC0_WEn valid	B(2) – 2	B(2) + 2	ns
GNF2	$t_{w(cleH-wenV)}$	Delay time, GPMC0_BE0n_CLE high to GPMC0_WEn valid	C(3) – 2	C(3) + 2	ns
GNF3	$t_{w(wenV-dV)}$	Delay time, GPMC0_AD[31:0] valid to GPMC0_WEn valid	D(4) – 2	D(4) + 2	ns
GNF4	$t_{w(wenIV-dIV)}$	Delay time, GPMC0_WEn invalid to GPMC0_AD[31:0] invalid	E(5) – 2	E(5) + 2	ns
GNF5	$t_{w(wenIV-cleIV)}$	Delay time, GPMC0_WEn invalid to GPMC0_BE0n_CLE invalid	F(6) – 2	F(6) + 2	ns
GNF6	$t_{w(wenIV-csnIV)}$	Delay time, GPMC0_WEn invalid to GPMC0_CSn[x](13) invalid	G(7) – 2	G(7) + 2	ns
GNF7	$t_{w(aleH-wenV)}$	Delay time, GPMC0_ADVn_ALE high to GPMC0_WEn valid	C(3) – 2	C(3) + 2	ns
GNF8	$t_{w(wenIV-aleIV)}$	Delay time, GPMC0_WEn invalid to GPMC0_ADVn_ALE invalid	F(6) – 2	F(6) + 2	ns
GNF9	$t_{c(wen)}$	Cycle time, write		H(8)	ns
GNF10	$t_{d(csnV-oenV)}$	Delay time, GPMC0_CSn[x](13) valid to GPMC0_OEn_REn valid	I(9) – 2	I(9) + 2	ns
GNF13	$t_{w(oenV)}$	Pulse duration, GPMC0_OEn_REn valid		K(10)	ns
GNF14	$t_{c(oen)}$	Cycle time, read	L(11)		ns
GNF15	$t_{w(oenIV-csnIV)}$	Delay time, GPMC0_OEn_REn invalid to GPMC0_CSn[x](13) invalid	M(12) – 2	M(12) + 2	ns

(1) A = (WEOffTime - WEOnTime) × (TimeParaGranularity + 1) × GPMC_FCLK(14)
(2) B = \((WEOnTime - CSOnTime) × (TimeParaGranularity + 1) + 0.5 × (WEExtraDelay - CSExtraDelay\)) × GPMC_FCLK(14)
(3) C = \((WEOnTime - ADVOnTime) × (TimeParaGranularity + 1) + 0.5 × (WEExtraDelay - ADVExtraDelay\)) × GPMC_FCLK(14)
(4) D = (WEOnTime × (TimeParaGranularity + 1) + 0.5 × WEExtraDelay) × GPMC_FCLK(14)
(5) E = \((WrCycleTime - WEOffTime) × (TimeParaGranularity + 1) - 0.5 × WEExtraDelay) × GPMC_FCLK(14)
(6) F = \((ADVWrOffTime - WEOffTime) × (TimeParaGranularity + 1) + 0.5 × (ADVExtraDelay - WEExtraDelay\)) × GPMC_FCLK(14)
(7) G = \((CSWrOffTime - WEOffTime) × (TimeParaGranularity + 1) + 0.5 × (CSExtraDelay - WEExtraDelay\)) × GPMC_FCLK(14)
(8) H = WrCycleTime × (1 + TimeParaGranularity) × GPMC_FCLK(14)
(9) I = \((OEOnTime - CSOnTime) × (TimeParaGranularity + 1) + 0.5 × (OEExtraDelay - CSExtraDelay\)) × GPMC_FCLK(14)
(10) K = (OEOffTime - OEOnTime) × (1 + TimeParaGranularity) × GPMC_FCLK(14)
(11) L = RdCycleTime × (1 + TimeParaGranularity) × GPMC_FCLK(14)
(12) M = \((CSRdOffTime - OEOffTime) × (TimeParaGranularity + 1) + 0.5 × (CSExtraDelay - OEExtraDelay\)) × GPMC_FCLK(14)
(13) In GPMC_CSn[x], x is equal to 0, 1, 2 or 3.
(14) 133MHz GPMC_FCLK selected - CTRLMMR_GPMC_CLKSEL[0] CLK_SEL = 0 = MAIN_PLL0_HSDIV3_CLKOUT (133/100/80 MHz)

Copyright © 2026 Texas Instruments Incorporated

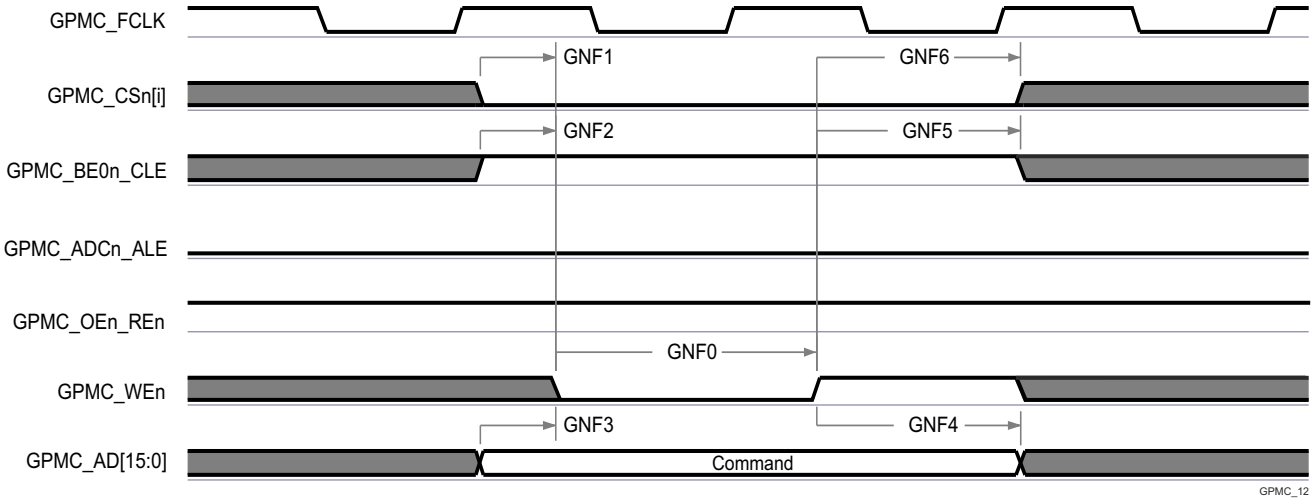

A. In GPMC_CSn[i], i is equal to 0, 1, 2 or 3.

Figure 6-38. GPMC and NAND Flash — Command Latch Cycle

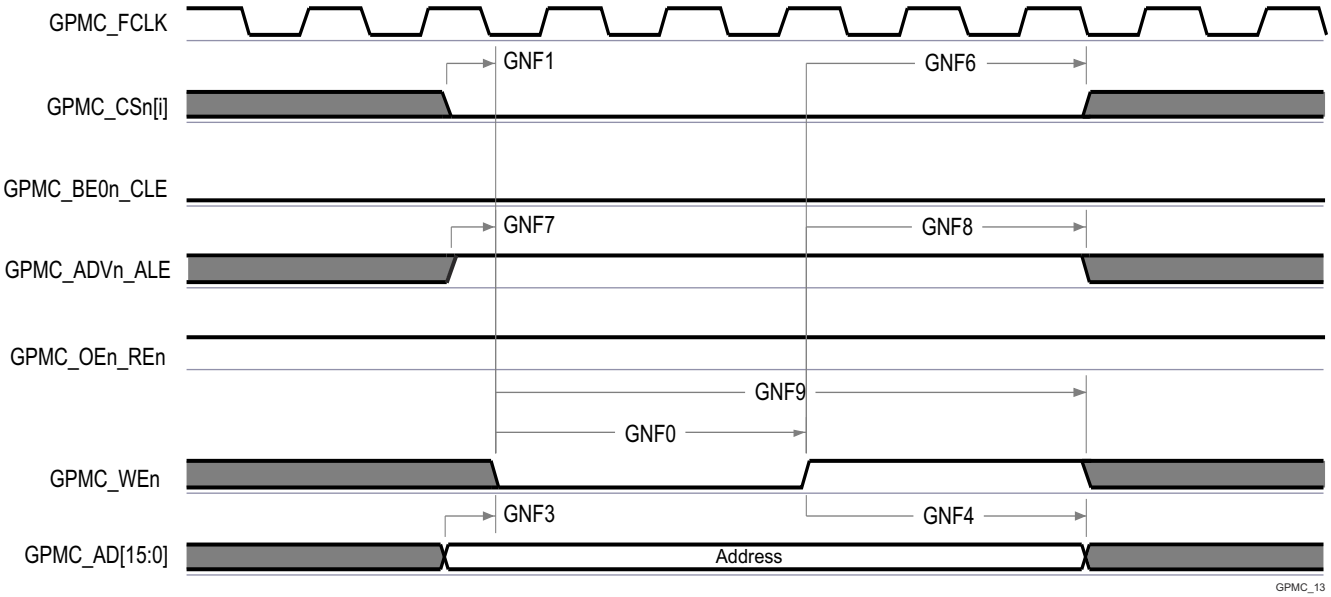

A. In GPMC_CSn[i], i is equal to 0, 1, 2 or 3.

Figure 6-39. GPMC and NAND Flash — Address Latch Cycle

Copyright © 2026 Texas Instruments Incorporated

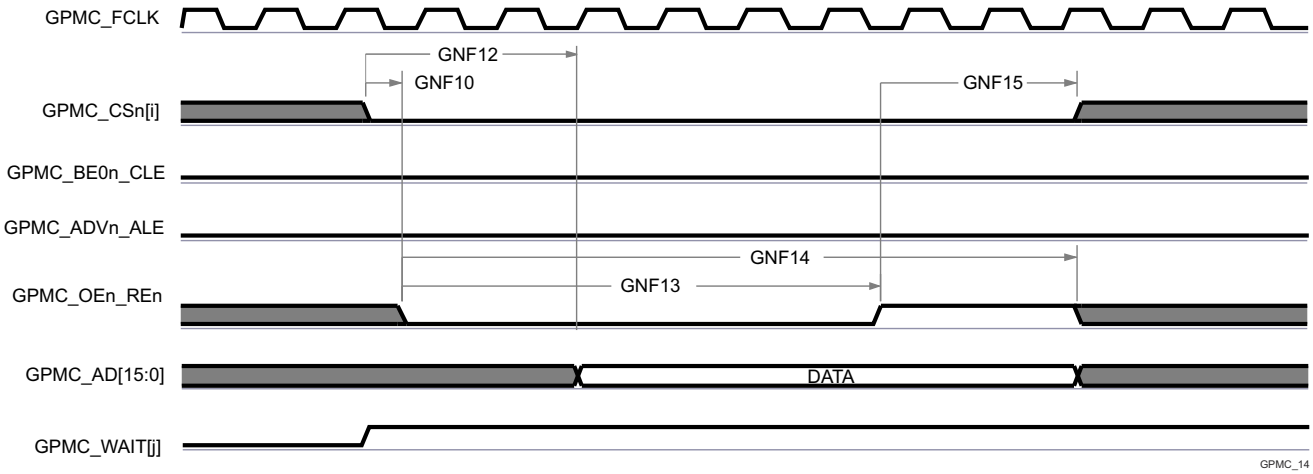

A. GNF12 parameter illustrates amount of time required to internally sample input data. It is expressed in number of GPMC functional clock cycles. From start of read cycle and after GNF12 functional clock cycles, input data will be internally sampled by active functional clock edge. GNF12 value must be stored inside AccessTime register bits field.
B. GPMC_FCLK is an internal clock (GPMC functional clock) not provided externally.
C. In GPMC_CSn[i], i is equal to 0, 1, 2 or 3. In GPMC_WAIT[j], j is equal to 0 or 1.

Figure 6-40. GPMC and NAND Flash — Data Read Cycle

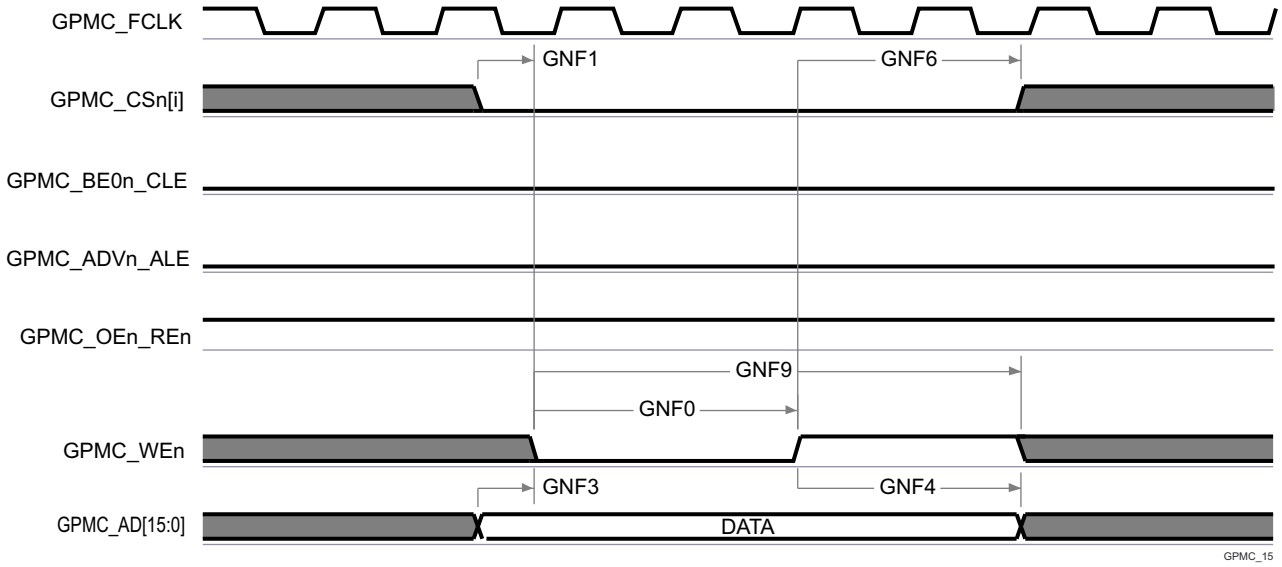

A. In GPMC_CSn[i], i is equal to 0, 1, 2 or 3.

Figure 6-41. GPMC and NAND Flash — Data Write Cycle

6.11.5.8 Inter-Integrated Circuit (I^2C)

For more details about features and additional description information on the device Inter-Integrated Circuit, see the corresponding subsections within *Signal Descriptions* and *Detailed Description* sections.

For more information, see the *Inter-Integrated Circuit (I2C)* section in the device TRM.

Copyright © 2026 Texas Instruments Incorporated

6.11.5.8.1 I2C

The device contains four multicontroller Inter-Integrated Circuit (I2C) controllers. Each I2C controller was designed to be compliant to the Philips I^2C-bus™ specification version 2.1. However, the device IOs are not fully compliant to the I2C electrical specification. The speeds supported and exceptions are described per port below:

- I2C1, I2C2, and I2C3
  - Speeds:
    - Standard-mode (up to 100Kbits/s)
      - 3.3V
    - Fast-mode (up to 400Kbits/s)
      - 3.3V
  - Exceptions:
    - The IOs associated with these ports are not compliant to the fall time requirements defined in the I2C specification because the IOs are implemented with higher performance LVCMOS push-pull IOs that were designed to support other signal functions that could not be implemented with I2C compatible IOs. The LVCMOS IOs being used on these ports are connected so they emulate open-drain outputs. This emulation is achieved by forcing a constant low output and disabling the output buffer to enter the Hi-Z state.
    - The I2C specification defines a maximum input voltage V_{IH} of ($V_{DD_{max}}$ + 0.5V), which exceeds the absolute maximum ratings for the device IOs. The system must be designed to provide the I2C signals never exceed the limits defined in the *Absolute Maximum Ratings* section of this data sheet.
- I2C0
  - Speeds:
    - Standard-mode (up to 100Kbits/s)
      - 3.3V
    - Fast-mode (up to 400Kbits/s)
      - 3.3V
  - Exceptions:
    - The IOs associated with this port were not design to support Hs-mode.
    - The rise and fall times of the I2C signals connected to these ports must not exceed a slew rate of 0.8V/ns (or 8E+7V/s). This limit is more restrictive than the minimum fall time limits defined in the I2C specification. Therefore, it may be necessary to add additional capacitance to the I2C signals to slow the rise and fall times such that the signals do not exceed a slew rate of 0.8V/ns.
    - The I2C specification defines a maximum input voltage V_{IH} of ($V_{DD_{max}}$ + 0.5V), which exceeds the absolute maximum ratings for the device IOs. The system must be designed to make sure the I2C signals never exceed the limits defined in the *Absolute Maximum Ratings* section of this data sheet.

Refer to the Philips I2C-bus specification version 2.1 for timing details.

For more details about features and additional description information on the device Inter-integrated Circuit, see the corresponding subsections within *Signal Descriptions* and *Detailed Description* sections.

6.11.5.9 Local Interconnect Network (LIN)

Note

The device has multiple LIN modules. LINn is a generic prefix applied to LIN signal names, where n represents the specific LIN module.

For more information, see the *Local Interconnect Network (LIN) Module* section in the device TRM.

6.11.5.9.1 LIN Timing Conditions

PARAMETER		MIN	MAX	UNIT
INPUT CONDITIONS				
SR_I	Input Slew Rate	2	15	V/ns
OUTPUT CONDITIONS				
C_L	Output Load Capacitance	5	20	pF

6.11.5.9.2 LIN Timing Requirements

NO.	PARAMETER	DESCRIPTION	MIN	MAX	UNIT
LIN2	$t_{d(LINn_RX)}$	Delay time, LINn_RX shift register to LINn_RX pin	0	10	ns

6.11.5.9.3 LIN Switching Characteristics

NO.	PARAMETER	DESCRIPTION	MIN	MAX	UNIT
LIN4	$t_{d(LINn_TX)}$	Delay time, LINn_TX shift register to LINn_TX pin		10	ns

Copyright © 2026 Texas Instruments Incorporated

6.11.5.10 Modular Controller Area Network (MCAN)

For more details about features and additional description information on the device Controller Area Network Interface, see the corresponding subsections within *Signal Descriptions* and *Detailed Description* sections.

Note

The device has multiple MCAN modules. MCANn is a generic prefix applied to MCAN signal names, where n represents the specific MCAN module.

For more information, see *Controller Area Network (MCAN)* section in the device TRM.

6.11.5.10.1 MCAN Timing Conditions

PARAMETER		MIN	MAX	UNIT
INPUT CONDITIONS				
SR_I	Input Slew Rate	2	15	V/ns
OUTPUT CONDITIONS				
C_L	Output Load Capacitance	5	20	pF

6.11.5.10.2 MCAN Switching Characteristics

NO.	PARAMETER	DESCRIPTION	MIN	MAX	UNIT
M1	$t_{d(MCAN_TX)}$	Delay time, transmit shift register to MCANn_TX pin		10	ns
M2	$t_{d(MCAN_RX)}$	Delay time, MCANn_RX pin to receive shift register		10	ns

6.11.5.11 Serial Peripheral Interface (SPI)

For more details about features and additional description information on the device Serial Port Interface, see the corresponding subsections within *Signal Descriptions* and *Detailed Description* sections.

Note

The device has multiple SPI modules. The generic SPI_ prefix is used to represent the signal names for all SPI instances.

For more information, see the *Serial Peripheral Interface (SPI)* section in the device TRM.

6.11.5.11.1 SPI Timing Conditions

PARAMETER		MIN	MAX	UNIT
INPUT CONDITIONS				
SR_I	Input Slew Rate	2	8.5	V/ns
OUTPUT CONDITIONS				
C_L	Output Load Capacitance	2	24	pF

6.11.5.11.2 SPI Controller Mode Timing Requirements

NO.	PARAMETER	DESCRIPTION	MIN	MAX	UNIT
Normal Mode					
SM4	$t_{su(MISO-SPICLK)}$	Setup time, spi_d[x] valid before spi_sclk active edge	2		ns
SM5	$t_{h(SPICLK-MISO)}$	Hold time, spi_d[x] valid after spi_sclk active edge	3		ns

Copyright © 2026 Texas Instruments Incorporated

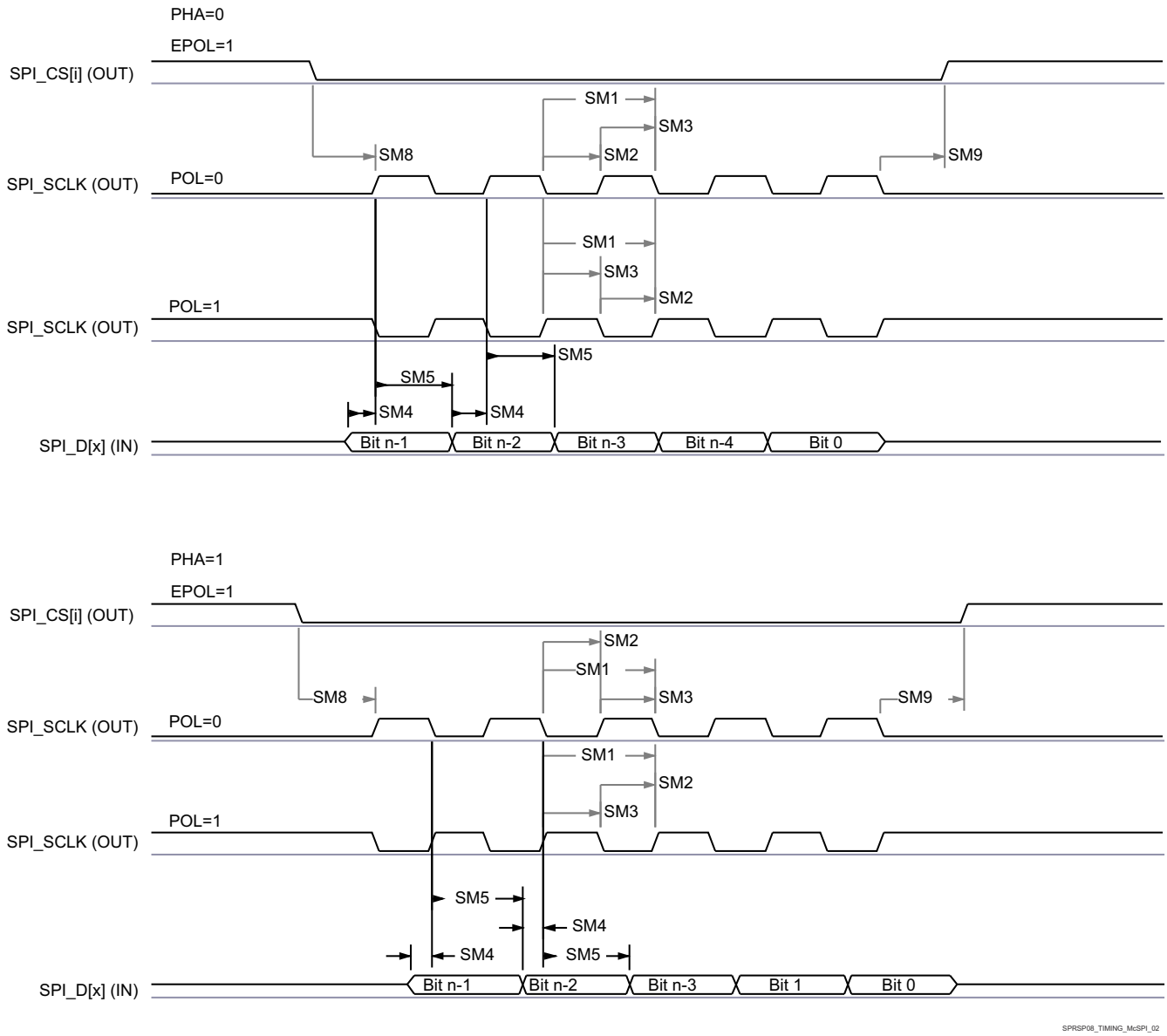

Figure 6-42. SPI Controller Mode Receive Timing

6.11.5.11.3 SPI Controller Mode Switching Characteristics (Clock Phase = 0)

NO.	PARAMETER	DESCRIPTION		MIN	MAX	UNIT
Normal Mode						
SM1	$t_{c(SPICLK)}$	Cycle time, spi_sclk		20		ns
SM2	$t_{w(SPICLKL)}$	Typical Pulse duration, spi_sclk low		–1 + 0.5P[1]		ns
SM3	$t_{w(SPICLKH)}$	Typical Pulse duration, spi_sclk high		–1 + 0.5P[1]		ns
SM6	$t_{d(SPICLK-SIMO)}$	Delay time, spi_sclk active edge to spi_d[x] transition		–3	2	ns
SM7	$t_{sk(CS-SIMO)}$	Delay time, spi_cs[x] active to spi_d[x] transition		5		ns
SM8	$t_{d(SPICLK-CS)}$	Delay time, spi_cs[x] active to spi_sclk first edge	PHA = 0	–4 + B[3]		ns
			PHA = 1	–4 + A[2]		ns
SM9	$t_{d(SPICLK-CS)}$	Delay time, spi_sclk last edge to spi_cs[x] inactive	PHA = 0	–4 + A[2]		ns
			PHA = 1	–4 + B[3]		ns

(1) P = SPICLK period in ns.
(2) When P = 20.8 ns, A = (TCS + 1) * TSPICLKREF, where TCS is a bit field of the SPI_CH(i)CONF register. When P > 20.8 ns, A = (TCS + 0.5) * Fratio * TSPICLKREF, where TCS is a bit field of the SPI_CH(i)CONF register.
(3) B = (TCS + .5) * TSPICLKREF, where TCS is a bit field of the SPI_CH(i)CONF register and Fratio = Even >= 2.

Copyright © 2026 Texas Instruments Incorporated

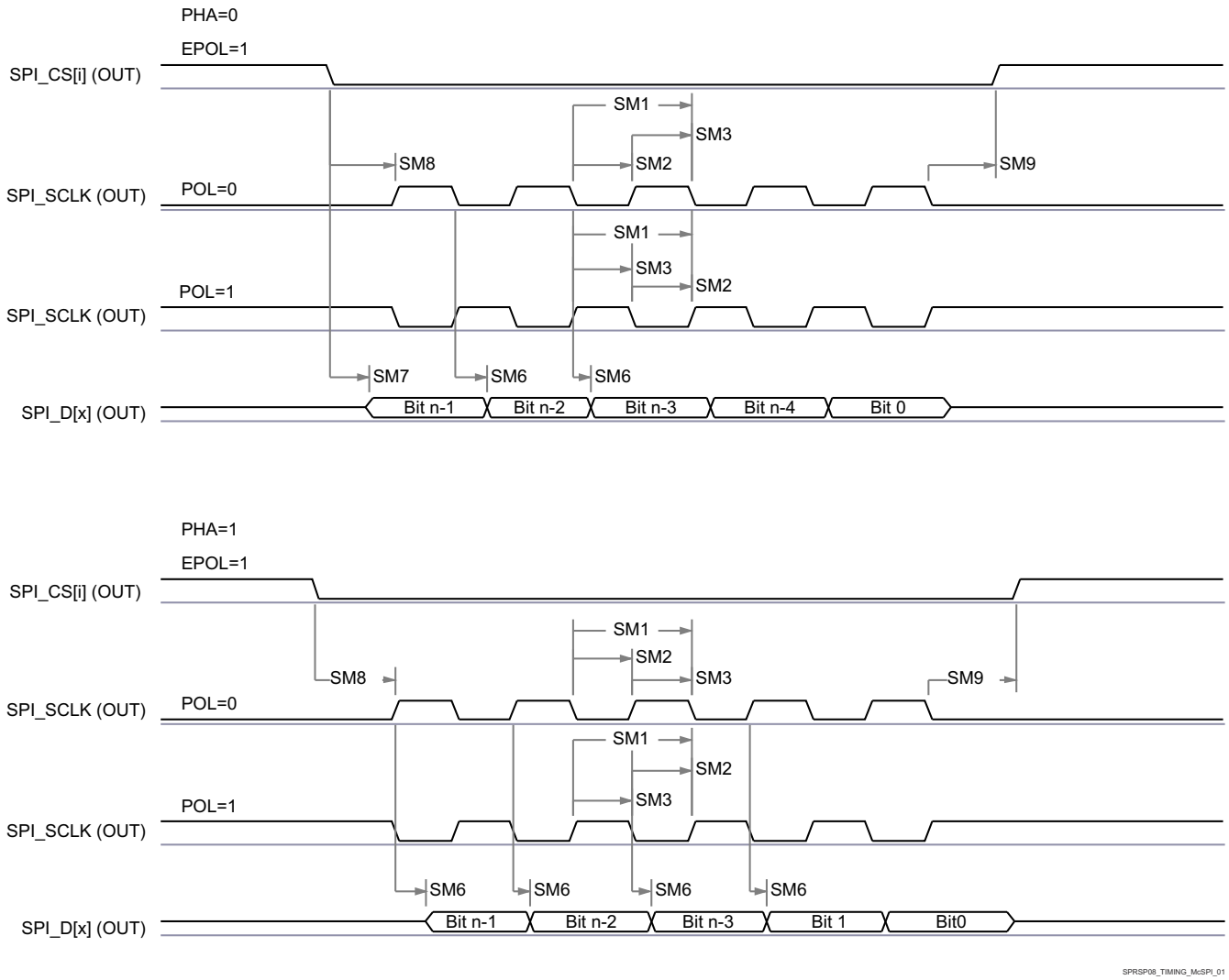

Figure 6-43. SPI Controller Mode Transmit Timing

6.11.5.11.4 SPI Peripheral Mode Timing Requirements

NO.	PARAMETER	DESCRIPTION	MIN	MAX	UNIT
SS1	$t_{c(SPICLK)}$	Cycle time, spi_sclk	40		ns
SS2	$t_{w(SPICLKL)}$	Typical Pulse duration, spi_sclk low	0.45 × P(1)		ns
SS3	$t_{w(SPICLKH)}$	Typical Pulse duration, spi_sclk high	0.45 × P(1)		ns
SS4	$t_{su(SIMO-SPICLK)}$	Setup time, spi_d[x] valid before spi_sclk active edge	5		ns
SS5	th(SPICLK-SIMO)	Hold time, spi_d[x] valid after spi_sclk active edge	5		ns
SS8	$t_{su(CS-SPICLK)}$	Setup time, spi_cs[x] valid before spi_sclk first edge	5		ns
SS9	$t_{h(SPICLK-CS)}$	Hold time, spi_cs[x] valid after spi_sclk last edge	5		ns

(1) P = SPICLK period.

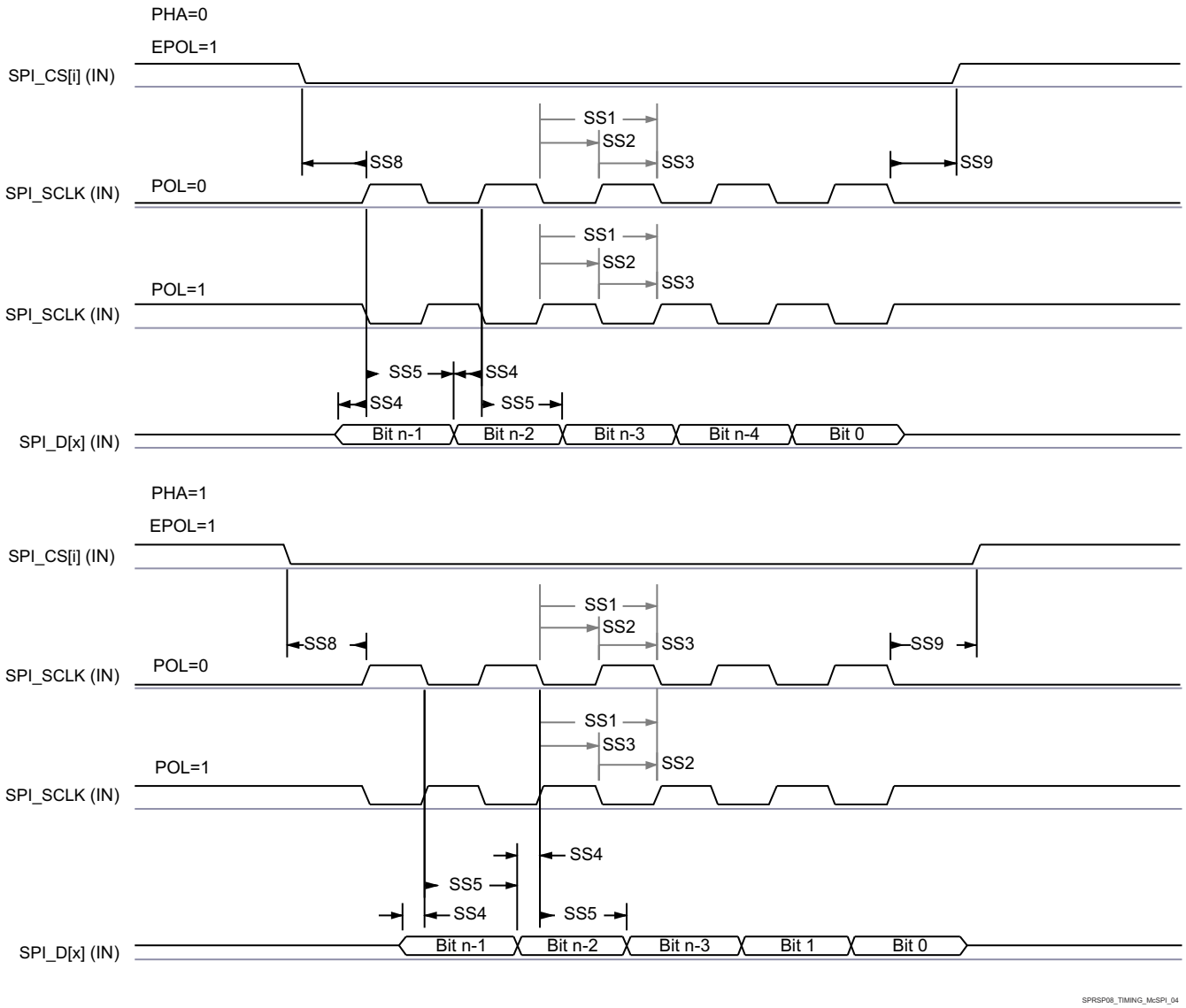

Figure 6-44. SPI Peripheral Mode Receive Timing

6.11.5.11.5 SPI Peripheral Mode Switching Characteristics

NO.	PARAMETER	DESCRIPTION	MIN	MAX	UNIT
Normal Mode					
SS6	$t_{d(SPICLK-SOMI)}$	Delay time, spi_sclk active edge to mcspi_somi transition	2	17.12	ns
SS7	$t_{sk(CS-SOMI)}$	Delay time, spi_cs[x] active edge to mcspi_somi transition	20.95		ns

Copyright © 2026 Texas Instruments Incorporated

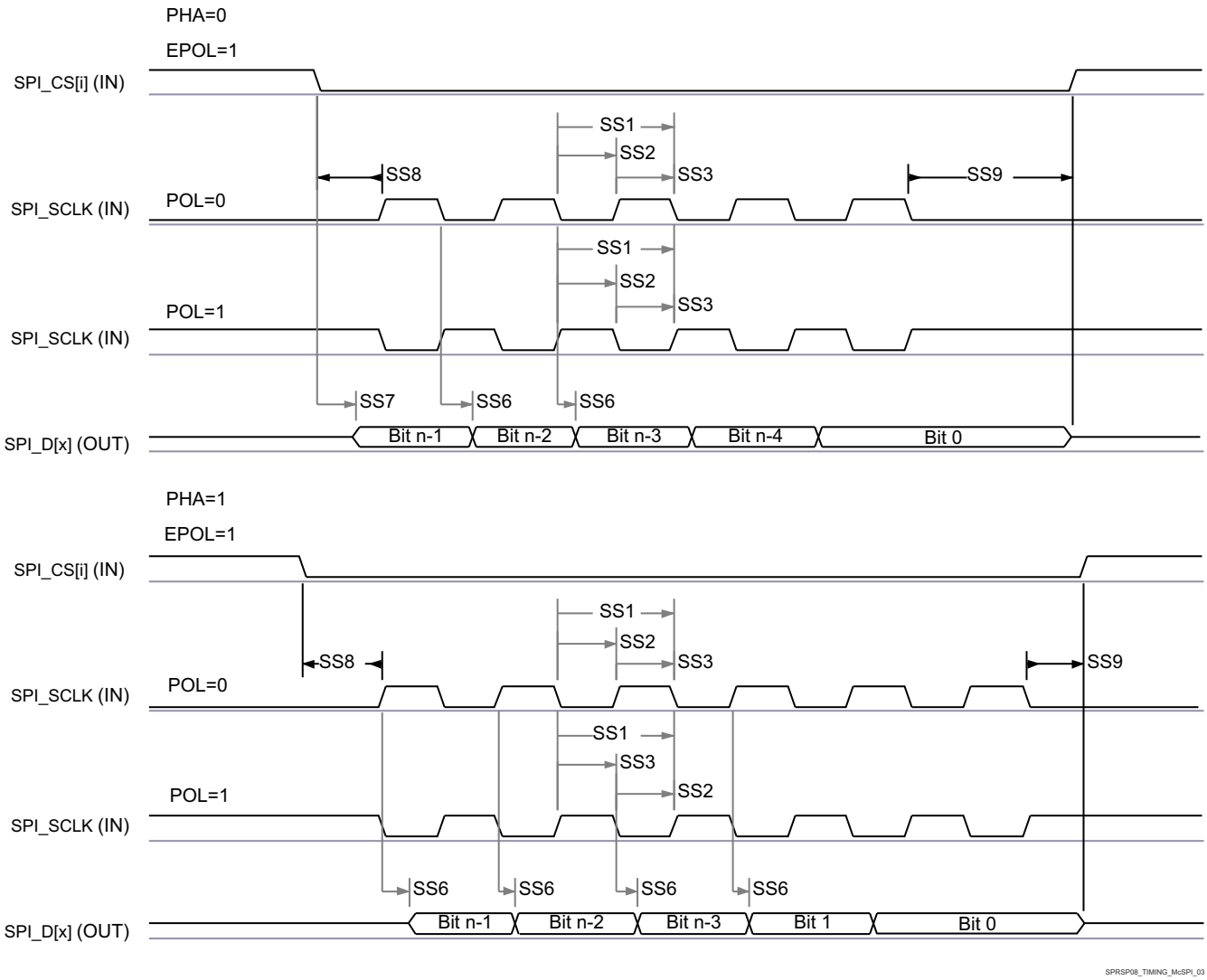

Figure 6-45. SPI Peripheral Mode Transmit Timing

6.11.5.12 Multi-Media Card/Secure Digital (MMCSD)

The MMCSD Host Controller provides an interface to embedded Multi-Media Card (MMC) and Secure Digital (SD)devices. The MMCSD Host Controller deals with MMC/SD protocol at transmission level, data packing, adding cyclic redundancy checks (CRCs), start/end bit insertion, and checking for syntactical correctness.

For more details about MMCSD interfaces, see the corresponding MMC subsection within *Signal Descriptions* and *Detailed Description* sections.

For more information, see *Multi-Media Card/Secure Digital (MMCSD) Interface* section in *Peripherals* chapter in the device TRM.

6.11.5.12.1 MMC Timing Conditions

PARAMETER		MODE	MIN	MAX	UNIT
INPUT CONDITIONS					
SR_I	Input Slew Rate	Default Speed	0.69	2.06	V/ns
		High Speed	0.69	2.06	V/ns
OUTPUT CONDITIONS					
C_L	Output Load Capacitance	Default Speed	1	10	pF
		High Speed	1	10	pF

6.11.5.12.2 MMC Timing Requirements - SD Card Default Speed Mode

NO.	PARAMETER	DESCRIPTION	MIN	MAX	UNIT
DS1	$t_{su(cmdV-clkH)}$	Setup time, MMC_CMD valid before MMC_CLK rising edge	2.15		ns
DS2	$t_{h(clkH-cmdV)}$	Hold time, MMC_CMD valid after MMC_CLK rising edge	19.67		ns
DS3	$t_{su(dV-clkH)}$	Setup time, MMC_DAT[3:0] valid before MMC_CLK rising edge	2.15		ns
DS4	$t_{h(clkH-dV)}$	Hold time, MMC_DAT[3:0] valid after MMC_CLK rising edge	19.67		ns

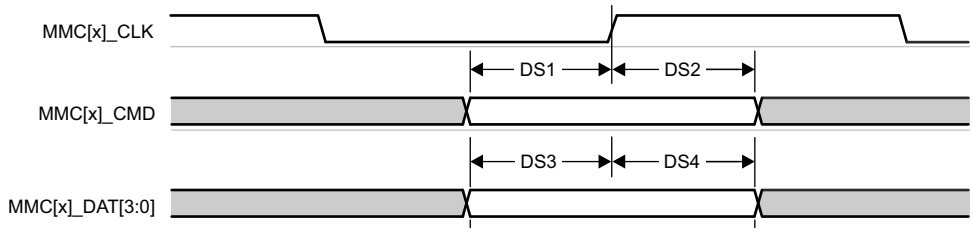

Figure 6-46. MMC – Default Speed – Receive Mode

6.11.5.12.3 MMC Switching Characteristics - SD Card Default Speed Mode

NO.	PARAMETER	DESCRIPTION	MIN	MAX	UNIT
	$f_{op(clk)}$	Operating frequency, MMC_CLK		25	MHz
DS5	$t_{c(clk)}$	Operating period, MMC_CLK		40	ns
DS6	$t_{w(clkH)}$	Pulse duration, MMC_CLK high	18.7		ns
DS7	$t_{w(clkL)}$	Pulse duration, MMC_CLK low	18.7		ns
DS8	$t_{d(clkL-cmdV)}$	Delay time, MMC_CLK falling edge to MMC_CMD transition	–14.1	14.1	ns
DS9	$t_{d(clkL-dV)}$	Delay time, MMC_CLK falling edge to MMC_DAT[3:0] transition	–14.1	14.1	ns

Copyright © 2026 Texas Instruments Incorporated

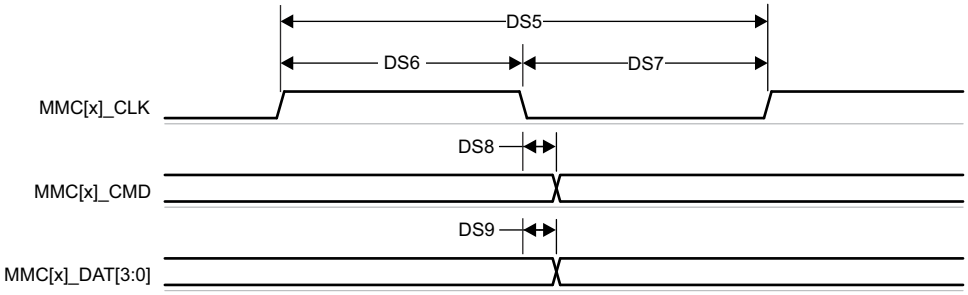

Figure 6-47. MMC – Default Speed – Transmit Mode

6.11.5.12.4 MMC Timing Requirements - SD Card High Speed Mode

NO.	PARAMETER	DESCRIPTION	MIN	MAX	UNIT
HS1	$t_{su(cmdV-clkH)}$	Setup time, MMC_CMD valid before MMC_CLK rising edge	2.15		ns
HS2	$t_{h(clkH-cmdV)}$	Hold time, MMC_CMD valid after MMC_CLK rising edge	2.67		ns
HS3	$t_{su(dV-clkH)}$	Setup time, MMC_DAT[3:0] valid before MMC_CLK rising edge	2.15		ns
HS4	$t_{h(clkH-dV)}$	Hold time, MMC_DAT[3:0] valid after MMC_CLK rising edge	2.67		ns

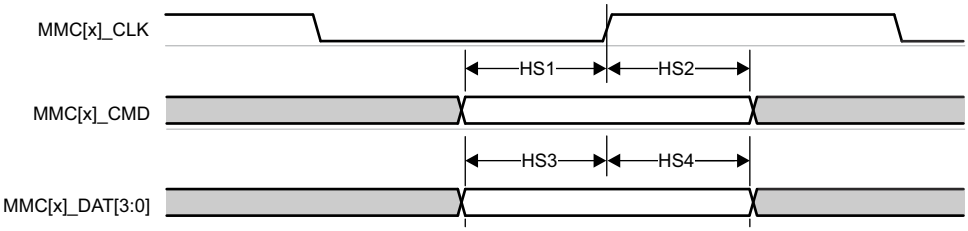

Figure 6-48. MMC – High Speed – Receive Mode

6.11.5.12.5 MMC Switching Characteristics - SD Card High Speed Mode

NO.	PARAMETER	DESCRIPTION	MIN	MAX	UNIT
	$f_{op(clk)}$	Operating frequency, MMC_CLK		50	MHz
HS5	$t_{c(clk)}$	Operating period, MMC_CLK		20	ns
HS6	$t_{w(clkH)}$	Pulse duration, MMC_CLK high	9.2		ns
HS7	$t_{w(clkL)}$	Pulse duration, MMC_CLK low	9.2		ns
HS8	$t_{d(clkL-cmdV)}$	Delay time, MMC_CLK falling edge to MMC_CMD transition	–7.35	3.35	ns
HS9	$t_{d(clkL-dV)}$	Delay time, MMC_CLK falling edge to MMC_DAT[3:0] transition	–7.35	3.35	ns

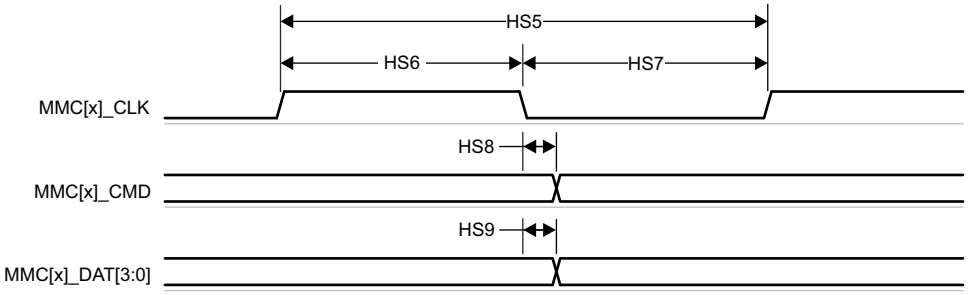

Figure 6-49. MMC – High Speed – Transmit Mode

Copyright © 2026 Texas Instruments Incorporated

6.11.5.13 Quad Serial Peripheral Interface (QSPI)

For more details about features and additional description information on the device Quad Serial Peripheral Interface, see the corresponding subsections within *Signal Descriptions* and *Detailed Description* sections.

For more information, see *Quad Serial Peripheral Interface (QSPI)* section in the device TRM.

6.11.5.13.1 QSPI Timing Conditions

PARAMETER		MIN	MAX	UNIT
INPUT CONDITIONS				
SR_I	Input Slew Rate	1	4	V/ns
OUTPUT CONDITIONS				
C_L	Output Load Capacitance	2	8	pF

6.11.5.13.2 QSPI Timing Requirements
(1)(2)

NO.	PARAMETER	DESCRIPTION	MODE	MIN	MAX	UNIT
Q12	$t_{su(D-RTCLK)}$	Setup time, d[3:0] valid before falling rtclk edge	Manual IO Timing Modes, Clock Mode 0	2.69		ns
	$t_{su(D-SCLK)}$	Setup time, d[3:0] valid before falling sclk edge	Manual IO Timing Modes, Clock Mode 3	5.7		ns
Q13	$t_{h(RTCLK-D)}$	Hold time, d[3:0] valid after falling rtclk edge	Manual IO Timing Modes, Clock Mode 0	–0.1		ns
	$t_{h(SCLK-D)}$	Hold time, d[3:0] valid after falling sclk edge	Manual IO Timing Modes, Clock Mode 3	0.1		ns

(1) Clock Modes 1 and 2 are not supported.
(2) The device captures data on the falling clock edge in Clock Mode 0 and 3, as opposed to the traditional rising clock edge. Although non-standard, the falling-edge-based setup and hold timings have been designed to be compatible with standard SPI devices that launch data on the falling edge in Clock Modes 0 and 3.

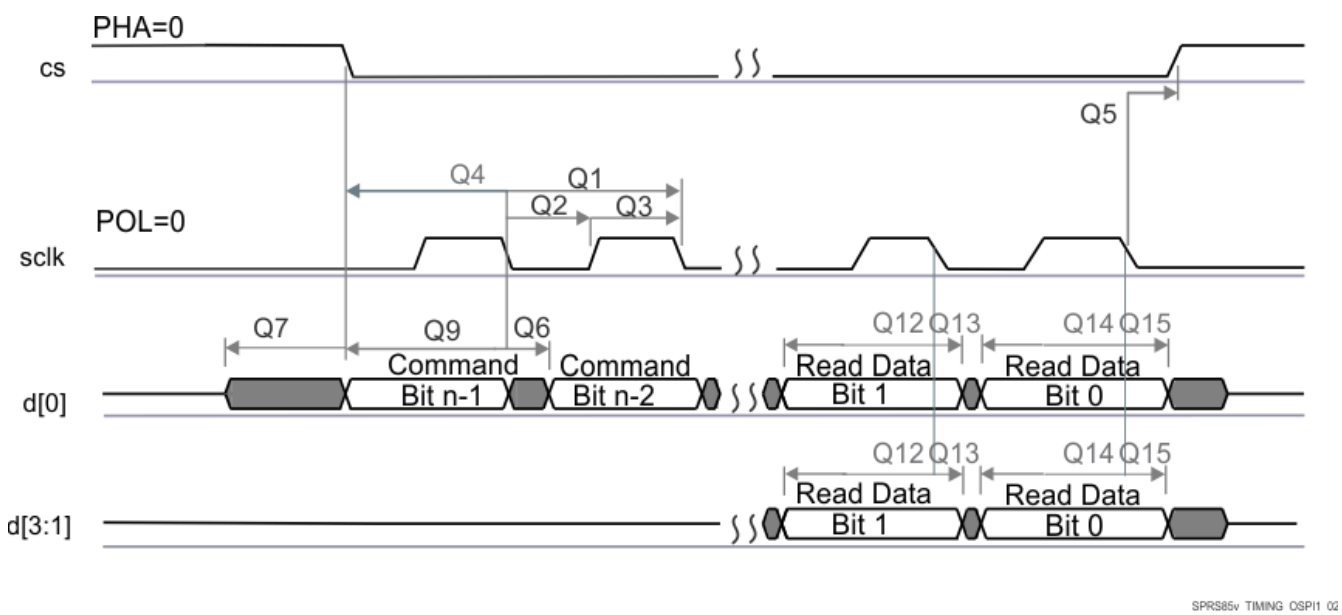

Figure 6-50. QSPI Timing Requirements

6.11.5.13.3 QSPI Switching Characteristics

NO.	PARAMETER	DESCRIPTION	MODE	MIN	MAX	UNIT
Q1	$t_{c(SCLK)}$	Cycle time, sclk	Manual IO Timing Modes, Clock Mode 0	10.41		ns
			Manual IO Timing Modes, Clock Mode 3	13.02		ns
Q2	$t_{w(SCLKL)}$	Pulse duration, sclk low	All	Y(4) × P(1) – 1		ns
Q3	$t_{w(SCLKH)}$	Pulse duration, sclk high	All	Y(4) × P(1) – 1		ns
Q4	$t_{d(CS-SCLK)}$	Delay time, sclk falling edge to cs active edge, CS1:0	Manual IO Timing Modes	–M(2) × P(1) – 2	–M(2) × P(1) + 2	ns
Q5	$t_{d(SCLK-CS)}$	Delay time, sclk falling edge to cs inactive edge, CS1:0	Manual IO Timing Modes	N(3) × P(1) – 2	N(3) × P(1) + 2	ns
Q6	$t_{d(SCLK-D0)}$	Delay time, sclk falling edge to d[0] transition	Manual IO Timing Modes	–1	2	ns
Q7	$t_{ena(CS-D0LZ)}$	Enable time, cs active edge to d[0] drive (lo-z)	All	–P(1) – 2	–P(1) + 2	ns
Q8	$t_{dis(CS-D0Z)}$	Disable time, cs active edge to d[0] tri-stated (hi-z)	All	–P(1) – 2	–P(1) + 2	ns
Q9	$t_{d(SCLK-D0)}$	Delay time, sclk first falling edge to first d[0] transition	Manual IO Timing Modes, PHA=0 Only	–P(1) – 1	–P(1) + 2	ns

(1) P = SCLK period
(2) M=QSPI_SPI_DC_REG.DDx + 1 when Clock Mode 0. M=QSPI_SPI_DC_REG.DDx when Clock Mode 3.
(3) N = 2 when Clock Mode 0. N = 3 when Clock Mode 3.
(4) Y = 0.5 when DCLK_DIV is 0 or ODD
Y = (DCLK_DIV/2)/(DCLK_DIV+1) when DCLK_DIV is EVEN

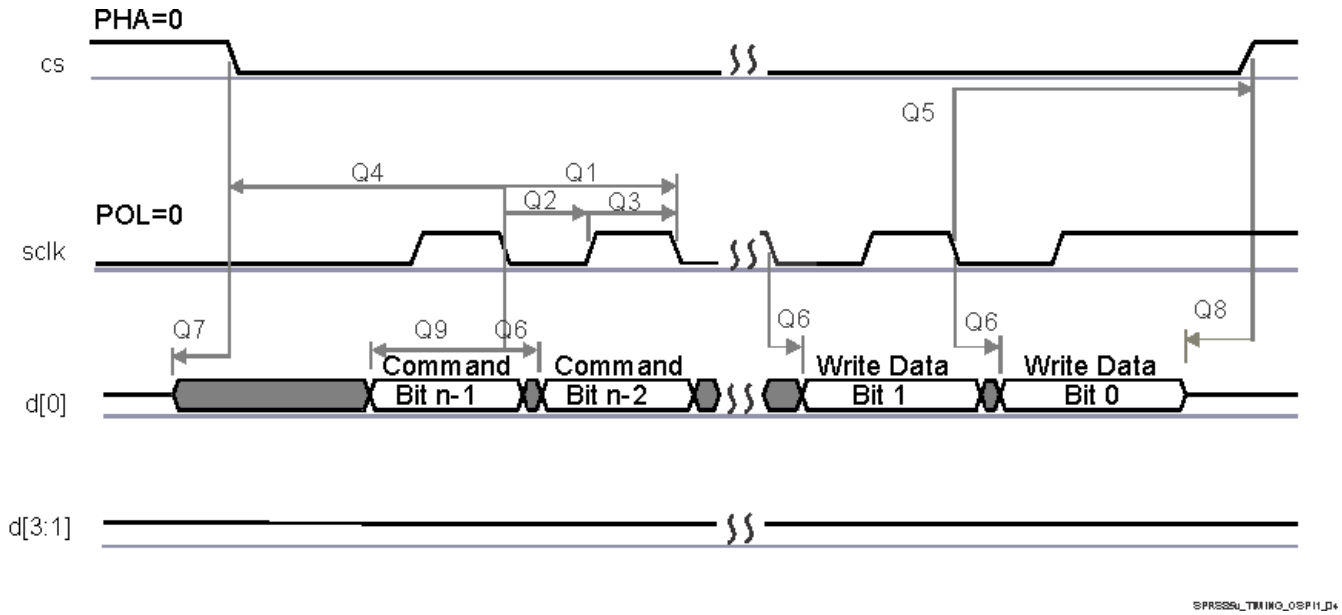

Figure 6-51. QSPI Switching Characteristics

Copyright © 2026 Texas Instruments Incorporated

6.11.5.14 Programmable Real-Time Unit and Industrial Communication Subsystem (PRU-ICSS)

The device has integrated a single Programmable Real-Time Unit and Industrial Communication Subsystem (PRU-ICSS0). The programmable nature of the PRU cores, along with their access to pins, events and all device resources, provides flexibility in implementing fast real-time responses, specialized data handling operations, custom peripheral interfaces, and in offloading tasks from the other processor cores in the device.

For more details about features and additional description information on the device PRU-ICSS, see the corresponding subsections within *Signal Descriptions* and *Detailed Description* sections.

Note

The PRU-ICSS0 supports an internal wrapper multiplexing that expands the device top-level multiplexing.

6.11.5.14.1 PRU-ICSS Programmable Real-Time Unit (PRU)

Note

The PRU-ICSS PRU signals have different functionality depending on the mode of operation. The signal naming in this section matches the naming used in the *PRU Module Interface* section in the device TRM.

6.11.5.14.1.1 PRU-ICSS PRU Timing Conditions

PARAMETER		MIN	MAX	UNIT
INPUT CONDITIONS				
SR_I	Input Slew Rate	1	3	V/ns
OUTPUT CONDITIONS				
C_L	Output Load Capacitance	2	30	pF

6.11.5.14.1.2 PRU-ICSS PRU Switching Characteristics - Direct Output Mode

NO.	PARAMETER	DESCRIPTION	MIN	MAX	UNIT
PRDO1	$t_{sk(PRU_GPO)}$	PRU_GPO (data out) skew		3	ns

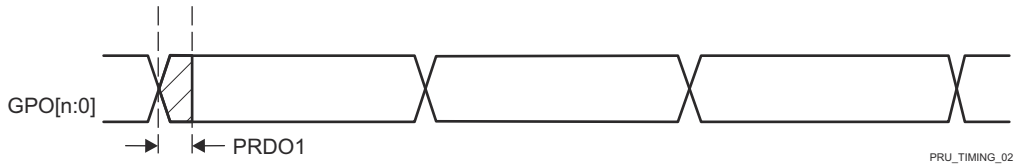

A. n in GPO[n:0] = 19.

Figure 6-52. PRU-ICSS PRU Direct Output Timing

6.11.5.14.1.3 PRU-ICSS PRU Timing Requirements - Parallel Capture Mode

NO.	PARAMETER	DESCRIPTION	MIN	MAX	UNIT
PRPC1	$t_{c(PRU_CLOCK)}$	Cycle time, PRU_CLOCK	20		ns
PRPC2	$t_{w(PRU_CLOCKL}$	Pulse duration, PRU_CLOCK Low	10		ns
PRPC3	$t_{w(PRU_CLOCKH)}$	Pulse duration, PRU_CLOCK High	10		ns
PRPC4	$t_{su(PRU_DATAIN-PRU_CLK)}$	Setup time, PRU_DATAIN valid before PRU_CLOCK active edge	4		ns

NO.	PARAMETER	DESCRIPTION	MIN	MAX	UNIT
PRPC5	$t_{th(PRU_CLOCK-PRU_DATAIN)}$	Hold time, PRU_DATAIN valid after PRU_CLOCK active edge	0		ns

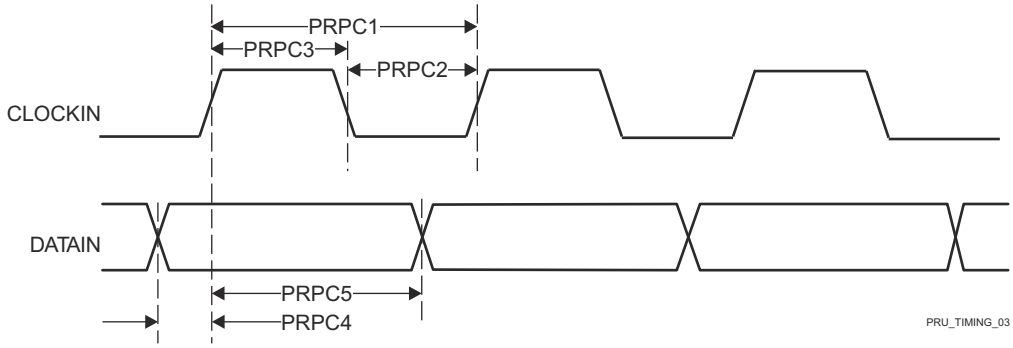

Figure 6-53. PRU-ICSS PRU Parallel Capture Timing Requirements – Rising Edge Mode

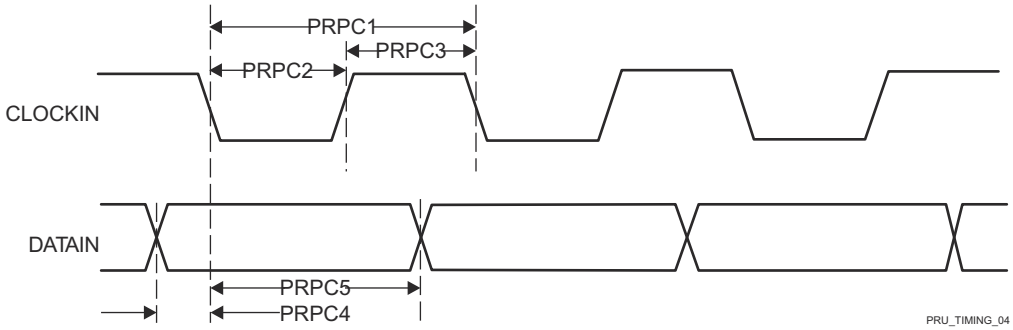

Figure 6-54. PRU-ICSS PRU Parallel Capture Timing Requirements – Falling Edge Mode

6.11.5.14.1.4 PRU-ICSS PRU Timing Requirements - Shift In Mode

NO.	PARAMETER	DESCRIPTION	MIN	MAX	UNIT
PRSI1	$t_{w(PRU_DATAINH)}$	Pulse duration, PRU_DATAIN High	2 + 2P[(1)]		ns
PRSI2	$t_{w(PRU_DATAINL)}$	Pulse duration, PRU_DATAIN Low	2 + 2P[(1)]		ns

(1) P = Internal shift in clock period, defined by PRU_GPI_DIV0 and PRU0_GPI_DIV1 bit fields in the GPCFGn register.

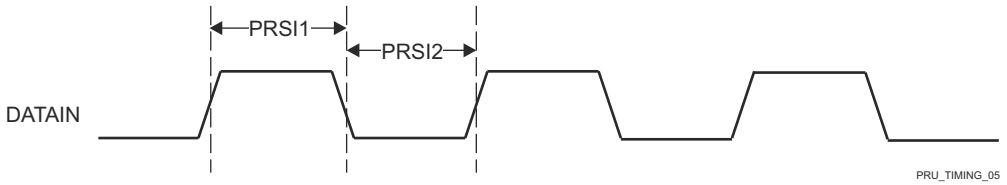

Figure 6-55. PRU-ICSS PRU Shift In Timing

6.11.5.14.1.5 PRU-ICSS PRU Switching Characteristics - Shift Out Mode

NO.	PARAMETER	DESCRIPTION	MIN	MAX	UNIT
PRSO1	$t_{c(PRU_CLOCKOUT)}$	Cycle time, PRU_CLOCKOUT	10		ns
PRSO2L	$t_{w(PRU_CLOCKOUTL)}$	Pulse duration, PRU_CLOCKOUT Low	–0.3 + 0.475 × P[(1)] × Z[(2)]		ns
PRSO2H	$t_{w(PRU_CLOCKOUTH)}$	Pulse duration, PRU_CLOCKOUT High	–0.3 + 0.475 × P[(1)] × Y[(3)]		ns

Copyright © 2026 Texas Instruments Incorporated

NO.	PARAMETER	DESCRIPTION	MIN	MAX	UNIT
PRSO3	$t_{d(PRU_CLOCKOUT-PRU_DATAOUT)}$	Delay time, PRU_CLOCKOUT to PRU_DATAOUT Valid	0	3	ns

(1) P = Software programmable shift out clock period, defined by PRU0_GP0_Div0 and PRU0_GPO_DIV1 bit fields in the GPCFGn register.

(2) The Z parameter is defined as follows:
If PRU0_GPI_DIV0 and PRU0_GPI_DIV1 are INTEGERS -or- if PRU0_GPI_DIV0 is a NON-INTEGER and PRU0_GPI_DIV1 is an EVEN INTEGER then,
Z equals (PRU0_GPI_DIV0 * PRU0_GPI_DIV1).
If PRU0_GPI_DIV0 is a NON-INTEGER and PRU0_GPI_DIV1 is an ODD INTEGER then,
Z equals (PRU0_GPI_DIV0 * PRU0_GPI_DIV1 + 0.5).
If PRU0_GPI_DIV0 is an INTEGER and PRU0_GPI_DIV1 is a NON-INTEGER then,
Z equals (PRU0_GPI_DIV0 * PRU0_GPI_DIV1 + 0.5 * PRU0_GPI_DIV0).
If PRU0_GPI_DIV0 and PRU0_GPI_DIV1 are NON-INTEGERS then,
Z equals (PRU0_GPI_DIV0 * PRU0_GPI_DIV1 + 0.25 * PRU0_GPI_DIV0).

(3) The Y parameter is defined as follows:
If PRU0_GPI_DIV0 and PRU0_GPI_DIV1 are INTEGERS -or- if PRU0_GPI_DIV0 is a NON-INTEGER and PRU0_GPI_DIV1 is an EVEN INTEGER then,
Y equals (PRU0_GPI_DIV0 * PRU0_GPI_DIV1).
If PRU0_GPI_DIV0 is a NON-INTEGER and PRU0_GPI_DIV1 is an ODD INTEGER then,
Y equals (PRU0_GPI_DIV0 * PRU0_GPI_DIV1 - 0.5).
If PRU0_GPI_DIV0 is an INTEGER and PRU0_GPI_DIV1 is a NON-INTEGER then,
Y equals (PRU0_GPI_DIV0 * PRU0_GPI_DIV1 - 0.5 * PRU0_GPI_DIV0).
If PRU0_GPI_DIV0 and PRU0_GPI_DIV1 are NON-INTEGERS then,
Y1 equals (PRU0_GPI_DIV0 * PRU0_GPI_DIV1 - 0.25 * PRU0_GPI_DIV0) and
Y2 equals (PRU0_GPI_DIV0 * PRU0_GPI_DIV1 + 0.25 * PRU0_GPI_DIV0), where Y1 is the first high pulse and Y2 is the second high pulse.

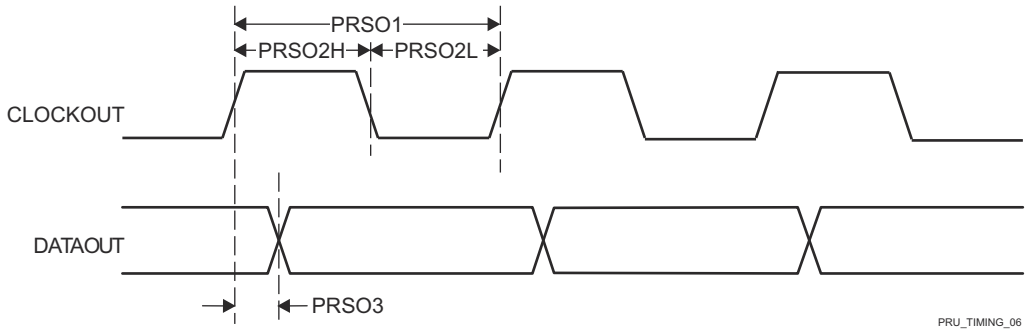

Figure 6-56. PRU-ICSS PRU Shift Out Timing

6.11.5.14.2 PRU-ICSS PRU Sigma Delta and Peripheral Interface

6.11.5.14.2.1 PRU-ICSS PRU Sigma Delta and Peripheral Interface Timing Conditions

PARAMETER		MIN	MAX	UNIT
INPUT CONDITIONS				
SR_I	Input Slew Rate	1	3	V/ns
OUTPUT CONDITIONS				
C_L	Output Load Capacitance	2	18	pF

6.11.5.14.2.2 PRU-ICSS PRU Timing Requirements - Sigma Delta Mode

NO.	PARAMETER	DESCRIPTION	MIN	MAX	UNIT
PRSD1	$t_{c(SD_CLK)}$	Cycle time, SD_CLK	40		ns
PRSD2L	$t_{w(SD_CLKL)}$	Pulse duration, SD_CLK Low	20		ns
PRSD2H	$t_{w(SD_CLKH)}$	Pulse duration, SD_CLK High	20		ns
PRSD3	$t_{su(SD_D\text{-}SDCLK)}$	Setup time, SD_D valid before SD_CLK active edge	10		ns
PRSD4	$t_{su(SDCLK\text{-}SD_D)}$	Hold time, SD_D valid after SD_CLK active edge	5		ns

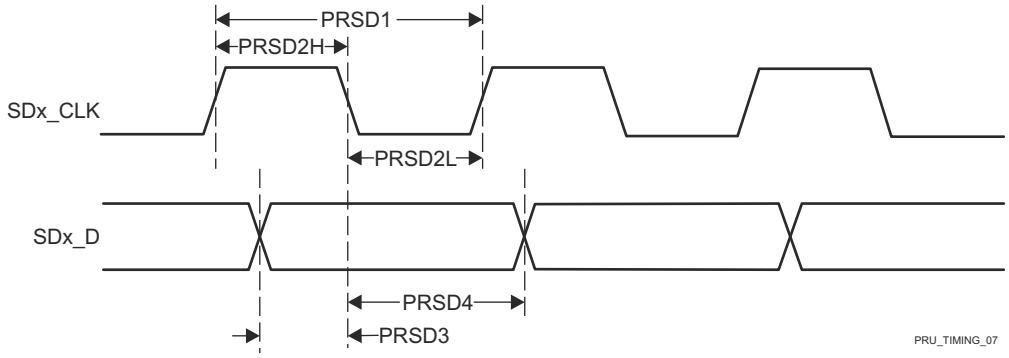

Figure 6-57. PRU-ICSS PRU SD_CLK Falling Active Edge

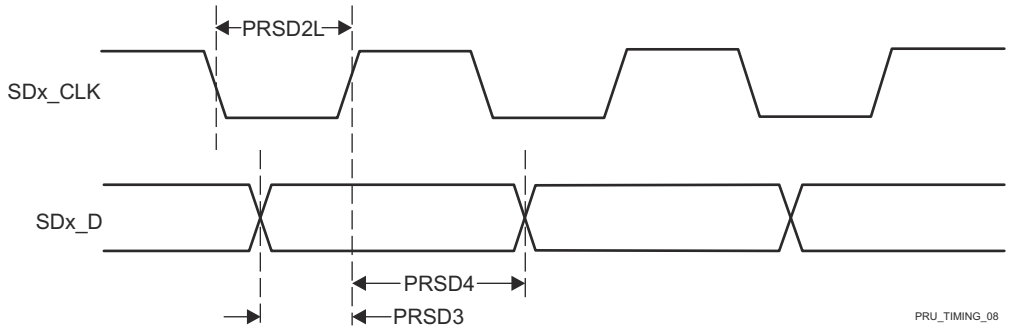

Figure 6-58. PRU-ICSS PRU SD_CLK Rising Active Edge

6.11.5.14.2.3 PRU-ICSS PRU Timing Requirements - Peripheral Interface Mode

NO.	PARAMETER	DESCRIPTION	MIN	MAX	UNIT
PRPIF1	$t_{w(PIF_DATA_INH)}$	Pulse duration, PIF_DATA_IN High	2 + 0.475 × (4 × P[(1)])		ns

Copyright © 2026 Texas Instruments Incorporated

NO.	PARAMETER	DESCRIPTION	MIN	MAX	UNIT
PRPIF2	$t_{w(PIF_DATA_INL)}$	Pulse duration, PIF_DATA_IN Low	2 + 0.475 × (4 × P[(1)])		ns

(1) P = 1x (or TX) clock period, defined by TX_DIV_FACTOR and TX_DIV_FACTOR_FRAC in the CFG_ED_P<n>_TXCFG register.

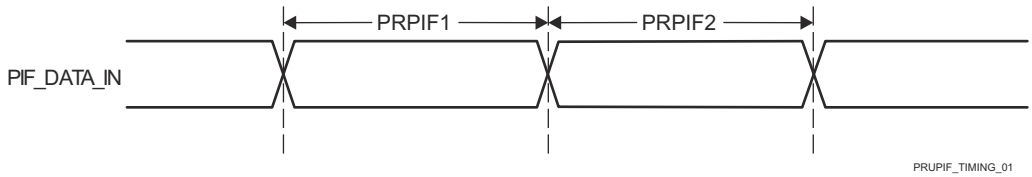

Figure 6-59. PRU-ICSS PRU Peripheral Interface Timing Requirements

6.11.5.14.2.4 PRU-ICSS PRU Switching Characteristics - Peripheral Interface Mode

NO.	PARAMETER	DESCRIPTION	MIN	MAX	UNIT
PRPIF3	$t_{c(PIF_CLK)}$	Cycle time, PIF_CLK	30		ns
PRPIF4	$t_{w(PIF_CLKH)}$	Pulse duration, PIF_CLK High	0.475P[(1)]		ns
PRPIF5	$t_{w(PIF_CLKL)}$	Pulse duration, PIF_CLK Low	0.475P[(1)]		ns
PRPIF6	$t_{d(PIF_CLK-PIF_DATA_OUT)}$	Delay time, PIF_CLK fall to PIF_DATA_OUT	–5	5	ns
PRPIF7	$t_{d(PIF_CLK-PIF_DATA_EN)}$	Delay time, PIF_CLK fall to PIF_DATA_EN	–5	5	ns

(1) P = 1x (or TX) clock period, defined by TX_DIV_FACTOR and TX_DIV_FACTOR_FRAC in the CFG_ED_P<n>_TXCFG register.

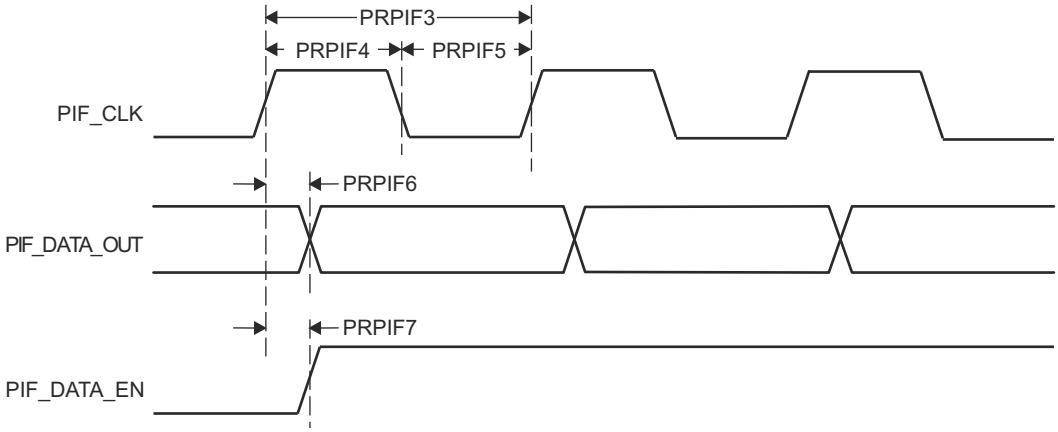

Figure 6-60. PRU-ICSS PRU Peripheral Interface Switching Characteristics

6.11.5.14.3 PRU-ICSS Pulse Width Modulation (PWM)

6.11.5.14.3.1 PRU-ICSS PWM Timing Conditions

PARAMETER		MIN	MAX	UNIT
INPUT CONDITIONS				
SR_I	Input Slew Rate	1	4	V/ns
OUTPUT CONDITIONS				
C_L	Output Load Capacitance	2	7	pF

6.11.5.14.3.2 PRU-ICSS PWM Switching Characteristics

NO.	PARAMETER	DESCRIPTION	MIN	MAX	UNIT
PRPWM1	$t_{sk(PWM_A/B)}$	PWM_A/B skew		0	ns

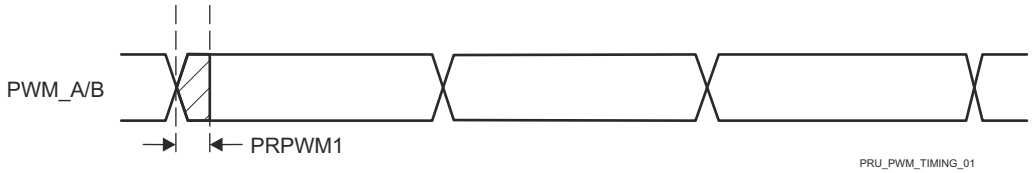

Figure 6-61. PRU-ICSS PWM Timing

Copyright © 2026 Texas Instruments Incorporated

6.11.5.14.4 PRU-ICSS Industrial Ethernet Peripheral (IEP)

6.11.5.14.4.1 PRU-ICSS IEP Timing Conditions

PARAMETER		MIN	MAX	UNIT
INPUT CONDITIONS				
SR_I	Input Slew Rate	1	3	V/ns
OUTPUT CONDITIONS				
C_L	Output Load Capacitance	1	7	pF

6.11.5.14.4.2 PRU-ICSS IEP Timing Requirements - Input Validated with SYNCx

NO.	PARAMETER	DESCRIPTION	MIN	MAX	UNIT
PRIEP1	$t_{w(EDC_SYNCx_OUTL)}$	Pulse duration, EDC_SYNCx_OUT Low	–2 + 20P[(1)]		ns
PRIEP2	$t_{w(EDC_SYNCx_OUTH)}$	Pulse duration, EDC_SYNCx_OUT High	–2 + 20P[(1)]		ns
PRIEP3	$t_{su(EDIO_DATA_IN-EDC_SYNCx_OUT}$	Setup time, EDIO_DATA_IN valid before EDC_SYNCx_OUT active edge	20		ns
PRIEP4	$t_{h(EDC_SYNCx_OUT-EDIO_DATA_IN)}$	Hold time, EDIO_DATA_IN valid after EDC_SYNCx_OUT active edge	20		ns

(1) P = PRU-ICSS IEP clock source period.

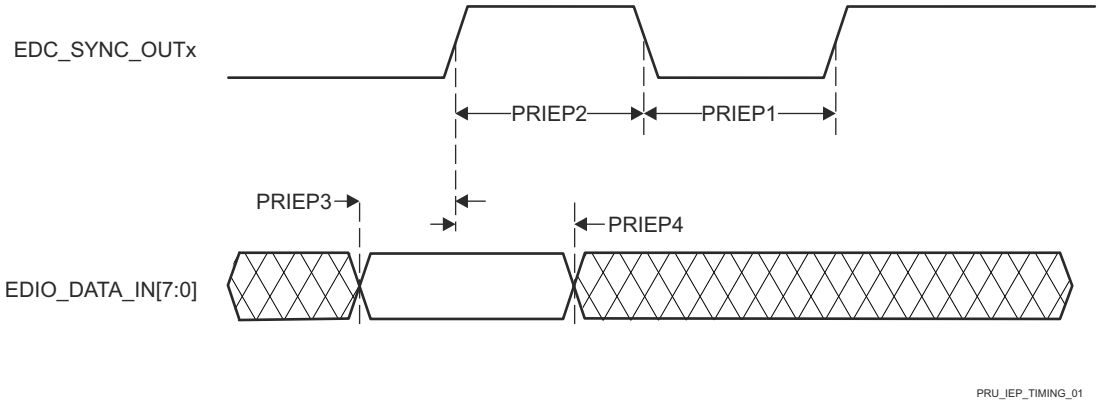

Figure 6-62. PRU-ICSS IEP SYNC Timing Requirements

6.11.5.14.4.3 PRU-ICSS IEP Timing Requirements - Digital IOs

NO.	PARAMETER	DESCRIPTION	MIN	MAX	UNIT
IEPIO1	$t_{w(EDIO_OUTVALIDL)}$	Pulse duration, EDIO_OUTVALID Low	–2 + 14P[(1)]		ns
IEPIO2	$t_{w(EDIO_OUTVALIDH)}$	Pulse duration, EDIO_OUTVALID High	–2 + 32P[(1)]		ns
IEPIO3	$t_{d(EDIO_OUTVALID-EDIO_DATA_OUT)}$	Delay time, EDIO_OUTVALID to EDIO_DATA OUT	0	18P[(1)]	ns
IEPIO4	$t_{sk(EDIO_DATA_OUT)}$	EDIO_DATA_OUT skew	6		ns

(1) P = PRU-ICSS IEP clock source period.

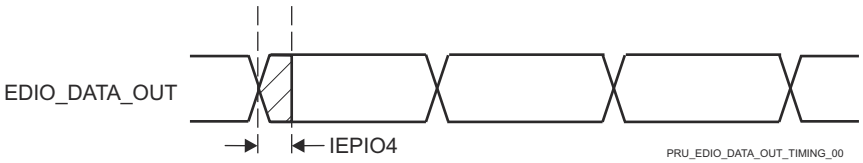

Figure 6-63. PRU-ICSS IEP Digital IOs Timing Requirements

6.11.5.14.4.4 PRU-ICSS IEP Timing Requirements - LATCHx_IN

NO.	PARAMETER	DESCRIPTION	MIN	MAX	UNIT
PRLA1	$t_{w(EDC_LATCHx_INL)}$	Pulse duration, EDC_LATCHx_IN Low	2 + 3P[(1)]		ns
PRLA2	$t_{w(EDC_LATCHx_INH)}$	Pulse duration, EDC_LATCHx_IN High	2 + 3P[(1)]		ns

(1) P = PRU-ICSS IEP clock source period.

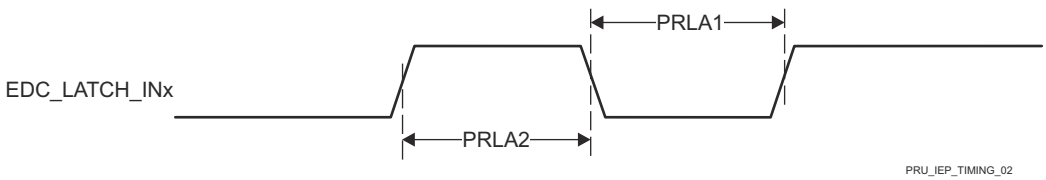

Figure 6-64. PRU-ICSS IEP LATCH_INx Timing Requirements

Copyright © 2026 Texas Instruments Incorporated

6.11.5.14.5 PRU-ICSS Universal Asynchronous Receiver Transmitter (UART)

6.11.5.14.5.1 PRU-ICSS UART Timing Conditions

PARAMETER		MIN	MAX	UNIT
INPUT CONDITIONS				
SR_I	Input Slew Rate	0.01	0.33	V/ns
OUTPUT CONDITIONS				
C_L	Output Load Capacitance	1	30	pF

6.11.5.14.5.2 PRU-ICSS UART Timing Requirements

NO.	PARAMETER	DESCRIPTION	MIN	MAX	UNIT
PRUR1H	$t_{w(RXH)}$	Pulse duration, Receive start, stop, data bit High	U(1)		ns
PRUR1L	$t_{w(RXL)}$	Pulse duration, Receive start, stop, data bit Low	–2 + U(1)		ns

(1) U = UART baud time = 1/programmed baud rate.

6.11.5.14.5.3 PRU-ICSS UART Switching Characteristics

NO.	PARAMETER	DESCRIPTION	MIN	MAX	UNIT
PRUR2	$f_{(baud)}$	Maximum programmable baud rate	U(1)		ns
PRUR3H	$t_{w(TXH)}$	Pulse duration, Transmit start, stop, data bit High	–2 + U(1)		ns

(1) U = UART baud time = 1/programmed baud rate.

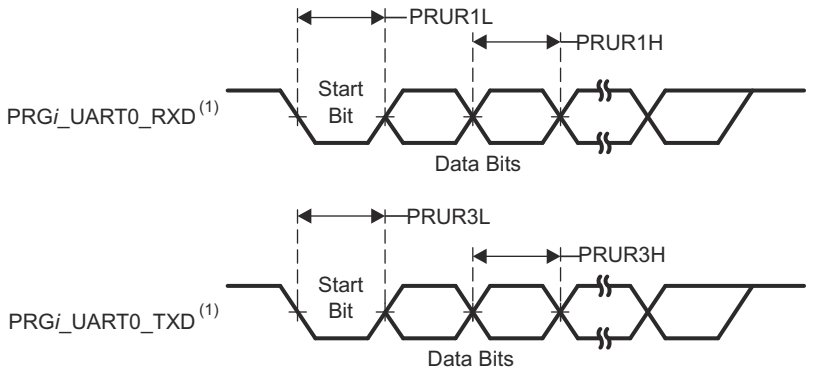

(1) i in PRG*i*_UART0_RXD and PRG*i*_UART0_TXD = 0, 1 or 2

Figure 6-65. PRU-ICSS UART Timing Requirements and Switching Characteristics

6.11.5.14.6 PRU-ICSS Enhanced Capture Peripheral (ECAP)

6.11.5.14.6.1 PRU-ICSS ECAP Timing Conditions

PARAMETER		MIN	MAX	UNIT
INPUT CONDITIONS				
SR_I	Input Slew Rate	1	3	V/ns
OUTPUT CONDITIONS				
C_L	Output Load Capacitance	2	7	pF

6.11.5.14.6.2 PRU-ICSS ECAP Timing Requirements

NO.	PARAMETER	DESCRIPTION	MIN	MAX	UNIT
PREP1	$t_{w(CAP)}$	Pulse duration, Capture input (asynchronous)	2 + 2P(1)		ns
PREP2	$t_{w(SYNCI)}$	Pulse duration, Sync input (asynchronous)	2 + 2P(1)		ns

(1) P = core_clk period

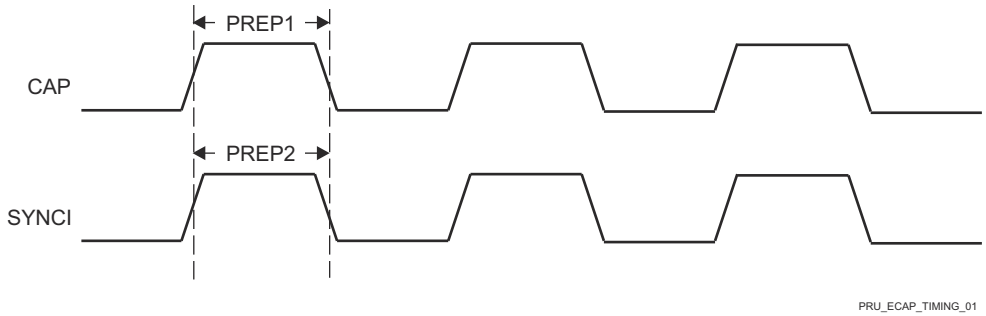

Figure 6-66. PRU-ICSS ECAP Timing

6.11.5.14.6.3 PRU-ICSS ECAP Switching Characteristics

NO.	PARAMETER	DESCRIPTION	MIN	MAX	UNIT
PREP3	$t_{w(APWM)}$	Pulse duration, Auxiliary PWM (APWM) output high/low	2P(1)		ns
PREP4	$t_{w(SYNCO)}$	Pulse duration, Sync output (asynchronous)	P(1)		ns

(1) P = core_clk period

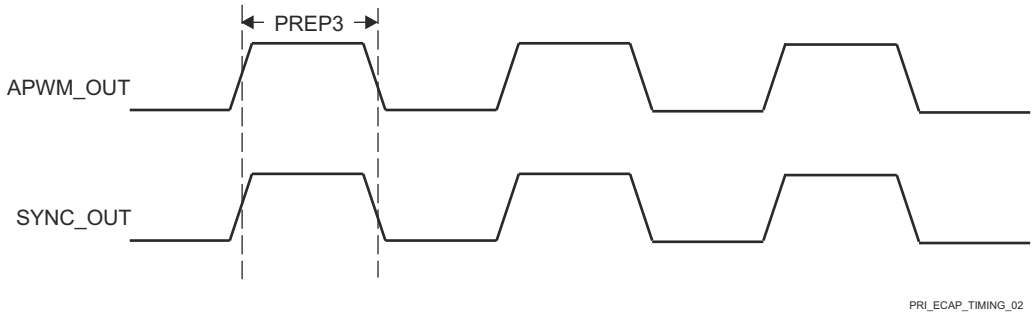

Figure 6-67. PRU-ICSS ECAP Switching Characteristics

Copyright © 2026 Texas Instruments Incorporated

6.11.5.14.7 PRU-ICSS MDIO and MII

6.11.5.14.7.1 PRU-ICSS MDIO Timing

6.11.5.14.7.1.1 PRU-ICSS MDIO Timing Conditions

PARAMETER		MIN	MAX	UNIT
INPUT CONDITIONS				
SR_I	Input Slew Rate	0.9	3.6	V/ns
OUTPUT CONDITIONS				
C_L	Output Load Capacitance	10	470	pF

6.11.5.14.7.1.2 PRU-ICSS MDIO Timing Requirements

NO.	PARAMETER	DESCRIPTION	MIN	MAX	UNIT
MDIO1	$t_{su(MDIO-MDC)}$	Setup time, MDIO[x]_MDIO valid before MDIO[x]_MDC high	90		ns
MDIO2	$t_{h(MDC-MDIO)}$	Hold time, MDIO[x]_MDIO valid from MDIO[x]_MDC high	0		ns

6.11.5.14.7.1.3 PRU-ICSS MDIO Switching Characteristics

NO.	PARAMETER	DESCRIPTION	MIN	MAX	UNIT
MDIO3	$t_{c(MDC)}$	Cycle time, MDIO[x]_MDC	400		ns
MDIO4	$t_{w(MDCH)}$	Pulse duration, MDIO[x]_MDC high	160		ns
MDIO5	$t_{w(MDCL)}$	Pulse duration, MDIO[x]_MDC low	160		ns
MDIO7	$t_{d(MDC-MDIO)}$	Delay time, MDIO[x]_MDC low to MDIO[x]_MDIO valid	–150	150	ns

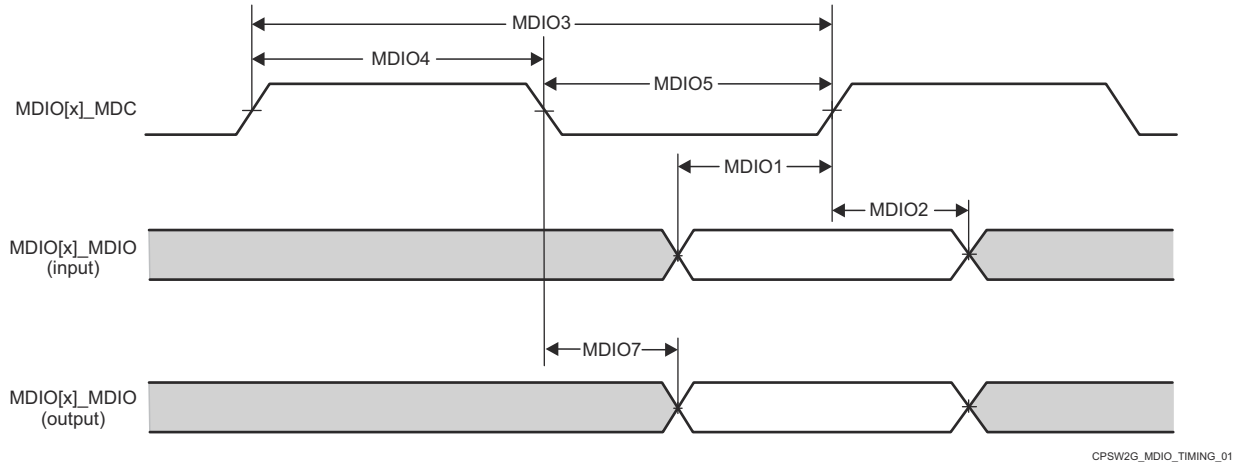

Figure 6-68. PRU-ICSS MDIO Timing Requirements and Switching Characteristics

6.11.5.14.7.2 PRU-ICSS MII Timing

6.11.5.14.7.2.1 PRU-ICSS MII Timing Conditions

PARAMETER		MIN	MAX	UNIT
INPUT CONDITIONS				
SR_I	Input Slew Rate	0.9	3.6	V/ns
OUTPUT CONDITIONS				

PARAMETER		MIN	MAX	UNIT
C_L	Output Load Capacitance	2	20	pF

6.11.5.14.7.2.2 PRU-ICSS MII Timing Requirements - MII[x]_RX_CLK

NO.	PARAMETER	DESCRIPTION	MODE	MIN	MAX	UNIT
PMIR1	$t_{c(RX_CLK)}$	Cycle time, MII[x]_RX_CLK	10Mbps	399.96	400.04	ns
			100Mbps	39.996	40.004	ns
PMIR2	$t_{w(RX_CLKH)}$	Pulse duration, MII[x]_RX_CLK high	10Mbps	140	260	ns
			100Mbps	14	26	ns
PMIR3	$t_{w(RX_CLKL)}$	Pulse duration, MII[x]_RX_CLK low	10Mbps	140	260	ns
			100Mbps	14	26	ns

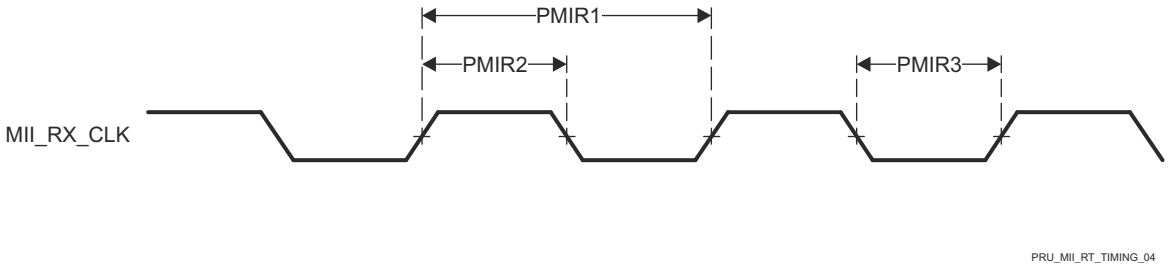

Figure 6-69. PRU-ICSS MII[x]_RX_CLK Timing

6.11.5.14.7.2.3 PRU-ICSS MII Timing Requirements - MII[x]_RXD[3:0], MII[x]_RX_DV, and MII[x]_RX_ER

NO.	PARAMETER	DESCRIPTION	MODE	MIN	MAX	UNIT
PMIR4	$t_{su(RXD\text{-}RX_CLK)}$	Setup time, MII[x]_RXD[3:0] valid before MII[x]_RX_CLK	10 Mbps	8		ns
	$t_{su(RX_DV\text{-}RX_CLK)}$	Setup time, MII[x]_RX_DV valid before MII[x]_RX_CLK		8		ns
	$t_{su(RX_ER\text{-}RX_CLK)}$	Setup time, MII[x]_RX_ER valid before MII[x]_RX_CLK		8		ns
	$t_{su(RXD\text{-}RX_CLK)}$	Setup time, MII[x]_RXD[3:0] valid before MII[x]_RX_CLK	100 Mbps	8		ns
	$t_{su(RX_DV\text{-}RX_CLK)}$	Setup time, MII[x]_RX_DV valid before MII[x]_RX_CLK		8		ns
	$t_{su(RX_ER\text{-}RX_CLK)}$	Setup time, MII[x]_RX_ER valid before MII[x]_RX_CLK		8		ns
PMIR5	$t_{h(RX_CLK\text{-}RXD)}$	Hold time, MII[x]_RXD[3:0] valid after MII[x]_RX_CLK	10 Mbps	8		ns
	$t_{h(RX_CLK\text{-}RX_DV)}$	Hold time, MII[x]_RX_DV valid after MII[x]_RX_CLK		8		ns
	$t_{h(RX_CLK\text{-}RX_ER)}$	Hold time, MII[x]_RX_ER valid after MII[x]_RX_CLK		8		ns
	$t_{h(RX_CLK\text{-}RXD)}$	Hold time, MII[x]_RXD[3:0] valid after MII[x]_RX_CLK	100 Mbps	8		ns
	$t_{h(RX_CLK\text{-}RX_DV)}$	Hold time, MII[x]_RX_DV valid after MII[x]_RX_CLK		8		ns
	$t_{h(RX_CLK\text{-}RX_ER)}$	Hold time, MII[x]_RX_ER valid after MII[x]_RX_CLK		8		ns

Copyright © 2026 Texas Instruments Incorporated

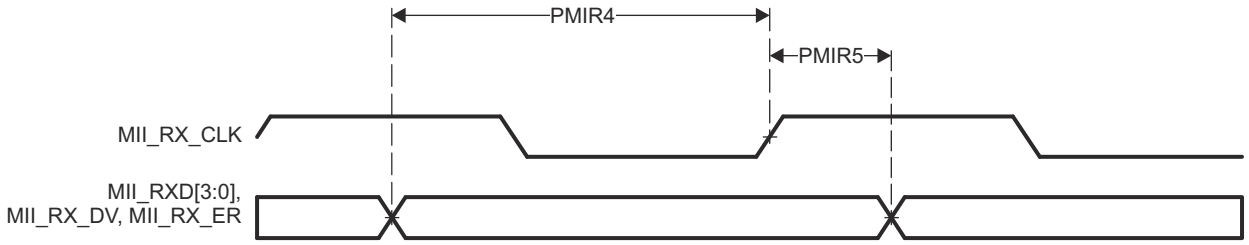

Figure 6-70. PRU-ICSS MII[x]_RXD[3:0], MII[x]_RX_DV, and MII[x]_RX_ER Timing

6.11.5.14.7.2.4 PRU-ICSS MII Switching Characteristics - MII[x]_TX_CLK

NO.	PARAMETER	DESCRIPTION	MODE	MIN	MAX	UNIT
PMIT1	$t_{c(TX_CLK)}$	Cycle time, MII[x]_TX_CLK	10 Mbps	399.96	400.04	ns
			100 Mbps	39.996	40.004	ns
PMIT2	$t_{w(TX_CLKH)}$	Pulse duration, MII[x]_TX_CLK high	10 Mbps	140	260	ns
			100 Mbps	14	26	ns
PMIT3	$t_{w(TX_CLKL)}$	Pulse duration, MII[x]_TX_CLK low	10 Mbps	140	260	ns
			100 Mbps	14	26	ns

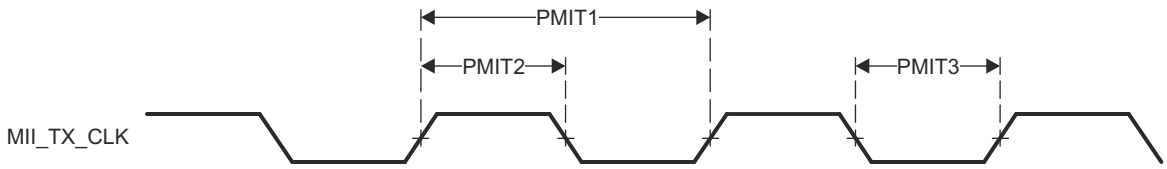

Figure 6-71. PRU-ICSS MII[x]_TX_CLK Timing

6.11.5.14.7.2.5 PRU-ICSS MII Switching Characteristics - MII[x]_TXD[3:0] and MII[x]_TXEN

NO.	PARAMETER	DESCRIPTION	MODE	MIN	MAX	UNIT
PMIT4	$t_{d(TX_CLK\text{-}TXD)}$	Delay time, MII[x]_TX_CLK high to MII[x]_TXD[3:0] valid	10 Mbps	0	25	ns
	$t_{d(TX_CLK\text{-}TX_EN)}$	Delay time, MII[x]_TX_CLK high to MII[x]_TX_EN valid		0	25	ns
	$t_{d(TX_CLK\text{-}TXD)}$	Delay time, MII[x]_TX_CLK high to MII[x]_TXD[3:0] valid	100 Mbps	0	25	ns
	$t_{d(TX_CLK\text{-}TX_EN)}$	Delay time, MII[x]_TX_CLK high to MII[x]_TX_EN valid		0	25	ns

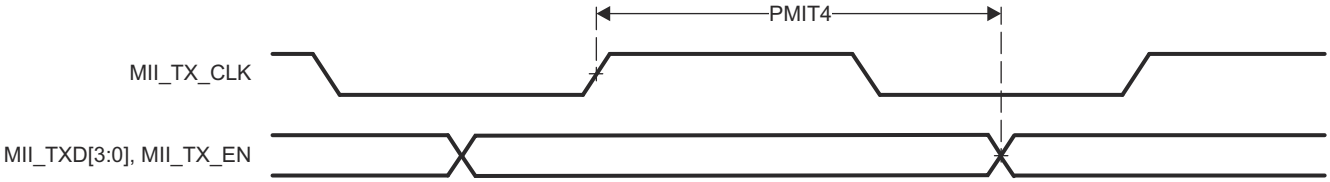

Figure 6-72. PRU-ICSS MII[x]_TXD[3:0], MII[x]_TX_EN Timing

6.11.5.15 Sigma Delta Filter Module (SDFM)

For more information, see *Sigma Delta Filter Module* section in the device TRM.

6.11.5.15.1 SDFM Timing Conditions

PARAMETER		MODE	MIN	MAX	UNIT
INPUT CONDITIONS					
SR_I	Input Slew Rate	Mode 0	0.5	5	V/ns

6.11.5.15.2 SDFM Switching Characteristics

NO.	PARAMETER	DESCRIPTION	MODE	MIN	MAX	UNIT
M0-1	$t_{c(SDC)}$	Cycle time, SDx_Cy	Mode 0	5P[(1)]	256P[(1)]	ns
M0-2	$t_{w(SDCHL)}$	Pulse duration, SDx_Cy (high/low)	Mode 0	2P[(1)]		ns
M0-3	$t_{sh(SDDV-SDCH)}$	Setup time, SDx_Dy valid before SDx_Cy high	Mode 0	2P[(1)]		ns
M0-4	$t_{h(SDCH-SDD)}$	Hold time, SDx_Dy wait after SDx_Cy high	Mode 0	2P[(1)]		ns

(1) P = SYSCLK period in ns.

Copyright © 2026 Texas Instruments Incorporated

6.11.5.16 Universal Asynchronous Receiver/Transmitter (UART)

For more details about features and additional description information on the device Universal Asynchronous Receiver Transmitter, see the corresponding subsections within *Signal Descriptions* and *Detailed Description* sections.

For more information, see *Universal Asynchronous Receiver/Transmitter (UART)* section in the device TRM.

6.11.5.16.1 UART Timing Conditions

PARAMETER		MIN	MAX	UNIT
INPUT CONDITIONS				
SR_I	Input Slew Rate	0.5	5	V/ns
OUTPUT CONDITIONS				
C_L	Output Load Capacitance	1	30	pF

6.11.5.16.2 UART Timing Requirements

NO.	PARAMETER	DESCRIPTION	MIN	MAX	UNIT
4	$t_{w(RX)}$	Pulse width, receive data bit, high or low	0.95U(1)	1.05U(1)	ns
5	$t_{w(CTS)}$	Pulse width, receive start bit, high or low	0.95U(1)		ns

(1) U = UART baud time = 1 / Programmed baud rate.

6.11.5.16.3 UART Switching Characteristics

NO.	PARAMETER	DESCRIPTION	MODE	MIN	MAX	UNIT
	$f_{(baud)}$	Programmable baud rate	15 pF		12	MHz
			30 pF		0.115	
2	$t_{w(TX)}$	Pulse width, transmit data bit, high or low		U(1) – 2.2	U(1) + 2.2	ns
3	$t_{w(RTS)}$	Pulse width, transmit start bit, high or low		U(1) – 2.2		ns
1	$t_{d(CTS-TX)}$	Delay time, receive CTS bit to transmit data		30		ns

(1) U = UART baud time = 1 / Programmed baud rate.

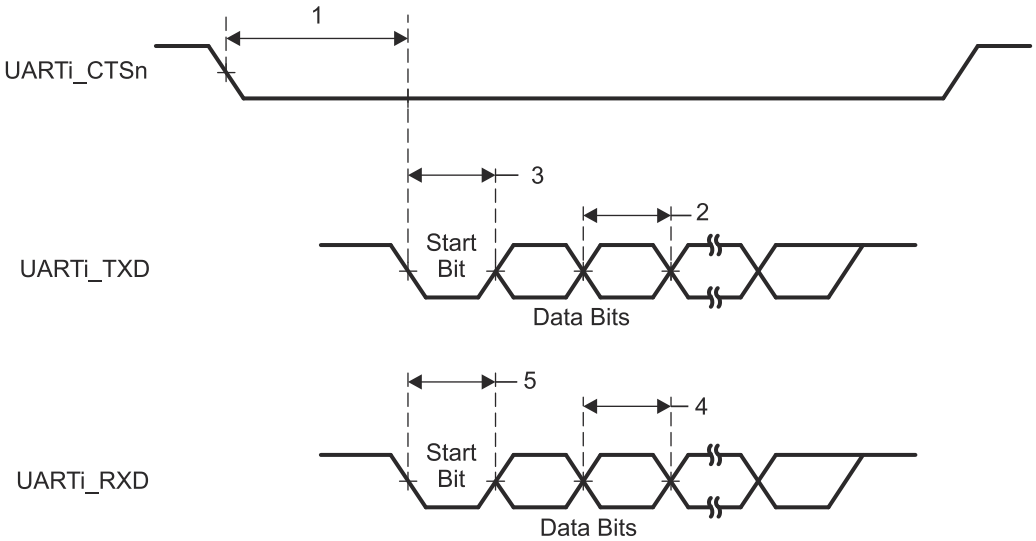

Figure 6-73. UART Timing Requirements and Switching Characteristics

6.11.6 Emulation and Debug

For more details about features and additional description information on the device Trace and JTAG interfaces, see the corresponding subsections within *Signal Descriptions* and *Detailed Description* sections. For more information, see the *On-Chip Debug* section in the device TRM.

6.11.6.1 JTAG

The acronym stands for the **Joint Test Action Group**, the committee of engineers who defined the boundary-scan standard (IEEE std 1149.1). For more details about features and additional description information on the device JTAG interface, see the corresponding subsections within *Signal Descriptions* and *Detailed Description* sections.

6.11.6.1.1 JTAG Timing Conditions

PARAMETER		MIN	MAX	UNIT
INPUT CONDITIONS				
SR_I	Input Slew Rate	0.5	2.00	V/ns
OUTPUT CONDITIONS				
C_L	Output Load Capacitance	5	15	pF

6.11.6.1.2 JTAG Timing Requirements

NO.	PARAMETER	DESCRIPTION	MIN	MAX	UNIT
J1	$t_{c(TCK)}$	Cycle time, TCK	40		ns
J2	$t_{w(TCKH)}$	Pulse width, TCK high	16		ns
J3	$t_{w(TCKL)}$	Pulse width, TCK low	16		ns
J4	$t_{su(TDI-TCKH)}$	Input setup time, TDI valid to TCK high	2		ns
	$t_{su(TMS-TCKH)}$	Input setup time, TMS valid to TCK high	2		
J5	$t_{h(TCK-TDI)}$	Input hold time, TDI valid from TCK high	15.9		ns
	$t_{h(TCK-TMS)}$	Input hold time, TMS valid from TCK high	15.9		

6.11.6.1.3 JTAG Switching Characteristics

NO.	PARAMETER	DESCRIPTION	MIN	MAX	UNIT
J6	$t_{d(TCKL-TDOI)}$	Delay time, TCK low to TDO invalid	–0.067005		ns
J7	$t_{d(TCKL-TDOV)}$	Delay time, TCK low to TDO valid		11.89594	ns

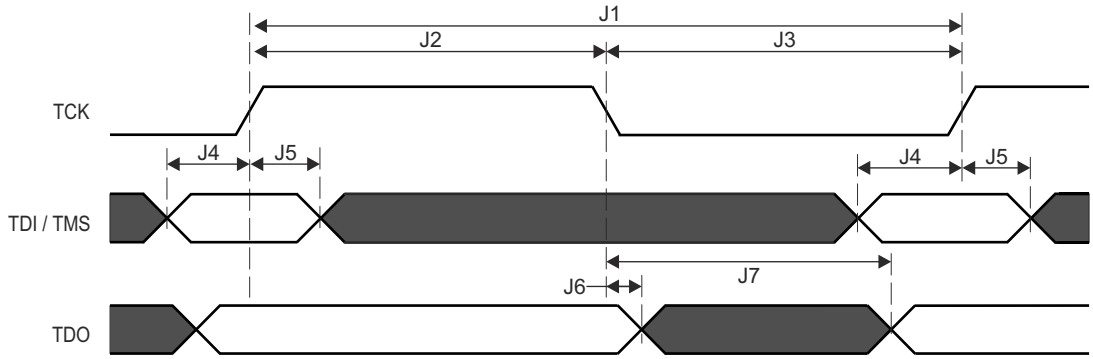

Figure 6-74. JTAG Timing Requirements and Switching Characteristics

Copyright © 2026 Texas Instruments Incorporated

6.11.6.2 Trace

6.11.6.2.1 Debug Trace Timing Conditions

PARAMETER		MIN	MAX	UNIT
OUTPUT CONDITIONS				
C_L	Output Load Capacitance	2	5	pF
OUTPUT CONDITIONS				
$t_{d(Trace\ Mismatch)}$	Propagation delay mismatch across all traces.		200	ps

6.11.6.2.2 Debug Trace Switching Characteristics

NO.	PARAMETER	DESCRIPTION	MIN	MAX	UNIT
DBTR1	$tc_{(TRC_CLK)}$	Cycle time, TRC_CLK	9.75		ns
DBTR2	$t_{w(TRC_CLKH)}$	Pulse width, TRC_CLK high	4.13		ns
DBTR3	$t_{w(TRC_CLKL)}$	Pulse width, TRC_CLK low	4.13		ns
DBTR4	$t_{osu(TRC_DATAV\text{-}TRC_CLK)}$	Output setup time, TRC_DATA valid to TRC_CLK edge	1.22		ns
DBTR5	$t_{oh(TRC_CLK\text{-}TRC\text{-}DATAI)}$	Output hold time, TRC_CLK edge to TRC_DATA invalid	1.22		ns
DBTR6	$t_{osu(TRC_CTLV\text{-}TRC_CLK)}$	Output setup time, TRC_CTL valid to TRC_CLK edge	1.22		ns
DBTR7	$t_{oh(TRC_CLK\text{-}TRC_CTLI)}$	Output hold time, TRC_CLK edge to TRC_CTL invalid	1.22		ns

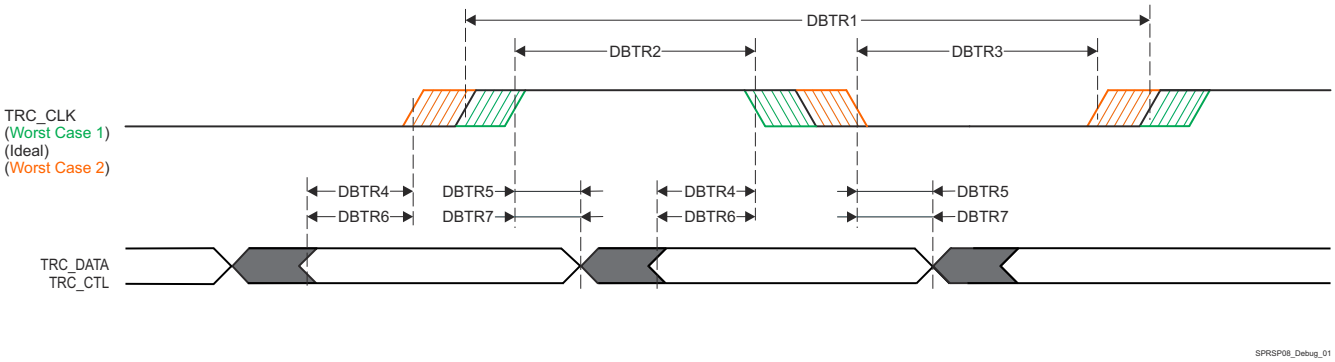

Figure 6-75. Trace Switching Characteristics

6.12 Decoupling Capacitor Requirements

6.12.1 Decoupling Capacitor Requirements

PARAMETER	DESCRIPTION	MIN	TYP	MAX	UNIT
C_{VDD}	Ground (Cap)		10		µF
C_{VDDS33}	3.3V VDDS (Cap)		10		µF
C_{VDDA33}	3.3V VDDA (Cap)		10		µF
C_{VDDS18}	1.8V VDDS (Cap)		0.1		µF
C_{VDDA18}	1.8V VDDA (Cap)		0.1		µF
C_{VPP}	1.7V VPP (Cap)		0.1		µF
C_{VDDS18_LDO}	1.8V LDO VDDS (Cap)		3.3		µF
C_{VDDA18_LDO}	1.8V LDO VDDA (Cap)		3.3		µF
C_{ADC_VREF}	ADC VREFHI (Cap)		4.7		µF

Copyright © 2026 Texas Instruments Incorporated

7 Detailed Description

7.1 Overview

The AM263x Sitara Arm® Microcontrollers are built to meet the complex real-time processing and control needs of next generation industrial and automotive embedded projects. AM263x uniquely combines advanced compute with industry leading real-time control peripherals to meet the growing performance needs of applications such as HEV/EV (traction inverters, on-board chargers, and DC-DC converters), motor drives, renewable energy, energy storage, and other general real-time constrained systems. AM263x combines up to four Cortex-R5F MCUs, a real-time control subsystem (CONTROLSS), a Hardware Security Module (HSM), and one instance of Sitara's Programmable Real-Time Unit Subsystem (PRU-ICSS), making AM263x designed for advanced motor control and digital power control applications.

For multicore AM263x devices, the R5F cores are arranged in clusters of two Cortex-R5F cores per cluster. Each Cortex-R5F core has 64KB of shared tightly coupled memory (TCM). AM263x has 2MB of shared SRAM spread across 4 banks of 512kB each. The multiple Arm® cores are configured to be in lockstep mode after device reset. They can be optionally programmed by the bootlooder to run in dual core mode instead. Extensive ECC is included with the on-chip memory, peripherals, and interconnect for enhanced reliability. The HSM on AM263x provides cryptographic acceleration, secure boot, and manages granular firewalls, enabling developers to design the most secure systems.

The Real-Time Control Subsystem (CONTROLSS) is a revolutionary subsystem integrated into the device. CONTROLSS contains multiple digital and analog control peripherals including: ADC, CMPSS, EPWM, ECAP, and EQEP, among others to enable efficient execution of critical sense/process/actuate real-time signal chain control loops. The integrated crossbar (XBAR) infrastructure enables flexible configuration and routing of external signals to internal ports and internal signals to external pins.

The PRU-ICSS in AM263x provides the flexible industrial communications capability necessary to run advanced Ethernet protocols such as EtherCAT®, PROFINET®, and Ethernet/IP™, or the PRU-ICSS can be used for standard Ethernet connectivity and custom I/O interfacing. The PRU-ICSS supports two Ethernet Ports at 10/100 Mbit operation. It also enables additional interfaces in the SoC including sigma delta decimation filters and absolute encoder interfaces. In addition to the PRU-ICSS, the Common Platform Switch (CPSW) interface provides two Ethernet ports that can support up to 10/100/1000 Mbit operation and supports standard Ethernet connectivity.

TI provides a complete set of microcontroller software and development tools for the AM263x family of microcontrollers in addition to multiple pin-to-pin compatible devices for scalability and ease of use.

Copyright © 2026 Texas Instruments Incorporated

7.2 Processor Subsystems

7.2.1 Arm Cortex-R5F Subsystem

The R5FSS is a dual-core implementation of the Arm® Cortex®-R5F processor configured for dual-core (split) or lockstep modes of operation. It also includes accompanying memories (L1 caches and tightly-coupled memories), standard Arm®CoreSight™ debug and trace architecture, integrated Vectored Interrupt Manager (VIM), ECC Aggregators, and various wrappers for protocol conversion and address translation for easy integration into the SoC. The device supports up to two R5FSS modules for a total possible 4x functional cores (dual-core mode) or 2x functional cores (lockstep mode).

Note

The Arm® Cortex®-R5F processor is a Cortex-R5 processor that includes the optional Floating-point Unit (FPU) extension.

For more information, see *R5FSS* section in *Processors and Accelerators* chapter in the device TRM.

8 Applications, Implementation, and Layout

Note

Information in the following applications sections is not part of the TI component specification, and TI does not warrant its accuracy or completeness. TI's customers are responsible for determining suitability of components for their purposes, as well as validating and testing their design implementation to confirm system functionality.

8.1 Device Connection and Layout Fundamentals

8.1.1 External Oscillator

For more information about External Oscillators, see the *Clock Specifications* section.

8.1.2 JTAG, EMU, and TRACE

Texas Instruments supports a variety of eXtended Development System (XDS™) JTAG controllers with various debug capabilities beyond only JTAG support. A summary of this information is available in the XDS Target Connection Guide.

For recommendations on JTAG, EMU, and TRACE routing, see the Emulation and Trace Headers Technical Reference Manual

8.1.3 Hardware Design Guide

For details regarding creating PCB systems based on the AM263x family of MCU devices, please see the AM263x Hardware Design Guide.

Copyright © 2026 Texas Instruments Incorporated

9 Device and Documentation Support

9.1 Device Nomenclature

To designate the stages in the product development cycle, TI assigns prefixes to the part numbers of all microcontrollers (MCUs) and support tools. Each device has one of three prefixes: X, P, or null (no prefix) (for example, XAM2634AOLFGMZCZQ). Texas Instruments recommends two of three possible prefix designators for its support tools: TMDX and TMDS. These prefixes represent evolutionary stages of product development from engineering prototypes (TMDX) through fully qualified production devices and tools (TMDS).

Device development evolutionary flow:

X Experimental device that is not necessarily representative of the final device's electrical specifications and may not use production assembly flow.

P Prototype device that is not necessarily the final silicon die and may not necessarily meet final electrical specifications.

null Production version of the silicon die that is fully qualified.

Support tool development evolutionary flow:

TMDX Development-support product that has not yet completed Texas Instruments internal qualification testing.

TMDS Fully-qualified development-support product.

X and P devices and TMDX development-support tools are shipped against the following disclaimer:

"Developmental product is intended for internal evaluation purposes."

Production devices and TMDS development-support tools have been characterized fully, and the quality and reliability of the device have been demonstrated fully. TI's standard warranty applies.

Predictions show that prototype devices (X or P) have a greater failure rate than the standard production devices. Texas Instruments recommends that these devices not be used in any production system because their expected end-use failure rate still is undefined. Only qualified production devices are to be used.

For orderable part numbers of AM263x devices in the ZCZ package type, see the Package Option Addendum of this document, the TI website (ti.com), or contact your TI sales representative.

9.1.1 Standard Package Symbolization

Note

Some devices may have a cosmetic circular marking visible on the top of the device package which results from the production test process. In addition, some devices may also show a color variation in the package substrate which results from the substrate manufacturer. These differences are cosmetic only with no reliability impact.

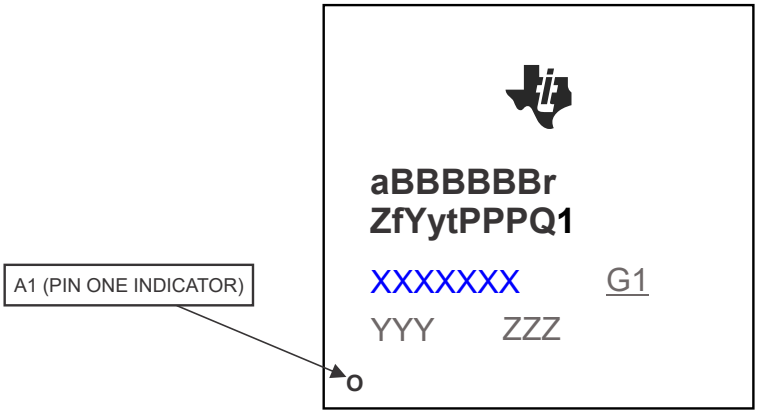

Figure 9-1. Printed Device Reference upto Device Revision C

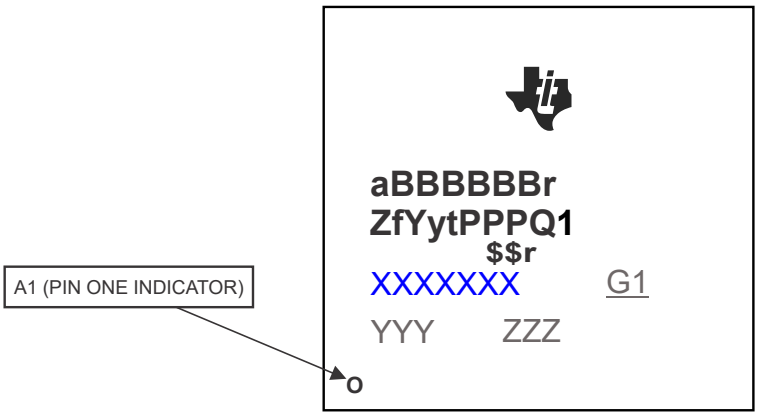

Figure 9-2. Printed Device Reference for Device Revision E

Copyright © 2026 Texas Instruments Incorporated

9.1.2 Device Naming Convention

Table 9-1. Nomenclature Description

FIELD PARAMETER	FIELD DESCRIPTION	VALUE	DESCRIPTION
a[2]	Device evolution stage	X	Prototype
		P	Preproduction (production test flow, no reliability data)
		BLANK[1]	Production
BBBBBB	Base production part number	AM2634	See *Device Comparison*.
		AM2632	
		AM2631	
r	Device revision	A	SR 1.0
		B	SR 1.0A
		C	SR 1.1
		D	SR 1.2 (Not in Production)
		E	SR 1.3
Z	Device Operating Performance Points	N	See *Operating Performance Points*.
		O or K	
		P	

Table 9-1. Nomenclature Description (continued)

FIELD PARAMETER	FIELD DESCRIPTION	VALUE	DESCRIPTION
f	Features (see Table 4-1, *Device Comparison*)	C	PRU Only + CAN-FD Supported + Standard Analog
		D	PRU-ICSS + CAN-FD Supported + Standard Analog
		E	PRU-ICSS + EtherCAT HW Accelerator + CAN-FD Supported + Standard Analog
		F	PRU-ICSS + EtherCAT HW Accelerator + CAN-FD Supported + Pre-integrated Stacks Enabled + Standard Analog
		J	PRU Only + CAN-FD Supported + Enhanced Analog
		K	PRU-ICSS + CAN-FD Supported + Enhanced Analog
		L	PRU-ICSS + EtherCAT HW Accelerator + CAN-FD Supported + Enhanced Analog
		M	PRU-ICSS + EtherCAT HW Accelerator + CAN-FD Supported + Pre-integrated Stacks + Enhanced Analog
		N	PRU-ICSS + EtherCAT HW Accelerator + CAN-FD Supported + Pre-integrated Stacks + Enhanced Analog + EPWM Multi Compare Shadow Registers (XCMP) + EPWM Pulse Edge Monitoring + ECAP Pulse Edge Monitoring + Diode Emulation Logic (DEL) Function + XBAR
Y	Functional Safety	G	Non-Functional Safety (AM2631 only)
		F	Functional Safety
y	Security	H	Secure
t[(3)]	Junction Temperature (see Section 6.5, *ROC*)	A	–40°C to 105°C - Industrial
		I	–40°C to 125°C - Automotive
		M	–40°C to 150°C - Extended Automotive
PPP	Package Designator	ZCZ	ZCZ NFBGA-N324 (15 mm × 15 mm) Package
Q1	Automotive Designator	Q1	Auto Qualified (AEC-Q100)
		BLANK	Standard
$$			FAB code
XXXXXXX			Lot Trace Code (LTC)
YYY			Production Code; For TI use only
ZZZ			Production Code; For TI use only
O			Pin one designator

Copyright © 2026 Texas Instruments Incorporated

Table 9-1. Nomenclature Description (continued)

FIELD PARAMETER	FIELD DESCRIPTION	VALUE	DESCRIPTION
G1			ECAT - Green package designator

(1) BLANK in the symbol or part number is collapsed so there are no gaps between characters.
(2) To designate the stages in the product development cycle, TI assigns prefixes to the part numbers. These prefixes represent evolutionary stages of product development from engineering prototypes through fully qualified production devices.
Prototype devices are shipped against the following disclaimer:
"This product is still in development and is intended for internal evaluation purposes."
Notwithstanding any provision to the contrary, TI makes no warranty expressed, implied, or statutory, including any implied warranty of merchantability of fitness for a specific purpose, of this device.
(3) Applies to device max junction temperature.

9.1.2.1 Silicon Version Identification

If software relies on silicon revision identification to enable or disable features, or to implement workarounds for known silicon errata, please note the following detection procedure .

The silicon version can be identified by reading bits [3:0] of TOP_CTRL: EFUSE_ROW_15, located at memory location 0x50D8 0434.

Note

The MCU+ SDK OTP Keywriter contains a PG_VER check. When switching to a new device revision, ensure the latest OTP Keywriter from the SDK is used for key programming.

Table 9-2. BIT FIELD DESCRIPTION OF TOP_CTRL:EFUSE_ROW_15

Reserved																												PG Version			
31	30	29	28	27	26	25	24	23	22	21	20	19	18	17	16	15	14	13	12	11	10	9	8	7	6	5	4	3	2	1	0

Table 9-3. IDENTIFYING PG_VERSION USING BITS[3:0] OF TOP_CTRL:EFUSE_ROW_15

PG VERSION	Device Revision	Description of Bits [3:0]
AM263 1.0	A	0001
AM263 1.0A	B	0010
AM263 1.1	C	0011
AM263 1.2[1]	D	0100
AM263 1.3	E	0101

Note

1. This sample version is not in production.

9.2 Tools and Software

The following products support development for AM263x platforms:

Development Tools

Code Composer Studio™ Integrated Development Environment Code Composer Studio (CCS) Integrated Development Environment (IDE) is a development environment that supports TI's Microcontroller and Embedded Processors portfolio. Code Composer Studio comprises a suite of tools used to develop and debug embedded applications. It includes an optimizing C/C++ compiler, source code editor, project build environment, debugger, profiler, and many other features. The intuitive IDE provides a single user interface taking you through each step of the application development flow. Familiar tools and interfaces allow users to get started faster than ever before. Code Composer Studio combines the advantages of the Eclipse software framework with advanced embedded debug capabilities from TI resulting in a compelling feature-rich development environment for embedded developers.

SysConfig-PinMux Tool The SysConfig-PinMux Utility is a software tool which provides a Graphical User Interface for configuring pin multiplexing settings, resolving conflicts and specifying I/O cell characteristics for TI Embedded Processor devices. The tool can be used to automatically calculate the optimal pinmux configuration to satisfy entered system requirements. The tool will generate output C header/code files that can be imported into software development kits (SDKs) and used to configure customer's software to meet custom hardware requirements.

For a complete listing of development-support tools for the processor platform, visit the Texas Instruments website at ti.com. For information on pricing and availability, contact the nearest TI field sales office or authorized distributor.

9.3 Documentation Support

To receive notification of documentation updates, navigate to the device product folder on ti.com. Click on *Notifications* to register and receive a weekly digest of any product information that has changed. For change details, review the revision history included in any revised document.

The following documents are provided to describe the AM263x device.

AM263x Silicon Errata Describes the known exceptions to the functional specifications for the device.

AM263x Technical Reference Manual Details the integration, the environment, the functional description, and the programming models for each peripheral and subsystem in the AM263x family of devices.

AM263x TRM Register Addendum Details the memory mapped register information for each peripheral and subsystem in the AM263x family of devices.

9.4 Support Resources

TI E2E™ support forums are an engineer's go-to source for fast, verified answers and design help — straight from the experts. Search existing answers or ask your own question to get the quick design help you need.

Linked content is provided "AS IS" by the respective contributors. They do not constitute TI specifications and do not necessarily reflect TI's views; see TI's Terms of Use.

9.5 Trademarks

Ethernet/IP™ is a trademark of ODVA, INC..
Sitara™, XDS™, Code Composer Studio™, and TI E2E™ are trademarks of Texas Instruments.
CoreSight™ is a trademark of Arm Limited (or its subsidiaries) in the US and/or elsewhere.
Arm® and Cortex® are registered trademarks of Arm Limited (or its subsidiaries) in the US and/or elsewhere.
EtherCAT® is a registered trademark of Beckhoff Automation GmbH.
PROFINET® is a registered trademark of PROFINET International.
IO-Link® is a registered trademark of PROFIBUS Nutzerorganisation e.V. eingetragener verein (e.v.) FED REP GERMANY.
All trademarks are the property of their respective owners.

Copyright © 2026 Texas Instruments Incorporated

9.6 Electrostatic Discharge Caution

This integrated circuit can be damaged by ESD. Texas Instruments recommends that all integrated circuits be handled with appropriate precautions. Failure to observe proper handling and installation procedures can cause damage.

ESD damage can range from subtle performance degradation to complete device failure. Precision integrated circuits may be more susceptible to damage because very small parametric changes could cause the device not to meet its published specifications.

9.7 Glossary

TI Glossary This glossary lists and explains terms, acronyms, and definitions.

10 Revision History

Changes from August 30, 2025 to October 26, 2026 (from Revision E (August 2025) to Revision F (October 2026)) **Page**

- Added EVITA - full HSM in Security feature.... 1
- The link for HTML version of datasheet has been provided.... 8
- (Pin Attributes Header List): Ball State During Reset and Ball State After Reset updated to clarify that these states also apply to warm reset.... 9
- (Pin Attributes Table): SAFETY_ERRORn Type changed to IO; 12
- (Pin Attributes Table): QSPI0_CLKLB removed; 12
- OSC Internal Oscillator Clock source section added.... 82
- MCU_OSC0 LVCMOS Digital Clock Source section added.... 82
- Added a new image of printed device reference for rev E.... 153
- Updated O to O or K in Device Operating Performance Points.... 155
- Added a section for Silicon Version Identification 157

Changes from July 21, 2023 to August 30, 2025 (from Revision D (July 2023) to Revision E (August 2025)) **Page**

- (Features): Added support for MII mode.... 1
- (Package Information): Updated Package Information table to match TI Standards.... 3
- (Device Comparision): Added Automotive temperature range.... 6
- (Pin Attributes): Updated SOP pin types from "0" to "I" only.... 12
- (ADC-CMPSS Signal Connections): Updated the CMPSS and ADC connections diagram.... 37
- (Pin Connectivity Requirements): Added "(SOP1)" after "QSPI0_D1".... 63
- (SAFETY_ERRORn Switching Characteristics): Updated table note reference from "RST22" to "SFTY3".... 81
- (CPSW MDIO Timing Requirements): Updated MDIO1 MIN value from "90 ns" to "45 ns".... 85
- (CPSW MDIO Switching Characteristics): Updated MDIO MIN value from "-150 ns" to "-10 ns" and MAX value from "150 ns" to "10 ns".... 85
- (CPSW RGMII[x]_TXC, RGMII[x]_TD[3:0], and RGMII[x]_TX_CTL Switching Characteristics - RGMII Mode): Updated table note on internal delay from "always enabled" to "by default enabled after POR.".... 90
- Removed mentions of TSN.... 150
- Added details about the Ethernet capabilities offered outside of the PRU-ICSS.... 150
- Clarified the architecture of the R5F cores for multicore devices.... 150
- Updated the description that outlined some HSM features.... 150
- (Device Naming Convention): Added device grade I with Junction temperature of -40°C to 125°C.... 155

11 Mechanical, Packaging, and Orderable Information

The following pages include mechanical, packaging, and orderable information. This information is the most current data available for the designated devices. This data is subject to change without notice and revision of this document. For browser-based versions of this data sheet, refer to the left-hand navigation.

To learn more about TI packaging, visit the Packaging information website.

Copyright © 2026 Texas Instruments Incorporated

PACKAGING INFORMATION

Orderable part number	Status (1)	Material type (2)	Package | Pins	Package qty | Carrier	RoHS (3)	Lead finish/ Ball material (4)	MSL rating/ Peak reflow (5)	Op temp (°C)	Part marking (6)
AM2631CNDGHAZCZR	Active	Production	NFBGA (ZCZ) | 324	1000 | LARGE T&R	Yes	Call TI	Level-3-260C-168 HR	-40 to 105	AM2631C NDGHAZCZ 548
AM2631CNDGHAZCZR.B	Active	Production	NFBGA (ZCZ) | 324	1000 | LARGE T&R	Yes	Call TI	Level-3-260C-168 HR	-40 to 105	AM2631C NDGHAZCZ 548
AM2631CNDGHMZCZRQ1	Active	Production	NFBGA (ZCZ) | 324	1000 | LARGE T&R	Yes	Call TI	Level-3-260C-168 HR	-40 to 150	AM2631C NDGHMZCZQ1 548
AM2631CNDGHMZCZRQ1.B	Active	Production	NFBGA (ZCZ) | 324	1000 | LARGE T&R	Yes	Call TI	Level-3-260C-168 HR	-40 to 150	AM2631C NDGHMZCZQ1 548
AM2631CODGHMZCZRQ1	Active	Production	NFBGA (ZCZ) | 324	1000 | LARGE T&R	Yes	Call TI	Level-3-260C-168 HR	-40 to 150	AM2631C ODGHMZCZQ1 548
AM2631CODGHMZCZRQ1.B	Active	Production	NFBGA (ZCZ) | 324	1000 | LARGE T&R	Yes	Call TI	Level-3-260C-168 HR	-40 to 150	AM2631C ODGHMZCZQ1 548
AM2632CNDFHAZCZR	Active	Production	NFBGA (ZCZ) | 324	1000 | LARGE T&R	Yes	Call TI	Level-3-260C-168 HR	-40 to 105	AM2632C NDFHAZCZ 548
AM2632CNDFHAZCZR.B	Active	Production	NFBGA (ZCZ) | 324	1000 | LARGE T&R	Yes	Call TI	Level-3-260C-168 HR	-40 to 105	AM2632C NDFHAZCZ 548
AM2632CNEFHAZCZR	Active	Production	NFBGA (ZCZ) | 324	1000 | LARGE T&R	Yes	Call TI	Level-3-260C-168 HR	-40 to 105	AM2632C NEFHAZCZ 548
AM2632CNEFHAZCZR.B	Active	Production	NFBGA (ZCZ) | 324	1000 | LARGE T&R	Yes	Call TI	Level-3-260C-168 HR	-40 to 105	AM2632C NEFHAZCZ 548
AM2632CODFHMZCZRQ1	Active	Production	NFBGA (ZCZ) | 324	1000 | LARGE T&R	Yes	Call TI	Level-3-260C-168 HR	-40 to 150	AM2632C ODFHMZCZQ1 548

Orderable part number	Status (1)	Material type (2)	Package | Pins	Package qty | Carrier	RoHS (3)	Lead finish/ Ball material (4)	MSL rating/ Peak reflow (5)	Op temp (°C)	Part marking (6)
AM2632CODFHMZCZRQ1.B	Active	Production	NFBGA (ZCZ) | 324	1000 | LARGE T&R	Yes	Call TI	Level-3-260C-168 HR	-40 to 150	AM2632C ODFHMZCZQ1 548
AM2632COKFHAZCZR	Active	Production	NFBGA (ZCZ) | 324	1000 | LARGE T&R	Yes	Call TI	Level-3-260C-168 HR	-40 to 105	AM2632C OKFHAZCZ 548
AM2632COKFHAZCZR.B	Active	Production	NFBGA (ZCZ) | 324	1000 | LARGE T&R	Yes	Call TI	Level-3-260C-168 HR	-40 to 105	AM2632C OKFHAZCZ 548
AM2632COKFHMZCZRQ1	Active	Production	NFBGA (ZCZ) | 324	1000 | LARGE T&R	Yes	Call TI	Level-3-260C-168 HR	-40 to 150	AM2632C OKFHMZCZQ1 548
AM2632COKFHMZCZRQ1.B	Active	Production	NFBGA (ZCZ) | 324	1000 | LARGE T&R	Yes	Call TI	Level-3-260C-168 HR	-40 to 150	AM2632C OKFHMZCZQ1 548
AM2632COLFHAZCZR	Active	Production	NFBGA (ZCZ) | 324	1000 | LARGE T&R	Yes	Call TI	Level-3-260C-168 HR	-40 to 105	AM2632C OLFHAZCZ 548
AM2632COLFHAZCZR.B	Active	Production	NFBGA (ZCZ) | 324	1000 | LARGE T&R	Yes	Call TI	Level-3-260C-168 HR	-40 to 105	AM2632C OLFHAZCZ 548
AM2632COMFHAZCZR	Active	Production	NFBGA (ZCZ) | 324	1000 | LARGE T&R	Yes	Call TI	Level-3-260C-168 HR	-40 to 105	AM2632C OMFHAZCZ 548
AM2632COMFHAZCZR.B	Active	Production	NFBGA (ZCZ) | 324	1000 | LARGE T&R	Yes	Call TI	Level-3-260C-168 HR	-40 to 105	AM2632C OMFHAZCZ 548
AM2632CPDFHMZCZRQ1	Active	Production	NFBGA (ZCZ) | 324	1000 | LARGE T&R	Yes	Call TI	Level-3-260C-168 HR	-40 to 150	AM2632C PDFHMZCZQ1 548
AM2632CPDFHMZCZRQ1.B	Active	Production	NFBGA (ZCZ) | 324	1000 | LARGE T&R	Yes	Call TI	Level-3-260C-168 HR	-40 to 150	AM2632C PDFHMZCZQ1 548
AM2634CODFHAZCZR	Active	Production	NFBGA (ZCZ) | 324	1000 | LARGE T&R	Yes	Call TI	Level-3-260C-168 HR	-40 to 105	AM2634C ODFHAZCZ 548

Orderable part number	Status (1)	Material type (2)	Package | Pins	Package qty | Carrier	RoHS (3)	Lead finish/ Ball material (4)	MSL rating/ Peak reflow (5)	Op temp (°C)	Part marking (6)
AM2634CODFHAZCZR.B	Active	Production	NFBGA (ZCZ) | 324	1000 | LARGE T&R	Yes	Call TI	Level-3-260C-168 HR	-40 to 105	AM2634C ODFHAZCZ 548
AM2634CODFHMZCZRQ1	Active	Production	NFBGA (ZCZ) | 324	1000 | LARGE T&R	Yes	Call TI	Level-3-260C-168 HR	-40 to 150	AM2634C ODFHMZCZQ1 548
AM2634CODFHMZCZRQ1.B	Active	Production	NFBGA (ZCZ) | 324	1000 | LARGE T&R	Yes	Call TI	Level-3-260C-168 HR	-40 to 150	AM2634C ODFHMZCZQ1 548
AM2634COEFHAZCZR	Active	Production	NFBGA (ZCZ) | 324	1000 | LARGE T&R	Yes	Call TI	Level-3-260C-168 HR	-40 to 105	AM2634C OEFHAZCZ 548
AM2634COEFHAZCZR.B	Active	Production	NFBGA (ZCZ) | 324	1000 | LARGE T&R	Yes	Call TI	Level-3-260C-168 HR	-40 to 105	AM2634C OEFHAZCZ 548
AM2634COKFHAZCZR	Active	Production	NFBGA (ZCZ) | 324	1000 | LARGE T&R	Yes	Call TI	Level-3-260C-168 HR	-40 to 105	AM2634C OKFHAZCZ 548
AM2634COKFHAZCZR.B	Active	Production	NFBGA (ZCZ) | 324	1000 | LARGE T&R	Yes	Call TI	Level-3-260C-168 HR	-40 to 105	AM2634C OKFHAZCZ 548
AM2634COKFHMZCZRQ1	Active	Production	NFBGA (ZCZ) | 324	1000 | LARGE T&R	Yes	Call TI	Level-3-260C-168 HR	-40 to 150	AM2634C OKFHMZCZQ1 548
AM2634COKFHMZCZRQ1.B	Active	Production	NFBGA (ZCZ) | 324	1000 | LARGE T&R	Yes	Call TI	Level-3-260C-168 HR	-40 to 150	AM2634C OKFHMZCZQ1 548
AM2634COLFHAZCZR	Active	Production	NFBGA (ZCZ) | 324	1000 | LARGE T&R	Yes	Call TI	Level-3-260C-168 HR	-40 to 105	AM2634C OLFHAZCZ 548
AM2634COLFHAZCZR.B	Active	Production	NFBGA (ZCZ) | 324	1000 | LARGE T&R	Yes	Call TI	Level-3-260C-168 HR	-40 to 105	AM2634C OLFHAZCZ 548
AM2634COMFHAZCZR	Active	Production	NFBGA (ZCZ) | 324	1000 | LARGE T&R	Yes	Call TI	Level-3-260C-168 HR	-40 to 105	AM2634C OMFHAZCZ 548

Orderable part number	Status (1)	Material type (2)	Package | Pins	Package qty | Carrier	RoHS (3)	Lead finish/ Ball material (4)	MSL rating/ Peak reflow (5)	Op temp (°C)	Part marking (6)
AM2634COMFHAZCZR.B	Active	Production	NFBGA (ZCZ) | 324	1000 | LARGE T&R	Yes	Call TI	Level-3-260C-168 HR	-40 to 105	AM2634C OMFHAZCZ 548
AM2634CPDFHMZCZRQ1	Active	Production	NFBGA (ZCZ) | 324	1000 | LARGE T&R	Yes	Call TI	Level-3-260C-168 HR	-40 to 150	AM2634C PDFHMZCZQ1 548
AM2634CPDFHMZCZRQ1.B	Active	Production	NFBGA (ZCZ) | 324	1000 | LARGE T&R	Yes	Call TI	Level-3-260C-168 HR	-40 to 150	AM2634C PDFHMZCZQ1 548
XAM2634BOMFHAZCZ	Active	Preproduction	NFBGA (ZCZ) | 324	1 | JEDEC TRAY (5+1)	-	Call TI	Call TI	-40 to 105	

(1) **Status:** For more details on status, see our product life cycle.

(2) **Material type:** When designated, preproduction parts are prototypes/experimental devices, and are not yet approved or released for full production. Testing and final process, including without limitation quality assurance, reliability performance testing, and/or process qualification, may not yet be complete, and this item is subject to further changes or possible discontinuation. If available for ordering, purchases will be subject to an additional waiver at checkout, and are intended for early internal evaluation purposes only. These items are sold without warranties of any kind.

(3) **RoHS values:** Yes, No, RoHS Exempt. See the TI RoHS Statement for additional information and value definition.

(4) **Lead finish/Ball material:** Parts may have multiple material finish options. Finish options are separated by a vertical ruled line. Lead finish/Ball material values may wrap to two lines if the finish value exceeds the maximum column width.

(5) **MSL rating/Peak reflow:** The moisture sensitivity level ratings and peak solder (reflow) temperatures. In the event that a part has multiple moisture sensitivity ratings, only the lowest level per JEDEC standards is shown. Refer to the shipping label for the actual reflow temperature that will be used to mount the part to the printed circuit board.

(6) **Part marking:** There may be an additional marking, which relates to the logo, the lot trace code information, or the environmental category of the part.

Multiple part markings will be inside parentheses. Only one part marking contained in parentheses and separated by a "~" will appear on a part. If a line is indented then it is a continuation of the previous line and the two combined represent the entire part marking for that device.

Important Information and Disclaimer: The information provided on this page represents TI's knowledge and belief as of the date that it is provided. TI bases its knowledge and belief on information provided by third parties, and makes no representation or warranty as to the accuracy of such information. Efforts are underway to better integrate information from third parties. TI has taken and continues to take reasonable steps to provide representative and accurate information but may not have conducted destructive testing or chemical analysis on incoming materials and chemicals. TI and TI suppliers consider certain information to be proprietary, and thus CAS numbers and other limited information may not be available for release.

In no event shall TI's liability arising out of such information exceed the total purchase price of the TI part(s) at issue in this document sold by TI to Customer on an annual basis.

OTHER QUALIFIED VERSIONS OF AM2631, AM2631-Q1, AM2632, AM2632-Q1, AM2634, AM2634-Q1 :

- Catalog : AM2631, AM2632, AM2634
- Automotive : AM2631-Q1, AM2632-Q1, AM2634-Q1

NOTE: Qualified Version Definitions:

- Catalog - TI's standard catalog product
- Automotive - Q100 devices qualified for high-reliability automotive applications targeting zero defects

TAPE AND REEL INFORMATION

REEL DIMENSIONS

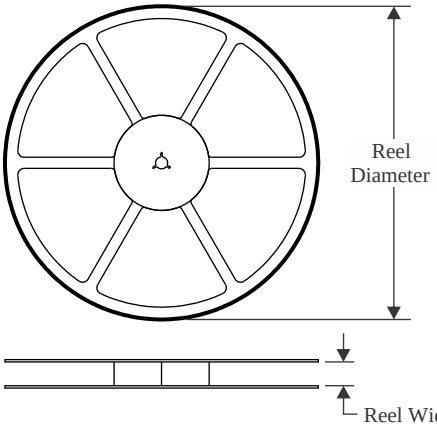

TAPE DIMENSIONS

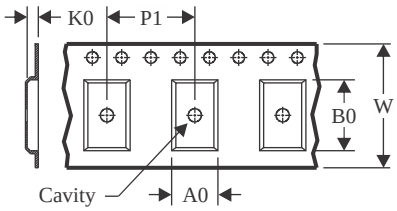

A0	Dimension designed to accommodate the component width
B0	Dimension designed to accommodate the component length
K0	Dimension designed to accommodate the component thickness
W	Overall width of the carrier tape
P1	Pitch between successive cavity centers

QUADRANT ASSIGNMENTS FOR PIN 1 ORIENTATION IN TAPE

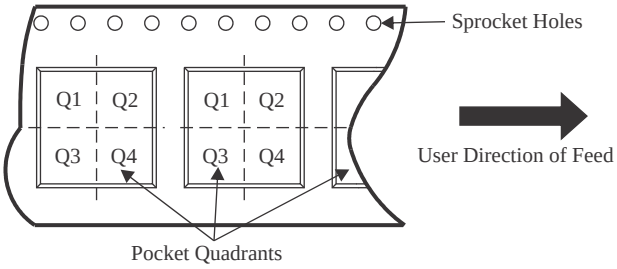

*All dimensions are nominal

Device	Package Type	Package Drawing	Pins	SPQ	Reel Diameter (mm)	Reel Width W1 (mm)	A0 (mm)	B0 (mm)	K0 (mm)	P1 (mm)	W (mm)	Pin1 Quadrant
AM2631CNDGHAZCZR	NFBGA	ZCZ	324	1000	330.0	24.4	15.3	15.3	2.35	20.0	24.0	Q1
AM2631CNDGHMZCZRQ1	NFBGA	ZCZ	324	1000	330.0	24.4	15.3	15.3	2.35	20.0	24.0	Q1
AM2631CODGHMZCZRQ1	NFBGA	ZCZ	324	1000	330.0	24.4	15.3	15.3	2.35	20.0	24.0	Q1
AM2632CNDFHAZCZR	NFBGA	ZCZ	324	1000	330.0	24.4	15.3	15.3	2.35	20.0	24.0	Q1
AM2632CNEFHAZCZR	NFBGA	ZCZ	324	1000	330.0	24.4	15.3	15.3	2.35	20.0	24.0	Q1
AM2632CODFHMZCZRQ1	NFBGA	ZCZ	324	1000	330.0	24.4	15.3	15.3	2.35	20.0	24.0	Q1
AM2632COKFHAZCZR	NFBGA	ZCZ	324	1000	330.0	24.4	15.3	15.3	2.35	20.0	24.0	Q1
AM2632COKFHMZCZRQ1	NFBGA	ZCZ	324	1000	330.0	24.4	15.3	15.3	2.35	20.0	24.0	Q1
AM2632COLFHAZCZR	NFBGA	ZCZ	324	1000	330.0	24.4	15.3	15.3	2.35	20.0	24.0	Q1
AM2632COMFHAZCZR	NFBGA	ZCZ	324	1000	330.0	24.4	15.3	15.3	2.35	20.0	24.0	Q1
AM2632CPDFHMZCZRQ1	NFBGA	ZCZ	324	1000	330.0	24.4	15.3	15.3	2.35	20.0	24.0	Q1
AM2634CODFHAZCZR	NFBGA	ZCZ	324	1000	330.0	24.4	15.3	15.3	2.35	20.0	24.0	Q1
AM2634CODFHMZCZRQ1	NFBGA	ZCZ	324	1000	330.0	24.4	15.3	15.3	2.35	20.0	24.0	Q1
AM2634COEFHAZCZR	NFBGA	ZCZ	324	1000	330.0	24.4	15.3	15.3	2.35	20.0	24.0	Q1
AM2634COKFHAZCZR	NFBGA	ZCZ	324	1000	330.0	24.4	15.3	15.3	2.35	20.0	24.0	Q1
AM2634COKFHMZCZRQ1	NFBGA	ZCZ	324	1000	330.0	24.4	15.3	15.3	2.35	20.0	24.0	Q1

Device	Package Type	Package Drawing	Pins	SPQ	Reel Diameter (mm)	Reel Width W1 (mm)	A0 (mm)	B0 (mm)	K0 (mm)	P1 (mm)	W (mm)	Pin1 Quadrant
AM2634COLFHAZCZR	NFBGA	ZCZ	324	1000	330.0	24.4	15.3	15.3	2.35	20.0	24.0	Q1
AM2634COMFHAZCZR	NFBGA	ZCZ	324	1000	330.0	24.4	15.3	15.3	2.35	20.0	24.0	Q1
AM2634CPDFHMZCZRQ1	NFBGA	ZCZ	324	1000	330.0	24.4	15.3	15.3	2.35	20.0	24.0	Q1

TAPE AND REEL BOX DIMENSIONS

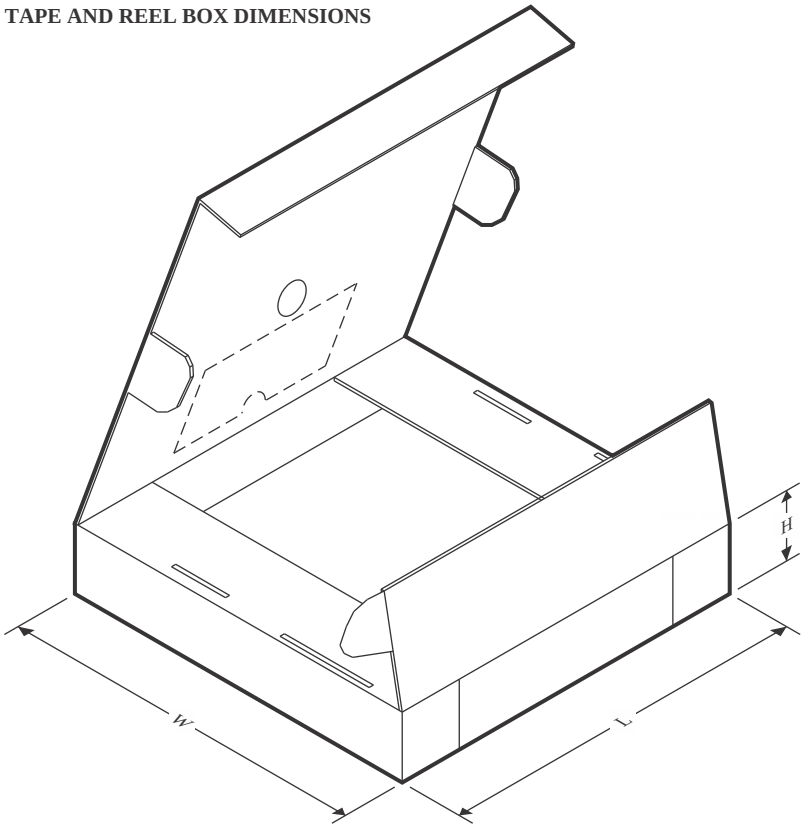

*All dimensions are nominal

Device	Package Type	Package Drawing	Pins	SPQ	Length (mm)	Width (mm)	Height (mm)
AM2631CNDGHAZCZR	NFBGA	ZCZ	324	1000	336.6	336.6	41.3
AM2631CNDGHMZCZRQ1	NFBGA	ZCZ	324	1000	336.6	336.6	41.3
AM2631CODGHMZCZRQ1	NFBGA	ZCZ	324	1000	336.6	336.6	41.3
AM2632CNDFHAZCZR	NFBGA	ZCZ	324	1000	336.6	336.6	41.3
AM2632CNEFHAZCZR	NFBGA	ZCZ	324	1000	336.6	336.6	41.3
AM2632CODFHMZCZRQ1	NFBGA	ZCZ	324	1000	336.6	336.6	41.3
AM2632COKFHAZCZR	NFBGA	ZCZ	324	1000	336.6	336.6	41.3
AM2632COKFHMZCZRQ1	NFBGA	ZCZ	324	1000	336.6	336.6	41.3
AM2632COLFHAZCZR	NFBGA	ZCZ	324	1000	336.6	336.6	41.3
AM2632COMFHAZCZR	NFBGA	ZCZ	324	1000	336.6	336.6	41.3
AM2632CPDFHMZCZRQ1	NFBGA	ZCZ	324	1000	336.6	336.6	41.3
AM2634CODFHAZCZR	NFBGA	ZCZ	324	1000	336.6	336.6	41.3
AM2634CODFHMZCZRQ1	NFBGA	ZCZ	324	1000	336.6	336.6	41.3
AM2634COEFHAZCZR	NFBGA	ZCZ	324	1000	336.6	336.6	41.3
AM2634COKFHAZCZR	NFBGA	ZCZ	324	1000	336.6	336.6	41.3
AM2634COKFHMZCZRQ1	NFBGA	ZCZ	324	1000	336.6	336.6	41.3
AM2634COLFHAZCZR	NFBGA	ZCZ	324	1000	336.6	336.6	41.3
AM2634COMFHAZCZR	NFBGA	ZCZ	324	1000	336.6	336.6	41.3

Device	Package Type	Package Drawing	Pins	SPQ	Length (mm)	Width (mm)	Height (mm)
AM2634CPDFHMZCZRQ1	NFBGA	ZCZ	324	1000	336.6	336.6	41.3

PLASTIC BALL GRID ARRAY

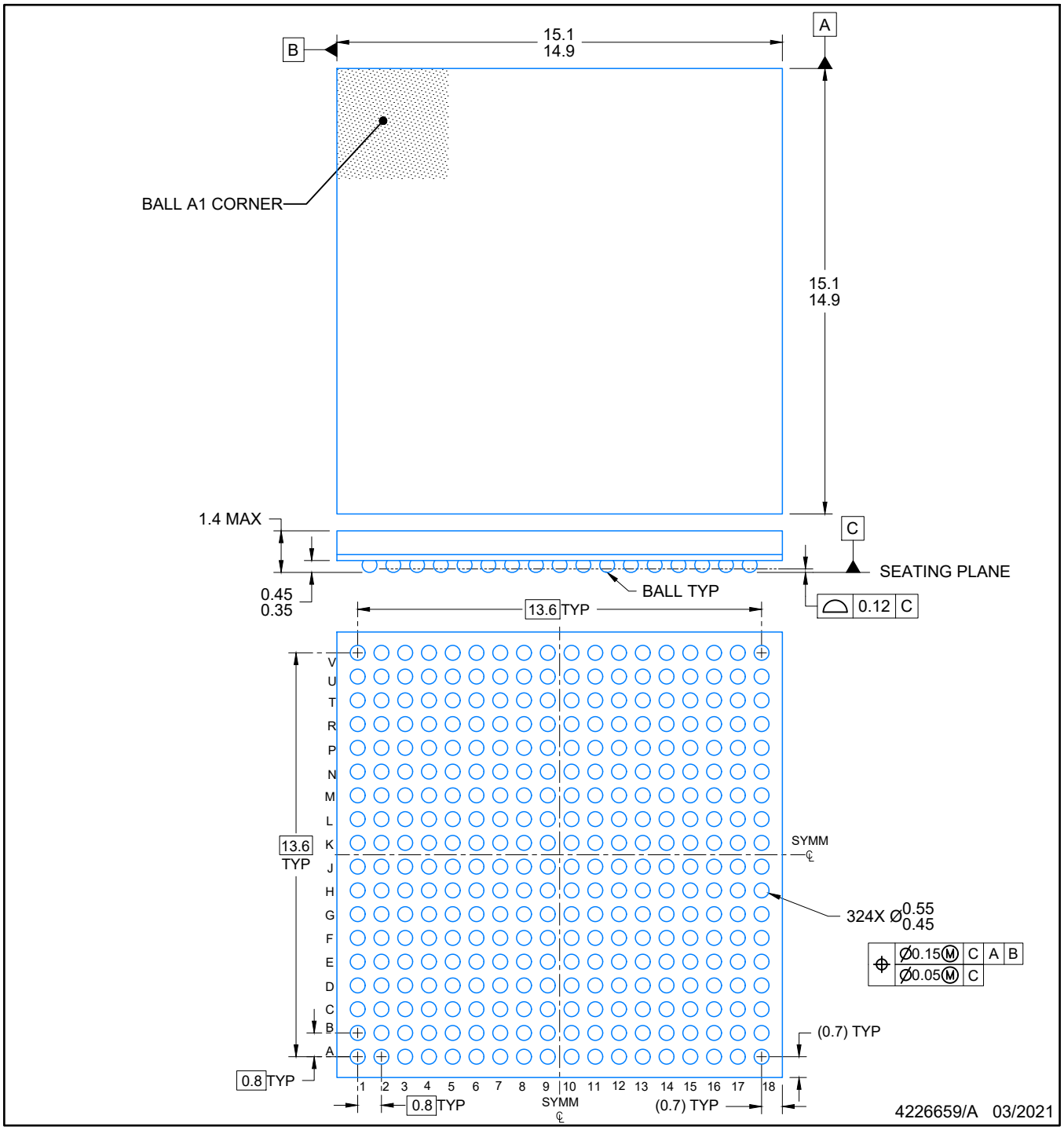

NOTES:

NanoFree is a trademark of Texas Instruments.

1. All linear dimensions are in millimeters. Any dimensions in parenthesis are for reference only. Dimensioning and tolerancing per ASME Y14.5M.
2. This drawing is subject to change without notice.

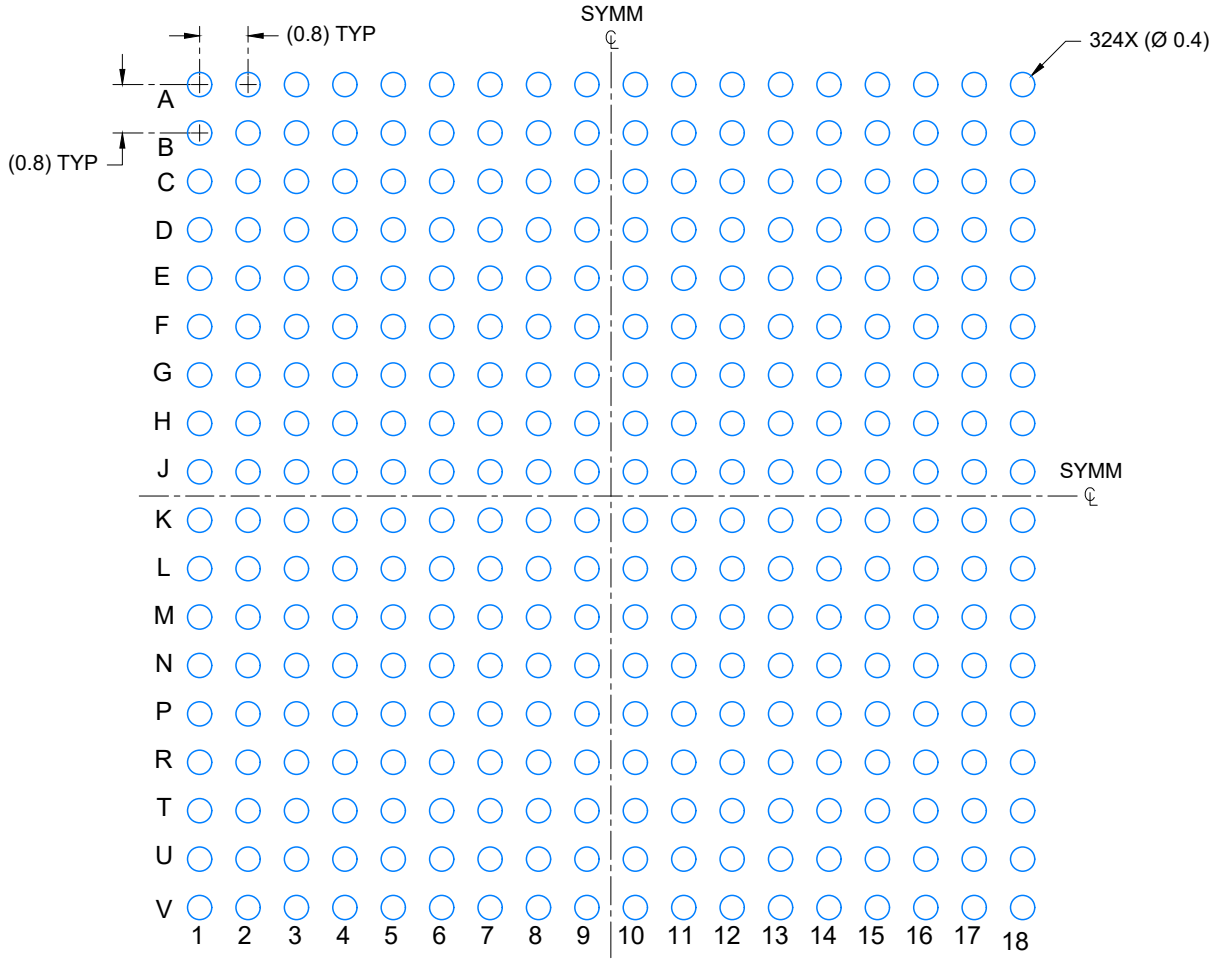

LAND PATTERN EXAMPLE

SCALE: 8X

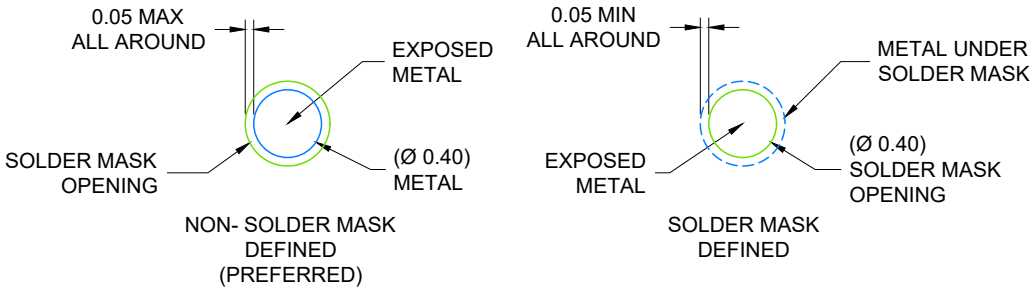

SOLDER MASK DETAILS

NOT TO SCALE

4226659/A 03/2021

NOTES: (continued)

3. Final dimensions may vary due to manufacturing tolerance considerations and also routing constraints. Refer to Texas Instruments Literature number SNVA009 (www.ti.com/lit/snva009).

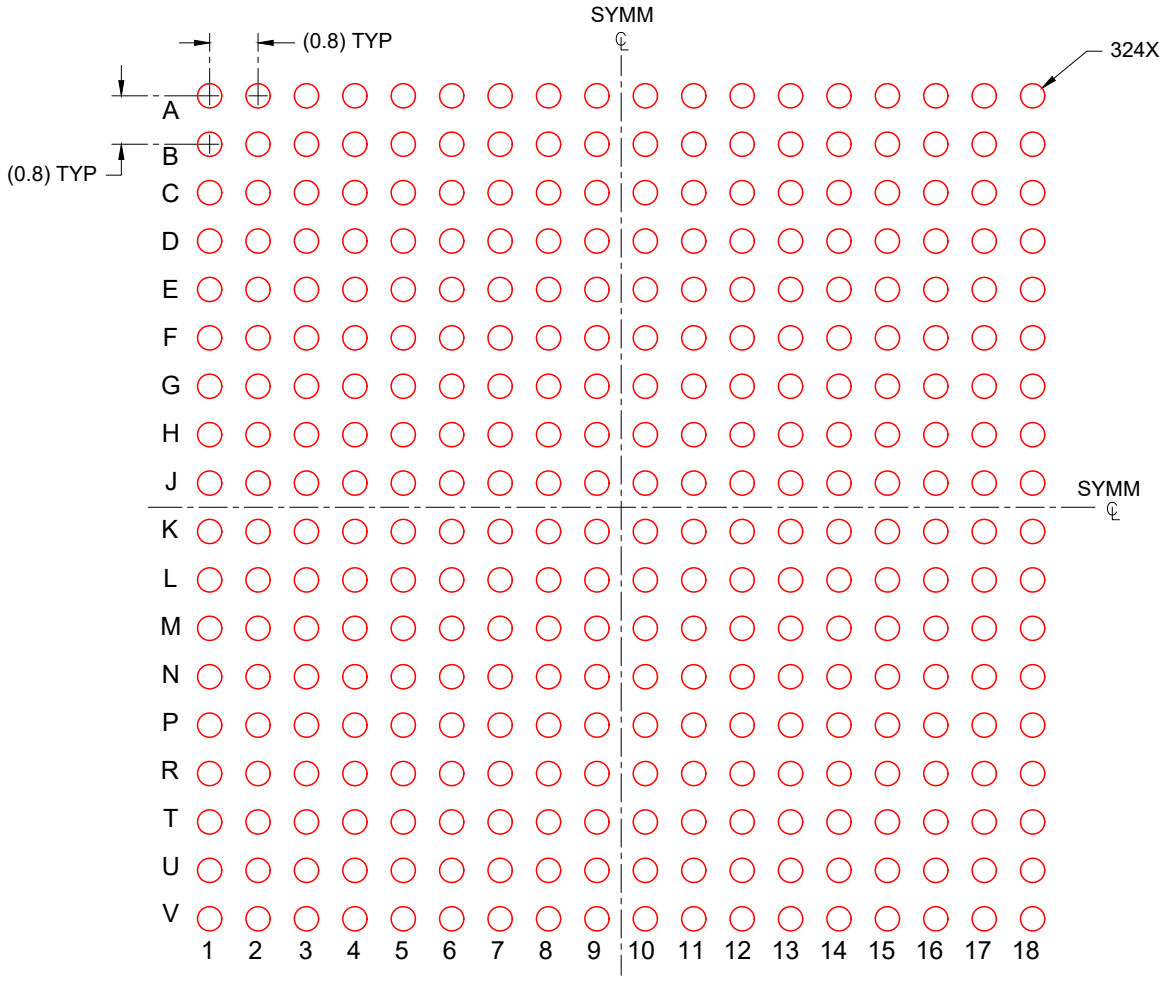

SOLDER PASTE EXAMPLE
BASED ON 0.150 mm THICK STENCIL
SCALE: 8X

4226659/A 03/2021

NOTES: (continued)

4. Laser cutting apertures with trapezoidal walls and rounded corners may offer better paste release.

IMPORTANT NOTICE AND DISCLAIMER

TI PROVIDES TECHNICAL AND RELIABILITY DATA (INCLUDING DATASHEETS), DESIGN RESOURCES (INCLUDING REFERENCE DESIGNS), APPLICATION OR OTHER DESIGN ADVICE, WEB TOOLS, SAFETY INFORMATION, AND OTHER RESOURCES “AS IS” AND WITH ALL FAULTS, AND DISCLAIMS ALL WARRANTIES, EXPRESS AND IMPLIED, INCLUDING WITHOUT LIMITATION ANY IMPLIED WARRANTIES OF MERCHANTABILITY, FITNESS FOR A PARTICULAR PURPOSE OR NON-INFRINGEMENT OF THIRD PARTY INTELLECTUAL PROPERTY RIGHTS.

These resources are intended for skilled developers designing with TI products. You are solely responsible for (1) selecting the appropriate TI products for your application, (2) designing, validating and testing your application, and (3) ensuring your application meets applicable standards, and any other safety, security, regulatory or other requirements.

These resources are subject to change without notice. TI grants you permission to use these resources only for development of an application that uses the TI products described in the resource. Other reproduction and display of these resources is prohibited. No license is granted to any other TI intellectual property right or to any third party intellectual property right. TI disclaims responsibility for, and you fully indemnify TI and its representatives against any claims, damages, costs, losses, and liabilities arising out of your use of these resources.

TI’s products are provided subject to TI’s Terms of Sale, TI’s General Quality Guidelines, or other applicable terms available either on ti.com or provided in conjunction with such TI products. TI’s provision of these resources does not expand or otherwise alter TI’s applicable warranties or warranty disclaimers for TI products. Unless TI explicitly designates a product as custom or customer-specified, TI products are standard, catalog, general purpose devices.

TI objects to and rejects any additional or different terms you may propose.

Copyright © 2026, Texas Instruments Incorporated

Last updated 10/2025