BQ25306 スタンドアロン 17V、 3.0A 1-2 セル 降圧バッテリ・チャージャ

1 特長

- スタンドアロン・チャージャと構成が容易
- 高効率 1.2MHz 同期整流スイッチモード降圧充電器
  - 1 セル・バッテリの場合 5V 入力から 2A で 92.5% の充電効率
  - 1 セル・バッテリの場合 9V 入力から 2A で 91.8% の充電効率
  - 2 セル・バッテリの場合 12V 入力から 2A で 95% の充電効率
- 1 つの入力で USB 入力および高電圧アダプタに対応
  - 4.1V～17V 入力電圧範囲に対応、入力電圧の絶対最大定格 28V
  - 入力電圧のダイナミック・パワー・マネージメント (VINDPM) によるバッテリ電圧トラッキング
- 高集積
  - 逆方向ブロッキングと同期スイッチング MOSFET を内蔵
  - 内部入力および充電電流センス
  - ループ補償内蔵
  - ブートストラップ・ダイオードを内蔵
- 3.4V～9.0V のプログラム可能な充電電圧
- 3.0A の最大高速充電電流
- 4.5V V_{BAT} で 200nA の低バッテリ・リーク電流
- IC ディスエーブル・モードで 4.25μA の VBUS 消費電流
- 120℃での充電電流の熱レギュレーション
- プリチャージ電流：高速充電電流の 10%
- 終了電流：高速充電電流の 10%
- 充電精度
  - ±0.5% の充電電圧レギュレーション
  - ±10% の充電電流レギュレーション
- 安全性
  - サーマル・レギュレーションおよびサーマル・シャットダウン
  - 入力低電圧誤動作防止 (UVLO) および過電圧保護 (OVP)
  - バッテリ過充電保護
  - プリチャージおよび高速充電用の安全タイマ
  - バッテリ・フィードバック・ピン FB が断線または短絡している場合、充電はディスエーブルになります
  - 低温 / 高温バッテリ温度保護
  - STAT ピンでの異常検出出力
- WQFN 3x3-16 パッケージで供給

2 アプリケーション

- ワイヤレス・スピーカー
- ゲーム
- スタンド型チャージャ
- 医療用

3 概要

BQ25306 は、1 セルおよび 2 セル・リチウムイオンリチウムポリマ、および LiFePO4 バッテリ用の高集積スタンドアロン・スイッチモード・バッテリ・チャージャです。BQ25306 は、4.1V～17V の入力電圧と 3A の高速充電電流に対応しています。このデバイスには電流センシング・トポロジが内蔵されているため、高い充電効率と低い BOM コストを実現できます。クラス最高の 200nA 低静止電流を実現したこのデバイスは、バッテリのエネルギーを節約し、ポータブル・デバイスの保管時間を最大化します。BQ25306 は、3×3 WQFN パッケージで供給されるため、2 層レイアウトが簡単で、スペースに制約のあるアプリケーションに適しています。

製品情報

部品番号 (1)	パッケージ	本体サイズ (公称)
BQ25306	WQFN (16)	3.00mm × 3.00mm

(1) 利用可能なパッケージについては、このデータシートの末尾にある注文情報を参照してください。

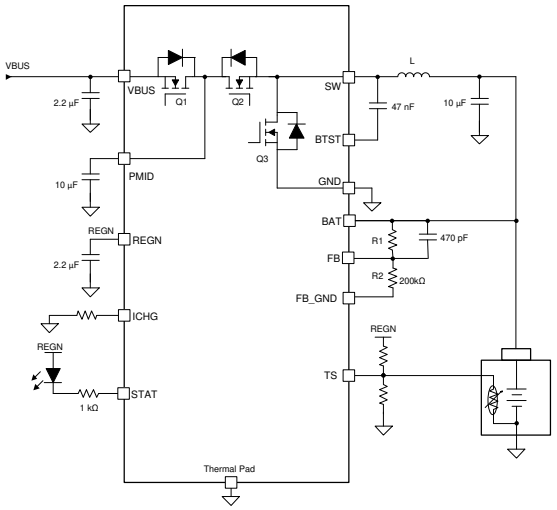

簡素化されたアプリケーション

英語版の TI 製品についての情報を翻訳したこの資料は、製品の概要を確認する目的で便宜的に提供しているものです。該当する正式な英語版の最新情報は、www.ti.com で閲覧でき、その内容が常に優先されます。TI では翻訳の正確性および妥当性につきましては一切保証いたしません。実際の設計などの前には、必ず最新版の英語版をご参照くださいますようお願いいたします。

Table of Contents

1 特長 1
2 アプリケーション 1
3 概要 1
4 Revision History 2
5 概要 (続き) 3
6 Device Comparison Table 4
7 Pin Configuration and Functions 5
8 Specifications 7
8.1 Absolute Maximum Ratings 7
8.2 ESD Ratings 7
8.3 Recommended Operating Conditions 7
8.4 Thermal Information 8
8.5 Electrical Characteristics 8
8.6 Timing Requirements 11
8.7 Typical Characteristics 12
9 Detailed Description 14
9.1 Overview 14
9.2 Functional Block Diagram 14
9.3 Feature Description 16
9.4 Device Functional Modes 20
10 Application and Implementation 21
10.1 Application Information 21
10.2 Typical Applications 21
11 Power Supply Recommendations 29
12 Layout 30
12.1 Layout Guidelines 30
12.2 Layout Example 30
13 Device and Documentation Support 32
13.1 Device Support 32
13.2 Documentation Support 32
13.3 ドキュメントの更新通知を受け取る方法 32
13.4 サポート・リソース 32
13.5 Trademarks 32
13.6 静電気放電に関する注意事項 32
13.7 用語集 32
14 Mechanical, Packaging, and Orderable Information 33

4 Revision History

資料番号末尾の英字は改訂を表しています。その改訂履歴は英語版に準じています。

Changes from Revision * (March 2020) to Revision A (November 2020)	Page
• 「事前情報」から「量産データ」に変更	1

Copyright © 2023 Texas Instruments Incorporated

5 概要 (続き)

BQ25306 は 4.1V～17V の入力をサポートしており、シングル・セル・バッテリまたはデュアル・バッテリを直列に充電します。充電電圧は 3.4V～9.0V で、分圧抵抗によってプログラム可能です。 BQ25306 は 直列接続されたシングル・セル (1S) バッテリまたはデュアル・セル・バッテリに最大 3A の連続充電電流を供給します。このデバイスは、ポータブル・デバイス用の高速充電を特長としています。入力電圧レギュレーションにより、入力電源からバッテリに最大の充電電力を供給します。このソリューションは、入力逆方向ブロッキング FET (RBFET、Q1)、ハイサイド・スイッチング FET (HSFET、Q2)、ローサイド・スイッチング FET (LSFET、Q3) と高度に統合されています。

BQ25306 は、ロスレスの内蔵電流センシング機能を搭載しており、部品点数を最小限に抑えて電力損失と BOM コストを低減します。また、ハイサイド・ゲート・ドライブおよびバッテリ温度監視用のブートストラップ・ダイオードが内蔵されているため、システム設計を簡素化できます。このデバイスは、ホスト制御なしで、充電サイクルの開始から完了までを実行できます。BQ25306 の充電電圧と充電電流は、外付け抵抗で設定されます。BQ25306 は充電電圧は外付け分圧抵抗によってプログラミングされ、プリコンディショニング、定電流、定電圧の 3 つのフェーズでバッテリを充電します。充電サイクルの終わりに、充電電流が終端電流のスレッショルドを下回り、かつバッテリ電圧が再充電スレッショルドを上回ると、充電器は自動的に処理を終了します。バッテリ電圧が再充電スレッショルドを下回ると、充電器は自動的にまた充電サイクルを開始します。この充電器は、負の温度係数 (NTC) サーミスタに基づくバッテリ温度監視、充電安全タイマ、入力過電圧および過電流保護、バッテリ過電圧保護など、バッテリ充電とシステム動作のためのさまざまな安全機能を備えています。ピンの断線および短絡保護も内蔵されており、バッテリ電圧帰還ピン FB または帰還抵抗が誤って断線または短絡した場合に保護されます。サーマル・レギュレーションにより充電電流が制御され、大電力動作時や高い周囲温度条件時にダイの温度が制限されます。

STAT ピン出力により、充電状態とフォルト状態がレポートされます。入力電圧が除去されると、デバイスは自動的に HiZ モードに移行し、バッテリから充電器デバイスへのリーク電流が非常に低くなります。BQ25306 は 3mm × 3mm の薄型 WQFN パッケージで供給されます。

6 Device Comparison Table

	BQ25302	BQ25306
Battery Cells in Series	1 cell	1-2 cell
Input Voltage	4.1V to 6.2V	4.1V - 17V
Charge Voltage	4.1V, 4.35V, 4.4V, 4.2V	Programmable from 3.4V to 9.0V
Maximum Fast Charge Current	2.0A	3.0A
Battery Temperature Protection (JEITA or Cold/Hot)	Cold/Hot	Cold/Hot

Copyright © 2023 Texas Instruments Incorporated

7 Pin Configuration and Functions

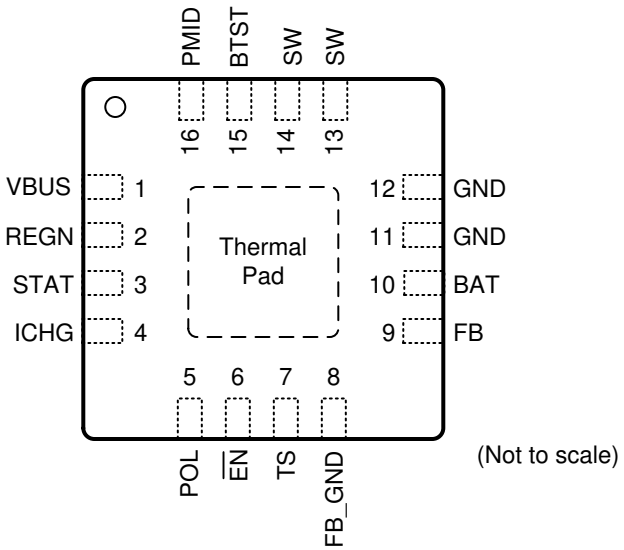

図 7-1. RTE Package 16-Pin WQFN Top View

表 7-1. Pin Functions

PIN		I/O[(1)]	DESCRIPTION
NAME	NO.		
VBUS	1	P	Charger input voltage. The internal n-channel reverse block MOSFET (RBFET) is connected between VBUS and PMID with VBUS on source. Place a 2.2uF ceramic capacitor from VBUS to GND and place it as close as possible to IC.
PMID	16	P	Connected to the drain of the reverse blocking MOSFET (RBFET) and the drain of high-side MOSFET (HSFET). Place ceramic 10μF on PMID to GND and place it as close as possible to IC.
SW	13,14	P	Switching node. Connected to output inductor. Internally SW is connected to the source of the n-channel HSFET and the drain of the n-channel LSFET. Connect the 0.047μF bootstrap capacitor from SW to BTST.
BTST	15	P	High-side FET driver supply. Internally, the BTST is connected to the cathode of the internal boost-strap diode. Connect the 0.047μF bootstrap capacitor from SW to BTST.
GND	11,12	P	Ground. Connected directly to thermal pad on the top layer. A single point connection is recommended between power ground and analog ground near the IC GND pins.
REGN	2	P	Low-side FET driver positive supply output. Connect a 2.2μF ceramic capacitor from REGN to GND. The capacitor should be placed close to the IC.
BAT	10	AI	Battery voltage sensing input. Connect this pin to the positive terminal of the battery pack and the node of inductor output terminal. 10-μF capacitor is recommended to connect to this pin.
TS	7	AI	Battery temperature voltage input. Connect a negative temperature coefficient thermistor (NTC). Program temperature window with a resistor divider from REGN to TS and TS to GND. Charge suspends when TS pin voltage is out of range. When TS pin is not used, connect a 10-kΩ resistor from REGN to TS and a 10-kΩ resistor from TS to GND. It is recommended to use a 103AT-2 thermistor.
ICHG	4	AI	Charge current program input. Connect a 1% resistor RICHG from this pin to ground to program the charge current as ICHG = K_{ICHG} / R_{ICHG} (K_{ICHG} = 40,000). No capacitor is allowed to connect at this pin. When ICHG pin is pulled to ground or left open, the charger stop switching and STAT pin starts blinking.
STAT	3	AO	Charge status indication output. This pin is open drain output. Connect this pin to REGN via a current limiting resistor and LED. The STAT pin indicates charger status as: • Charge in progress: STAT pin is pulled LOW • Charge completed, charge disabled by $\overline{EN}$: STAT pin is OPEN • Fault conditions: STAT pin blinks.
FB	9	AI	Battery voltage feedback input. Connect this pin to resistor divider's middle point to program battery charge voltage. When this pin is shorted to GND or open by fault, the converter stop switching and STAT pin blinks. The resistor divider consists of a resistor R1 from battery positive terminal to FB pin and a resistor R2 from FB pin to FB_GND. The recommended resistance value of R2 is 200kΩ or lower. The battery charge voltage is programmed as VBATREG = 1.1 (1 + R1/R2). The voltage regulation loop is internally compensated and a 470pF feedforward capacitor is recommended to connect from battery to FB pin.

Copyright © 2023 Texas Instruments Incorporated

表 7-1. Pin Functions (continued)

PIN		I/O[(1)]	DESCRIPTION
NAME	NO.		
FB_GND	8	AI	Battery voltage feedback ground input. Connect the feedback resistor divider's low side resister to this pin. The input of this pin is in high impedance when adaptor is unplugged or the charger is disabled by $\overline{EN}$ pin.
POL	5	AI	$\overline{EN}$ pin polority selection. Keep this pin floating for standalone charger.
$\overline{EN}$	6	AI	Device sisable input. With POL pin floating, the device is enabled with $\overline{EN}$ pin floating or pulled low, and the device is disabled if $\overline{EN}$ pin is pulled high. With POL pin grounded, the device is enabled with $\overline{EN}$ pin pulled high, and the device is disabled with $\overline{EN}$ pin pulled low or floating.
Thermal Pad	17	-	Ground reference for the device that is also the thermal pad used to conduct heat from the device. This connection serves two purposes. The first purpose is to provide an electrical ground connection for the device. The second purpose is to provide a low thermal-impedance path from the device die to the PCB. This pad should be tied externally to a ground plane. Ground layer(s) are connected to thermal pad through vias under thermal pad.

(1) AI = Analog input, AO = Analog Output, AIO = Analog input Output, DI = Digital input, DO = Digital Output, DIO = Digital input Output, P = Power

Copyright © 2023 Texas Instruments Incorporated

8 Specifications

8.1 Absolute Maximum Ratings

Over operating free-air temperature range (unless otherwise noted)[1]

PARAMETER		MIN	MAX	UNIT
Voltage Range (with respect to GND)	VBUS (converter not switching)	–2	28	V
	PMID(converter not switching)	–0.3	28	V
	SW	–2[2]	20	V
	BTST	–0.3	25.5	V
	STAT	–0.3	5.5	V
	BAT	–0.3	11	V
	BTST to SW	–0.3	5.5	V
	ICHG	–0.3	5.5	V
	REGN	–0.3	5.5	V
	POL	–0.3	5.5	V
	/EN	–0.3	5.5	V
	TS	–0.3	5.5	V
Voltage Range (with respect to GND)	FB	–0.3	11	V
	FB_GND	–0.3	11	V
Output Sink Current	STAT		6	mA
	REGN		20	mA
Junction temperature	T_J	–40	150	ºC
Storage temperature	T_{stg}	–65	150	ºC

(1) Stresses beyond those listed under *Absolute Maximum Rating* may cause permanent damage to the device. These are stress ratings only, which do not imply functional operation of the device at these or any other conditions beyond those indicated under *Recommended Operating Condition*. Exposure to absolute-maximum-rated conditions for extended periods may affect device reliability.
(2) -3V for 10ns transient

8.2 ESD Ratings

			VALUE	UNIT
$V_{(ESD)}$	Electrostatic discharge	Human body model (HBM), per ANSI/ESDA/JEDEC JS-001, all pins[1]	±2000	V
		Charged device model (CDM), per JEDEC specification JESD22-C101, all pins[2]	±250	

(1) JEDEC document JEP155 states that 500-V HBM allows safe manufacturing with a standard ESD control process.
(2) JEDEC document JEP157 states that 250-V CDM allows safe manufacturing with a standard ESD control process.

8.3 Recommended Operating Conditions

over operating free-air temperature range (unless otherwise noted)

PARAMETER		MIN	NOM	MAX	UNIT
V_{VBUS}	Input voltage	4.1		17	V
V_{BAT}	Battery voltage	3.4		9	V
I_{VBUS}	Input current			3	A
I_{SW}	Output current (SW)			3	A
T_A	Ambient temperature	–40		85	°C
L	Recommended inductance at V_{VBUS_MAX} < 6.2V		1.0		µH
L	Recommended inductance at V_{VBUS_MAX} > 6.2V		2.2		µH

8.3 Recommended Operating Conditions (continued)

over operating free-air temperature range (unless otherwise noted)

PARAMETER		MIN	NOM	MAX	UNIT
C_{VBUS}	Recommended capacitance at VBUS		2.2		µF
C_{PMID}	Recommended capacitance at PMID		10		µF
C_{BAT}	Recommended capacitance at BAT		10		µF

8.4 Thermal Information

THERMAL METRIC[1]		BQ2530x RTE 16-PINS	UNIT
$R_{\theta JA}$	Junction-to-ambient thermal resistance (JEDEC[1])	45.8	°C/W
$R_{\theta JC(top)}$	Junction-to-case (top) thermal resistance	48.5	°C/W
$R_{\theta JB}$	Junction-to-board thermal resistance	19.0	°C/W
Ψ_{JT}	Junction-to-top characterization parameter	1.3	°C/W
Ψ_{JB}	Junction-to-board characterization parameter	19	°C/W
$R_{\theta JC(bot)}$	Junction-to-case (bottom) thermal resistance	7.9	°C/W

(1) For more information about traditional and new thermal metrics, see the Semiconductor and IC Package Thermal Metrics application report.

8.5 Electrical Characteristics

$V_{VBUS_UVLOZ} < V_{VBUS} < V_{VBUS_OVP}$ and $V_{VBUS} > V_{BAT} + V_{SLEEP}$, T_J = -40°C to +125°C, and T_J = 25°C for typical values (unless otherwise noted)

PARAMETER		TEST CONDITIONS	MIN	TYP	MAX	UNIT
QUIESCENT CURRENT						
I_{VBUS_REVS}	VBUS reverse current from BAT/SW to VBUS, T_J = -40°C - 85°C	$V_{BAT} = V_{SW}$ = 4.5V, V_{BUS} is shorted to GND, measure V_{BUS} reverse current		0.07	3	µA
I_{VBUS_REVS}	VBUS reverse current from BAT/SW to VBUS T_J = -40°C - 85°C	$V_{BAT} = V_{SW}$ = 9.0V, V_{BUS} is shorted to GND, measure V_{BUS} reverse current		0.14	6	µA
$I_{Q_VBUS_DIS}$	VBUS leakage current in disable mode, T_J = -40°C - 85°C	V_{BUS} = 5V, V_{BAT} = 4V, charger is disabled, /EN is pulled high		3.5	4.25	µA
$I_{Q_VBUS_DIS}$	VBUS leakage current in disable mode, T_J = -40°C - 85°C	V_{BUS} = 9V, V_{BAT} = 4V, charger is disabled, /EN is pulled high		4.7	6	µA
$I_{Q_BAT_HIZ}$	BAT and SW pin leakage current in HiZ mode, T_J = -40°C - 65°C	$V_{BAT} = V_{SW}$ = 4.5V, V_{BUS} floating		0.17	1.0	µA
$I_{Q_BAT_DIS_9V}$	BAT and SW pin leakage current in disable mode, T_J = -40°C - 65°C	$V_{BAT} = V_{SW}$ = 9V, I_{CHG} connected to a 25kΩ resistor, V_{BUS} floating		0.50	2	µA
VBUS POWER UP						
V_{VBUS_OP}	V_{BUS} operating range		4.1		17.0	V
V_{VBUS_UVLOZ}	V_{BUS} power on reset	V_{BUS} rising	3.0		3.80	V
$V_{VBUS_UVLOZ_HYS}$	V_{BUS} power on reset hysteresis	V_{BUS} falling		250		mV
V_{VBUS_LOWV}	A condition to turnon REGN	V_{BUS} rising, REGN turns on, V_{BAT} = 3.2V	3.8	3.90	4.00	V
$V_{VBUS_LOWV_HYS}$	A condition to turnon REGN, hysteresis	V_{BUS} falling, REGN turns off, V_{BAT} = 3.2V		300		mV
V_{SLEEP}	Enter sleep mode threshold	V_{BUS} falling, V_{BUS} - VBAT, $V_{VBUS_LOWV} < V_{BAT} < V_{BATREG}$	30	60	100	mV
V_{SLEEPZ}	Exit sleep mode threshold	V_{BUS} rising, $V_{BUS} - V_{BAT}$, $V_{VBUS_LOWV} < V_{BAT} < V_{BATREG}$	110	157	295	mV
$V_{VBUS_OVP_RISE}$	V_{BUS} overvoltage rising threshold	V_{BUS} rising, converter stops switching	17.00	17.40	17.80	V

Copyright © 2023 Texas Instruments Incorporated

8.5 Electrical Characteristics (continued)

$V_{VBUS_UVLOZ} < V_{VBUS} < V_{VBUS_OVP}$ and $V_{VBUS} > V_{BAT} + V_{SLEEP}$, T_J = -40°C to +125°C, and T_J = 25°C for typical values (unless otherwise noted)

PARAMETER		TEST CONDITIONS	MIN	TYP	MAX	UNIT
$V_{VBUS_OVP_HYS}$	V_{BUS} overvoltage falling hysteresis	V_{BUS} falling, converter stops switching		750		mV
MOSFETS						
R_{DSON_Q1}	Top reverse blocking MOSFET on-resistance between VBUS and PMID (Q1)	V_{REGN} = 5V		40	65	mΩ
R_{DSON_Q2}	High-side switching MOSFET on-resistance between PMID and SW (Q2)	V_{REGN} = 5V		50	82	mΩ
R_{DSON_Q3}	Low-side switching MOSFET on-resistance between SW and GND (Q3)	V_{REGN} = 5V		45	72	mΩ
$R_{DSON_FB_GND}$	FB_GND MOSFET on-resistance between FB_GND and GND				38	Ω
BATTERY CHARGER						
V_{BATREG_RANGE}	Charge voltage regulation range	V_{VBUS} = 12V, VBATREG is programmed by FB resistor divider	3.400		9.000	V
$V_{FB_REF_VBATREG}$	Battery feedback regulation voltage	TJ = -40°C to +85°C	1094	1100	1104.5	mV
I_{CHG}	Charge current regulation	ICHG set at 1.72A with R_{ICHG}=23.2kΩ	1.55	1.72	1.89	A
		ICHG set at 1.0A with RICHG=40.2kΩ	0.90	1.00	1.10	A
		ICHG set at 0.5A with R_{ICHG}=78.7kΩ	0.40	0.500	0.60	A
I_{TERM}	Termination current	ICHG = 1.72A, 10% of ICHG, RICHG=23.2kΩ	138	172	206	mA
I_{TERM}	Termination current	ICHG = 1.0A, 10% of ICHG, RICHG=40.2kΩ	70	100	130	mA
I_{TERM}	Termination current	ICHG = 0.5A, ITERM =63mA RICHG=78.7kΩ	33	63	93	mA
I_{PRECHG}	Precharge current	ICHG = 1.72A, 10% of ICHG, R_{ICHG}=23.2kΩ	115	172	225	mA
		ICHG = 1.0A, 10% of ICHG, R_{ICHG}=40.2kΩ	50	100	150	mA
		ICHG = 0.5A, 10% of ICHG, R_{ICHG}=78.7kΩ	28	63	98	mA
$V_{BAT_SHORT_RISE}$	VBAT short rising threshold	Short to precharge	2.05	2.20	2.35	V
$V_{BAT_SHORT_FALL}$	VBAT short falling threshold	Precharge to battery short	1.85	2.00	2.15	V
I_{BAT_SHORT}	Battery short current	$V_{BAT} < V_{BAT_SHORT_FALL}$	25	35	46	mA
$V_{FB_REF_LOWV_RISE}$	$V_{BATLOWV}$ rising threshold	Precharge to fast charge rising, as percentage of $V_{FB_REF_VBATREG}$	68	70	72	%
$V_{FB_REF_LOWV_FALL}$	$V_{BATLOWV}$ falling threshold	Fast charge to precharge falling, as percentage of $V_{FB_REF_VBATREG}$	66	68	70	%
$V_{FB_REF_RECHG}$	Recharge threshold	V_{FB} falling, as percentage of $V_{FB_REF_VBATREG}$	95.2	96.4	97.6	%
INPUT VOLTAGE / CURRENT REGULATION						
V_{INDPM_MIN}	Minimum input voltage regulation	V_{BAT} = 3.5V, measured at PMID pin	4.0	4.07	4.2	V
V_{INDPM}	Input voltage regulation	V_{BAT} = 4V, measured at PMID pin, V_{INDPM} = 1.044*V_{BAT} + 0.125V	4.15	4.30	4.41	V
V_{INDPM}	Input voltage regulation	V_{BAT} = 8V, measured at PMID pin, V_{INDPM} = 1.044*V_{BAT} + 0.125V	8.27	8.47	8.67	V
I_{INDPM_3A}	Input current regulation		3.00	3.35	3.70	A
BATTERY OVER-VOLTAGE PROTECTION						
$V_{FB_BAT_OVP_RISE}$	Battery overvoltage rising threshold	V_{BAT} rising as percentage of $V_{FB_REF_VBATREG}$	103	104	105	%

Copyright © 2023 Texas Instruments Incorporated

8.5 Electrical Characteristics (continued)

$V_{VBUS_UVLOZ} < V_{VBUS} < V_{VBUS_OVP}$ and $V_{VBUS} > V_{BAT} + V_{SLEEP}$, T_J = -40°C to +125°C, and T_J = 25°C for typical values (unless otherwise noted)

PARAMETER		TEST CONDITIONS	MIN	TYP	MAX	UNIT
$V_{FB_BAT_OVP_FALL}$	Battery overvoltage falling threshold	V_{BAT} falling as percentage of $V_{FB_REF_VBATREG}$	101	102	103	%
CONVERTER PROTECTION						
$V_{BTST_REFRESH}$	Bootstrap refresh comparator threshold	(V_{BTST} - V_{SW}) when LSFET refresh pulse is requested, V_{BUS} = 5V	2.7	3	3.3	V
I_{HSFET_OCP}	HSFET cycle by cycle over current limit threshold		5.2	6.2	6.7	A
STAT INDICATION						
I_{STAT_SINK}	STAT pin sink current		6			mA
F_{BLINK}	STAT pin blink frequency			1		Hz
F_{BLINK_DUTY}	STAT pin blink duty cycle			50		%
THERMAL REGULATION AND THERMAL SHUTDOWN						
T_{REG}	Junction temperature regulation accuracy		111	120	133	°C
T_{SHUT}	Thermal shutdown rising threshold	Temperature increasing		150		°C
	Thermal shutdown falling threshold	Temperature decreasing		125		°C
BUCK MODE OPERATION						
F_{SW}	PWM switching frequency	SW node frequency	1.02	1.20	1.38	MHz
D_{MAX}	Maximum PWM Duty Cycle			97.0		%
REGN LDO						
V_{REGN_UVLO}	REGN UVLO	V_{VBUS} rising			3.85	V
V_{REGN}	REGN LDO output voltage	V_{VBUS} = 5V, I_{REGN} = 0 to 16mA	4.2		5.0	V
V_{REGN}	REGN LDO output voltage	V_{VBUS} = 12V, I_{REGN} = 16mA	4.50		5.40	V
ICHG SETTING						
V_{ICHG}	ICHG pin regulated voltage		993	998	1003	mV
$R_{ICHG_SHORT_FALL}$	Maximum resistance to disable charge				1.0	kΩ
$R_{ICHG_OPEN_RISE}$	Minimum resistance to disable charge		565			kΩ
R_{ICHG_MAX}	Maximum programmable resistance at ICHG				250	kΩ
$R_{ICHG_MIN_SLE1}$	Minimum programmable resistance at ICHG		11.70			kΩ
R_{ICHG_HIGH}	ICHG setting resistor threshold to clamp precharge and termination current to 63mA	$R_{ICHG} > R_{ICHG_HIGH}$	60	65	70	kΩ
K_{ICHG}	Charge current ratio	ICHG set at 1.72A with R_{ICHG} = 23.2kΩ, $I_{CHG} = K_{ICHG} / R_{ICHG}$	36000	40000	44000	AxΩ
K_{ICHG}	Charge current ratio	ICHG set at 1.0A with R_{ICHG} = 40.2kΩ, $I_{CHG} = K_{ICHG} / R_{ICHG}$	36000	40280	44000	AxΩ
K_{ICHG}	Charge current ratio	ICHG set at 0.5A with R_{ICHG} = 78.7kΩ, $I_{CHG} = K_{ICHG} / R_{ICHG}$	32000	40700	48000	AxΩ
COLD/HOT THERMISTOR COMPARATOR						
V_{T1}%	TCOLD (0°C) threshold, charge suspended if thermistor temperature is below T1	V_{TS} rising, as percentage to V_{REGN}	72.68	73.5	74.35	%
V_{T1}%	V_{TS} falling	As Percentage to V_{REGN}	70.68	71.5	72.33	%

Copyright © 2023 Texas Instruments Incorporated

8.5 Electrical Characteristics (continued)

$V_{VBUS_UVLOZ} < V_{VBUS} < V_{VBUS_OVP}$ and $V_{VBUS} > V_{BAT} + V_{SLEEP}$, T_J = -40°C to +125°C, and T_J = 25°C for typical values (unless otherwise noted)

PARAMETER		TEST CONDITIONS	MIN	TYP	MAX	UNIT
V_{T3}%	THOT (45°C) threshold, charge suspended if thermistor temperature is above T_HOT	V_{TS} falling, as percentage to V_{REGN}	46.35	47.25	48.15	%
V_{T3}%	V_{TS} rising	As percentage to VREGN	47.35	48.25	49.15	%
LOGIC I/O PIN CHARACTERESTICS (POL, EN)						
V_{ILO}	Input low threshold	Falling			0.40	V
V_{IH}	Input high threshold	Rising	1.3			V
I_{BIAS}	High-level leakage current at /EN pin	/EN pin is pulled up to 1.8 V		1.0		µA

8.6 Timing Requirements

PARAMETER		TEST CONDITIONS	MIN	NOM	MAX	UNIT
VBUS/BAT POWER UP						
$t_{CHG_ON_EN}$	Delay from enable at /EN pin to charger power on	/EN pin voltage rising		245		ms
$t_{CHG_ON_VBUS}$	Delay from VBUS to charge start	/EN pin is grounded, batttery present		275		ms
BATTERY CHARGER						
t_{SAFETY_FAST}	Charge safety timer	Fast charge safety timer 20 hours	15.0	20.0	24.0	hr
t_{SAFETY_PRE}	Charge safety timer	Precharge safety timer	1.5	2.0	2.5	hr

8.7 Typical Characteristics

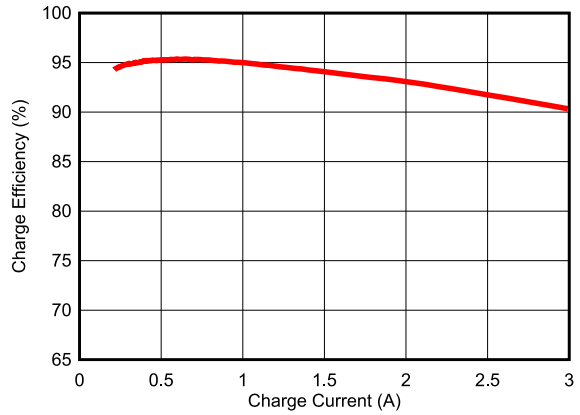

f_{SW} = 1.2 MHz　　Inductance = 1.0 uH
V_{VBUS} = 5.0 V, V_{BAT} = 3.8 V　　Inductor DCR = 10 mΩ

図 8-1. 1-Cell Battery Charge Efficiency vs. Charge Current

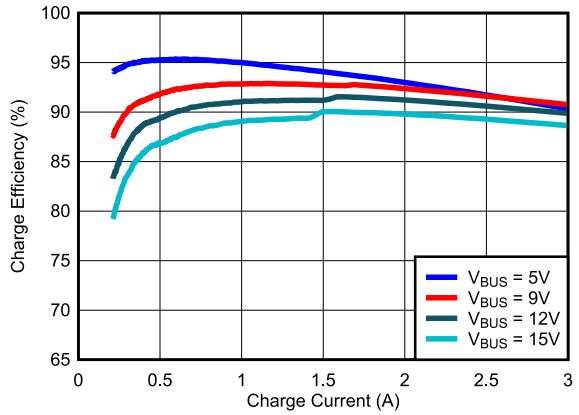

f_{SW} = 1.2 MHz　　Inductance = 2.2 uH
V_{BAT} = 3.8 V　　Inductor DCR = 20 mΩ

図 8-2. 1-Cell Battery Charge Efficiency vs. Charge Current

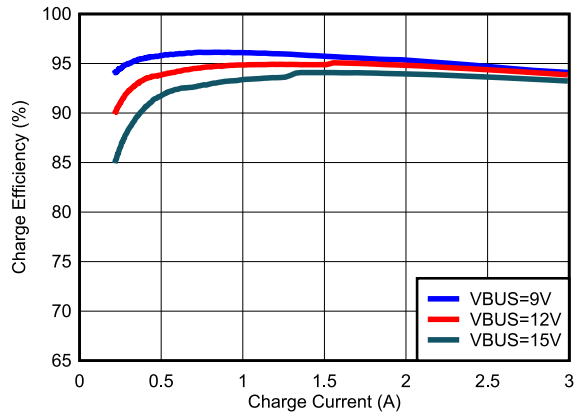

f_{SW} = 1.2 MHz　　Inductance = 2.2 uH
V_{BAT} = 7.6 V　　Inductor DCR = 20 mΩ

図 8-3. 2-Cell Battery Charge Efficiency vs. Charge Current

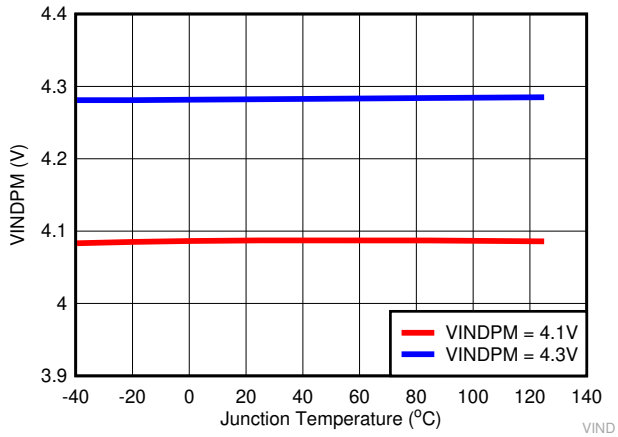

図 8-4. VINDPM vs. Junction Temperature

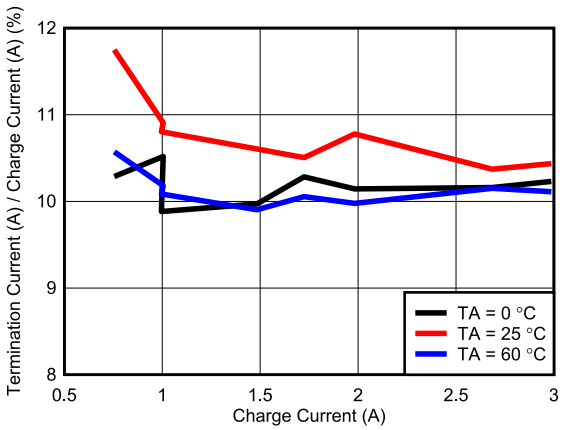

図 8-5. Termination Current as Percentage of Charge Current vs. Charge Current (1-cell)

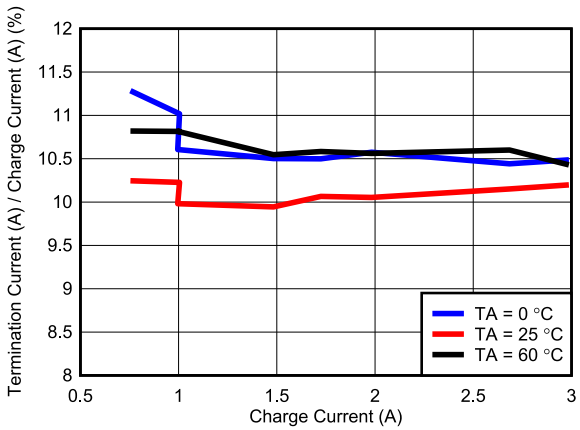

図 8-6. Termination Current as Percentage of Charge Current vs. Charge Current (2-cell)

Copyright © 2023 Texas Instruments Incorporated

8.7 Typical Characteristics (continued)

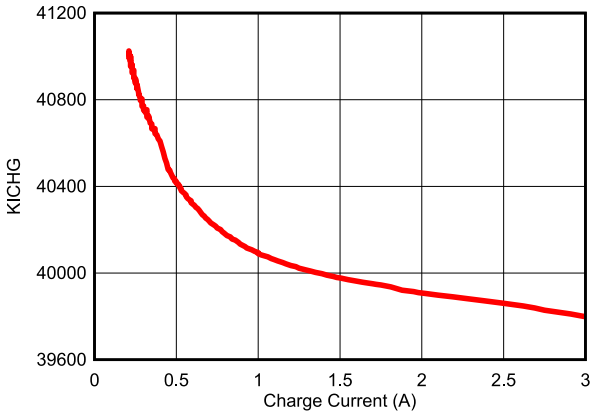

図 8-7. KICHG vs. Charge Current

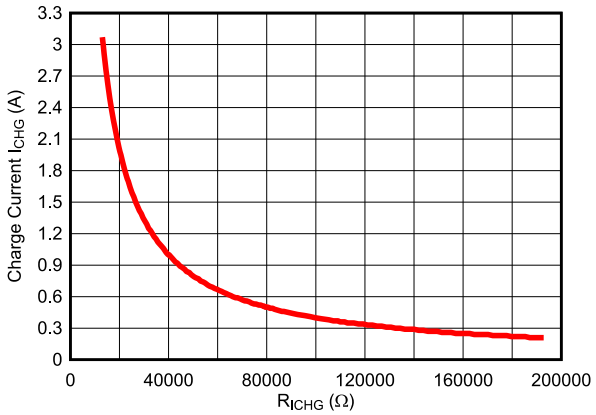

図 8-8. Charge Current vs. Charge Current Setting Resistance RICHG

9 Detailed Description

9.1 Overview

The BQ25306 is a highly integrated standalone single cell and duel cell Li-Ion battery charger for Li-Ion, Li-polymer and LiFePO4 batteries with charge voltage and charge current programmable by external resistors. It includes the input reverse-blocking FET (RBFET, Q1), high-side switching FET (HSFET, Q2), low-side switching FET (LSFET, Q3), bootstrap diode for the high-side gate drive as well as current sensing circuitry.

9.2 Functional Block Diagram

Copyright © 2023 Texas Instruments Incorporated

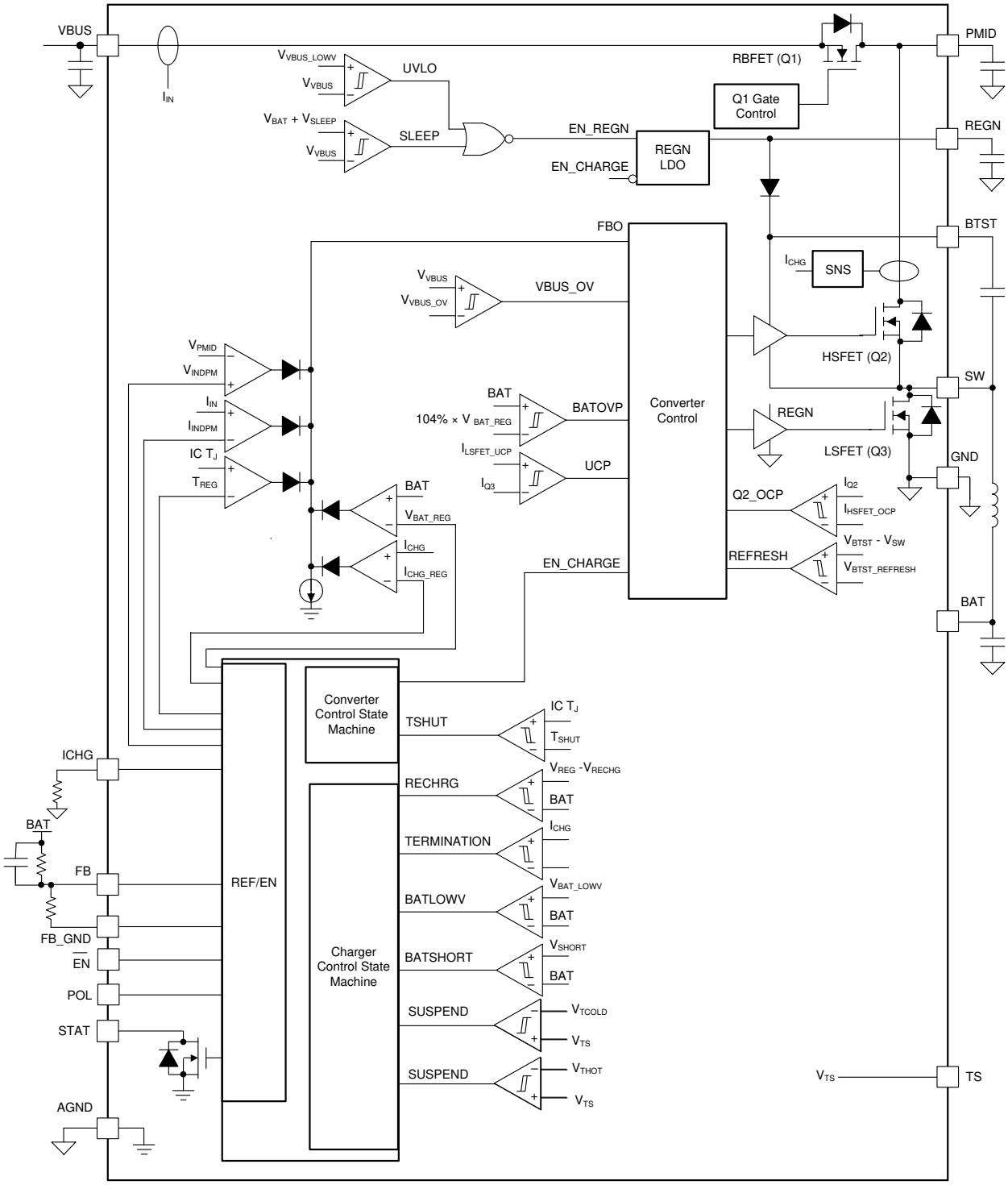
VBUS
IIN
VVBUS_LOWV
VVBUS
UVLO
VBAT + VSLEEP
VVBUS
SLEEP
EN_REGN
EN_CHARGE
REGN LDO
RBFET (Q1)
Q1 Gate Control
PMID
REGN
BTST
FBO
ICHG
SNS
VVBUS
VVBUS_OV
VBUS_OV
HSFET (Q2)
SW
VPMID
VINDPM
IIN
IINDPM
IC TJ
TREG
BAT
104% × V BAT_REG
BATOVP
ILSFET_UCP
IQ3
UCP
Converter Control
REGN
LSFET (Q3)
GND
BAT
VBAT_REG
ICHG
ICHG_REG
Q2_OCP
IQ2
IHSFET_OCP
VBTST - VSW
REFRESH
VBTST_REFRESH
EN_CHARGE
BAT
Converter Control State Machine
TSHUT
IC TJ
TSHUT
ICHG
VREG -VRECHG
RECHRG
BAT
BAT
ICHG
TERMINATION
FB
REF/EN
VBAT_LOWV
BATLOWV
BAT
FB_GND
Charger Control State Machine
VSHORT
BATSHORT
BAT
EN
POL
SUSPEND
VTCOLD
VTS
STAT
SUSPEND
VTHOT
VTS
VTS
TS
AGND

9.3 Feature Description

9.3.1 Device Power Up

The $\overline{EN}$ pin enable or disable the device. When the device is disabled, the device draws minimum current from VBUS pin. The device can be powered up from either VBUS or by enabling the device from $\overline{EN}$ pin.

9.3.1.1 Power-On-Reset (POR)

The $\overline{EN}$ pin can enable or disable the device. When the device is disabled, the device is in disable mode and it draws minimum current at VBUS. When the device is enabled, if VBUS rises above V_{VBUS_UVLOZ}, the device powers part of internal bias and comparators and starts Power on Reset (POR).

9.3.1.2 REGN Regulator Power Up

The internal bias circuits are powered from the input source. The REGN supplies internal bias circuits as well as the HSFET and LSFET gate drive. The REGN also provides voltage rail to STAT LED indication. The REGN is enabled when all the below conditions are valid:

- Chip is enabled by $\overline{EN}$ pin
- V_{VBUS} above V_{VBUS_UVLOZ}
- V_{VBUS} above V_{BAT} + V_{SLEEPZ}
- After sleep comparator deglitch time and REGN delay time

REGN remains on at fault conditions. REGN is powered by VBUS only and REGN is off when VBUS power is removed.

9.3.1.3 Charger Power Up

Following REGN power-up, if there is no fault conditions, the charger powers up with soft start. If there is any fault, the charger will remain off until fault is clear. Any of the fault conditions below gates charger power-up:

- $V_{VBUS} > V_{VBUS_OVP}$
- Thermistor cold/hot fault on TS pin
- $V_{BAT} > V_{BAT_OVP}$
- Safety timer fault
- FB pin is open or short to GND
- ICHG pin is open or short to GND
- Die temperature is above TSHUT

9.3.1.4 Charger Enable and Disable by $\overline{EN}$ Pin

With POL pin floating, the charger can be enabled with $\overline{EN}$ pin pulled low (or floating) or disabled by $\overline{EN}$ pin pulled high. The charger is in disable mode when disabled.

9.3.1.5 Device Unplugged from Input Source

When V_{BUS} is removed from an adaptor, the device stays in HiZ mode and the leakage current from the battery to BAT pin and SW pin is less than $I_{Q_BAT_HIZ}$.

9.3.2 Battery Charging Management

The BQ25306 charges 1-cell or 2-cell Li-Ion battery with up to 3.0-A charge current from up to 17-V input voltage. A new charge cycle starts when the charger power-up conditions are met. The charge voltage programmed by external resistor divider at FB pin and charge current are set by external resistors at ICHG pin. The charger terminates the charging cycle when the charging current is below termination threshold I_{TERM} and charge voltage is above recharge threshold, and device is not in IINDPM or thermal regulation. When a fully charged battery's voltage is discharged below recharge threshold, the device automatically starts a new charging cycle with safety timer reset. To initiate a recharge cycle, the conditions of charger power-up must be met. The STAT pin output indicates the charging status of charging (LOW), charging complete or charge disabled (HIGH) or charging faults (BLINKING).

Copyright © 2023 Texas Instruments Incorporated

9.3.2.1 Battery Charging Profile

The device charges the battery in four phases: battery short, preconditioning, constant current, constant voltage. The fast charge current is set by a resistor ICHG pin. The battery charging profile is shown in the figure. The device charges battery based on charge voltage set by the feedback resister divider from BAT to FB and FB_GND.

表 9-1. Charging Current Setting

MODE	BATTERY VOLTAGE V_{BAT}	CHARGE CURRENT	TYPICAL VALUE
Battery Short	$V_{BAT} < V_{BAT_SHORT}$	I_{BAT_SHORT}	35 mA
Precharge	$V_{BAT_SHORT} < V_{BAT} < V_{BAT_LOWV}$	I_{PRECHG}	10% of I_{CHG} (I_{PRE} > 63mA)
Fast Charge	$V_{BAT_LOWV} < V_{BAT}$	I_{CHG}	Set by ICHG resistor

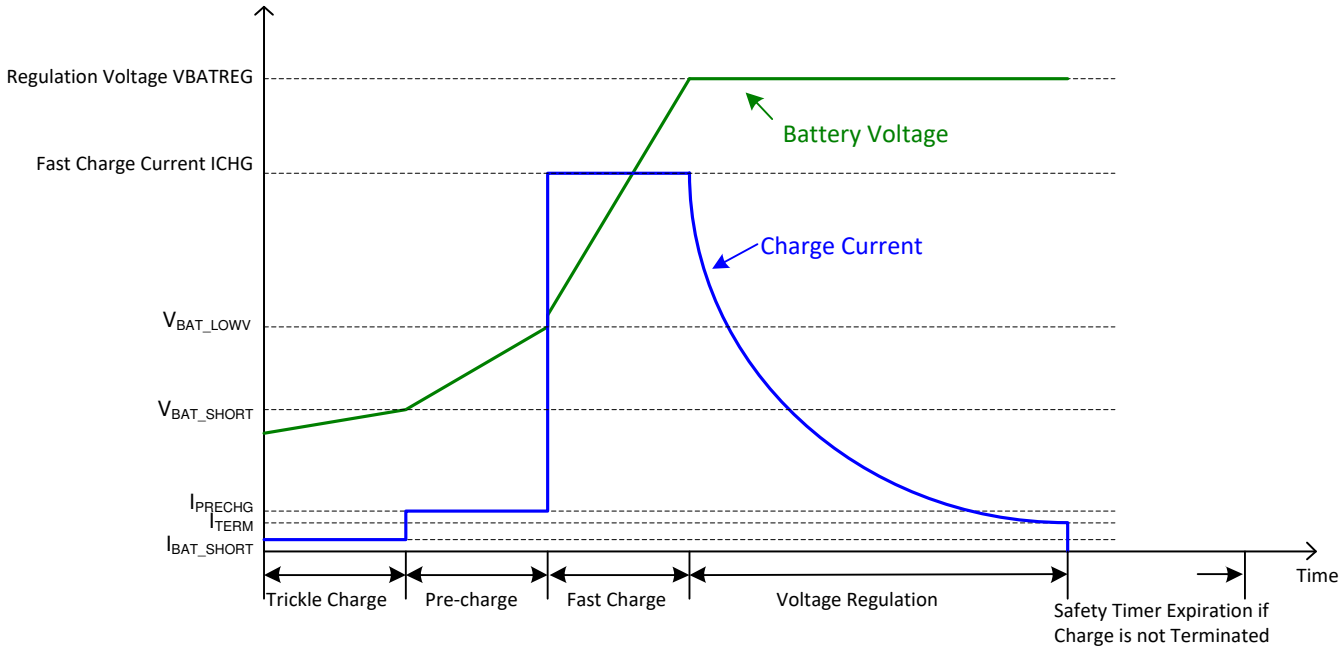

図 9-1. Battery Charging Profile

9.3.2.2 Precharge

The device charges the battery at 10% of set fast charge current in precharge mode. When $R_{ICHG} > R_{ICHG_HIGH}$, the precharge current is clamped at 63mA.

9.3.2.3 Charging Termination

The device terminates a charge cycle when the battery voltage is above recharge threshold and the charge current is below termination current. After a charging cycle is completed, the converter stops swicthing, charge is terminated and the system load is powered from battery. Termination is temporarily disabled when the charger device is in input current regulation or thermal regulation mode and the charging safety timer is counted at half the clock rate. The charge termination current is 10% of set fast charge current if $R_{ICHG} < R_{ICHG_HIGH}$. The termination current is clamped at 63mA if $R_{ICHG} > R_{ICHG_HIGH}$.

9.3.2.4 Battery Recharge

A charge cycle is completed and the charge is terminated, safety time is disabled. If the battery feedback voltage VFB decreases below $V_{FB_REF_RECHG}$, the charger is enabled with safety timer reset and enabled.

9.3.2.5 Charging Safety Timer

The device has built-in safety timer to prevent extended charging cycle due to abnormal battery conditions. The safety timer is 20 hours when the battery voltage is above V_{BAT_LOWV} threshold and 2 hours below V_{BAT_LOWV} threshold. When the safety timer expires, charge is suspended until the safety timer is reset. Safety timer is reset and charge starts under one of the following conditions:

- Battery voltage falls below recharge threshold
- VBUS voltage is recycled
- $\overline{EN}$ pin is toggled
- Battery voltage transits across V_{BAT_SHORT} threshold
- Battery voltage transits across V_{BAT_LOWV} threshold

If the safety timer expires and the battery voltage is above recharge threshold, the charger is suspended and the STAT pin is open. If the safety timer expires and the battery voltage is below the recharge threshold, the charger is suspended and the STAT pin blinks to indicate a fault. The safety timer fault is cleared with safety timer reset.

During input current regulation, thermal regulation, the safety timer counts at half the original clock frequency and the safety timer is doubled. During TS fault, V_{BUS_OVP}, V_{BAT_OVP}, ICHG pin open and short, FB pin fault, and IC thermal shutdown faults, the safety timer is suspended. Once the fault(s) is clear, the safety timer resumes to count.

9.3.2.6 Thermistor Temperature Monitoring

The charger device provides a single thermistor input TS pin for battery temperature monitor. RT1 and RT2 programs the cold temperature T1 and hot temperature T3. In the equations, $R_{NTC,T1}$ is NTC thermistor resistance value at temperature T1 and $R_{NTC,T3}$ is NTC thermistor resistance values at temperature T3. Assuming RHOT = 0, select 0°C to 45°C for battery charge temperature range, then NTC thermistor 103AT-2 resistance $R_{NTC,T1}$ = 27.28 kΩ (at 0°C) and $R_{NTC,T3}$ = 4.91 kΩ (at 45°C), from the 式 1 and 式 2, RT1 and RT2 are derived as:

- RT1 = 4.527 kΩ
- RT2 = 23.26 kΩ

On top of the calculation results, adding RHOT resisitor can shift HOT temperature T3 up and only slightly shift up COLD temperature T1. The actual temperature T3 can be looked up in a NTC resistance table based on ($R_{NTC,T3}$ - RHOT) and T1 can be looked up in a NTC resistance table based on ($R_{NTC,T1}$ - RHOT). Because $R_{NTC,T1}$ is much higher than $R_{NTC,T3}$, RHOT can adjust HOT temperature significantly with mimimal affect on COLD temperature. RHOT is optional.

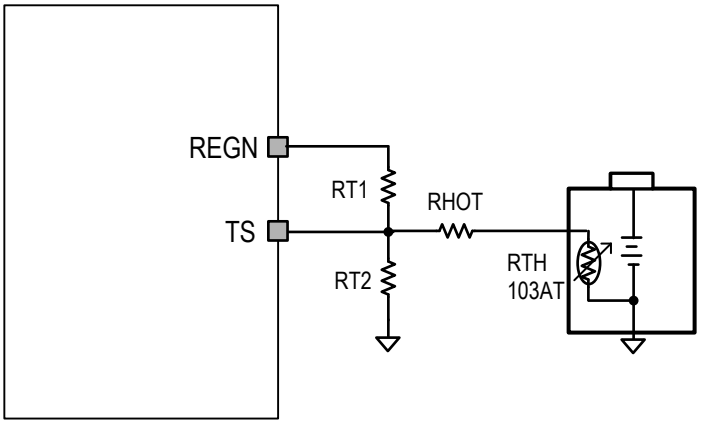

図 9-2. Battery Temperature Sensing Circuit

Copyright © 2023 Texas Instruments Incorporated

$$RT2 = \frac{R_{NTC,T1} \times R_{NTC,T3} \times \left(\frac{1}{V_{T3}\%} - \frac{1}{V_{T1}\%}\right)}{R_{NTC,T1} \times \left(\frac{1}{V_{T1}\%} - 1\right) - R_{NTC,T3} \times \left(\frac{1}{V_{T3}\%} - 1\right)} \quad (1)$$

$$RT1 = \frac{\frac{1}{V_{T1}\%} - 1}{\frac{1}{R_{T2}} + \frac{1}{R_{NTC,T1}}} \quad (2)$$

9.3.3 Charging Status Indicator (STAT)

The device indicates charging state on the open drain STAT pin. The STAT pin can drive a LED that is pulled up to REGN rail through a current limit resistor.

表 9-2. STAT Pin State

CHARGING STATE	STAT INDICATOR
Charging in progress (including recharge)	LOW
Charging complete	HIGH
HiZ mode, sleep mode, charge disable	HIGH
Safety timer expiration with battery voltage above recharge threshold	HIGH
Charge faults: 1. VBUS input over voltage 2. TS cold/hot faults 3. Battery over voltage 4. IC thermal shutdown 5. Safety timer expiration with battery voltage below recharge threshold 6. ICHG pin open or short 7. FB pin open or short	BLINKING at 1 Hz with 50% duty cycle

9.3.4 Protections

9.3.4.1 Voltage and Current Monitoring

The device closely monitors the input voltage and input current for safe operation.

9.3.4.1.1 Input Over-Voltage Protection

This device integrates the functionality of an input over-voltage protection (OVP). The input OVP threshold is $V_{VBUS_OVP_RISE}$. During an input over-voltage event, the converter stops switching and safety timer stops counting as well. The converter resumes switching and the safety timer resumes counting once the VBUS voltage drops back below ($V_{VBUS_OVP_RISE}$ - $V_{VBUS_OVP_HYS}$). The REGN LDO remains on during an input over-voltage event. The STAT pin blinks during an input OVP event.

9.3.4.1.2 Input Voltage Dynamic Power Management (VINDPM)

When the input current of the device exceeds the current capability of the power supply, the charger device regulates PMID voltage by reducing charge current to avoid crashing the input power supply. VINDPM dynamically tracks the battery voltage. The actual VINDPM is the higher of V_{INDPM_MIN} and (1.044*VBAT + 125mV).

9.3.4.1.3 Input Current Limit

The device has built-in input current limit. When the input current is over the threshold I_{INDPM}, the converter duty cycle is reduced to reduce input current.

9.3.4.1.4 Cycle-by-Cycle Current Limit

High-side (HS) FET current is cycle-by-cycle limited. Once the HSFET peak current hits the limit I_{HSFET_OCP}, the HSFET shuts down until the current is reduced below a threshold.

9.3.4.2 Thermal Regulation and Thermal Shutdown

The device monitors the junction temperature T_J to avoid overheating the chip and limit the device surface temperature. When the internal junction temperature exceeds thermal regulation limit T_{REG}, the device lowers down the charge current. During thermal regulation, the average charging current is usually below the programmed battery charging current. Therefore, termination is disabled and the safety timer runs at half the clock rate.

Additionally, the device has thermal shutdown built in to turn off the charger when device junction temperature exceeds T_{SHUT} rising threshold. The charger is reenabled when the junction temperature is below T_{SHUT} falling threshold. During thermal shutdown, the safety timer stops counting and it resumes when the temperature drops below the threshold.

9.3.4.3 Battery Protection

9.3.4.3.1 Battery Over-Voltage Protection (V_{BAT_OVP})

The battery voltage is clamped at above the battery regulation voltage. When the battery voltage is over $V_{BAT_OVP_RISE}$, the converter stops switching until the battery voltage is below the falling threshold. During a battery over-voltage event, the safety timer stops counting and STAT pin reports the fault and it resumes once the battery voltage falls below the falling threshold. A 7-mA pull-down current is on the BAT pin once BAT_OVP is triggered. BAT_OVP may be triggered in charging mode, termination mode, and fault mode.

9.3.4.3.2 Battery Short Circuit Protection

When the battery voltage falls below the V_{BAT_SHORT} threshold, the charge current is reduced to I_{BAT_SHORT}.

9.3.4.4 ICHG Pin Open and Short Protection

To protect against ICHG pin is short or open, the charger immediately shuts off once ICHG pin is open or short to GND and STAT pin blinks to report the fault. At powerup, if ICHG pin is detected open or short to GND, the charge will not power up until the fault is clear.

9.4 Device Functional Modes

9.4.1 Disable Mode, HiZ Mode, Sleep Mode, Charge Mode, Termination Mode, and Fault Mode

The device operates in different modes depending on VBUS voltage, battery voltage, and $\overline{EN}$ pin, POL pin, ICHG pin and FB pin connection.The functional modes are listed in the following table.

表 9-3. Device Functional Modes

MODE	CONDITIONS	REGN LDO	CHARGE ENABLED	STAT PIN
Disable Mode	Device is disabled, POL floating, $\overline{EN}$ = 1	OFF	NO	OPEN
HiZ Mode	Device is enabled and $V_{VBUS} < V_{VBUS_UVLOZ}$	OFF	NO	OPEN
Sleep Mode	Device is enabled and $V_{VBUS} > V_{VBUS_UVLOZ}$ and $V_{VBUS} < V_{BAT} + V_{SLEEPZ}$	OFF	NO	OPEN
Charge Mode	Device is enabled, $V_{VBUS} > V_{VBUS_LOWV}$ and $V_{VBUS} > V_{BAT} + V_{SLEEPZ}$, no faults, charge is not terminated	ON	YES	SHORT to GND
Charge Termination Mode	$V_{VBUS} > V_{VBUS_LOWV}$ and $V_{VBUS} > V_{BAT} + V_{SLEEPZ}$ and device is enabled, no faults, charge is terminated	ON	NO	OPEN
Fault Mode	V_{BUS_OVP}, TS cold/hot, V_{BAT_OVP}, IC thermal shutdown, safety timer fault, ICHG pin open or short, FB pin open or short	ON	NO	BLINKING

Copyright © 2023 Texas Instruments Incorporated

10 Application and Implementation

注

以下のアプリケーション情報は、TI の製品仕様に含まれるものではなく、TI ではその正確性または完全性を保証いたしません。個々の目的に対する製品の適合性については、お客様の責任で判断していただくことになります。お客様は自身の設計実装を検証しテストすることで、システムの機能を確認する必要があります。

10.1 Application Information

A typical application consists of a single cell or dual cell battery charger for Li-Ion, Li-polymer and LiFePO4 batteries used in a wide range of portable devices and accessories. It integrates an input reverse-block FET (RBFET, Q1), high-side switching FET (HSFET, Q2), and low-side switching FET (LSFET, Q3). The Buck converter output is connected to the battery directly to charge the battery and power system loads. The device also integrates a bootstrap diode for high-side gate drive.

10.2 Typical Applications

The typical applications in this section include a standalone charger without power path, a standalone charger with external power path, and a typical application with MCU programmed charge current.

10.2.1 Typical Application

The typical application in this section includes a standalone charger without power path.

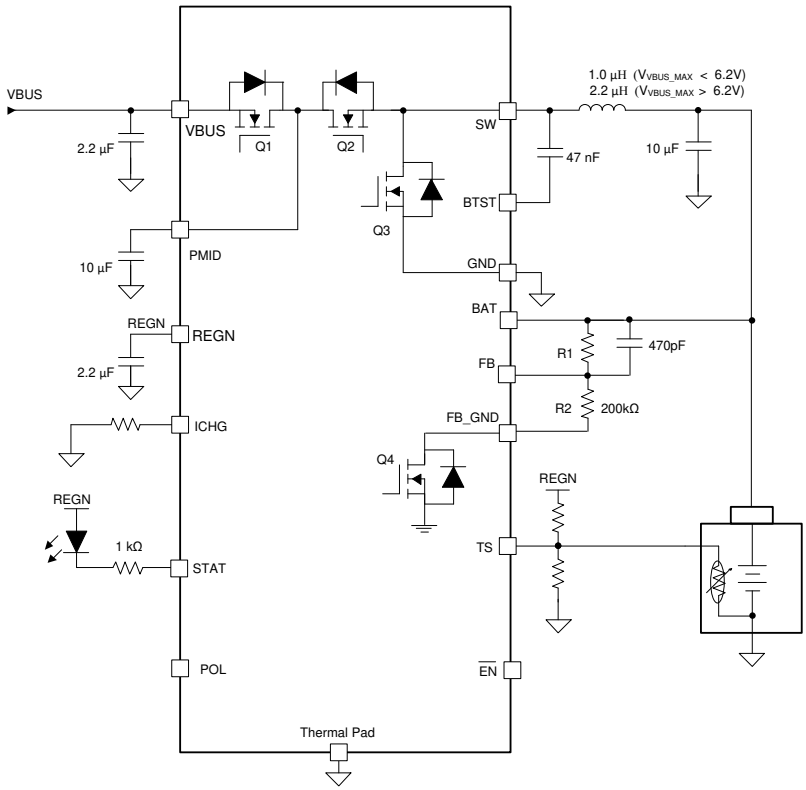

図 10-1. Typical Application Diagram
(1-µH inductor is recommended if maximum input voltage V_{VBUS_MAX} < 6.2V; 2.2-µH inductor is recommended if maximum input voltage V_{VBUS_MAX} > 6.2V)

10.2.1.1 Design Requirements

表 10-1. Design Requirements

PARAMETER	VALUE
Input Voltage	4.1V to 17V
Input Current	3.0A
Fast Charge Current	3.0A
Battery Regulation Voltage	3.4 V – 9.0 V

10.2.1.2 Detailed Design Procedure

10.2.1.2.1 Charge Voltage Settings

Battery charge voltage is set by a resister divider. The battery charge voltage is programmed as VREG = 1.1(1+R1/R2). R1 is a high side resistor from BAT to FB pin and R2 is a low side resister from FB to FB_GND. The recommended resistance of R2 is 200 kΩ or lower. 1% or higher accuracy of resistors is needed for R1 and R2 resisitors. For a 1-cell 4.2-V battery, R1 = 562 kΩ and R2 = 200 kΩ are recommended; For a 2-cell 8.4-V battery, R1 = 1.33MΩ and R2 = 200 kΩ are recommded.

10.2.1.2.2 Charge Current Setting

The charger current is set by the resistor value at the ICHG pin according to the equation below:

I_{CHG} (A) = K_{ICHG} (A·Ω) / R_{ICHG}(Ω)

Copyright © 2023 Texas Instruments Incorporated

K_{ICHG} is a coefficient that is listed in Electrical Characteristics table and R_{ICHG} is the resistor value from ICHG pin to GND. K_{ICHG} is typically 40,000 (A·Ω) and it is slightly shifted up at lower charge current setting. The K_{ICHG} vs. ICHG typical characteresitc curve is shown in 図 8-7.

10.2.1.2.3 Inductor Selection

The 1.2-MHz switching frequency allows the use of small inductor and capacitor values. Inductance value is selected based on maximum input voltage V_{VBUS_MAX} in applications. 1-µH inductor is recommended if V_{VBUS_MAX} < 6.2V and 2.2-µH inductor is recommended if V_{VBUS_MAX} > 6.2V for either 1-cell or 2-cell battery charge. An inductor saturation current I_{SAT}should be higher than the charging curren I_{CHG} plus half the ripple current I_{RIPPLE}:

$$I_{SAT} \geq I_{CHG} + (1/2)\, I_{RIPPLE} \tag{3}$$

The inductor ripple current I_{RIPPLE} depends on the input voltage (V_{VBUS}), the duty cycle ($D = V_{BAT}/V_{VBUS}$), the switching frequency (f_S) and the inductance (L).

$$I_{RIPPLE} = \frac{V_{IN} \times D \times (1 - D)}{fs \times L} \tag{4}$$

The maximum inductor ripple current occurs when the duty cycle (D) is 0.5 or approximately 0.5.

10.2.1.2.4 Input Capacitor

Design input capacitance to provide enough ripple current rating to absorb the input switching ripple current. Worst case RMS ripple current is half of the charging current when the duty cycle is 0.5. If the converter does not operate at 50% duty cycle, then the worst case capacitor RMS current I_{Cin} occurs where the duty cycle is closest to 50% and can be estimated using 式 5.

$$I_{CIN} = I_{CHG} \times \sqrt{D \times (1 - D)} \tag{5}$$

A low ESR ceramic capacitor such as X7R or X5R is preferred for the input decoupling capacitor and should be placed as close as possible to the drain of the high-side MOSFET and source of the low-side MOSFET. The voltage rating of the capacitor must be higher than the normal input voltage level. A rating of 25-V or higher capacitor is preferred for 15-V input voltage.

10.2.1.2.5 Output Capacitor

Ensure that the output capacitance has enough ripple current rating to absorb the output switching ripple current. The equation below shows the output capacitor RMS current I_{COUT} calculation.

$$I_{COUT} = \frac{I_{RIPPLE}}{2 \times \sqrt{3}} \approx 0.29 \times I_{RIPPLE} \tag{6}$$

The output capacitor voltage ripple can be calculated as follows:

$$\Delta V_O = \frac{V_{OUT}}{8LCfs^2}\left(1 - \frac{V_{OUT}}{V_{IN}}\right) \tag{7}$$

At certain input and output voltage and switching frequency, the voltage ripple can be reduced by increasing the output filter LC.

10.2.1.3 Application Curves

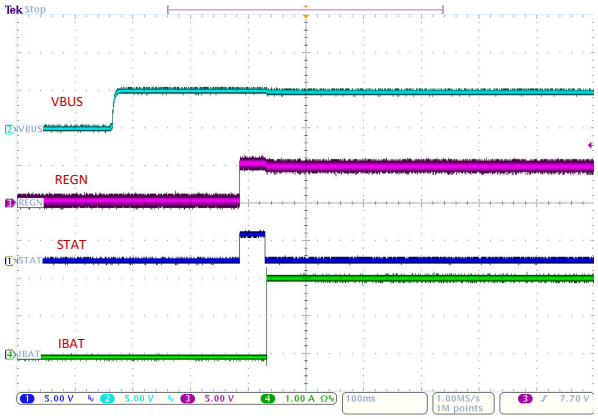

VBUS = 5 V
ICHG = 2A
Device Enabled

図 10-2. Power Up from VBUS

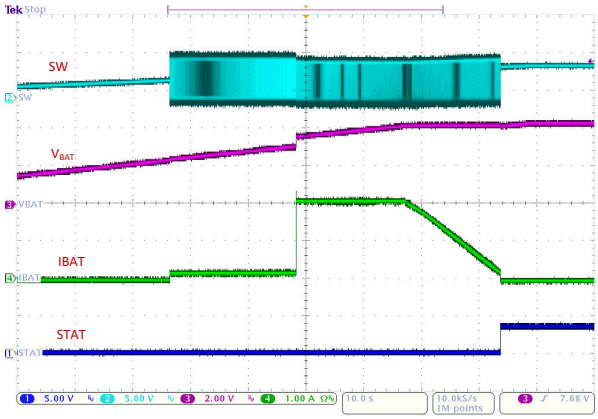

VBUS = 5 V
ICHG = 2 A
VBAT = 1.5V - 4.2V
VBATREG = 4.2V

図 10-3. Charge Cycle

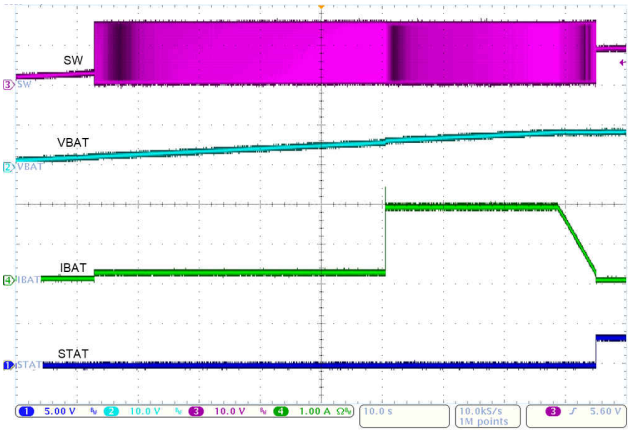

VBUS = 15 V
ICHG = 2 A
VBAT = 1.5V - 8.8V
VBATREG = 8.4V

図 10-4. Charge Cycle

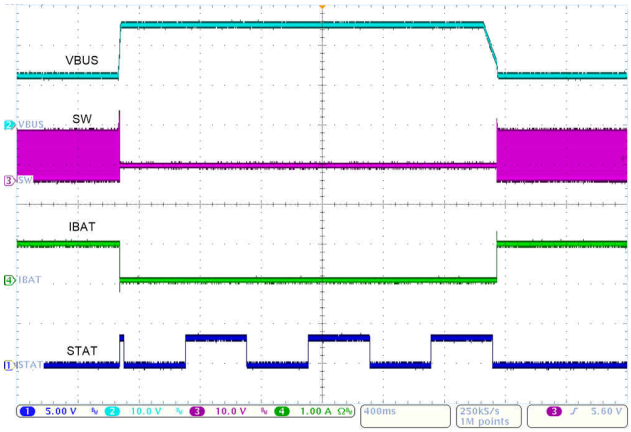

VBUS = 12V -25V -12V
ICHG = 1A
VBAT = 3.8V

図 10-5. VBUS Over Voltage Protection

Copyright © 2023 Texas Instruments Incorporated

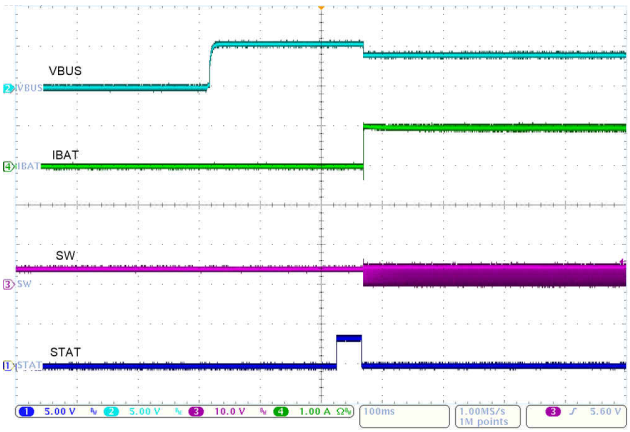

VBUS = 5 V
ICHG = 2A
Adaptor Currrent Limit: 1A
VBAT = 3.5V

図 10-6. VBUS startup into VINDPM

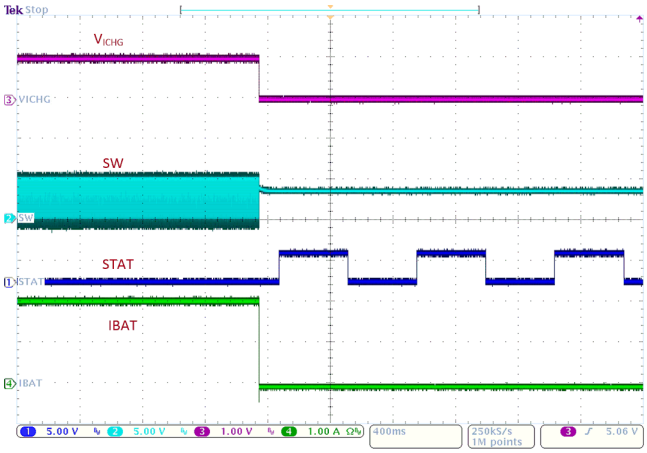

VBUS = 5 V
From ICHG = 2A to ICHG pin short

図 10-7. ICHG Pin Short Circuit Protection

10.2.2 Typical Application with External Power Path

In the case where a system needs to be immediately powered up from VBUS when the battery is overdischarged or dead, the application circuit shown in 図 10-8 can be used to provide a power path from VBUS/PMID to VSYS. PFET Q4 is an external PFET that turns on to supply VSYS from the battery when VBUS is removed; PFET Q4 turns off when VBUS is plugged in and VSYS is supplied from VBUS/PMID.

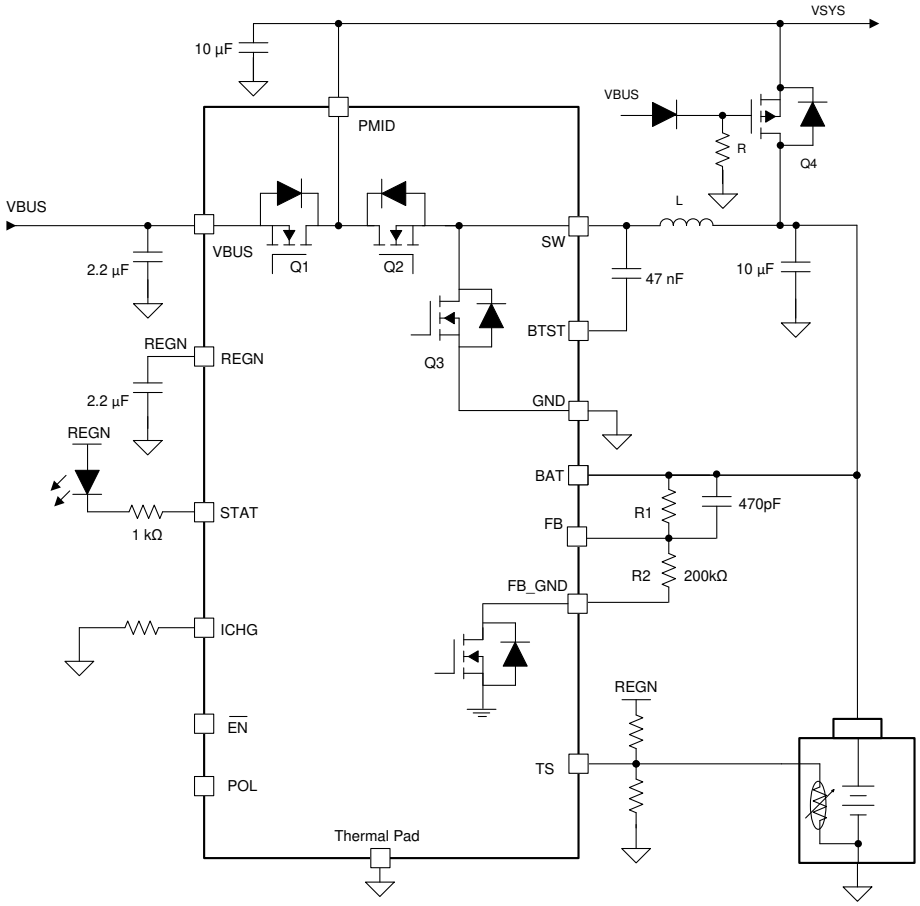

図 10-8. Typical Application Diagram with Power Path (1-µH inductor is recommended if maximum input voltage V_{VBUS_MAX} < 6.2V; 2.2-µH inductor is recommended if maximum input voltage V_{VBUS_MAX} > 6.2V)

10.2.2.1 Design Requirements

For design requirements, see セクション 10.2.1.1.

Copyright © 2023 Texas Instruments Incorporated

10.2.3 Typical Application with MCU Programmable Charge Current

In some application cases, the charge current needs to be controlled by a MCU. In those cases, the GPIOs of the MCU can be used for on/off control of the charge current setting resistors R_{ICHG1} and R_{ICHG2} as shown in 図 10-9. With GPIO1 and GPIO2 on/off control, three levels of charge current can be programmed. If the charge current needs to be controlled smoothly in a wide range, a PWM output of the MCU can be used to generate an average DC voltage output to program the charge current as show in 図 10-10. The charge current can be calculated as: $(1V - V_{PWM}) / (R_{ICHG1} + R_{ICHG2})$. V_{PWM} is the averaged DC voltage of the PWM output and it must be lower than 1 V. The regulated voltage at the ICHG pin is 1 V.

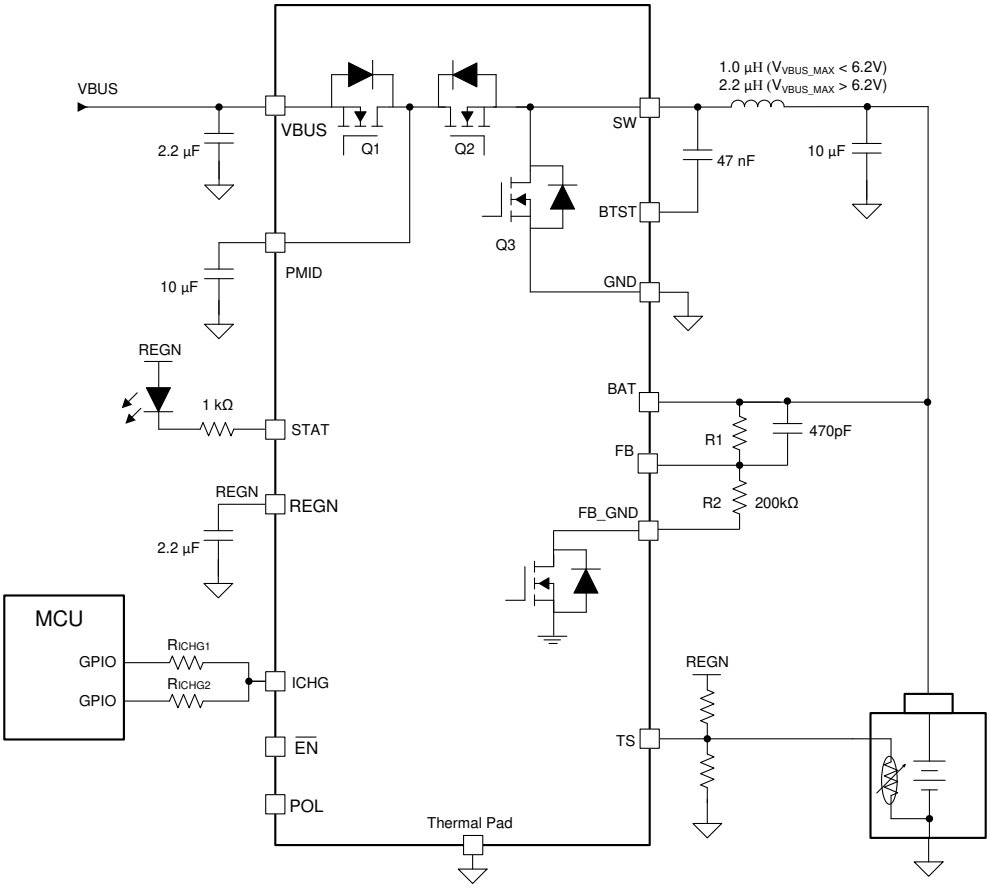

図 10-9. Typical Application with MCU Programmed Charge Current (1-µH inductor is recommended if maximum input voltage V_{VBUS_MAX} < 6.2V; 2.2-µH inductor is recommended if maximum input voltage V_{VBUS_MAX} > 6.2V)

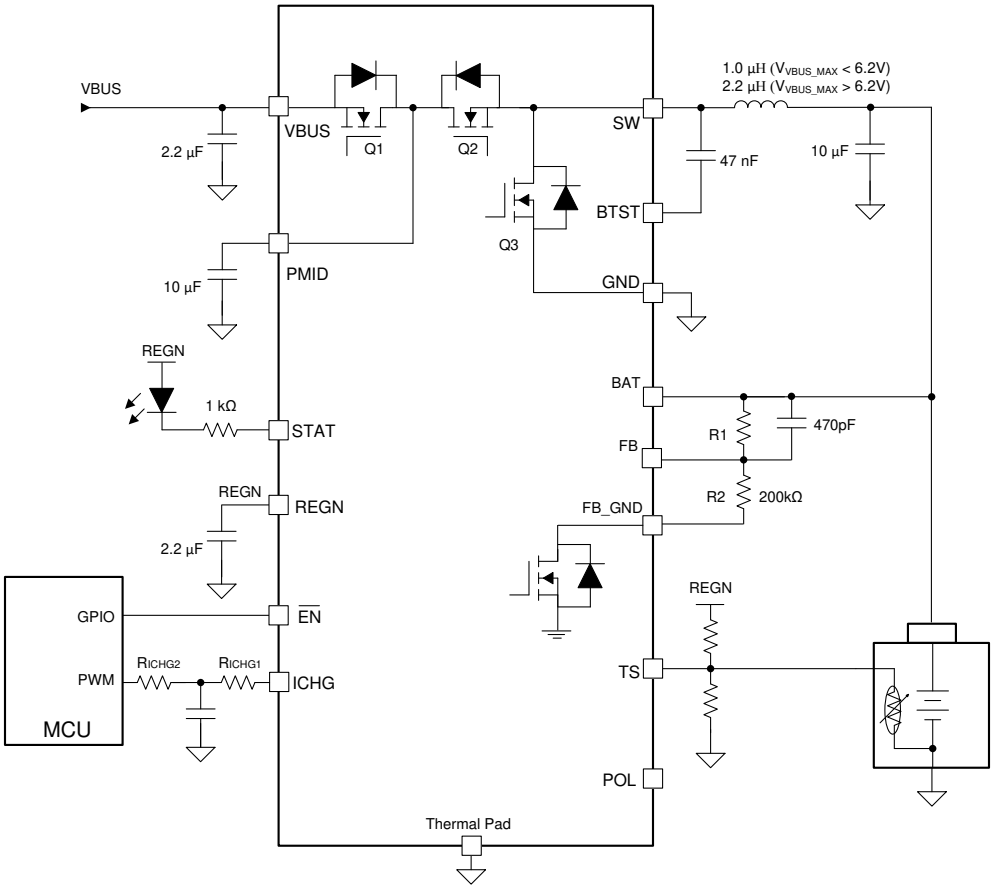

図 10-10. Typical Application with MCU Programmed Charge Current (1-µH inductor is recommended if maximum input voltage V_{VBUS_MAX} < 6.2V; 2.2-µH inductor is recommended if maximum input voltage V_{VBUS_MAX} > 6.2V)

10.2.3.1 Design Requirements

For design requirements, see セクション 10.2.1.1.

Copyright © 2023 Texas Instruments Incorporated

11 Power Supply Recommendations

In order to provide an output voltage on the BAT pin, the device requires a power supply between 4.1 V and 17 V single-cell or dual-cell Li-Ion battery with positive terminal connected to BAT. The source current rating needs to be at least 3 A in order for the buck converter to provide maximum output power to BAT or the system connected to BAT pin.

Copyright © 2023 Texas Instruments Incorporated

12 Layout

12.1 Layout Guidelines

The switching node rise and fall times should be minimized for minimum switching loss. Proper layout of the components to minimize high frequency current path loop (see 図 12-1) is important to prevent electrical and magnetic field radiation and high frequency resonant problems. Follow this specific order carefully to achieve the proper layout.

- Place input capacitor as close as possible to PMID pin and use shortest thick copper trace to connect input capacitor to PMID pin and GND plane.
- It is critical that the exposed thermal pad on the backside of the device be soldered to the PCB ground. Ensure that there are sufficient thermal vias directly under the IC, connecting to the ground plane on the other layers. Connect the GND pins to thermal pad on the top layer.
- Put output capacitor near to the inductor output terminal and the charger device. Ground connections need to be tied to the IC ground with a short copper trace or GND plane
- Place inductor input terminal to SW pin as close as possible and limit SW node copper area to lower electrical and magnetic field radiation. Do not use multiple layers in parallel for this connection. Minimize parasitic capacitance from this area to any other trace or plane.
- Route analog ground separately from power ground if possible. Connect analog ground and power ground together using thermal pad as the single ground connection point under the charger device. It is acceptable to connect all grounds to a single ground plane if multiple ground planes are not available.
- Decoupling capacitors should be placed next to the device pins and make trace connection as short as possible.
- For high input voltage and high charge current applications, sufficient copper area on GND should be budgeted to dissipate heat from power losses.
- Ensure that the number and sizes of vias allow enough copper for a given current path
- See the 2 layer PCB design example in 図 12-2 for the recommended component placement with trace, grounding and via locations.

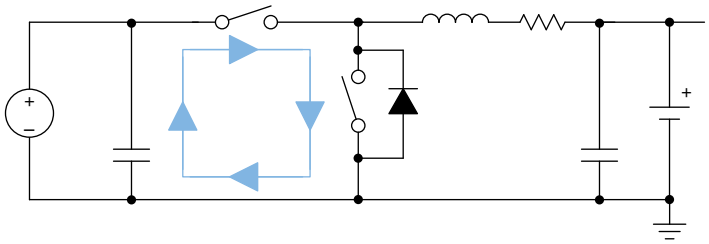

図 12-1. High Frequency Current Path

12.2 Layout Example

The device pinout and component count are optimized for a 2 layer PCB design. The 2-layer PCB layout example is shown in 図 12-2.

Copyright © 2023 Texas Instruments Incorporated

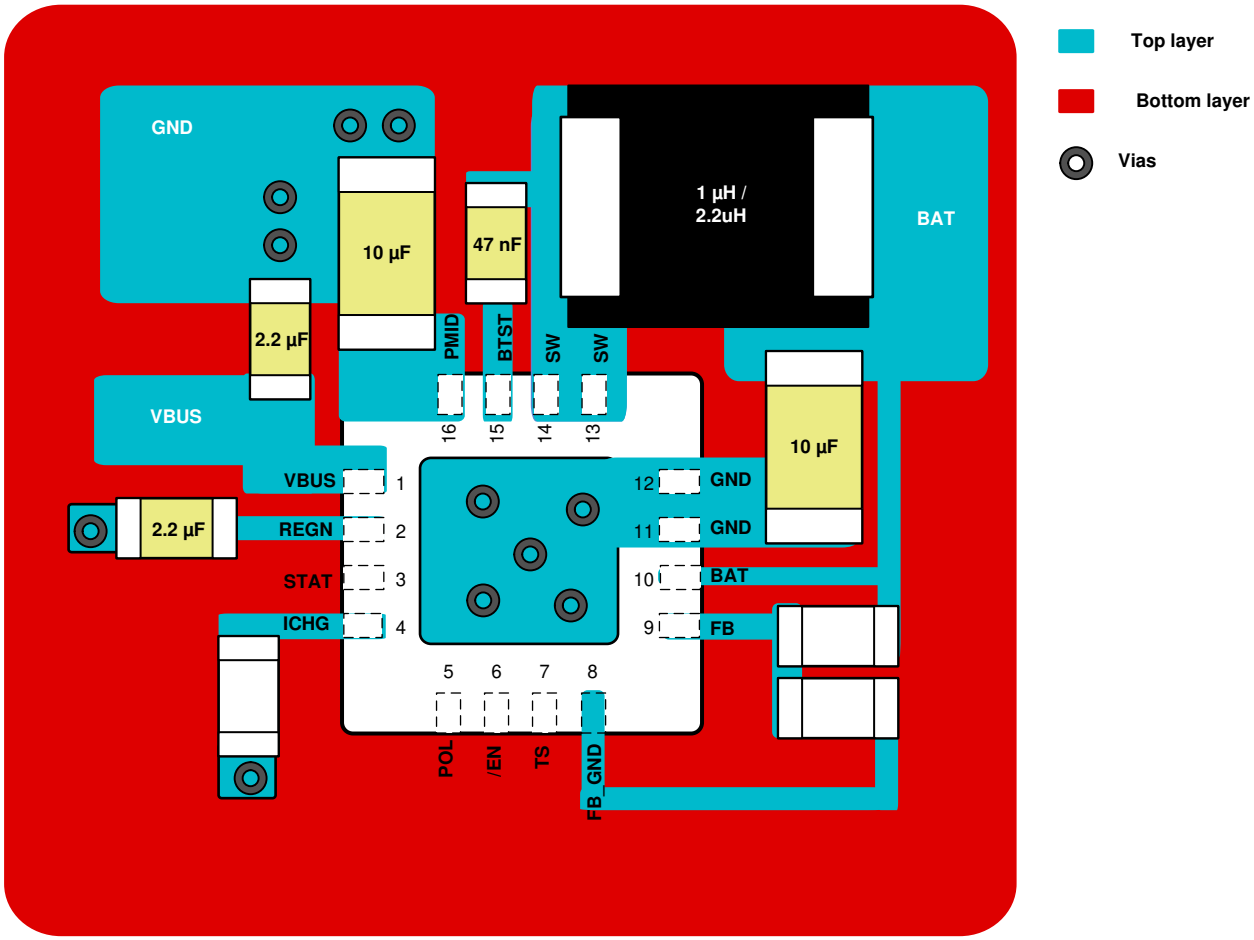

図 12-2. Layout Example

13 Device and Documentation Support

13.1 Device Support

13.1.1 サード・パーティ製品に関する免責事項

サード・パーティ製品またはサービスに関するテキサス・インスツルメンツの出版物は、単独またはテキサス・インスツルメンツの製品、サービスと一緒に提供される場合に関係なく、サード・パーティ製品またはサービスの適合性に関する是認、サード・パーティ製品またはサービスの是認の表明を意味するものではありません。

13.2 Documentation Support

13.2.1 Related Documentation

For related documentation see the following: *BQ25306 Evaluation Module User's Guide*

13.3 ドキュメントの更新通知を受け取る方法

ドキュメントの更新についての通知を受け取るには、ti.com のデバイス製品フォルダを開いてください。*「更新の通知を受け取る」をクリック*して登録すると、変更されたすべての製品情報に関するダイジェストを毎週受け取れます。変更の詳細については、修正されたドキュメントに含まれている改訂履歴をご覧ください。

13.4 サポート・リソース

TI E2E™ サポート・フォーラムは、エンジニアが検証済みの回答と設計に関するヒントをエキスパートから迅速かつ直接得ることができる場所です。既存の回答を検索したり、独自の質問をしたりすることで、設計で必要な支援を迅速に得ることができます。

リンクされているコンテンツは、該当する貢献者により、現状のまま提供されるものです。これらは TI の仕様を構成するものではなく、必ずしも TI の見解を反映したものではありません。TI の使用条件を参照してください。

13.5 Trademarks

TI E2E™ is a trademark of Texas Instruments.
すべての商標は、それぞれの所有者に帰属します。

13.6 静電気放電に関する注意事項

この IC は、ESD によって破損する可能性があります。テキサス・インスツルメンツは、IC を取り扱う際には常に適切な注意を払うことを推奨します。正しい ESD 対策をとらないと、デバイスを破損するおそれがあります。

ESD による破損は、わずかな性能低下からデバイスの完全な故障まで多岐にわたります。精密な IC の場合、パラメータがわずかに変化するだけで公表されている仕様から外れる可能性があるため、破損が発生しやすくなっています。

13.7 用語集

TI 用語集　　この用語集には、用語や略語の一覧および定義が記載されています。

Copyright © 2023 Texas Instruments Incorporated

14 Mechanical, Packaging, and Orderable Information

The following pages include mechanical, packaging, and orderable information. This information is the most current data available for the designated devices. This data is subject to change without notice and revision of this document. For browser-based versions of this data sheet, refer to the left-hand navigation.

PACKAGING INFORMATION

Orderable part number	Status (1)	Material type (2)	Package | Pins	Package qty | Carrier	RoHS (3)	Lead finish/ Ball material (4)	MSL rating/ Peak reflow (5)	Op temp (°C)	Part marking (6)
BQ25306RTER	Active	Production	WQFN (RTE) | 16	3000 | LARGE T&R	Yes	NIPDAU	Level-1-260C-UNLIM	-40 to 85	B25306
BQ25306RTER.A	Active	Production	WQFN (RTE) | 16	3000 | LARGE T&R	Yes	NIPDAU	Level-1-260C-UNLIM	-40 to 85	B25306
BQ25306RTER.B	Active	Production	WQFN (RTE) | 16	3000 | LARGE T&R	Yes	NIPDAU	Level-1-260C-UNLIM	-40 to 85	B25306
BQ25306RTERG4	Active	Production	WQFN (RTE) | 16	3000 | LARGE T&R	Yes	NIPDAU	Level-1-260C-UNLIM	-40 to 85	B25306
BQ25306RTERG4.A	Active	Production	WQFN (RTE) | 16	3000 | LARGE T&R	Yes	NIPDAU	Level-1-260C-UNLIM	-40 to 85	B25306
BQ25306RTERG4.B	Active	Production	WQFN (RTE) | 16	3000 | LARGE T&R	Yes	NIPDAU	Level-1-260C-UNLIM	-40 to 85	B25306

(1) **Status:** For more details on status, see our product life cycle.

(2) **Material type:** When designated, preproduction parts are prototypes/experimental devices, and are not yet approved or released for full production. Testing and final process, including without limitation quality assurance, reliability performance testing, and/or process qualification, may not yet be complete, and this item is subject to further changes or possible discontinuation. If available for ordering, purchases will be subject to an additional waiver at checkout, and are intended for early internal evaluation purposes only. These items are sold without warranties of any kind.

(3) **RoHS values:** Yes, No, RoHS Exempt. See the TI RoHS Statement for additional information and value definition.

(4) **Lead finish/Ball material:** Parts may have multiple material finish options. Finish options are separated by a vertical ruled line. Lead finish/Ball material values may wrap to two lines if the finish value exceeds the maximum column width.

(5) **MSL rating/Peak reflow:** The moisture sensitivity level ratings and peak solder (reflow) temperatures. In the event that a part has multiple moisture sensitivity ratings, only the lowest level per JEDEC standards is shown. Refer to the shipping label for the actual reflow temperature that will be used to mount the part to the printed circuit board.

(6) **Part marking:** There may be an additional marking, which relates to the logo, the lot trace code information, or the environmental category of the part.

Multiple part markings will be inside parentheses. Only one part marking contained in parentheses and separated by a "~" will appear on a part. If a line is indented then it is a continuation of the previous line and the two combined represent the entire part marking for that device.

Important Information and Disclaimer: The information provided on this page represents TI's knowledge and belief as of the date that it is provided. TI bases its knowledge and belief on information provided by third parties, and makes no representation or warranty as to the accuracy of such information. Efforts are underway to better integrate information from third parties. TI has taken and continues to take reasonable steps to provide representative and accurate information but may not have conducted destructive testing or chemical analysis on incoming materials and chemicals. TI and TI suppliers consider certain information to be proprietary, and thus CAS numbers and other limited information may not be available for release.

In no event shall TI's liability arising out of such information exceed the total purchase price of the TI part(s) at issue in this document sold by TI to Customer on an annual basis.

TAPE AND REEL INFORMATION

REEL DIMENSIONS

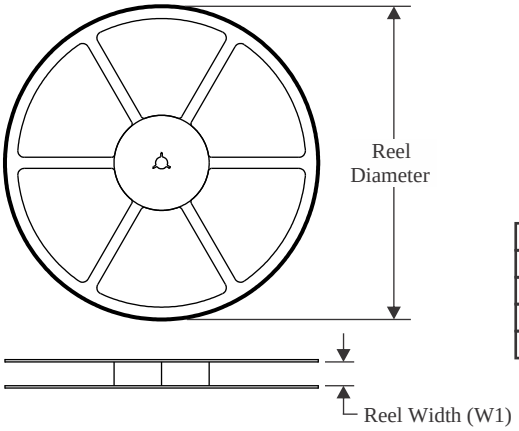

TAPE DIMENSIONS

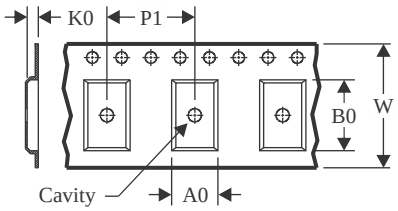

A0	Dimension designed to accommodate the component width
B0	Dimension designed to accommodate the component length
K0	Dimension designed to accommodate the component thickness
W	Overall width of the carrier tape
P1	Pitch between successive cavity centers

QUADRANT ASSIGNMENTS FOR PIN 1 ORIENTATION IN TAPE

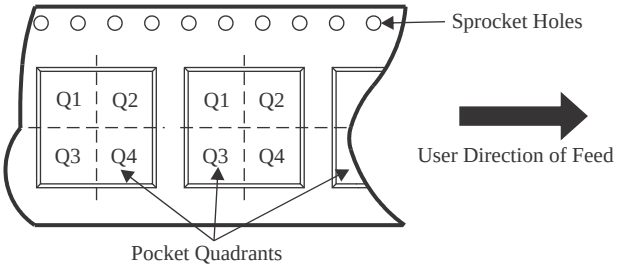

*All dimensions are nominal

Device	Package Type	Package Drawing	Pins	SPQ	Reel Diameter (mm)	Reel Width W1 (mm)	A0 (mm)	B0 (mm)	K0 (mm)	P1 (mm)	W (mm)	Pin1 Quadrant
BQ25306RTER	WQFN	RTE	16	3000	330.0	12.4	3.3	3.3	1.1	8.0	12.0	Q2
BQ25306RTER	WQFN	RTE	16	3000	330.0	12.4	3.3	3.3	1.1	8.0	12.0	Q2
BQ25306RTERG4	WQFN	RTE	16	3000	330.0	12.4	3.3	3.3	1.1	8.0	12.0	Q2

TAPE AND REEL BOX DIMENSIONS

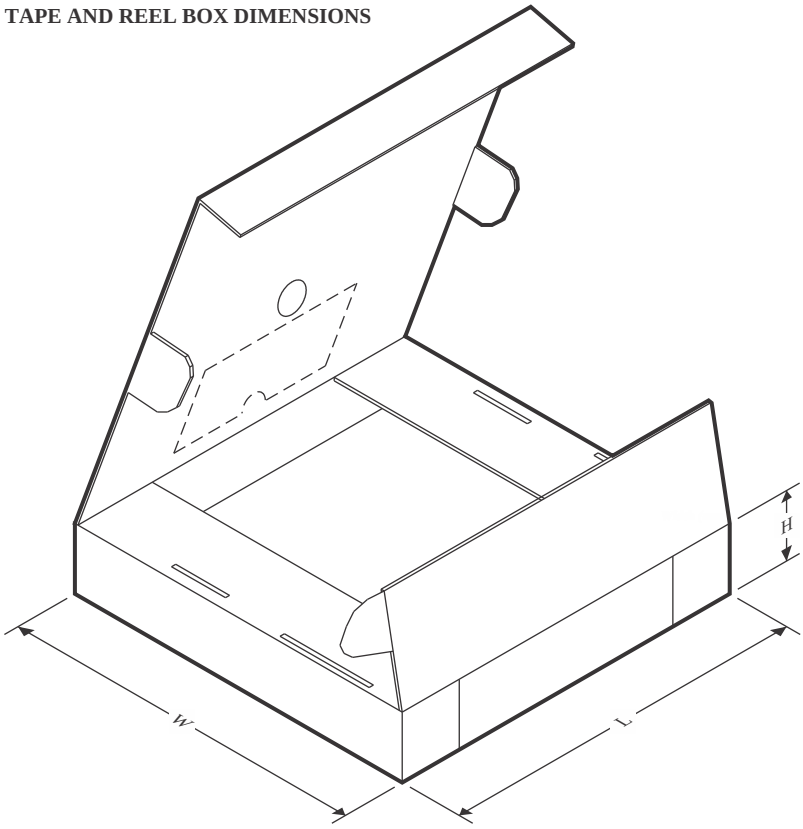

*All dimensions are nominal

Device	Package Type	Package Drawing	Pins	SPQ	Length (mm)	Width (mm)	Height (mm)
BQ25306RTER	WQFN	RTE	16	3000	367.0	367.0	35.0
BQ25306RTER	WQFN	RTE	16	3000	367.0	367.0	35.0
BQ25306RTERG4	WQFN	RTE	16	3000	367.0	367.0	35.0

GENERIC PACKAGE VIEW

RTE 16

WQFN - 0.8 mm max height

3 x 3, 0.5 mm pitch

PLASTIC QUAD FLATPACK - NO LEAD

This image is a representation of the package family, actual package may vary.
Refer to the product data sheet for package details.

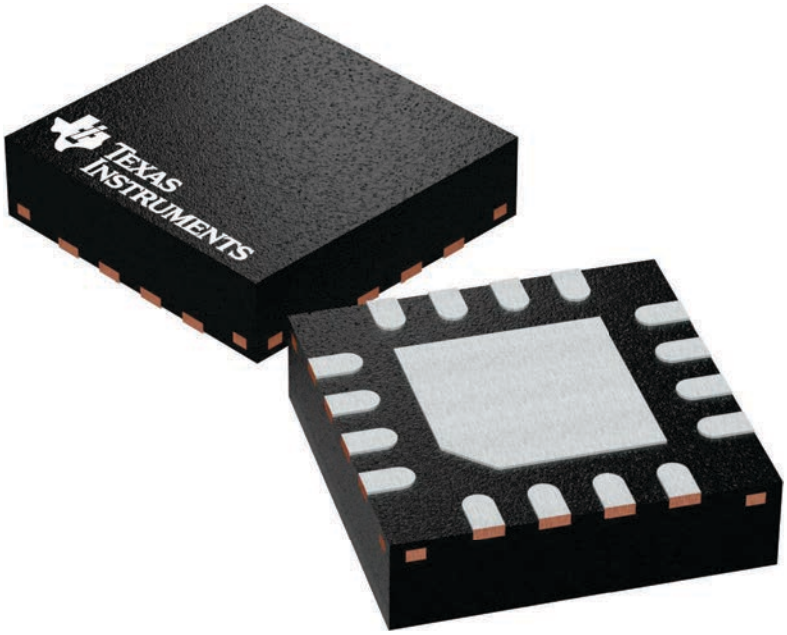

4225944/A

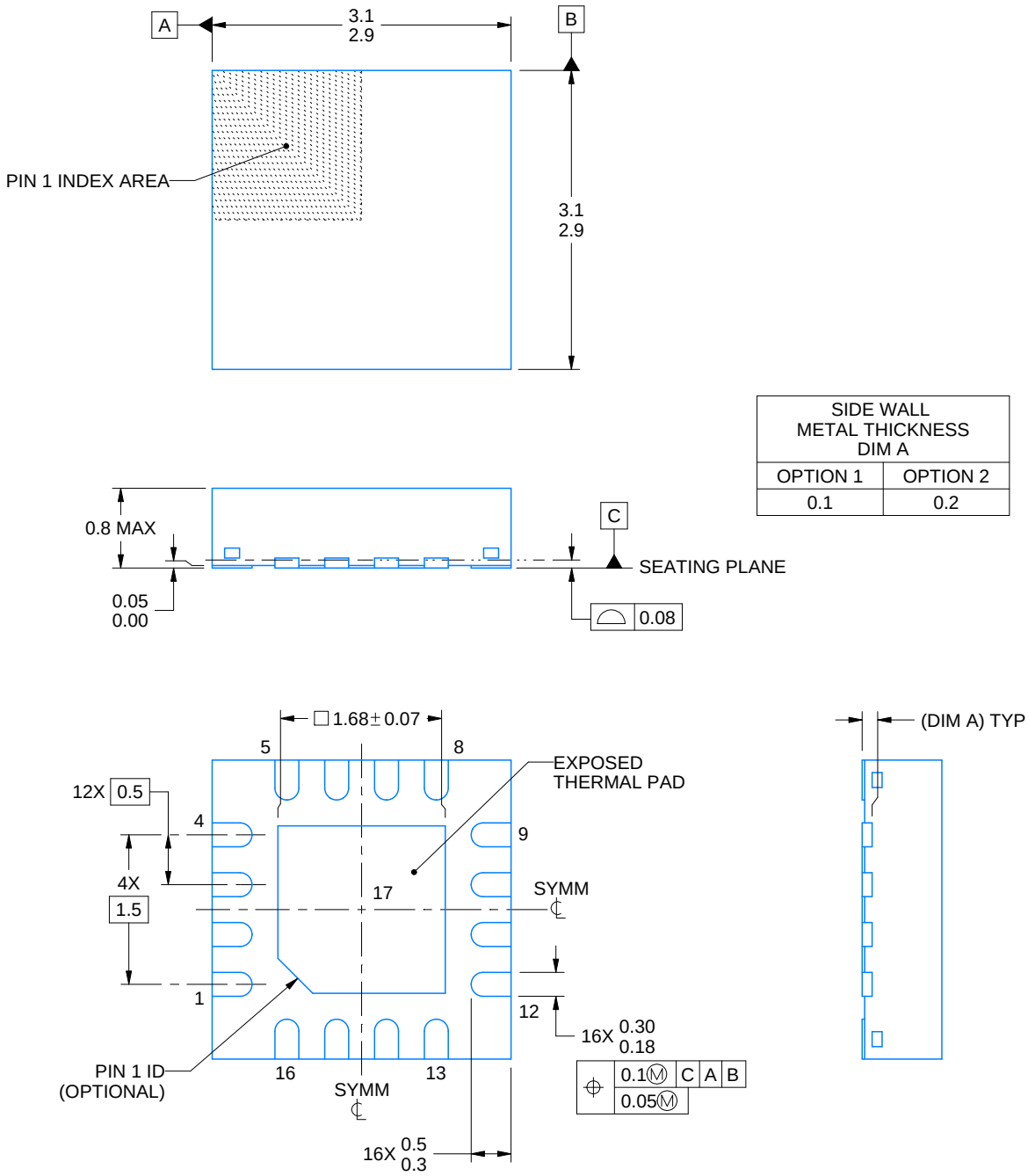

SIDE WALL METAL THICKNESS DIM A	
OPTION 1	OPTION 2
0.1	0.2

NOTES:

1. All linear dimensions are in millimeters. Any dimensions in parenthesis are for reference only. Dimensioning and tolerancing per ASME Y14.5M.
2. This drawing is subject to change without notice.
3. The package thermal pad must be soldered to the printed circuit board for thermal and mechanical performance.

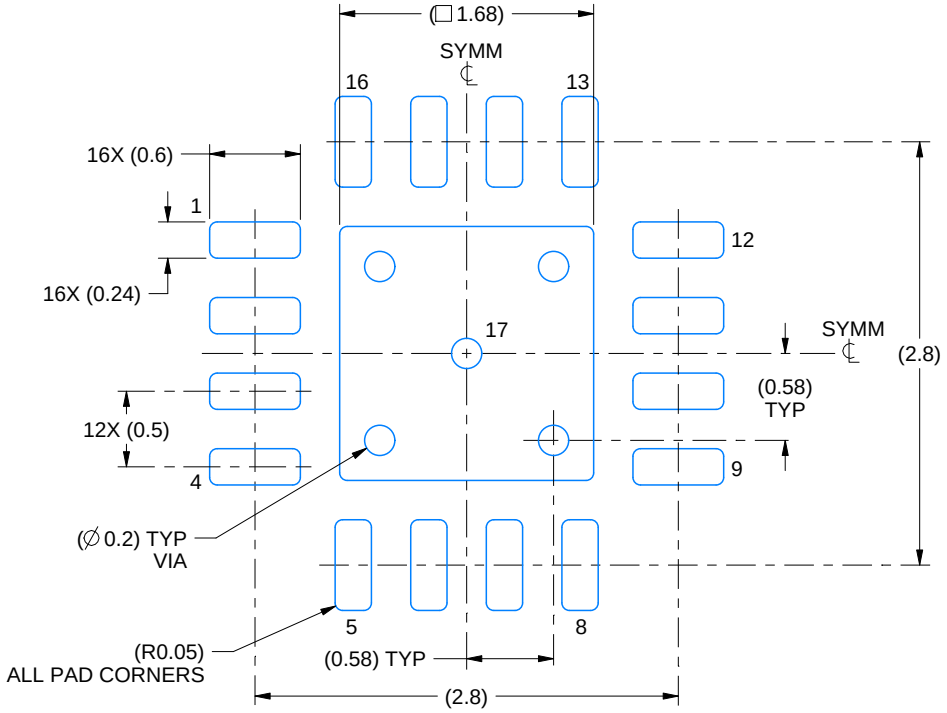

LAND PATTERN EXAMPLE
EXPOSED METAL SHOWN
SCALE:20X

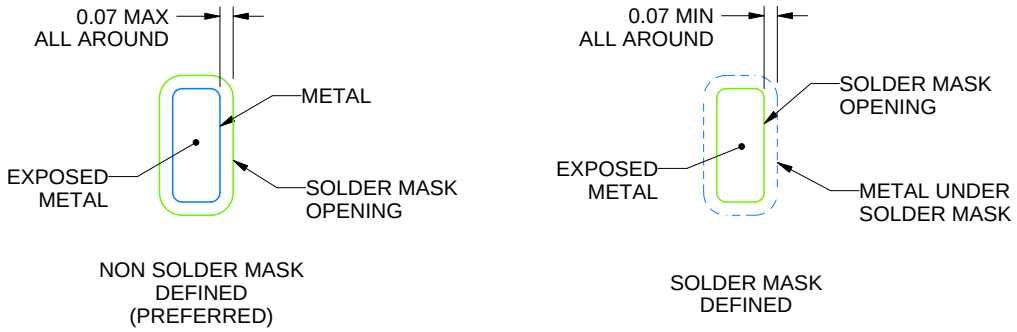

SOLDER MASK DETAILS

4219117/B 04/2022

NOTES: (continued)

4. This package is designed to be soldered to a thermal pad on the board. For more information, see Texas Instruments literature number SLUA271 (www.ti.com/lit/slua271).
5. Vias are optional depending on application, refer to device data sheet. If any vias are implemented, refer to their locations shown on this view. It is recommended that vias under paste be filled, plugged or tented.

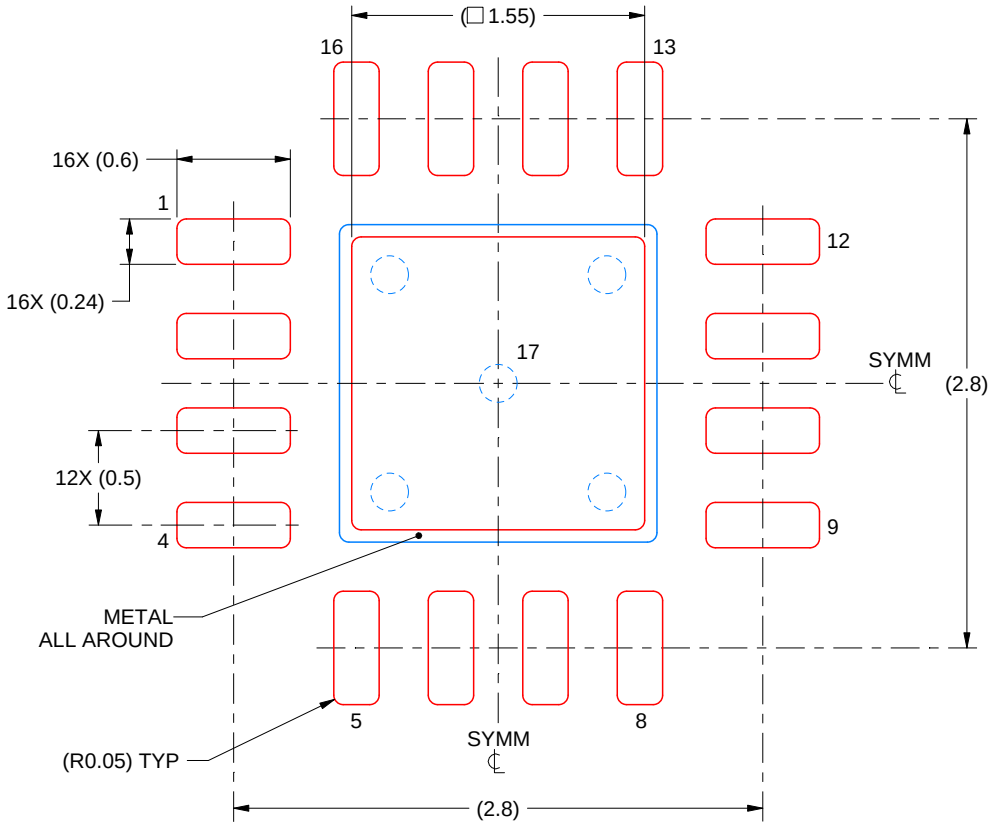

SOLDER PASTE EXAMPLE
BASED ON 0.125 mm THICK STENCIL

EXPOSED PAD 17:
85% PRINTED SOLDER COVERAGE BY AREA UNDER PACKAGE
SCALE:25X

4219117/B 04/2022

NOTES: (continued)

6. Laser cutting apertures with trapezoidal walls and rounded corners may offer better paste release. IPC-7525 may have alternate design recommendations.

重要なお知らせと免責事項

TI は、技術データと信頼性データ (データシートを含みます)、設計リソース (リファレンス デザインを含みます)、アプリケーションや設計に関する各種アドバイス、Web ツール、安全性情報、その他のリソースを、欠陥が存在する可能性のある「現状のまま」提供しており、商品性および特定目的に対する適合性の黙示保証、第三者の知的財産権の非侵害保証を含むいかなる保証も、明示的または黙示的にかかわらず拒否します。

これらのリソースは、TI 製品を使用する設計の経験を積んだ開発者への提供を意図したものです。(1) お客様のアプリケーションに適した TI 製品の選定、(2) お客様のアプリケーションの設計、検証、試験、(3) お客様のアプリケーションに該当する各種規格や、その他のあらゆる安全性、セキュリティ、規制、または他の要件への確実な適合に関する責任を、お客様のみが単独で負うものとします。

上記の各種リソースは、予告なく変更される可能性があります。これらのリソースは、リソースで説明されている TI 製品を使用するアプリケーションの開発の目的でのみ、TI はその使用をお客様に許諾します。これらのリソースに関して、他の目的で複製することや掲載することは禁止されています。TI や第三者の知的財産権のライセンスが付与されている訳ではありません。お客様は、これらのリソースを自身で使用した結果発生するあらゆる申し立て、損害、費用、損失、責任について、TI およびその代理人を完全に補償するものとし、TI は一切の責任を拒否します。

TI の製品は、 TI の販売条件 、 TI の総合的な品質ガイドライン 、 ti.com または TI 製品などに関連して提供される他の適用条件に従い提供されます。TI がこれらのリソースを提供することは、適用される TI の保証または他の保証の放棄の拡大や変更を意味するものではありません。 TI がカスタム、またはカスタマー仕様として明示的に指定していない限り、TI の製品は標準的なカタログに掲載される汎用機器です。

お客様がいかなる追加条項または代替条項を提案する場合も、TI はそれらに異議を唱え、拒否します。

Copyright © 2025, Texas Instruments Incorporated

最終更新日：2025 年 10 月