SNx4ACT74 デュアル ポジティブ エッジ トリガ D タイプ フリップ フロップ

1 特長

- 4.5V～5.5V の V_{CC} で動作
- 5.5V までの入力電圧に対応
- 最大 t_{pd} 10.5 ns (5V 時)
- 入力は TTL 電圧互換

2 概要

'ACT74 デュアル ポジティブ エッジ トリガ デバイスは、D タイプ フリップ フロップです。

製品情報

部品番号	パッケージ (1)	パッケージ サイズ (2)	本体サイズ (3)
SNx4ACT74	PW (TSSOP、14)	5mm × 6.4mm	5mm × 4.40mm
	D (SOIC、14)	8.65mm × 6mm	8.65mm × 3.9mm
	DB (SSOP、14)	6.2mm × 7.8mm	6.2mm × 5.3mm
	N (PDIP、14)	19.3mm × 9.4mm	19.3mm × 6.35mm
	NS (SOP、14)	10.2mm × 7.8mm	10.3mm × 5.3mm

(1) 詳細については、「メカニカル、パッケージ、および注文情報」を参照してください。
(2) パッケージ サイズ (長さ × 幅) は公称値であり、該当する場合はピンも含まれます。
(3) 本体サイズ (長さ×幅) は公称値であり、ピンは含まれません。

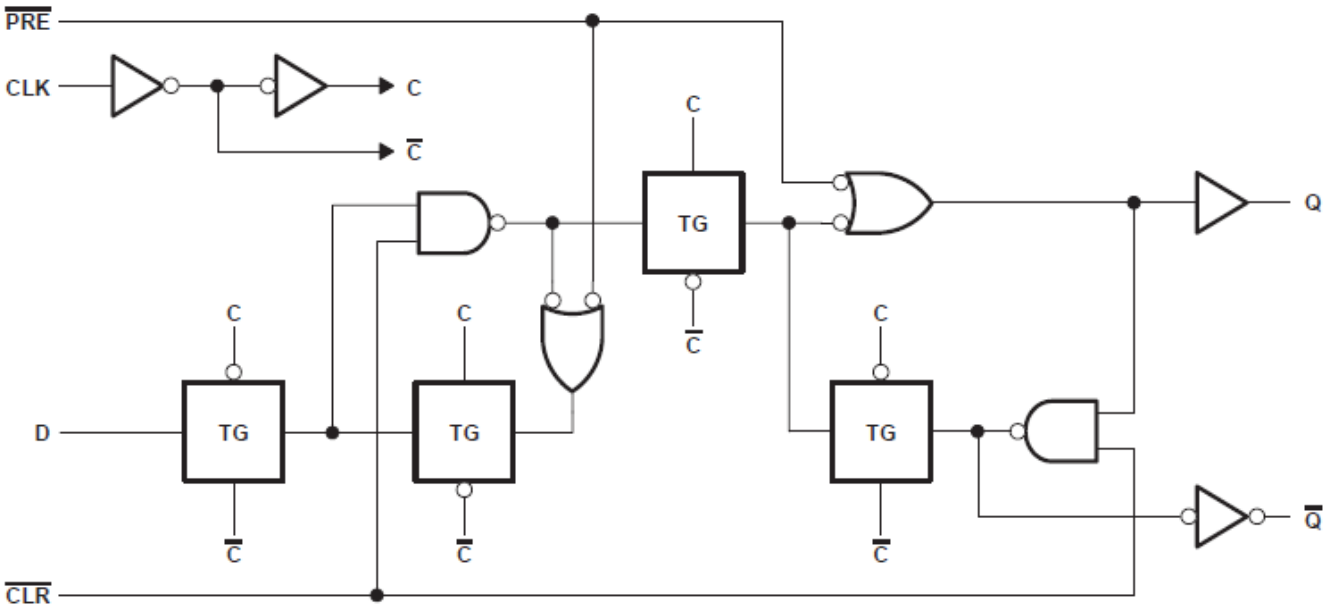

論理図 (正論理)

このリソースの元の言語は英語です。翻訳は概要を便宜的に提供するもので、自動化ツール (機械翻訳) を使用していることがあり、TI では翻訳の正確性および妥当性につきましては一切保証いたしません。実際の設計などの前には、ti.com で必ず最新の英語版をご参照くださいますようお願いいたします。

Table of Contents

1 特長 ... 1
2 概要 ... 1
3 Pin Configuration and Functions ... 3
4 Specifications ... 4
4.1 Absolute Maximum Ratings ... 4
4.2 Recommended Operating Conditions ... 4
4.3 Thermal Information ... 4
4.4 Electrical Characteristics ... 5
4.5 Timing Requirements ... 5
4.6 Switching Characteristics ... 5
4.7 Operating Characteristics ... 6
5 Parameter Measurement Information ... 7
6 Detailed Description ... 8
6.1 Overview ... 8
6.2 Functional Block Diagram ... 8
6.3 Device Functional Modes ... 8
7 Application and Implementation ... 9
7.1 Power Supply Recommendations ... 9
7.2 Layout ... 9
8 Device and Documentation Support ... 10
8.1 Documentation Support (Analog) ... 10
8.2 ドキュメントの更新通知を受け取る方法 ... 10
8.3 サポート・リソース ... 10
8.4 Trademarks ... 10
8.5 静電気放電に関する注意事項 ... 10
8.6 用語集 ... 10
9 Revision History ... 10
10 Mechanical, Packaging, and Orderable Information ... 11

Copyright © 2024 Texas Instruments Incorporated

3 Pin Configuration and Functions

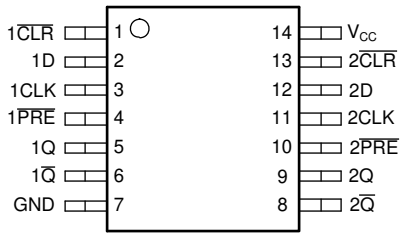

SN54ACT74 J or W Package; SN74ACT74 D, DB, N, NS, PW (Top View)

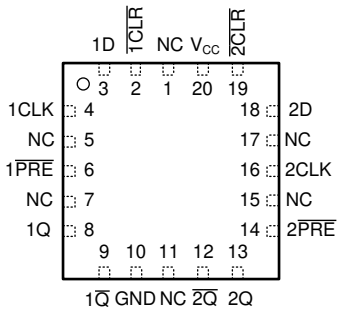

SN54ACT74 FK Package (Top View)

PIN		TYPE[1]	DESCRIPTION
NAME	NO.		
1 $\overline{CLR}$	1	Input	Channel 1, Clear Input, Active Low
1D	2	Input	Channel 1, Data Input
1CLK	3	Input	Channel 1, Positive edge triggered clock input
1 $\overline{PRE}$	4	Input	Channel 1, Preset Input, Active Low
1Q	5	Output	Channel 1, Output
1 $\overline{Q}$	6	Output	Channel 1, Inverted Output
GND	7	—	Ground
2 $\overline{Q}$	8	Output	Channel 2, Inverted Output
2Q	9	Output	Channel 2, Output
2 $\overline{PRE}$	10	Input	Channel 2, Preset Input, Active Low
2CLK	11	Input	Channel 2, Positive edge triggered clock input
2D	12	Input	Channel 2, Data Input
2 $\overline{CLR}$	13	Input	Channel 2, Clear Input, Active Low
V_{CC}	14	—	Positive Supply

(1) Signal Types: I = Input, O = Output, I/O = Input or Output

Copyright © 2024 Texas Instruments Incorporated

4 Specifications

4.1 Absolute Maximum Ratings

over operating free-air temperature range (unless otherwise noted)[1]

			MIN	MAX	UNIT
V_{CC}	Supply voltage range		–0.5	7	V
V_I	Input voltage[2]		–0.5	V_{CC} + 0.5	V
V_O	Voltage range applied to any output in the high-impedance or power-off state[2]		–0.5	V_{CC} + 0.5	V
I_{IK}	Input clamp current	(V_I < 0 or V_I > V_{CC})		±20	mA
I_{OK}	Output clamp current	(V_O < 0 or V_O > V_{CC})		±20	mA
I_O	Continuous output current	(V_O = 0 to V_{CC})		±50	mA
	Continuous current through V_{CC} or GND			±200	mA
T_{stg}	Storage temperature range		–65	150	°C

4.2 Recommended Operating Conditions

over recommended operating free-air temperature range (unless otherwise noted)

		SN54ACT74		SN74ACT74		UNIT
		MIN	MAX	MIN	MAX	
V_{CC}	Supply voltage	4.5	5.5	4.5	5.5	V
V_{IH}	High-level input voltage	2		2		V
V_{IL}	Low-level input voltage		0.8		0.8	V
V_I	Input voltage	0	V_{CC}	0	V_{CC}	V
V_O	Output voltage	0	V_{CC}	0	V_{CC}	V
I_{OH}	High-level output current		–24		–24	mA
I_{OL}	Low-level output current		24		24	mA
$\Delta t/\Delta v$	Input transition rise and fall rate		8		8	ns/V
T_A	Operating free-air temperature	–55	125	–40	85	°C

4.3 Thermal Information

THERMAL METRIC		D (SOIC)	DB (SSOP)	N (PDIP)	NS (SOP)	PW (TSSOP)	UNIT
		14 PINS	14 PINS	14 PINS	14 PINS	14 PINS	
$R_{\theta JA}$	Junction-to-ambient thermal resistance[1]	119.9	96	80	76	145.7	°C/W

(1) For more information about traditional and new thermal metrics, see the *Semiconductor and IC package thermal metrics* application report.

Copyright © 2024 Texas Instruments Incorporated

4.4 Electrical Characteristics

over recommended operating free-air temperature range (unless otherwise noted)

PARAMETER	TEST CONDITIONS	V_{CC}	T_A = 25°C			SN54ACT74		SN74ACT74		UNIT
			MIN	TYP	MAX	MIN	MAX	MIN	MAX	
V_{OH}	I_{OH} = –50 µA	4.5 V	4.4	4.49		4.4		4.4		V
		5.5 V	5.4	5.49		5.4		5.4		
	I_{OH} = –24 mA	4.5 V	3.86			3.7		3.76		
		5.5 V	4.86			4.7		4.76		
	I_{OH} = –50 mA†(1)	5.5 V				3.86				
	I_{OH} = –75 mA†(1)	5.5 V						3.85		
V_{OL}	I_{OL} = 50 µA	4.5 V		0.001	0.1		0.1		0.1	V
		5.5 V		0.001	0.1		0.1		0.1	
	I_{OL} = 24 mA	4.5 V			0.36		0.5		0.44	
		5.5 V			0.36		0.5		0.44	
	I_{OL} = 50 mA†(1)	5.5 V					1.65			
	I_{OL} = 75 mA†(1)	5.5 V							1.65	
I_I	V_I = V_{CC} or GND	5.5 V			±0.1		±1		±1	µA
I_{CC}	V_I = V_{CC} or GND, I_O = 0	5.5 V			2		40		20	µA
ΔI_{CC}‡ (2)	One input at 3.4 V, Other inputs at GND or V_{CC}	5.5 V		0.6			1.6		1.5	mA
C_i	V_I = V_{CC} or GND	5 V		3						pF

(1) Not more than one output should be tested at a time, and the duration of the test should not exceed 2 ms.
(2) This is the increase in supply current for each input that is at one of the specified TTL voltage levels, rather than 0 V or V_{CC}.

4.5 Timing Requirements

over recommended operating free-air temperature range (unless otherwise noted) (see Load Circuit and Voltage Waveforms)

			T_A = 25°C		SN54ACT74		SN74ACT74		UNIT
			MIN	MAX	MIN	MAX	MIN	MAX	
f_{clock}	Clock frequency			145		85		125	MHz
t_w	Pulse duration	$\overline{PRE}$ or $\overline{CLR}$ low	5		7		6		ns
		CLK	5		7		6		
t_{su}	Setup time, data before CLK ↑	Data	3		4		3.5		ns
			0		0.5		0		
t_h	Hold time, data after CLK ↑	$\overline{PRE}$ or $\overline{CLR}$ inactive	1		1		1		ns

4.6 Switching Characteristics

over recommended operating free-air temperature range (unless otherwise noted) (see Load Circuit and Voltage Waveforms)

PARAMETER	FROM (INPUT)	TO (OUTPUT)	SN54ACT74					SN74ACT74					UNIT
			T_A = 25°C			MIN	MAX	T_A = 25°C			MIN	MAX	
			MIN	TYP	MAX			MIN	TYP	MAX			
f_{max}			145	210		85		145	210		125		MHz
t_{PLH}	$\overline{PRE}$ or $\overline{CLR}$	Q or $\overline{Q}$	1	5.5	9.5	1	11.5	3	5.5	9.5	2.5	10.5	ns
t_{PHL}			1	6	10	1	12.5	3	6	10	3	11.5	
t_{PLH}	CLK	Q or $\overline{Q}$	1	7.5	11	1	14	4	7.5	11	4	13	ns
t_{PHL}			1	6	10	1	12	3.5	6	10	3	11.5	

4.7 Operating Characteristics

V_{CC} = 5 V, T_A = 25°C

PARAMETER		TEST CONDITIONS		TYP	UNIT
C_{pd}	Power dissipation capacitance	C_L = 50 pF,	f = 1 MHz	45	pF

Copyright © 2024 Texas Instruments Incorporated

5 Parameter Measurement Information

C_L includes probe and jig capacitance. All input pulses are supplied by generators having the following characteristics: PRR ≤ 1 MHz, ZO = 50 Ω, tr ≤ 2.5 ns, tf ≤ 2.5 ns.The outputs are measured one at a time with one input transition per measurement.

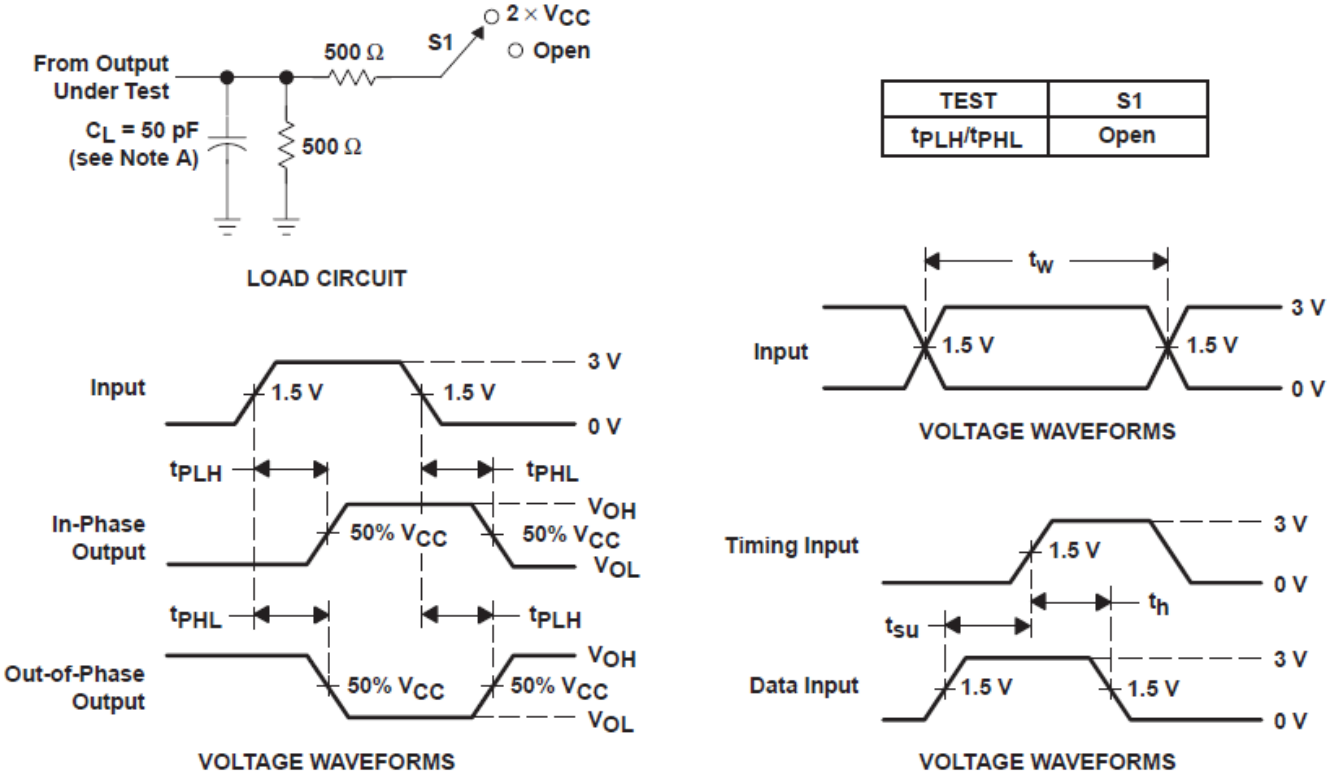

図 5-1. Load Circuit and Voltage Waveforms

,

注

A. C_L includes probe and jig capacitance.

B. All input pulses are supplied by generators having the following characteristics: PRR ≤ 1 MHz, ZO = 50 Ω, tr ≤ 2.5 ns, tf ≤ 2.5 ns.

C. The outputs are measured one at a time with one input transition per measurement.

6 Detailed Description

6.1 Overview

A low level at the preset ($\overline{PRE}$) or clear ($\overline{CLR}$) input sets or resets the outputs, regardless of the levels of the other inputs. When $\overline{PRE}$ and $\overline{CLR}$ are inactive (high), data at the data (D) input meeting the setup-time requirements is transferred to the outputs on the positive-going edge of the clock pulse. Clock triggering occurs at a voltage level and is not directly related to the rise time of the clock pulse. Following the hold-time interval, data at D can be changed without affecting the levels at the outputs.

6.2 Functional Block Diagram

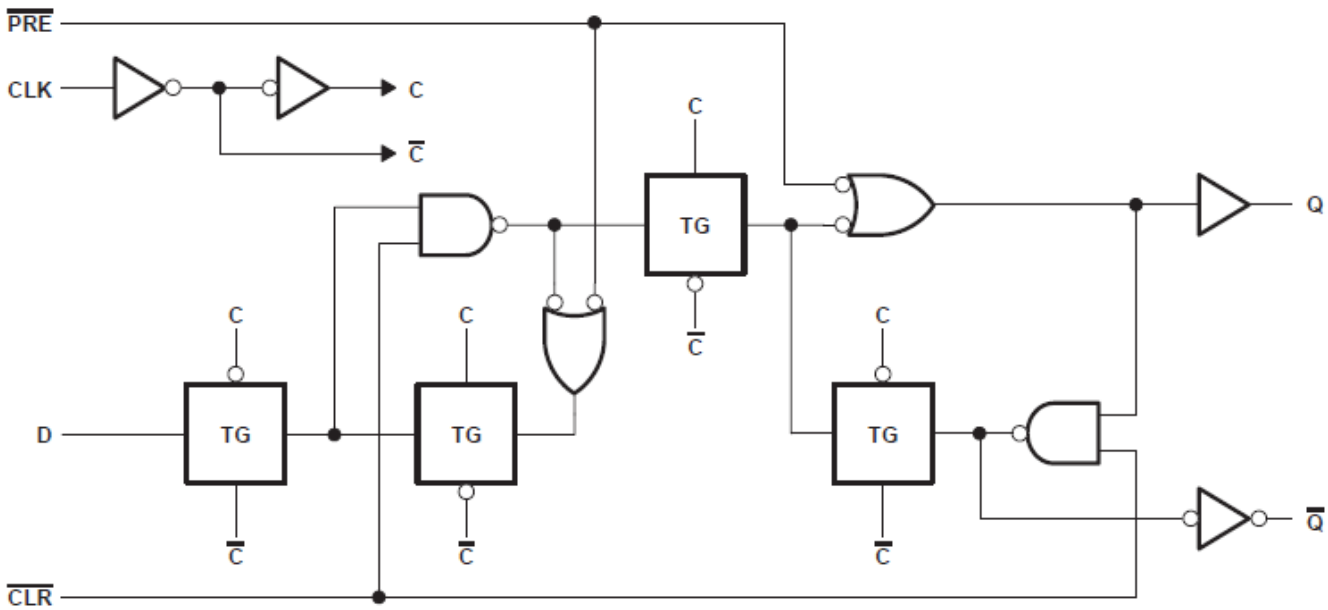

図 6-1. Logic Diagram (Positive Logic)

6.3 Device Functional Modes

表 6-1. Function Table (each flip-flop)

INPUTS				OUTPUTS	
$\overline{PRE}$	$\overline{CLR}$	CLK	D	Q	$\overline{Q}$
L	H	X	X	H	L
H	L	X	X	L	H
L	L	X	X	H[1]	H[1]
H	H	↑	H	H	L
H	H	↑	L	L	H
H	H	L	X	Q_0	$\overline{Q}_0$

1. This configuration is nonstable; that is, it does not persist when either PRE or CLR returns to its inactive (high) level.

Copyright © 2024 Texas Instruments Incorporated

7 Application and Implementation

注

Information in the following applications sections is not part of the TI component specification, and TI does not warrant its accuracy or completeness. TI's customers are responsible for determining suitability of components for their purposes, as well as validating and testing their design implementation to confirm system functionality.

7.1 Power Supply Recommendations

The power supply can be any voltage between the minimum and maximum supply voltage rating located in the *Recommended Operating Conditions*. Each V_{CC} terminal should have a good bypass capacitor to prevent power disturbance. A 0.1-µF capacitor is recommended for this device. It is acceptable to parallel multiple bypass capacitors to reject different frequencies of noise. The 0.1-µF and 1-µF capacitors are commonly used in parallel. The bypass capacitor should be installed as close to the power terminal as possible for best results, as shown in the following layout example.

7.2 Layout

7.2.1 Layout Guidelines

When using multiple bit logic devices inputs should not ever float.

In many cases, functions or parts of functions of digital logic devices are unused, for example, when only two inputs of a triple-input AND gate are used or only three of the four buffer gates are used. Such input pins should not be left unconnected because the undefined voltages at the outside connections result in undefined operational states. Specified below are the rules that must be observed under all circumstances. All unused inputs of digital logic devices must be connected to a high or low bias to prevent them from floating. The logic level that should be applied to any particular unused input depends on the function of the device. Generally they will be tied to GND or V_{CC} whichever make more sense or is more convenient. Floating outputs is generally acceptable, unless the part is a transceiver. If the transceiver has an output enable pin it will disable the outputs section of the part when asserted. This will not disable the input section of the I.O's so they also cannot float when disabled.

7.2.2 Layout Example

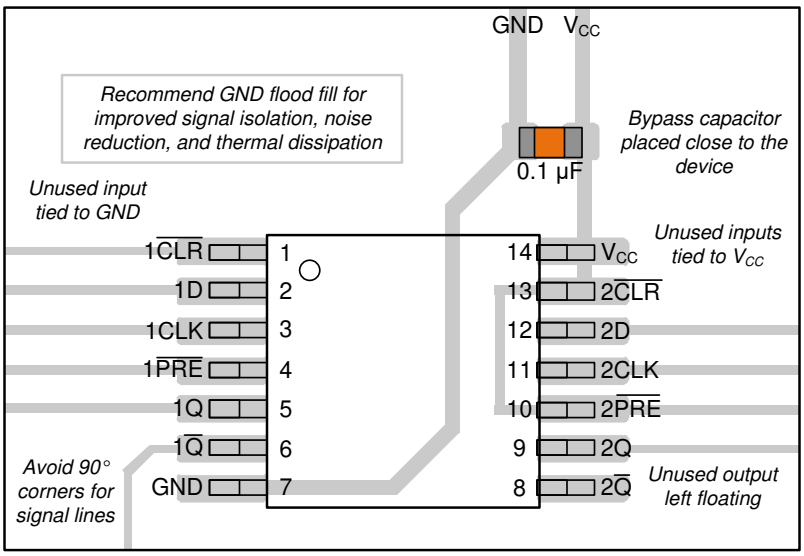

図 7-1. Example Layout for the in the SNx4ACT74 Package

8 Device and Documentation Support

TI offers an extensive line of development tools. Tools and software to evaluate the performance of the device, generate code, and develop solutions are listed below.

8.1 Documentation Support (Analog)

8.1.1 Related Documentation

The table below lists quick access links. Categories include technical documents, support and community resources, tools and software, and quick access to sample or buy.

表 8-1. Related Links

PARTS	PRODUCT FOLDER	SAMPLE & BUY	TECHNICAL DOCUMENTS	TOOLS & SOFTWARE	SUPPORT & COMMUNITY
SN54ACT74	Click here	Click here	Click here	Click here	Click here
SN74ACT74	Click here	Click here	Click here	Click here	Click here

8.2 ドキュメントの更新通知を受け取る方法

ドキュメントの更新についての通知を受け取るには、www.tij.co.jp のデバイス製品フォルダを開いてください。[通知] をクリックして登録すると、変更されたすべての製品情報に関するダイジェストを毎週受け取ることができます。変更の詳細については、改訂されたドキュメントに含まれている改訂履歴をご覧ください。

8.3 サポート・リソース

テキサス・インスツルメンツ E2E™ サポート・フォーラムは、エンジニアが検証済みの回答と設計に関するヒントをエキスパートから迅速かつ直接得ることができる場所です。既存の回答を検索したり、独自の質問をしたりすることで、設計で必要な支援を迅速に得ることができます。

リンクされているコンテンツは、各寄稿者により「現状のまま」提供されるものです。これらはテキサス・インスツルメンツの仕様を構成するものではなく、必ずしもテキサス・インスツルメンツの見解を反映したものではありません。テキサス・インスツルメンツの使用条件を参照してください。

8.4 Trademarks

テキサス・インスツルメンツ E2E™ is a trademark of Texas Instruments.
すべての商標は、それぞれの所有者に帰属します。

8.5 静電気放電に関する注意事項

この IC は、ESD によって破損する可能性があります。テキサス・インスツルメンツは、IC を取り扱う際には常に適切な注意を払うことを推奨します。正しい取り扱いおよび設置手順に従わない場合、デバイスを破損するおそれがあります。

ESD による破損は、わずかな性能低下からデバイスの完全な故障まで多岐にわたります。精密な IC の場合、パラメータがわずかに変化するだけで公表されている仕様から外れる可能性があるため、破損が発生しやすくなっています。

8.6 用語集

テキサス・インスツルメンツ用語集　　この用語集には、用語や略語の一覧および定義が記載されています。

9 Revision History

資料番号末尾の英字は改訂を表しています。その改訂履歴は英語版に準じています。

Changes from Revision H (October 2003) to Revision I (July 2024) **Page**

- 製品情報の表、ピンの機能の表、熱に関する情報の表、「デバイスの機能モード」、「アプリケーションと実装」セクション、「デバイスおよびドキュメントのサポート」セクション、および「メカニカル、パッケージ、および注文情報」セクションを追加 1
- ドキュメント全体にわたって表、図、相互参照の採番方法を更新 1

Copyright © 2024 Texas Instruments Incorporated

• Updated RθJA values: D = 86 to 119.9, PW = 113 to 145.7, all values in °C/W..... 4

10 Mechanical, Packaging, and Orderable Information

The following pages include mechanical, packaging, and orderable information. This information is the most current data available for the designated devices. This data is subject to change without notice and revision of this document. For browser-based versions of this data sheet, refer to the left-hand navigation.

重要なお知らせと免責事項

テキサス・インスツルメンツは、技術データと信頼性データ (データシートを含みます)、設計リソース (リファレンス デザインを含みます)、アプリケーションや設計に関する各種アドバイス、Web ツール、安全性情報、その他のリソースを、欠陥が存在する可能性のある「現状のまま」提供しており、商品性および特定目的に対する適合性の黙示保証、第三者の知的財産権の非侵害保証を含むいかなる保証も、明示的または黙示的にかかわらず拒否します。

これらのリソースは、テキサス・インスツルメンツ製品を使用する設計の経験を積んだ開発者への提供を意図したものです。(1) お客様のアプリケーションに適した テキサス・インスツルメンツ製品の選定、(2) お客様のアプリケーションの設計、検証、試験、(3) お客様のアプリケーションに該当する各種規格や、その他のあらゆる安全性、セキュリティ、規制、または他の要件への確実な適合に関する責任を、お客様のみが単独で負うものとします。

上記の各種リソースは、予告なく変更される可能性があります。これらのリソースは、リソースで説明されている テキサス・インスツルメンツ製品を使用するアプリケーションの開発の目的でのみ、テキサス・インスツルメンツはその使用をお客様に許諾します。これらのリソースに関して、他の目的で複製することや掲載することは禁止されています。テキサス・インスツルメンツや第三者の知的財産権のライセンスが付与されている訳ではありません。お客様は、これらのリソースを自身で使用した結果発生するあらゆる申し立て、損害、費用、損失、責任について、テキサス・インスツルメンツおよびその代理人を完全に補償するものとし、テキサス・インスツルメンツは一切の責任を拒否します。

テキサス・インスツルメンツの製品は、テキサス・インスツルメンツの販売条件、または ti.com やかかる テキサス・インスツルメンツ製品の関連資料などのいずれかを通じて提供する適用可能な条項の下で提供されています。テキサス・インスツルメンツがこれらのリソースを提供することは、適用される テキサス・インスツルメンツの保証または他の保証の放棄の拡大や変更を意味するものではありません。

お客様がいかなる追加条項または代替条項を提案した場合でも、テキサス・インスツルメンツはそれらに異議を唱え、拒否します。

郵送先住所：Texas Instruments, Post Office Box 655303, Dallas, Texas 75265
Copyright © 2024, Texas Instruments Incorporated

PACKAGING INFORMATION

Orderable Device	Status (1)	Package Type	Package Drawing	Pins	Package Qty	Eco Plan (2)	Lead finish/ Ball material (6)	MSL Peak Temp (3)	Op Temp (°C)	Device Marking (4/5)	Samples
5962-8752501M2A	ACTIVE	LCCC	FK	20	55	Non-RoHS & Green	SNPB	N / A for Pkg Type	-55 to 125	5962-8752501M2A SNJ54ACT 74FK	Samples
5962-8752501MCA	ACTIVE	CDIP	J	14	25	Non-RoHS & Green	SNPB	N / A for Pkg Type	-55 to 125	5962-8752501MCA SNJ54ACT74J	Samples
5962-8752501MDA	ACTIVE	CFP	W	14	25	Non-RoHS & Green	SNPB	N / A for Pkg Type	-55 to 125	5962-8752501MDA SNJ54ACT74W	Samples
SN74ACT74D	OBSOLETE	SOIC	D	14		TBD	Call TI	Call TI	-40 to 85	ACT74	
SN74ACT74DBR	ACTIVE	SSOP	DB	14	2000	RoHS & Green	NIPDAU	Level-1-260C-UNLIM	-40 to 85	AD74	Samples
SN74ACT74DR	ACTIVE	SOIC	D	14	2500	RoHS & Green	NIPDAU	Level-1-260C-UNLIM	-40 to 85	ACT74	Samples
SN74ACT74N	ACTIVE	PDIP	N	14	25	RoHS & Green	NIPDAU	N / A for Pkg Type	-40 to 85	SN74ACT74N	Samples
SN74ACT74NE4	ACTIVE	PDIP	N	14	25	RoHS & Green	NIPDAU	N / A for Pkg Type	-40 to 85	SN74ACT74N	Samples
SN74ACT74NSR	ACTIVE	SO	NS	14	2000	RoHS & Green	NIPDAU	Level-1-260C-UNLIM	-40 to 85	ACT74	Samples
SN74ACT74PW	OBSOLETE	TSSOP	PW	14		TBD	Call TI	Call TI	-40 to 85	AD74	
SN74ACT74PWR	ACTIVE	TSSOP	PW	14	2000	RoHS & Green	NIPDAU	Level-1-260C-UNLIM	-40 to 85	AD74	Samples
SNJ54ACT74FK	ACTIVE	LCCC	FK	20	55	Non-RoHS & Green	SNPB	N / A for Pkg Type	-55 to 125	5962-8752501M2A SNJ54ACT 74FK	Samples
SNJ54ACT74J	ACTIVE	CDIP	J	14	25	Non-RoHS & Green	SNPB	N / A for Pkg Type	-55 to 125	5962-8752501MCA SNJ54ACT74J	Samples
SNJ54ACT74W	ACTIVE	CFP	W	14	25	Non-RoHS & Green	SNPB	N / A for Pkg Type	-55 to 125	5962-8752501MDA SNJ54ACT74W	Samples

(1) The marketing status values are defined as follows:
ACTIVE: Product device recommended for new designs.

LIFEBUY: TI has announced that the device will be discontinued, and a lifetime-buy period is in effect.
NRND: Not recommended for new designs. Device is in production to support existing customers, but TI does not recommend using this part in a new design.
PREVIEW: Device has been announced but is not in production. Samples may or may not be available.
OBSOLETE: TI has discontinued the production of the device.

(2) **RoHS:** TI defines "RoHS" to mean semiconductor products that are compliant with the current EU RoHS requirements for all 10 RoHS substances, including the requirement that RoHS substance do not exceed 0.1% by weight in homogeneous materials. Where designed to be soldered at high temperatures, "RoHS" products are suitable for use in specified lead-free processes. TI may reference these types of products as "Pb-Free".
RoHS Exempt: TI defines "RoHS Exempt" to mean products that contain lead but are compliant with EU RoHS pursuant to a specific EU RoHS exemption.
Green: TI defines "Green" to mean the content of Chlorine (Cl) and Bromine (Br) based flame retardants meet JS709B low halogen requirements of <=1000ppm threshold. Antimony trioxide based flame retardants must also meet the <=1000ppm threshold requirement.

(3) MSL, Peak Temp. - The Moisture Sensitivity Level rating according to the JEDEC industry standard classifications, and peak solder temperature.

(4) There may be additional marking, which relates to the logo, the lot trace code information, or the environmental category on the device.

(5) Multiple Device Markings will be inside parentheses. Only one Device Marking contained in parentheses and separated by a "~" will appear on a device. If a line is indented then it is a continuation of the previous line and the two combined represent the entire Device Marking for that device.

(6) Lead finish/Ball material - Orderable Devices may have multiple material finish options. Finish options are separated by a vertical ruled line. Lead finish/Ball material values may wrap to two lines if the finish value exceeds the maximum column width.

Important Information and Disclaimer: The information provided on this page represents TI's knowledge and belief as of the date that it is provided. TI bases its knowledge and belief on information provided by third parties, and makes no representation or warranty as to the accuracy of such information. Efforts are underway to better integrate information from third parties. TI has taken and continues to take reasonable steps to provide representative and accurate information but may not have conducted destructive testing or chemical analysis on incoming materials and chemicals. TI and TI suppliers consider certain information to be proprietary, and thus CAS numbers and other limited information may not be available for release.

In no event shall TI's liability arising out of such information exceed the total purchase price of the TI part(s) at issue in this document sold by TI to Customer on an annual basis.

OTHER QUALIFIED VERSIONS OF SN54ACT74, SN74ACT74 :

- Catalog : SN74ACT74
- Enhanced Product : SN74ACT74-EP, SN74ACT74-EP
- Military : SN54ACT74

NOTE: Qualified Version Definitions:

- Catalog - TI's standard catalog product
- Enhanced Product - Supports Defense, Aerospace and Medical Applications
- Military - QML certified for Military and Defense Applications

TAPE AND REEL INFORMATION

REEL DIMENSIONS

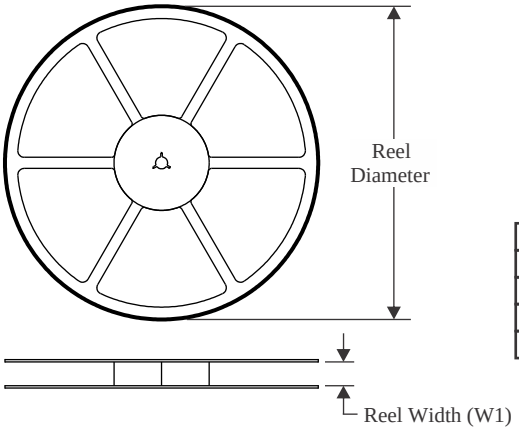

TAPE DIMENSIONS

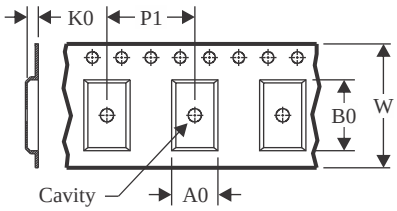

A0	Dimension designed to accommodate the component width
B0	Dimension designed to accommodate the component length
K0	Dimension designed to accommodate the component thickness
W	Overall width of the carrier tape
P1	Pitch between successive cavity centers

QUADRANT ASSIGNMENTS FOR PIN 1 ORIENTATION IN TAPE

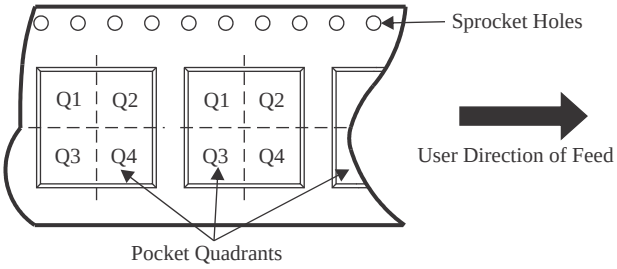

*All dimensions are nominal

Device	Package Type	Package Drawing	Pins	SPQ	Reel Diameter (mm)	Reel Width W1 (mm)	A0 (mm)	B0 (mm)	K0 (mm)	P1 (mm)	W (mm)	Pin1 Quadrant
SN74ACT74DBR	SSOP	DB	14	2000	330.0	16.4	8.35	6.6	2.4	12.0	16.0	Q1
SN74ACT74DR	SOIC	D	14	2500	330.0	16.4	6.5	9.0	2.1	8.0	16.0	Q1
SN74ACT74DR	SOIC	D	14	2500	330.0	16.4	6.5	9.0	2.1	8.0	16.0	Q1
SN74ACT74NSR	SO	NS	14	2000	330.0	16.4	8.2	10.5	2.5	12.0	16.0	Q1
SN74ACT74PWR	TSSOP	PW	14	2000	330.0	12.4	6.9	5.6	1.6	8.0	12.0	Q1

TAPE AND REEL BOX DIMENSIONS

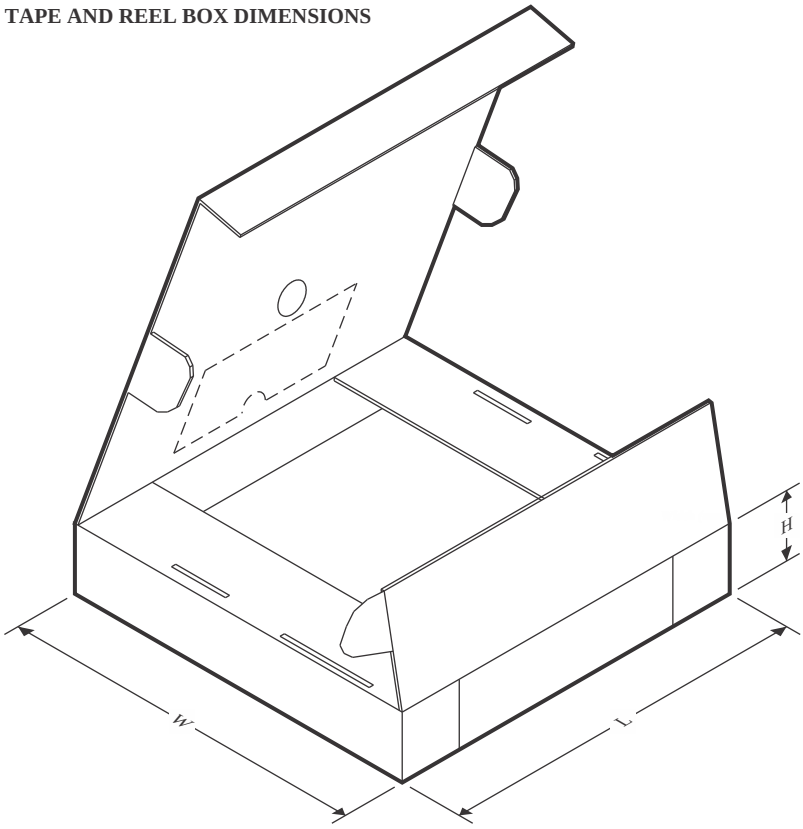

*All dimensions are nominal

Device	Package Type	Package Drawing	Pins	SPQ	Length (mm)	Width (mm)	Height (mm)
SN74ACT74DBR	SSOP	DB	14	2000	356.0	356.0	35.0
SN74ACT74DR	SOIC	D	14	2500	356.0	356.0	35.0
SN74ACT74DR	SOIC	D	14	2500	353.0	353.0	32.0
SN74ACT74NSR	SO	NS	14	2000	356.0	356.0	35.0
SN74ACT74PWR	TSSOP	PW	14	2000	356.0	356.0	35.0

TUBE

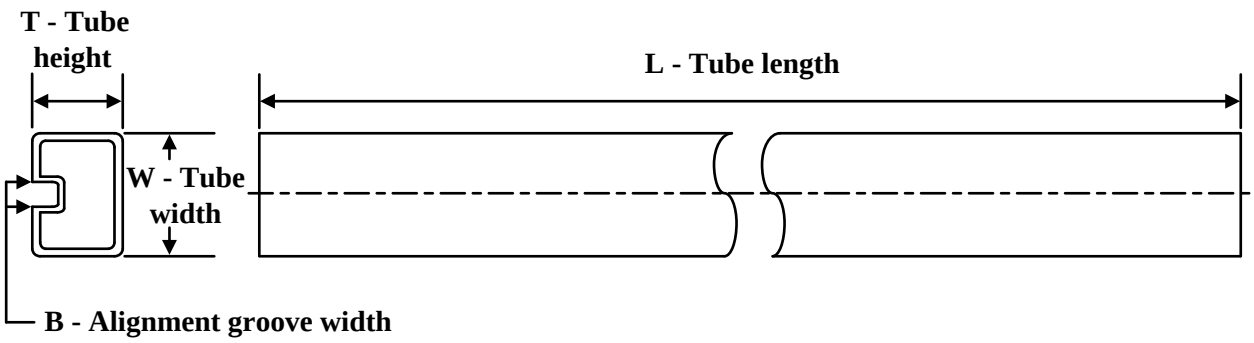

*All dimensions are nominal

Device	Package Name	Package Type	Pins	SPQ	L (mm)	W (mm)	T (µm)	B (mm)
5962-8752501M2A	FK	LCCC	20	55	506.98	12.06	2030	NA
5962-8752501MDA	W	CFP	14	25	506.98	26.16	6220	NA
SN74ACT74N	N	PDIP	14	25	506	13.97	11230	4.32
SN74ACT74N	N	PDIP	14	25	506	13.97	11230	4.32
SN74ACT74NE4	N	PDIP	14	25	506	13.97	11230	4.32
SN74ACT74NE4	N	PDIP	14	25	506	13.97	11230	4.32
SNJ54ACT74FK	FK	LCCC	20	55	506.98	12.06	2030	NA
SNJ54ACT74W	W	CFP	14	25	506.98	26.16	6220	NA

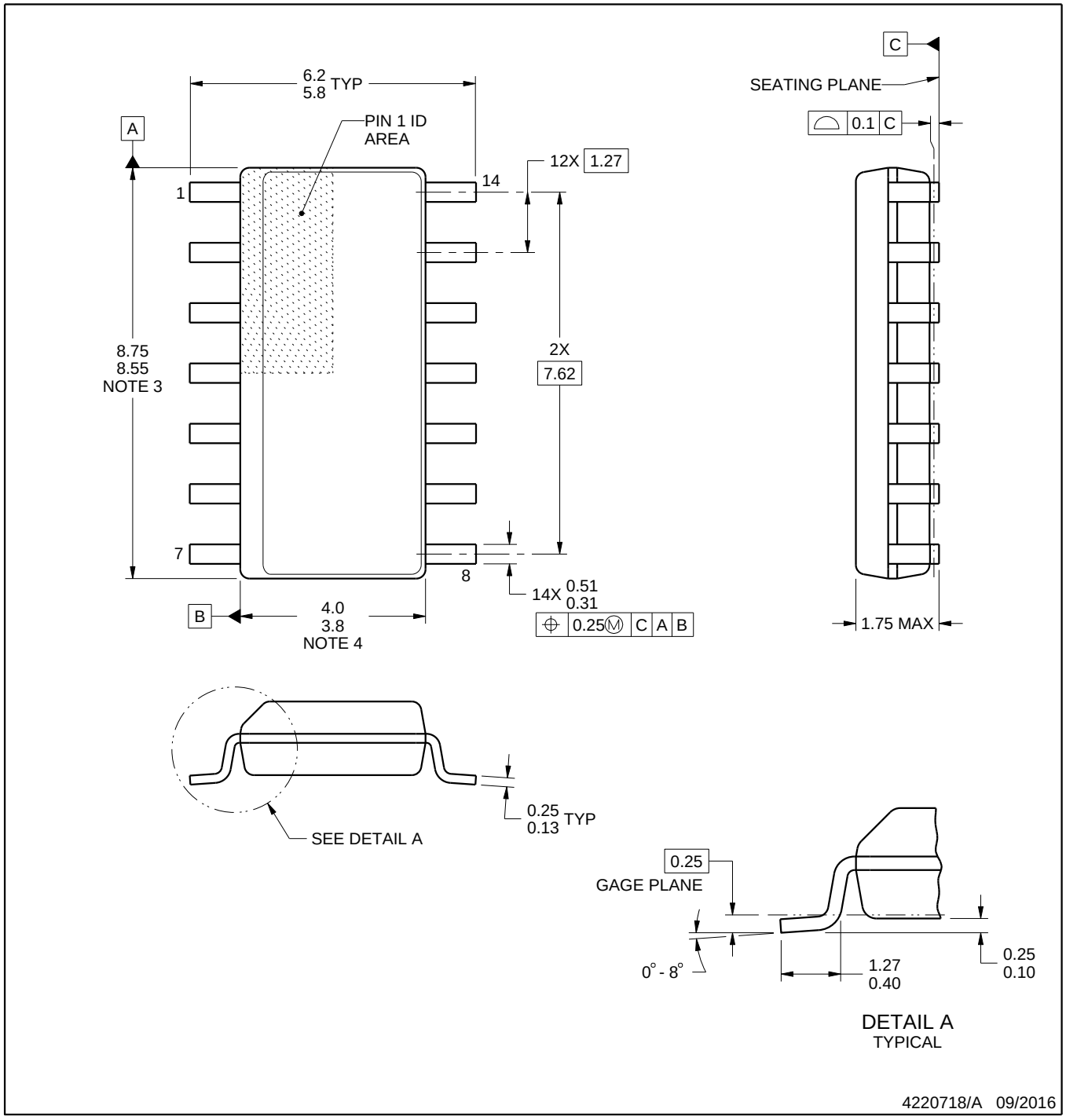

NOTES:

1. All linear dimensions are in millimeters. Dimensions in parenthesis are for reference only. Dimensioning and tolerancing per ASME Y14.5M.
2. This drawing is subject to change without notice.
3. This dimension does not include mold flash, protrusions, or gate burrs. Mold flash, protrusions, or gate burrs shall not exceed 0.15 mm, per side.
4. This dimension does not include interlead flash. Interlead flash shall not exceed 0.43 mm, per side.
5. Reference JEDEC registration MS-012, variation AB.

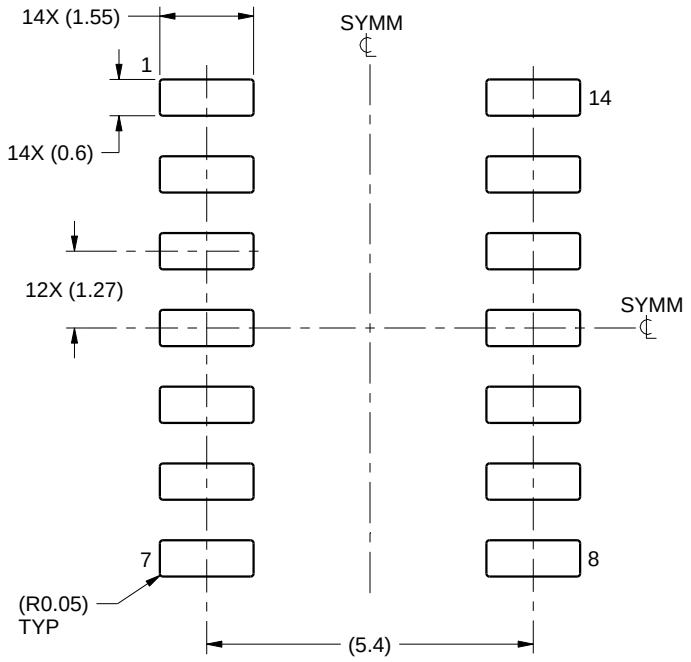

LAND PATTERN EXAMPLE
SCALE:8X

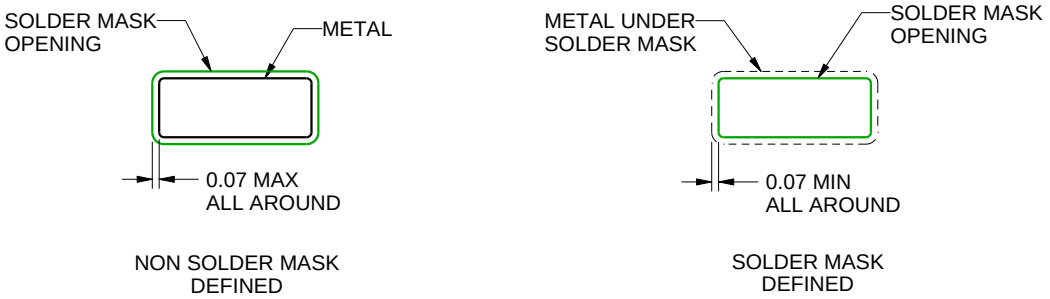

SOLDER MASK DETAILS

4220718/A 09/2016

NOTES: (continued)

6. Publication IPC-7351 may have alternate designs.
7. Solder mask tolerances between and around signal pads can vary based on board fabrication site.

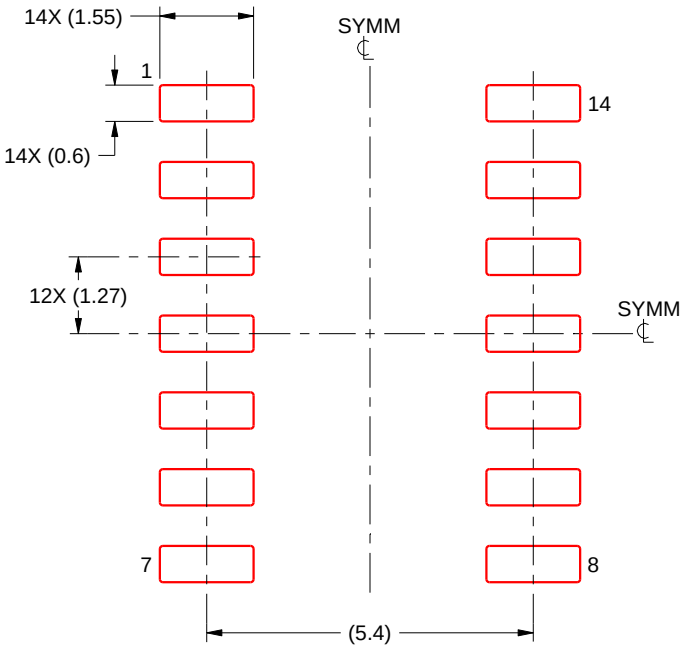

SOLDER PASTE EXAMPLE
BASED ON 0.125 mm THICK STENCIL
SCALE:8X

4220718/A 09/2016

NOTES: (continued)

8. Laser cutting apertures with trapezoidal walls and rounded corners may offer better paste release. IPC-7525 may have alternate design recommendations.
9. Board assembly site may have different recommendations for stencil design.

MECHANICAL DATA

NS (R-PDSO-G)** **PLASTIC SMALL-OUTLINE PACKAGE**

14-PINS SHOWN

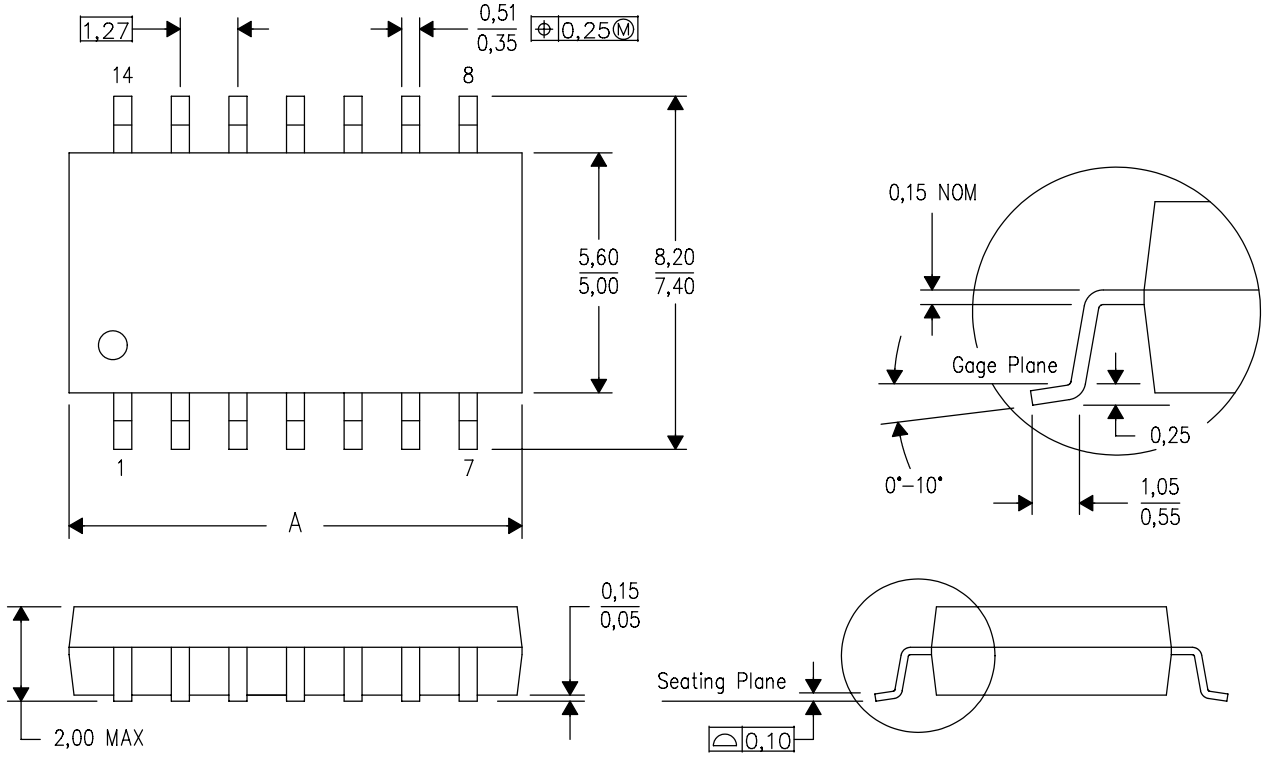

DIM \ PINS **	14	16	20	24
A MAX	10,50	10,50	12,90	15,30
A MIN	9,90	9,90	12,30	14,70

4040062/C 03/03

NOTES:
A. All linear dimensions are in millimeters.
B. This drawing is subject to change without notice.
C. Body dimensions do not include mold flash or protrusion, not to exceed 0,15.

W (R–GDFP–F14) CERAMIC DUAL FLATPACK

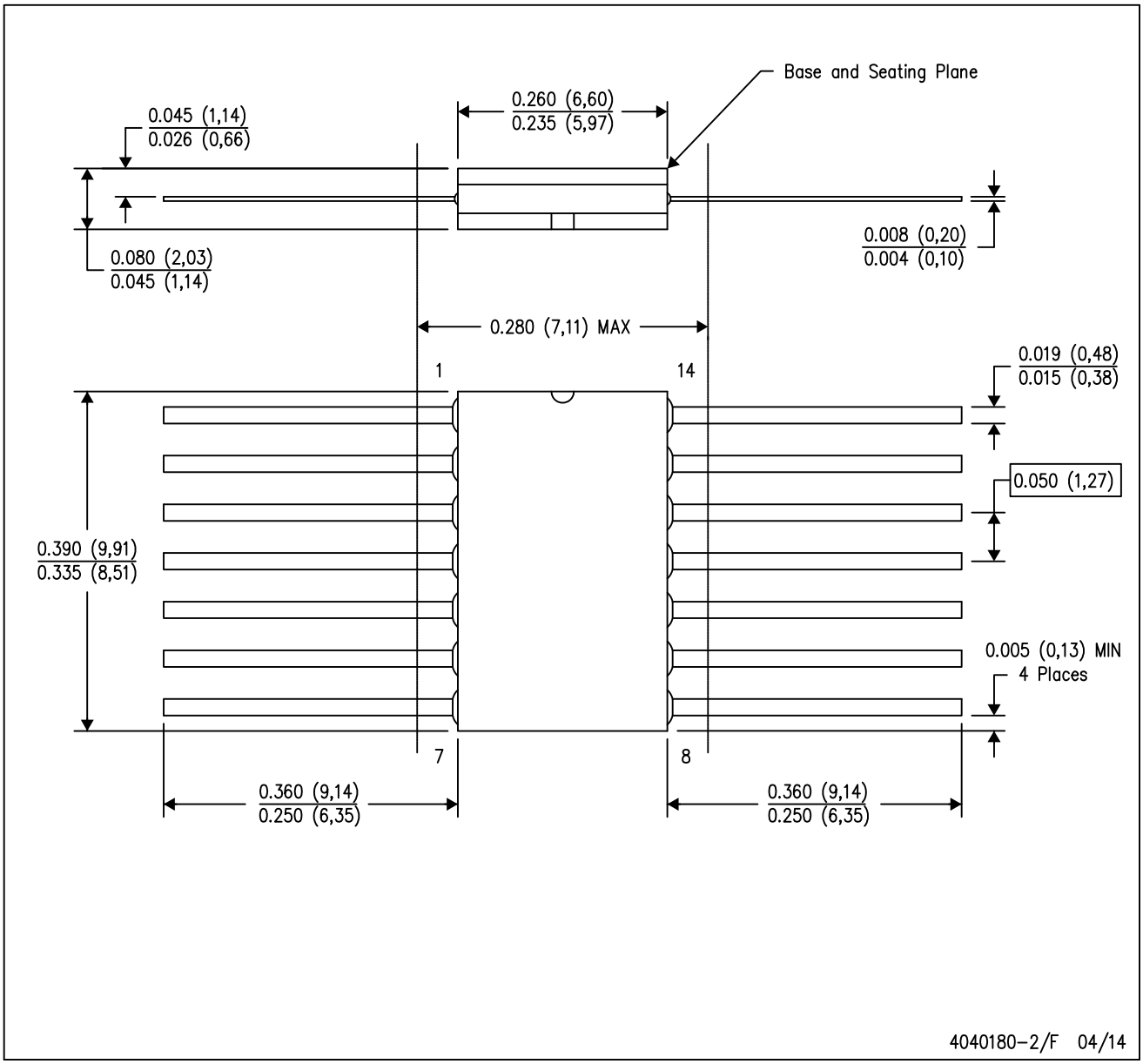

NOTES:
A. All linear dimensions are in inches (millimeters).
B. This drawing is subject to change without notice.
C. This package can be hermetically sealed with a ceramic lid using glass frit.
D. Index point is provided on cap for terminal identification only.
E. Falls within MIL STD 1835 GDFP1–F14

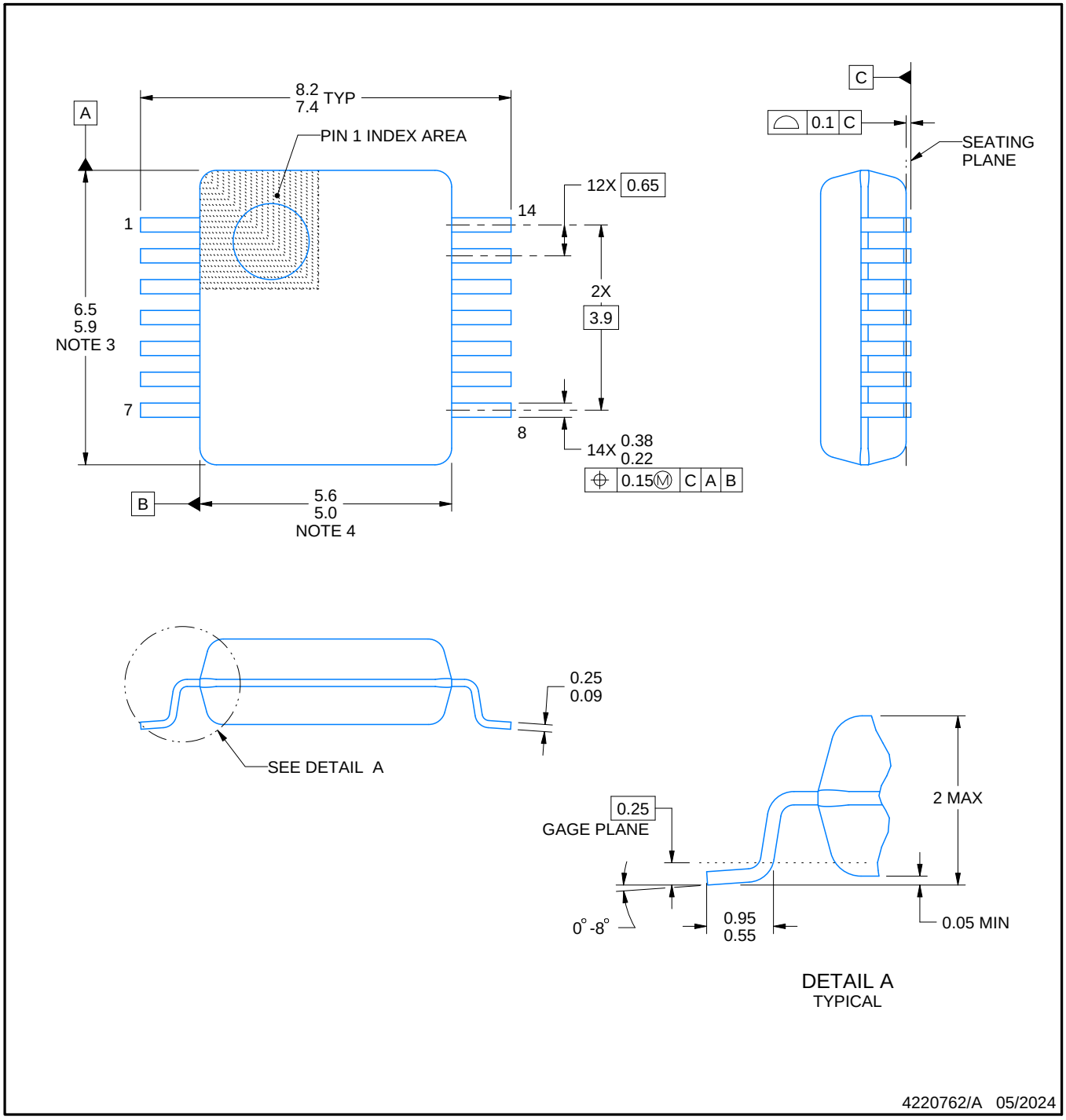

NOTES:

1. All linear dimensions are in millimeters. Any dimensions in parenthesis are for reference only. Dimensioning and tolerancing per ASME Y14.5M.
2. This drawing is subject to change without notice.
3. This dimension does not include mold flash, protrusions, or gate burrs. Mold flash, protrusions, or gate burrs shall not exceed 0.15 mm per side.
4. Reference JEDEC registration MO-150.

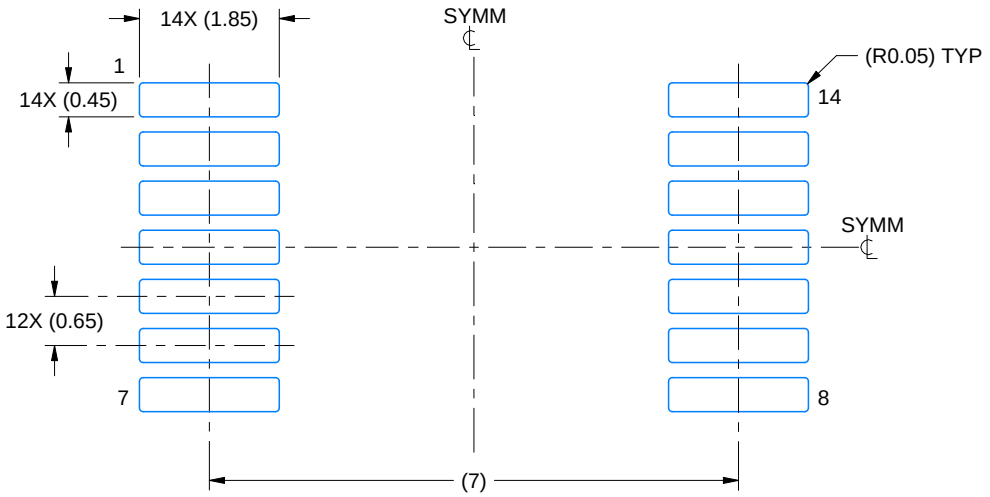

LAND PATTERN EXAMPLE
EXPOSED METAL SHOWN
SCALE: 10X

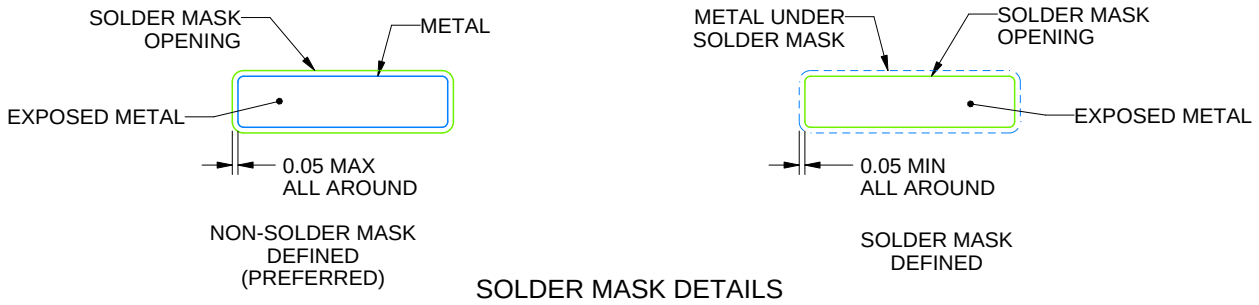

SOLDER MASK DETAILS

4220762/A 05/2024

NOTES: (continued)

5. Publication IPC-7351 may have alternate designs.
6. Solder mask tolerances between and around signal pads can vary based on board fabrication site.

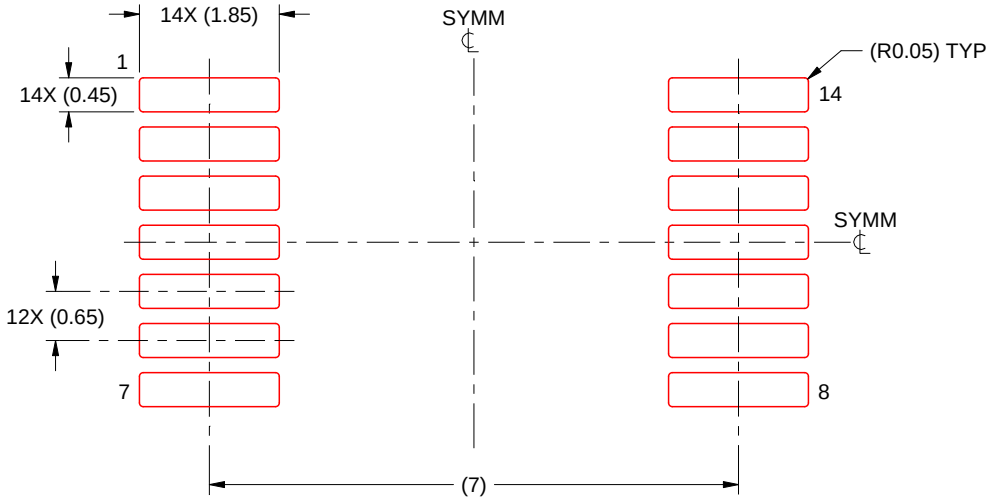

SOLDER PASTE EXAMPLE
BASED ON 0.125 mm THICK STENCIL
SCALE: 10X

4220762/A 05/2024

NOTES: (continued)

7. Laser cutting apertures with trapezoidal walls and rounded corners may offer better paste release. IPC-7525 may have alternate design recommendations.
8. Board assembly site may have different recommendations for stencil design.

GENERIC PACKAGE VIEW

FK 20

LCCC - 2.03 mm max height

8.89 x 8.89, 1.27 mm pitch

LEADLESS CERAMIC CHIP CARRIER

This image is a representation of the package family, actual package may vary.
Refer to the product data sheet for package details.

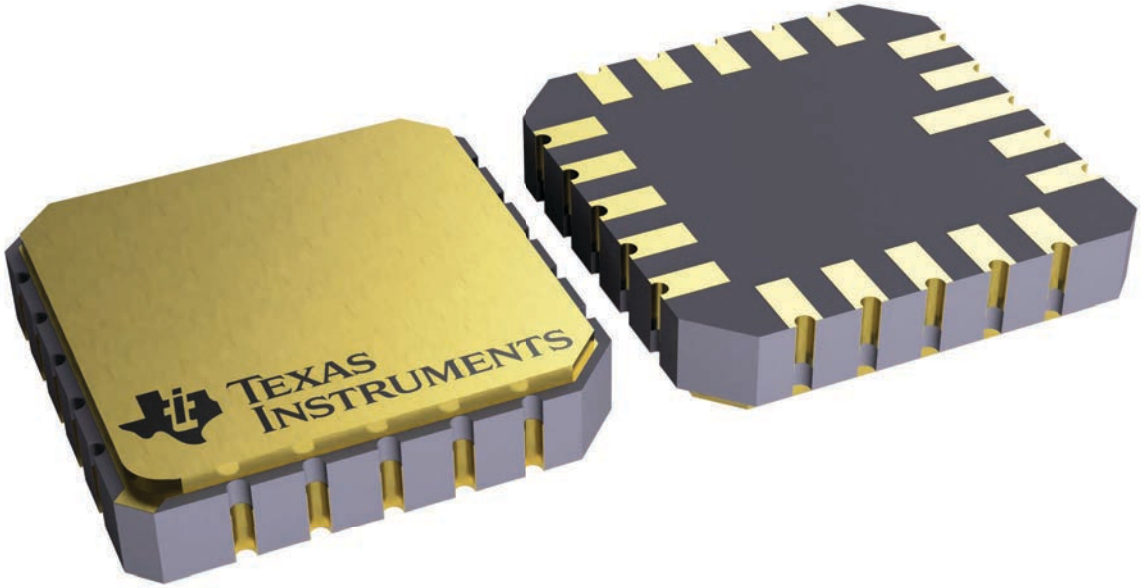

4229370VA\

J 14 CDIP - 5.08 mm max height

CERAMIC DUAL IN LINE PACKAGE

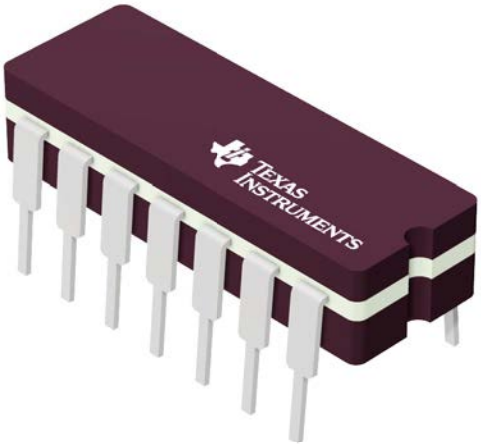

Images above are just a representation of the package family, actual package may vary.
Refer to the product data sheet for package details.

4040083-5/G

PACKAGE OUTLINE

J0014A

CDIP - 5.08 mm max height

CERAMIC DUAL IN LINE PACKAGE

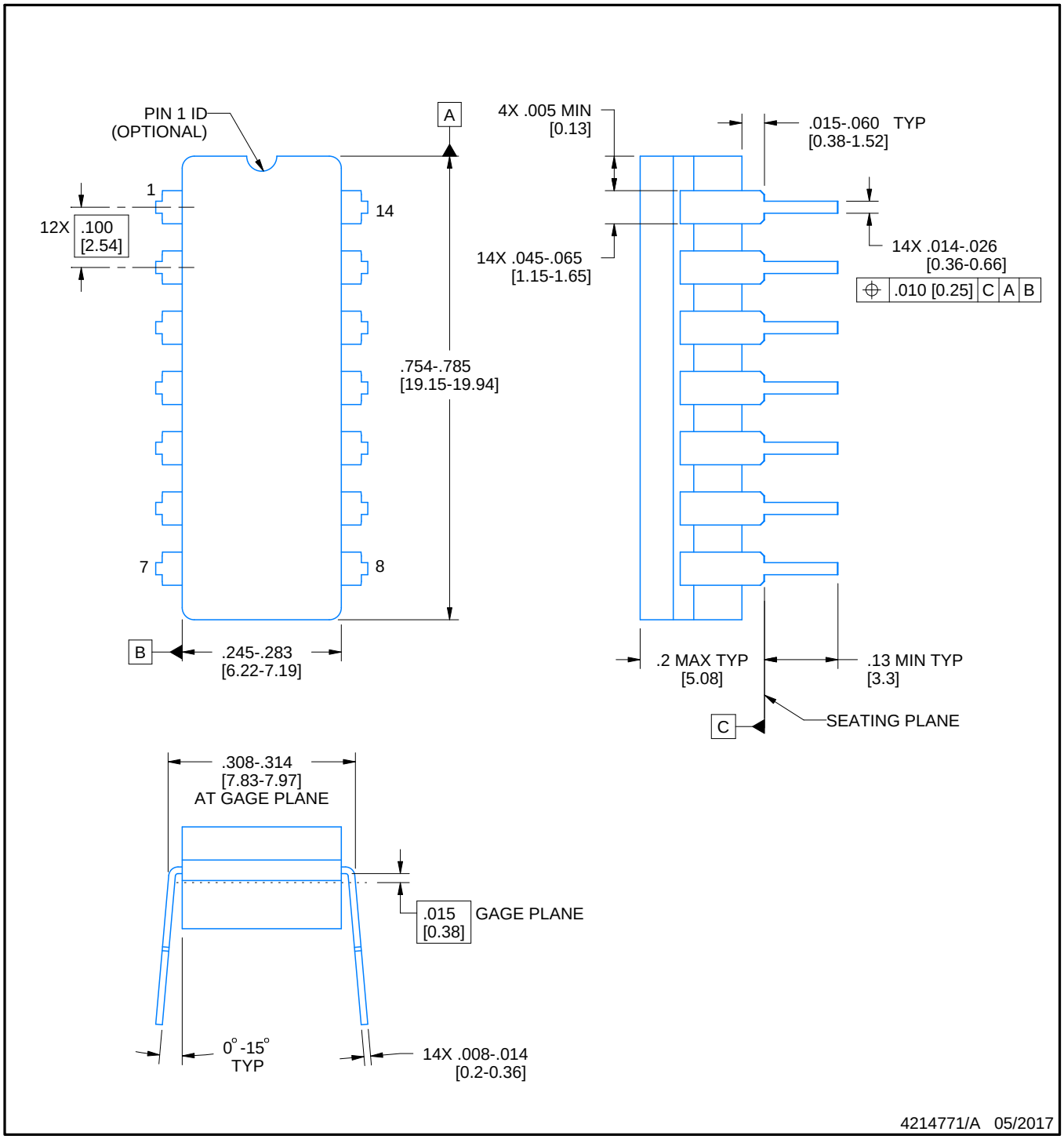

NOTES:

1. All controlling linear dimensions are in inches. Dimensions in brackets are in millimeters. Any dimension in brackets or parenthesis are for reference only. Dimensioning and tolerancing per ASME Y14.5M.
2. This drawing is subject to change without notice.
3. This package is hermitically sealed with a ceramic lid using glass frit.
4. Index point is provided on cap for terminal identification only and on press ceramic glass frit seal only.
5. Falls within MIL-STD-1835 and GDIP1-T14.

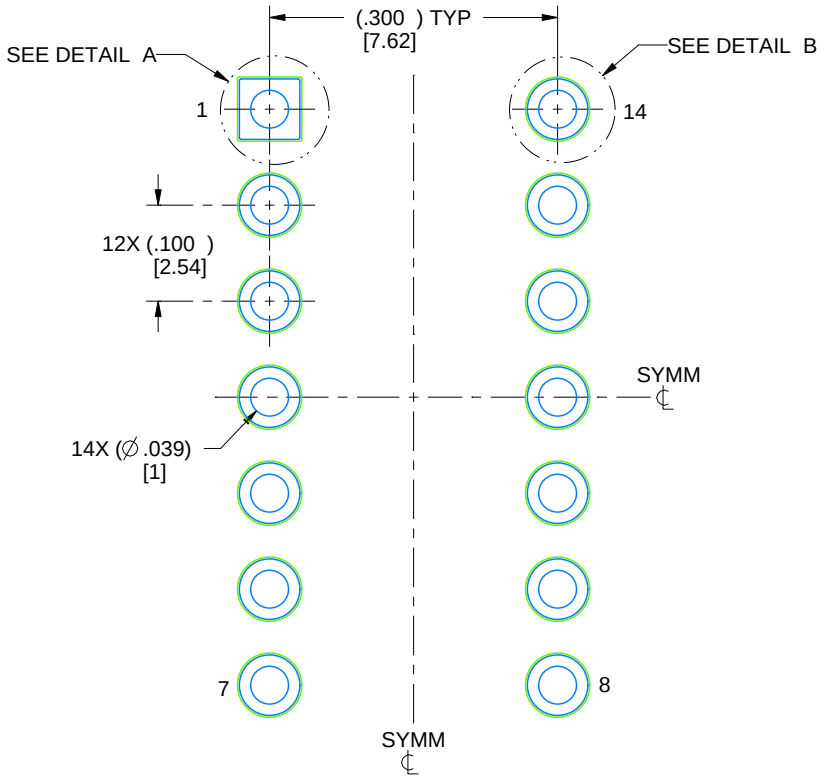

LAND PATTERN EXAMPLE
NON-SOLDER MASK DEFINED
SCALE: 5X

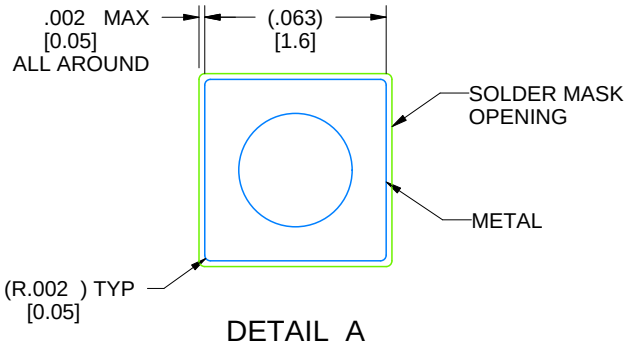

DETAIL A
SCALE: 15X

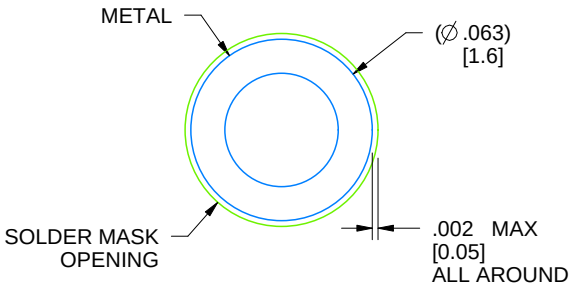

DETAIL B
13X, SCALE: 15X

4214771/A 05/2017

N (R–PDIP–T**) PLASTIC DUAL–IN–LINE PACKAGE

16 PINS SHOWN

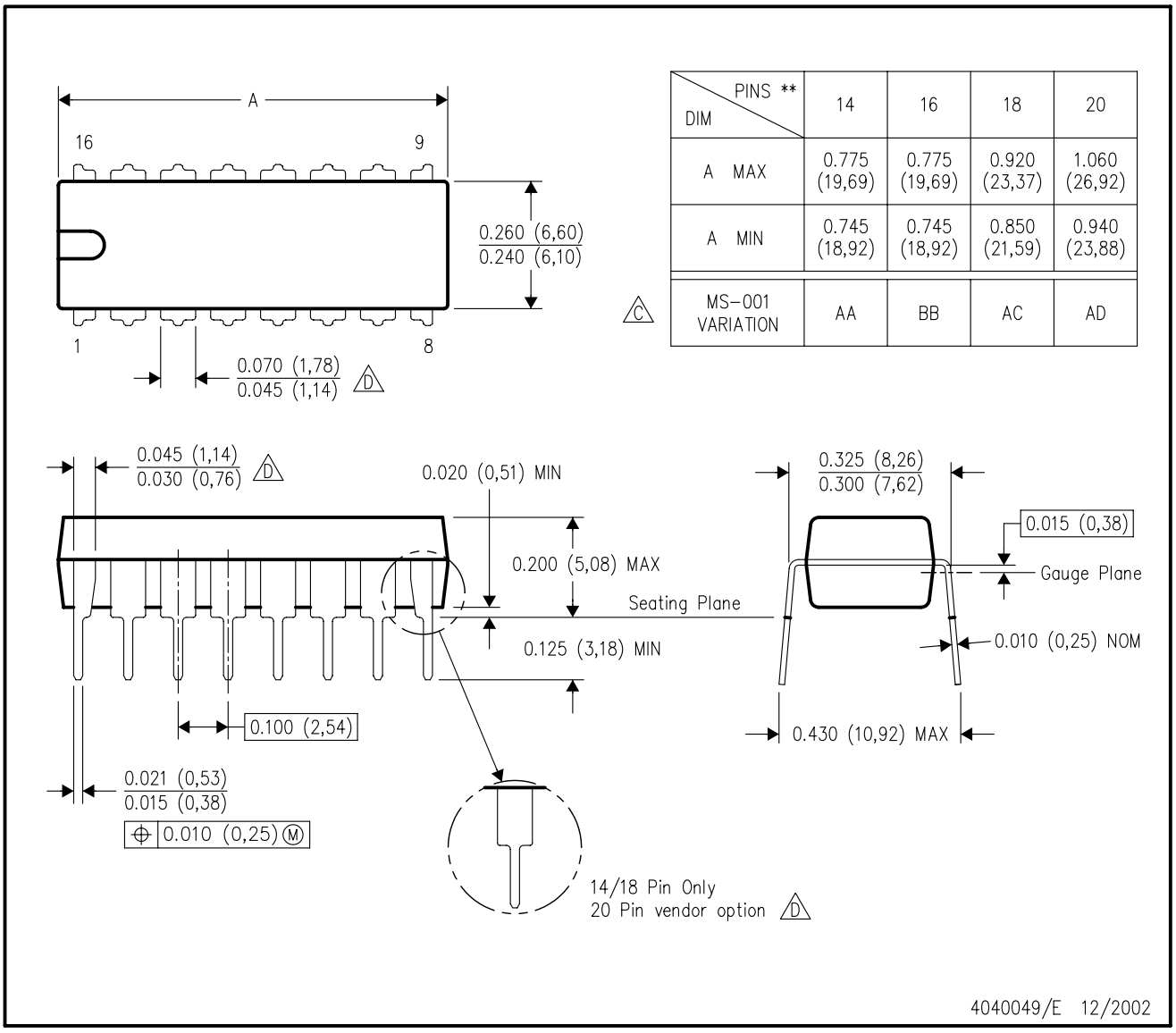

DIM \ PINS **	14	16	18	20
A MAX	0.775 (19,69)	0.775 (19,69)	0.920 (23,37)	1.060 (26,92)
A MIN	0.745 (18,92)	0.745 (18,92)	0.850 (21,59)	0.940 (23,88)
MS–001 VARIATION (C)	AA	BB	AC	AD

NOTES:
A. All linear dimensions are in inches (millimeters).
B. This drawing is subject to change without notice.
C. Falls within JEDEC MS–001, except 18 and 20 pin minimum body length (Dim A).
D. The 20 pin end lead shoulder width is a vendor option, either half or full width.

PW0014A

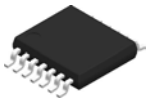

PACKAGE OUTLINE

TSSOP - 1.2 mm max height

SMALL OUTLINE PACKAGE

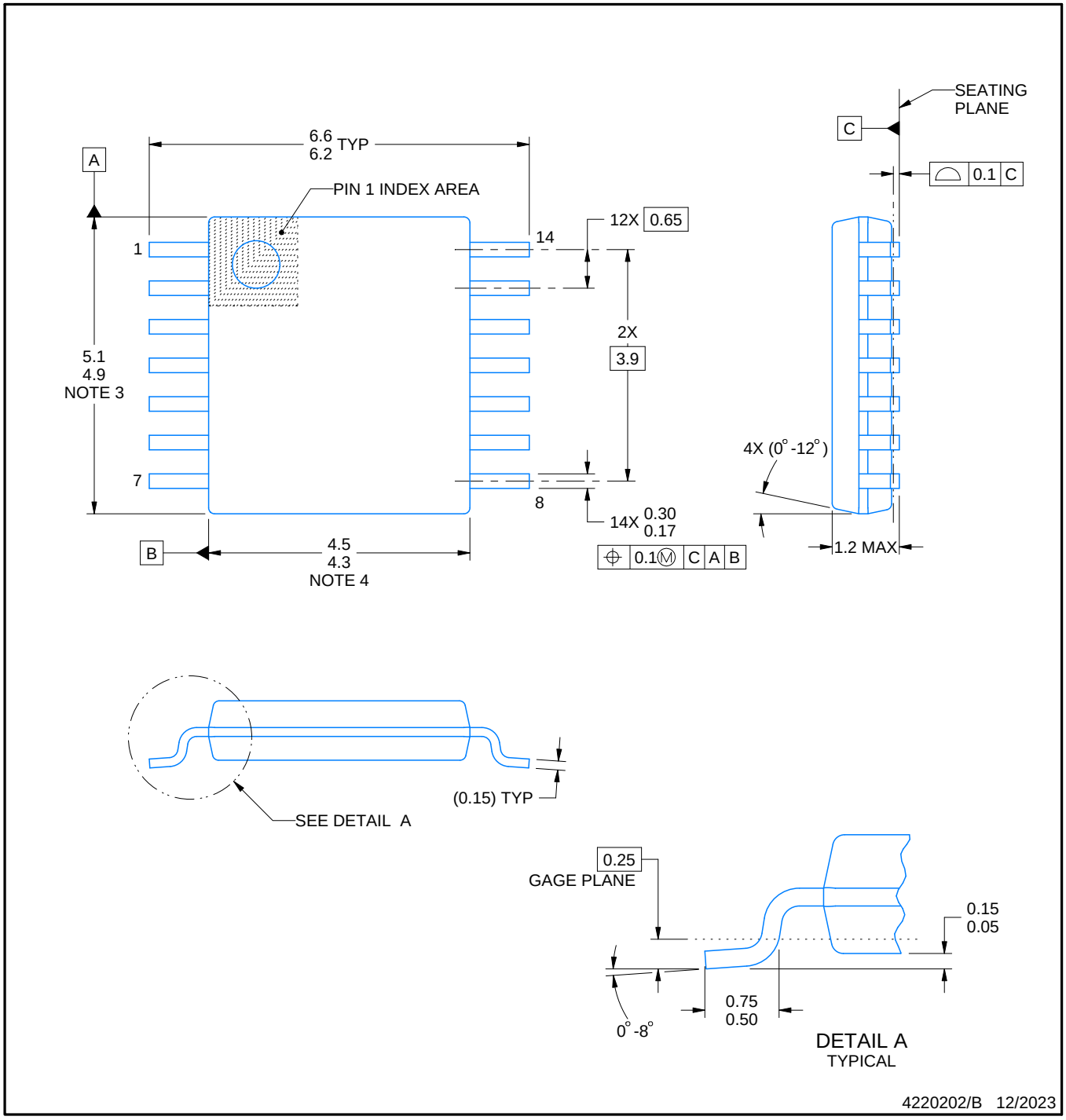

NOTES:

1. All linear dimensions are in millimeters. Any dimensions in parenthesis are for reference only. Dimensioning and tolerancing per ASME Y14.5M.
2. This drawing is subject to change without notice.
3. This dimension does not include mold flash, protrusions, or gate burrs. Mold flash, protrusions, or gate burrs shall not exceed 0.15 mm per side.
4. This dimension does not include interlead flash. Interlead flash shall not exceed 0.25 mm per side.
5. Reference JEDEC registration MO-153.

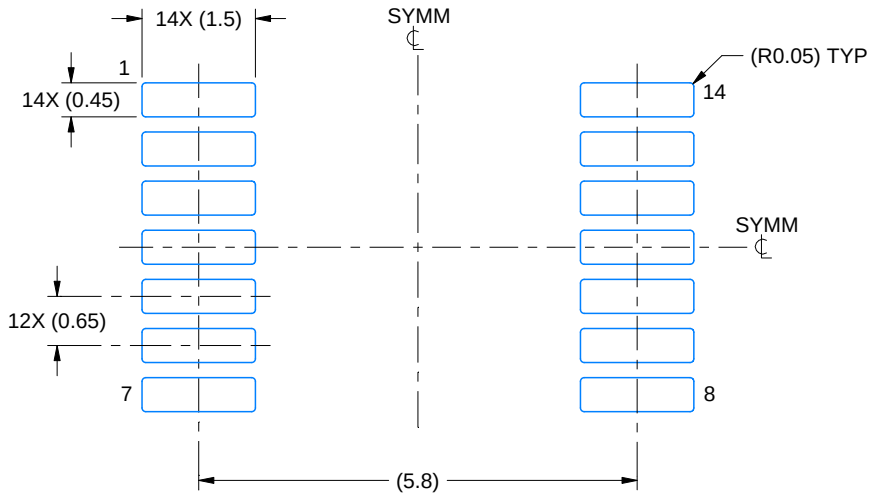

LAND PATTERN EXAMPLE
EXPOSED METAL SHOWN
SCALE: 10X

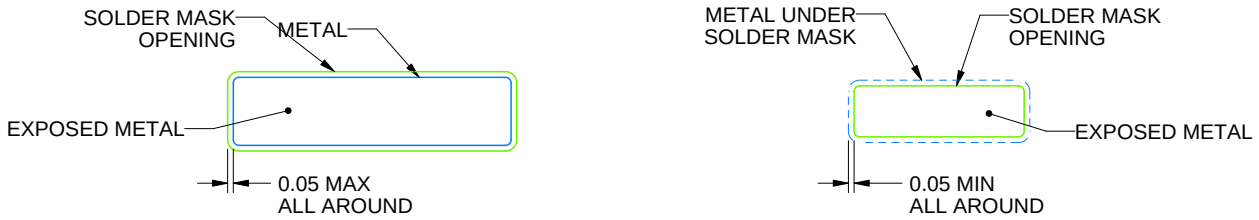

NON-SOLDER MASK DEFINED (PREFERRED)

SOLDER MASK DEFINED

SOLDER MASK DETAILS

4220202/B 12/2023

NOTES: (continued)

6. Publication IPC-7351 may have alternate designs.
7. Solder mask tolerances between and around signal pads can vary based on board fabrication site.

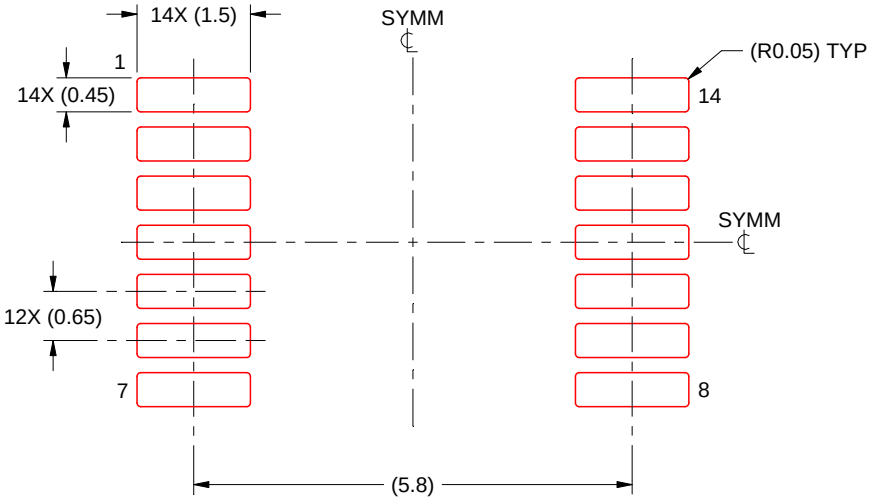

SOLDER PASTE EXAMPLE
BASED ON 0.125 mm THICK STENCIL
SCALE: 10X

4220202/B 12/2023

NOTES: (continued)

8. Laser cutting apertures with trapezoidal walls and rounded corners may offer better paste release. IPC-7525 may have alternate design recommendations.
9. Board assembly site may have different recommendations for stencil design.

重要なお知らせと免責事項

TI は、技術データと信頼性データ (データシートを含みます)、設計リソース (リファレンス・デザインを含みます)、アプリケーションや設計に関する各種アドバイス、Web ツール、安全性情報、その他のリソースを、欠陥が存在する可能性のある「現状のまま」提供しており、商品性および特定目的に対する適合性の黙示保証、第三者の知的財産権の非侵害保証を含むいかなる保証も、明示的または黙示的にかかわらず拒否します。

これらのリソースは、TI 製品を使用する設計の経験を積んだ開発者への提供を意図したものです。(1) お客様のアプリケーションに適した TI 製品の選定、(2) お客様のアプリケーションの設計、検証、試験、(3) お客様のアプリケーションに該当する各種規格や、その他のあらゆる安全性、セキュリティ、規制、または他の要件への確実な適合に関する責任を、お客様のみが単独で負うものとします。

上記の各種リソースは、予告なく変更される可能性があります。これらのリソースは、リソースで説明されている TI 製品を使用するアプリケーションの開発の目的でのみ、TI はその使用をお客様に許諾します。これらのリソースに関して、他の目的で複製することや掲載することは禁止されています。TI や第三者の知的財産権のライセンスが付与されている訳ではありません。お客様は、これらのリソースを自身で使用した結果発生するあらゆる申し立て、損害、費用、損失、責任について、TI およびその代理人を完全に補償するものとし、TI は一切の責任を拒否します。

TI の製品は、TI の販売条件、または ti.com やかかる TI 製品の関連資料などのいずれかを通じて提供する適用可能な条項の下で提供されています。TI がこれらのリソースを提供することは、適用される TI の保証または他の保証の放棄の拡大や変更を意味するものではありません。

お客様がいかなる追加条項または代替条項を提案した場合でも、TI はそれらに異議を唱え、拒否します。

郵送先住所：Texas Instruments, Post Office Box 655303, Dallas, Texas 75265
Copyright © 2024, Texas Instruments Incorporated