SNx4AHC14 ヘキサ・シュミット・トリガ・インバータ

1 特長

- JESD 22 を上回る ESD 保護:
  - 2000V、人体モデル (A114-A)
  - 200V、マシン モデル(A115-A)
  - 1000V、デバイス帯電モデル (C101)
- 動作範囲:2V～5.5V
- 5V で ±8mA の出力駆動能力
- シュミットトリガ入力により入力ノイズ耐性を実現
- 低消費電力:I_{CC} = 20μA (最大値)
- JESD 17 準拠で
  250mA 超のラッチアップ性能

2 アプリケーション

- UPS
- 白物家電
- コンピュータ周辺機器
- プリンタ
- AC サーボ・ドライブ
- デスクトップ・コンピュータ

3 概要

SNx4AHC14 デバイスは、6 つの独立したインバータを備えています。これらのデバイスはブール関数 Y = $\overline{A}$ を実行します。

各回路は、独立したインバータとして機能しますが、シュミット・トリガ動作のため、正方向 (V_{T+}) と負方向 (V_{T-}) の信号に対する入力スレッショルド・レベルが異なります。

製品情報

部品番号	定格	パッケージ(1)
SN54AHC14	軍用	J (CDIP、14)
		W (CFP、14)
		FK (LCCC、20)
		BQA (WQFN、14)
SN74AHC14	商用	D (SOIC、14)
		DB (SSOP、14)
		N (PDIP、14)
		NS (SO、14)
		PW (TSSOP、14)
		DGV (TVSOP、14)
		RGY (VQFN、14)
		BQA (WQFN、14)

(1) 利用可能なすべてのパッケージについては、データシートの末尾にある注文情報を参照してください。

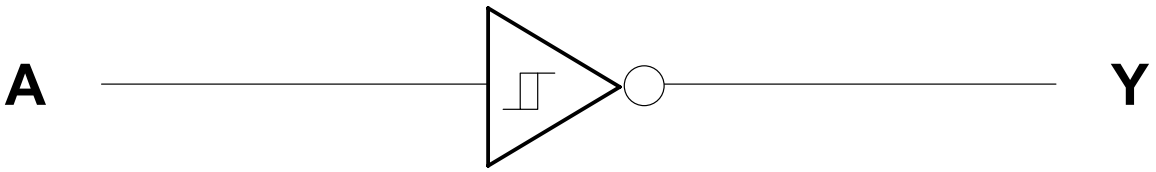

Copyright © 2016, Texas Instruments Incorporated

論理図 (正論理)

このリソースの元の言語は英語です。翻訳は概要を便宜的に提供するもので、自動化ツール (機械翻訳) を使用していることがあり、TI では翻訳の正確性および妥当性につきましては一切保証いたしません。実際の設計などの前には、ti.com で必ず最新の英語版をご参照くださいますようお願いいたします。

Table of Contents

1 特長 1
2 アプリケーション 1
3 概要 1
4 Pin Configuration and Functions 3
5 Specifications 4
5.1 Absolute Maximum Ratings 4
5.2 ESD Ratings 4
5.3 Recommended Operating Conditions 4
5.4 Thermal Information 5
5.5 Electrical Characteristics 5
5.6 Switching Characteristics, V_{CC} = 3.3 V ± 0.3 V 7
5.7 Switching Characteristics, V_{CC} = 5 V ± 0.5 V 7
5.8 Typical Characteristics 7
6 Parameter Measurement Information 8
7 Detailed Description 10
7.1 Overview 10
7.2 Functional Block Diagram 10
7.3 Feature Description 10
7.4 Device Functional Modes 10
8 Application and Implementation 11
8.1 Application Information 11
8.2 Typical Application 11
8.3 Power Supply Recommendations 12
8.4 Layout 12
9 Device and Documentation Support 13
9.1 Documentation Support 13
9.2 ドキュメントの更新通知を受け取る方法 13
9.3 サポート・リソース 13
9.4 Trademarks 13
9.5 静電気放電に関する注意事項 13
9.6 用語集 13
10 Revision History 13
11 Mechanical, Packaging, and Orderable Information 14

Copyright © 2024 Texas Instruments Incorporated

4 Pin Configuration and Functions

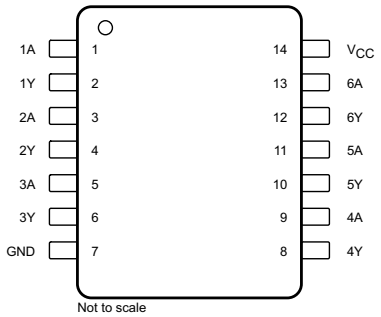

図 4-1. D, DB, DGV, J, N, NS, PW, or W Package, 14-Pin SOIC, SSOP, TVSOP, CDIP, PDIP, SO, TSSOP, or CFP (Top View)

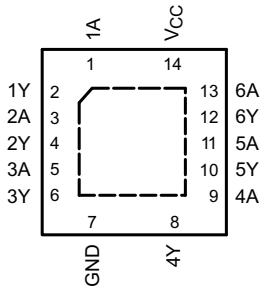

図 4-2. RGY or BQA Package, 14-Pin VQFN or WQFN (Top View)

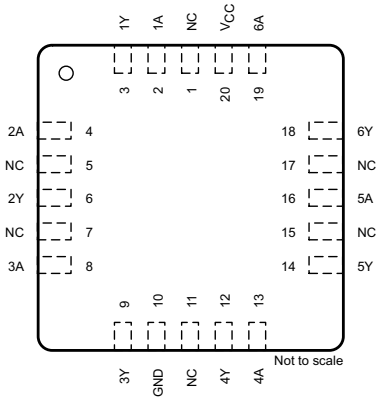

図 4-3. FK Package, 20-Pin LCCC (Top View)

表 4-1. Pin Functions

PIN			TYPE(1)	DESCRIPTION
NAME	SOIC, SSOP, TVSOP, CDIP, PDIP, SO, TSSOP, CFP, VQFN	LCCC		
1A	1	2	I	Channel 1 Input
1Y	2	3	O	Channel 1 Output
2A	3	4	I	Channel 2 Input
2Y	4	6	O	Channel 2 Output
3A	5	8	I	Channel 3 Input
3Y	6	9	O	Channel 3 Output
4A	9	13	I	Channel 4 Input
4Y	8	12	O	Channel 4 Output
5A	11	16	I	Channel 5 Input
5Y	10	14	O	Channel 5 Output
6A	13	19	I	Channel 6 Input
6Y	12	18	O	Channel 6 Output
GND	7	10	—	Ground
NC	—	1, 5, 7, 11, 15, 17	—	No internal connection
V_{CC}	14	20	—	Power supply

(1) I = input, O = output

Copyright © 2024 Texas Instruments Incorporated

5 Specifications

5.1 Absolute Maximum Ratings

over operating free-air temperature range (unless otherwise noted)[1]

			MIN	MAX	UNIT
V_{CC}	Supply voltage		–0.5	7	V
V_I [2]	Input voltage		–0.5	7	V
V_O [2]	Output voltage		–0.5	V_{CC} + 0.5	V
I_{IK}	Input clamp current	$V_I < 0$		–20	mA
I_{OK}	Output clamp current	$V_O < 0$ or $V_O > V_{CC}$		±20	mA
I_O	Continuous output current	$V_O = 0$ to V_{CC}		±25	mA
	Continuous current through V_{CC} or GND			±50	mA
T_J	Virtual operating junction temperature			150	°C
T_{stg}	Storage temperature		–65	150	°C

(1) Stresses beyond those listed under *Absolute Maximum Ratings* may cause permanent damage to the device. These are stress ratings only, which do not imply functional operation of the device at these or any other conditions beyond those indicated under *Recommended Operating Conditions*. Exposure to absolute-maximum-rated conditions for extended periods may affect device reliability.
(2) The input and output voltage ratings may be exceeded if the input and output current ratings are observed.

5.2 ESD Ratings

			VALUE	UNIT
$V_{(ESD)}$	Electrostatic discharge	Human-body model (HBM), per ANSI/ESDA/JEDEC JS-001[1]	±2000	V
		Charged-device model (CDM), per JEDEC specification JESD22-C101[2]	±1000	

(1) JEDEC document JEP155 states that 500-V HBM allows safe manufacturing with a standard ESD control process.
(2) JEDEC document JEP157 states that 250-V CDM allows safe manufacturing with a standard ESD control process.

5.3 Recommended Operating Conditions

over operating free-air temperature range (unless otherwise noted)[1]

			MIN	MAX	UNIT
V_{CC}	Supply voltage		2	5.5	V
V_I	Input voltage		0	5.5	V
V_O	Output voltage		0	V_{CC}	V
I_{OH}	High-level output current	V_{CC} = 2 V		–50	µA
		V_{CC} = 3.3 V ± 0.3 V		–4	mA
		V_{CC} = 5 V ± 0.5 V		–8	
I_{OL}	Low-level output current	V_{CC} = 2 V		50	µA
		V_{CC} = 3.3 V ± 0.3 V		4	mA
		V_{CC} = 5 V ± 0.5 V		8	
T_A	Operating free-air temperature	SN54AHC14	–55	125	°C
		SN74AHC14	–40	125	

(1) All unused inputs of the device must be held at V_{CC} or GND to ensure proper device operation. See TI application report, *Implications of Slow or Floating CMOS Inputs* (SCBA004).

Copyright © 2024 Texas Instruments Incorporated

5.4 Thermal Information

THERMAL METRIC[1]		SN74AHC14								UNIT
		D (SOIC)	DB (SSOP)	DGV (TVSOP)	N (PDIP)	NS (SO)	PW (TSSOP)	RGY (VQFN)	BQA (WQFN)	
		14 PINS	14 PINS	14 PINS	14 PINS	14 PINS	14 PINS	14 PINS	14 PINS	
$R_{\theta JA}$	Junction-to-ambient thermal resistance	124.5	137.8	141.9	61.9	94.7	147.7	87.1	88.3	°C/W
$R_{\theta JC(top)}$	Junction-to-case (top) thermal resistance	78.8	90	61.1	49.5	52.5	77.4	92.6	90.9	°C/W
$R_{\theta JB}$	Junction-to-board thermal resistance	81	98.3	71.3	41.7	53.4	90.9	62.5	56.8	°C/W
ψ_{JT}	Junction-to-top characterization parameter	37	42.7	9.7	34.7	21.3	27.2	22.8	9.9	°C/W
ψ_{JB}	Junction-to-board characterization parameter	80.6	97	70.6	41.7	53.1	90.2	61.7	56.7	°C/W
$R_{\theta JC(bot)}$	Junction-to-case (bottom) thermal resistance	N/A	N/A	N/A	N/A	N/A	N/A	45.1	33.4	°C/W

(1) For more information about traditional and new thermal metrics, see the *Semiconductor and IC Package Thermal Metrics* application report.

5.5 Electrical Characteristics

over operating free-air temperature range (unless otherwise noted)

PARAMETER		TEST CONDITIONS		MIN	TYP	MAX	UNIT
V_{T+}	Positive-going input threshold voltage		V_{CC} = 3 V	1.2		2.2	V
			V_{CC} = 4.5 V	1.75		3.15	
			V_{CC} = 5.5 V	2.15		3.85	
V_{T-}	Negative-going input threshold voltage		V_{CC} = 3 V	0.9		1.9	V
			V_{CC} = 4.5 V	1.35		2.75	
			V_{CC} = 5.5 V	1.65		3.35	
ΔV_T	Hysteresis ($V_{T+} – V_{T-}$)		V_{CC} = 3 V	0.3		1.2	V
			V_{CC} = 4.5 V	0.4		1.4	
			V_{CC} = 5.5 V	0.5		1.6	
V_{OH}		I_{OH} = –50 µA	V_{CC} = 2 V	1.9	2		V
			V_{CC} = 3 V	2.9	3		
			V_{CC} = 4.5 V	4.4	4.5		
		I_{OH} = –4 mA, V_{CC} = 3 V	T_A = 25°C	2.58			
			SNx4AHC14	2.48			
		I_{OL} = –8 mA, V_{CC} = 4.5 V	T_A = 25°C	3.94			
			SNx4AHC14	3.8			

5.5 Electrical Characteristics (続き)

over operating free-air temperature range (unless otherwise noted)

PARAMETER		TEST CONDITIONS			MIN	TYP	MAX	UNIT
V_{OL}		I_{OH} = 50 µA	V_{CC} = 2 V				0.1	V
			V_{CC} = 3 V				0.1	
			V_{CC} = 4.5 V				0.1	
		I_{OH} = 4 mA, V_{CC} = 3 V	T_A = 25°C				0.36	
			SN54AHC14				0.5	
			SN74AHC14	T_A = –40°C to 85°C			0.44	
				T_A = –40°C to 125°C			0.5	
		I_{OL} = 8 mA, V_{CC} = 4.5 V	T_A = 25°C				0.36	
			SN54AHC14				0.5	
			SN74AHC14	T_A = –40°C to 85°C			0.44	
				T_A = –40°C to 125°C			0.5	
I_I		V_I = 5.5 V or GND, V_{CC} = 0 V to 5.5 V	T_A = 25°C				±0.1	µA
			SNx4AHC14				±1[(1)]	
I_{CC}		V_I = V_{CC} or GND, I_O = 0, V_{CC} = 5.5 V	T_A = 25°C				1	µA
			SNx4AHC14				20	
C_I		V_I = V_{CC} or GND, V_{CC} = 5 V	T_A = 25°C			2	10	pF
			SN74AHC14				10	
C_{pd}	Power dissipation capacitance	No load, f = 1 MHz, V_{CC} = 5 V				9		pF
NOISE[(2)]								
$V_{OL(P)}$	Quiet output, maximum dynamic V_{OL}	V_{CC} = 5 V, C_L = 50 pF, T_A = 25°C				0.8		V
$V_{OL(V)}$	Quiet output, minimum dynamic V_{OL}	V_{CC} = 5 V, C_L = 50 pF, T_A = 25°C				–0.4		V
$V_{OH(V)}$	Quiet output, minimum dynamic V_{OH}	V_{CC} = 5 V, C_L = 50 pF, T_A = 25°C				4.6		V
$V_{IH(D)}$	High-level dynamic input voltage	V_{CC} = 5 V, C_L = 50 pF, T_A = 25°C			3.5			V
$V_{IL(D)}$	Low-level dynamic input voltage	V_{CC} = 5 V, C_L = 50 pF, T_A = 25°C					1.5	V

(1) On products compliant to MIL-PRF-38535, this parameter is not production tested at V_{CC} = 0 V.
(2) Characteristics are for surface-mount packages only.

Copyright © 2024 Texas Instruments Incorporated

5.6 Switching Characteristics, V_{CC} = 3.3 V ± 0.3 V

V_{CC} = 3.3 V ± 0.3 V and over operating free-air temperature range (unless otherwise noted; see *Parameter Measurement Information*)

PARAMETER	TEST CONDITIONS		MIN	TYP	MAX	UNIT
t_{PLH}	From A (input) to Y (output), C_L = 15 pF	T_A = 25°C	8.3[(1)]		12.8[(1)]	ns
		SN54AHC14	1[(1)]		15[(1)]	
		SN74AHC14	1		16	
t_{PHL}	From A (input) to Y (output), C_L = 15 pF	T_A = 25°C	8.3[(1)]		12.8[(1)]	ns
		SN54AHC14	1[(1)]		15[(1)]	
		SN74AHC14	1		16	
t_{PLH}	From A (input) to Y (output), C_L = 50 pF	T_A = 25°C	10.8		16.3	ns
		SN54AHC14	1		18.5	
		SN74AHC14	1		19.5	
t_{PHL}	From A (input) to Y (output), C_L = 50 pF	T_A = 25°C	10.8		16.3	ns
		SN54AHC14	1		18.5	
		SN74AHC14	1		19.5	

(1) On products compliant to MIL-PRF-38535, this parameter is not production tested.

5.7 Switching Characteristics, V_{CC} = 5 V ± 0.5 V

V_{CC} = 5 V ± 0.5 V and over operating free-air temperature range (unless otherwise noted; see *Parameter Measurement Information*)

PARAMETER	TEST CONDITIONS		MIN	TYP	MAX	UNIT
t_{PLH}	From A (input) to Y (output), C_L = 15 pF	T_A = 25°C	5.5[(1)]		8.6[(1)]	ns
		SN54AHC14	1[(1)]		10[(1)]	
		SN74AHC14	1		10	
t_{PHL}	From A (input) to Y (output), C_L = 15 pF	T_A = 25°C	5.5[(1)]		8.6[(1)]	ns
		SN54AHC14	1[(1)]		10[(1)]	
		SN74AHC14	1		10	
t_{PLH}	From A (input) to Y (output), C_L = 50 pF	T_A = 25°C	7		10.6	ns
		SNx4AHC14	1		12	
t_{PHL}	From A (input) to Y (output), C_L = 50 pF	T_A = 25°C	7		10.6	ns
		SNx4AHC14	1		12	

5.8 Typical Characteristics

C_L = 50 pF (unless otherwise noted)

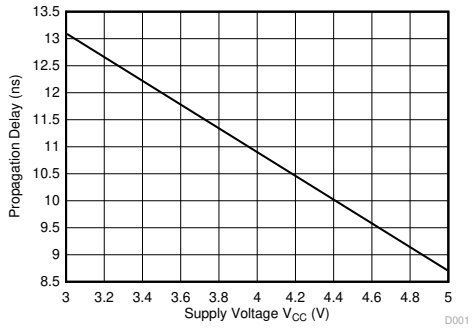

図 5-1. Propagation Delay vs Supply Voltage

6 Parameter Measurement Information

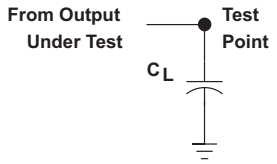

図 6-1. Load Circuit For Totem-Pole Outputs

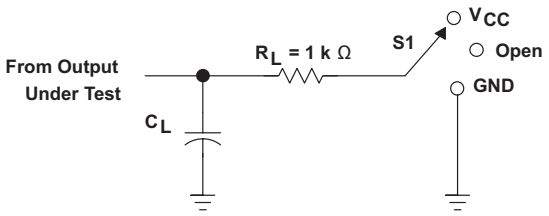

図 6-2. Load Circuit For 3-State and Open-Drain Outputs

表 6-1. Measurement Information

TEST	S1
t_{PLH}, t_{PHL}	Open
t_{PLZ}, t_{PZL}	V_{CC}
t_{PHZ}, t_{PZH}	GND
Open drain	V_{CC}

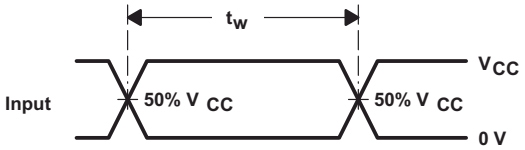

図 6-3. Voltage Waveforms Pulse Duration

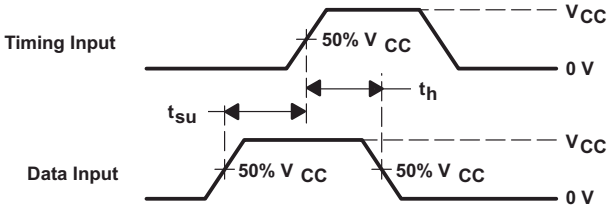

図 6-4. Voltage Waveforms Setup and Hold Times

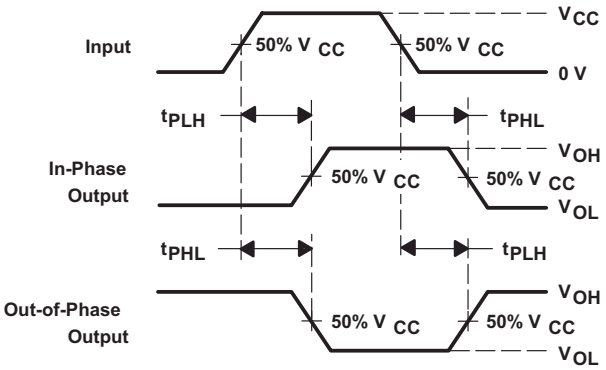

図 6-5. Voltage Waveforms Propagation Delay Times Inverting and Noninverting Outputs

Copyright © 2024 Texas Instruments Incorporated

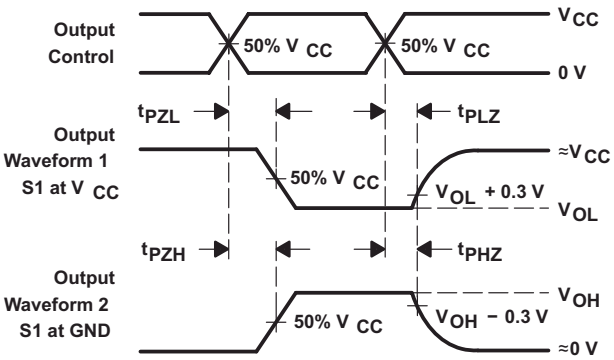

A. C_L includes probe and jig capacitance.
B. Waveform 1 is for an output with internal conditions such that the output is low except when disabled by the output control. Waveform 2 is for an output with internal conditions such that the output is high except when disabled by the output control.
C. All input pulses are supplied by generators having the following characteristics: PRR ≤ 1 MHz, Z_O = 50 Ω, t_r ≤ 3 ns, t_f ≤ 3 ns.
D. The outputs are measured one at a time with one input transition per measurement.
E. All parameters and waveforms are not applicable to all devices.

図 6-6. Voltage Waveforms Enable and Disable Times Low- and High-Level Enabling

7 Detailed Description

7.1 Overview

The SNx4AHC14 Schmitt-Trigger devices contain six independent inverters. They perform the Boolean function $Y = \overline{A}$ in positive logic.

Schmitt-Trigger inputs are designed to provide a minimum separation between positive and negative switching thresholds. This allows for noisy or slow inputs that would cause problems such as oscillation or excessive current draw with normal CMOS inputs.

7.2 Functional Block Diagram

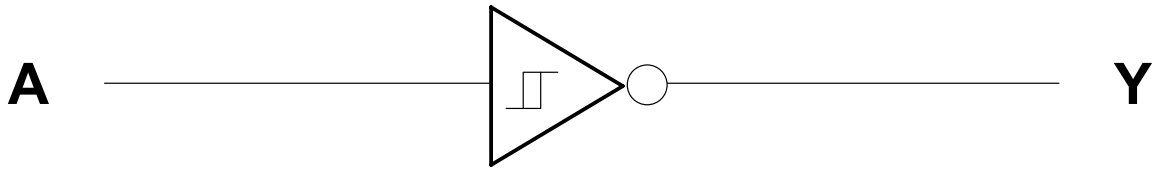

Copyright © 2016, Texas Instruments Incorporated

7.3 Feature Description

The wide operating range of the device allows it to be used in a variety of systems that use different logic levels. The outpus can drive up to 10 LSTTL loads each. The balanced drive outputs can source or sink 8 mA at 5-V V_{CC}.

7.4 Device Functional Modes

表 7-1 lists the functional modes of the SNx4AHC14.

表 7-1. Function Table

INPUT A	OUTPUT Y
H	L
L	H

Copyright © 2024 Texas Instruments Incorporated

8 Application and Implementation

注

以下のアプリケーション情報は、TI の製品仕様に含まれるものではなく、TI ではその正確性または完全性を保証いたしません。個々の目的に対する製品の適合性については、お客様の責任で判断していただくことになります。お客様は自身の設計実装を検証しテストすることで、システムの機能を確認する必要があります。

8.1 Application Information

The SN74AHC14 device is a Schmitt-Trigger input CMOS device that can be used for a multitude of inverting buffer type functions. The application shown here takes advantage of the Schmitt-Trigger inputs to produce a delay for a logic input.

8.2 Typical Application

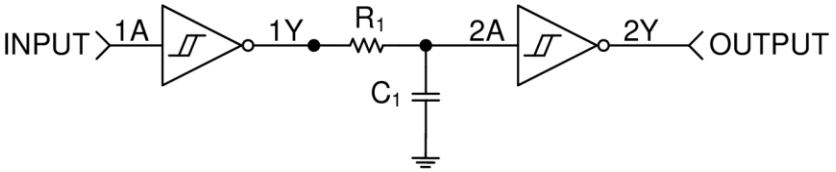

Copyright © 2016, Texas Instruments Incorporated

図 8-1. Simplified Application Schematic

8.2.1 Design Requirements

This device uses CMOS technology. Take care to avoid bus contention because it can drive currents that would exceed maximum limits. Parallel output drive can create fast edges into light loads so consider routing and load conditions to prevent ringing.

8.2.2 Detailed Design Procedure

This circuit is designed around an RC network that produces a slow input to the second inverter. The RC time constant, τ, is calculated from: $\tau = RC$.

The delay time for this circuit is from $t_{delay(min)} = -\ln |1 - V_{T+(min)} / V_{CC}|\ \tau$ to $t_{delay(max)} = -\ln |1 - V_{T+(max)} / V_{CC}|\ \tau$. It must be noted that the delay is consistent for each device, but because the switching threshold is only ensured between the minimum and maximum value, the output pulse length varies between devices. These values must be calculated by using the minimum and maximum V_{T+} values in the *Electrical Characteristics*.

The resistor value must be chosen such that the maximum current to and from the SN74AHC14 is 8 mA at 5-V V_{CC}.

8.2.3 Application Curve

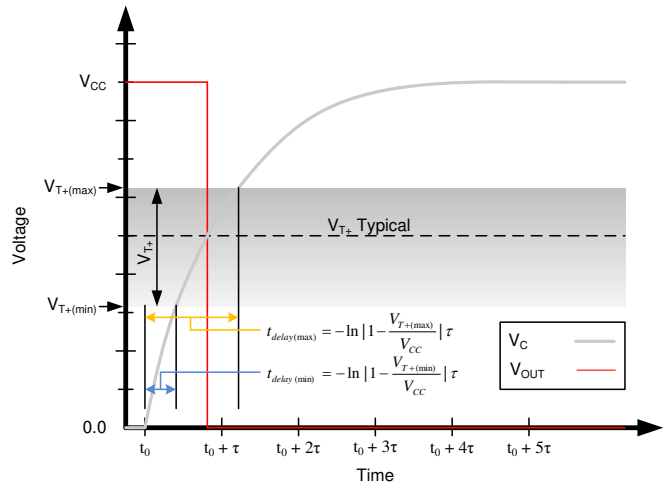

図 8-2. Ideal Capacitor Voltage and Output Voltage With Positive Switching Threshold

8.3 Power Supply Recommendations

The power supply can be any voltage between the minimum and maximum supply voltage rating located in the *Recommended Operating Conditions*. The V_{CC} terminal must have a good bypass capacitor to prevent power disturbance. TI recommends using a 0.1-µF capacitor on the V_{CC} terminal, and must be placed as close as possible to the pin for best results.

8.4 Layout

8.4.1 Layout Guidelines

When using multiple bit logic devices, inputs must never float. In many cases, functions or parts of functions of digital logic devices are unused, for example, when only two inputs of a triple-input AND gate are used or only three of the four buffer gates are used. Such inputs must not be left unconnected because the undefined voltages at the outside connections result in undefined operational states. All unused inputs of digital logic devices must be connected to a high or low bias to prevent them from floating. The logic level that must be applied to any particular unused input depends on the function of the device. Generally they are tied to GND or V_{CC}, whichever makes more sense or is more convenient. Floating outputs are generally acceptable, unless the part is a transceiver.

8.4.2 Layout Example

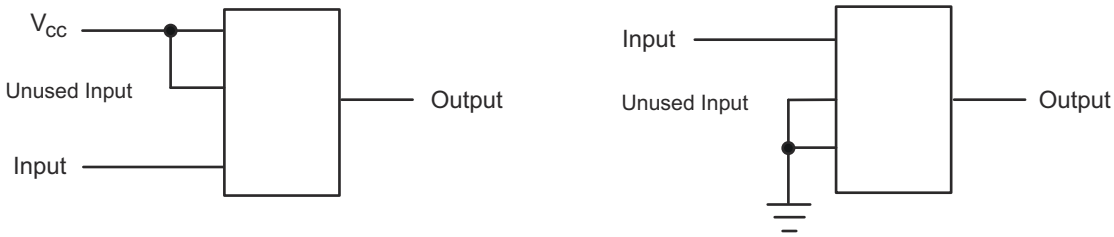

図 8-3. Layout Diagram

Copyright © 2024 Texas Instruments Incorporated

9 Device and Documentation Support

9.1 Documentation Support

9.1.1 Related Documentation

For related documentation, see the following:

- Texas Instruments, *Implications of Slow or Floating CMOS Inputs* application report

9.2 ドキュメントの更新通知を受け取る方法

ドキュメントの更新についての通知を受け取るには、ti.com のデバイス製品フォルダを開いてください。「更新の通知を受け取る」をクリックして登録すると、変更されたすべての製品情報に関するダイジェストを毎週受け取れます。変更の詳細については、修正されたドキュメントに含まれている改訂履歴をご覧ください。

9.3 サポート・リソース

TI E2E™ サポート・フォーラムは、エンジニアが検証済みの回答と設計に関するヒントをエキスパートから迅速かつ直接得ることができる場所です。既存の回答を検索したり、独自の質問をしたりすることで、設計で必要な支援を迅速に得ることができます。

リンクされているコンテンツは、該当する貢献者により、現状のまま提供されるものです。これらは TI の仕様を構成するものではなく、必ずしも TI の見解を反映したものではありません。TI の使用条件を参照してください。

9.4 Trademarks

TI E2E™ is a trademark of Texas Instruments.
すべての商標は、それぞれの所有者に帰属します。

9.5 静電気放電に関する注意事項

この IC は、ESD によって破損する可能性があります。テキサス・インスツルメンツは、IC を取り扱う際には常に適切な注意を払うことを推奨します。正しい取り扱いおよび設置手順に従わない場合、デバイスを破損するおそれがあります。

ESD による破損は、わずかな性能低下からデバイスの完全な故障まで多岐にわたります。精密な IC の場合、パラメータがわずかに変化するだけで公表されている仕様から外れる可能性があるため、破損が発生しやすくなっています。

9.6 用語集

テキサス・インスツルメンツ用語集　　この用語集には、用語や略語の一覧および定義が記載されています。

10 Revision History

資料番号末尾の英字は改訂を表しています。その改訂履歴は英語版に準じています。

Changes from Revision O (October 2023) to Revision P (February 2024)	Page
• Updated RθJA values: DB = 112.4 to 137.8, RGY = 63.8 to 87.1; Updated DB and RGY packages for RθJC(top), RθJB, ΨJT, ΨJB, and RθJC(bot), all values in °C/W	5

Changes from Revision N (June 2023) to Revision O (October 2023)	Page
• Deleted machine model	4
• Updated RθJA values: D = 99.3 to 124.5, PW = 128.8 to 147.7; Updated D and PW packages for RθJC(top), RθJB, ΨJT, ΨJB, and RθJC(bot), all values in °C/W	5

11 Mechanical, Packaging, and Orderable Information

The following pages include mechanical, packaging, and orderable information. This information is the most current data available for the designated devices. This data is subject to change without notice and revision of this document. For browser-based versions of this data sheet, refer to the left-hand navigation.

Copyright © 2024 Texas Instruments Incorporated

PACKAGING INFORMATION

Orderable Device	Status (1)	Package Type	Package Drawing	Pins	Package Qty	Eco Plan (2)	Lead finish/ Ball material (6)	MSL Peak Temp (3)	Op Temp (°C)	Device Marking (4/5)	Samples
5962-9680201Q2A	ACTIVE	LCCC	FK	20	55	Non-RoHS & Green	SNPB	N / A for Pkg Type	-55 to 125	5962-9680201Q2A SNJ54AHC 14FK	Samples
5962-9680201QCA	ACTIVE	CDIP	J	14	25	Non-RoHS & Green	SNPB	N / A for Pkg Type	-55 to 125	5962-9680201QC A SNJ54AHC14J	Samples
5962-9680201QDA	ACTIVE	CFP	W	14	25	Non-RoHS & Green	SNPB	N / A for Pkg Type	-55 to 125	5962-9680201QD A SNJ54AHC14W	Samples
5962-9682001QCA	ACTIVE	CDIP	J	14	25	Non-RoHS & Green	SNPB	N / A for Pkg Type	-55 to 125	5962-9682001QC A SNJ54AHC08J	Samples
5962-9682001QDA	ACTIVE	CFP	W	14	25	Non-RoHS & Green	SNPB	N / A for Pkg Type	-55 to 125	5962-9682001QD A SNJ54AHC08W	Samples
SN74AHC14BQAR	ACTIVE	WQFN	BQA	14	3000	RoHS & Green	NIPDAU	Level-1-260C-UNLIM	-40 to 125	AHC14	Samples
SN74AHC14D	OBSOLETE	SOIC	D	14		TBD	Call TI	Call TI	-40 to 125	AHC14	
SN74AHC14DBR	ACTIVE	SSOP	DB	14	2000	RoHS & Green	NIPDAU	Level-1-260C-UNLIM	-40 to 125	HA14	Samples
SN74AHC14DGVR	ACTIVE	TVSOP	DGV	14	2000	RoHS & Green	NIPDAU	Level-1-260C-UNLIM	-40 to 125	HA14	Samples
SN74AHC14DR	ACTIVE	SOIC	D	14	2500	RoHS & Green	NIPDAU	Level-1-260C-UNLIM	-40 to 125	AHC14	Samples
SN74AHC14DRE4	ACTIVE	SOIC	D	14	2500	RoHS & Green	NIPDAU	Level-1-260C-UNLIM	-40 to 125	AHC14	Samples
SN74AHC14DRG3	ACTIVE	SOIC	D	14	2500	RoHS & Green	SN	Level-1-260C-UNLIM	-40 to 125	AHC14	Samples
SN74AHC14DRG4	ACTIVE	SOIC	D	14	2500	RoHS & Green	NIPDAU	Level-1-260C-UNLIM	-40 to 125	AHC14	Samples
SN74AHC14N	ACTIVE	PDIP	N	14	25	RoHS & Green	NIPDAU	N / A for Pkg Type	-40 to 125	SN74AHC14N	Samples
SN74AHC14NSR	ACTIVE	SO	NS	14	2000	RoHS & Green	NIPDAU	Level-1-260C-UNLIM	-40 to 125	AHC14	Samples
SN74AHC14PW	OBSOLETE	TSSOP	PW	14		TBD	Call TI	Call TI	-40 to 125	HA14	

Orderable Device	Status (1)	Package Type	Package Drawing	Pins	Package Qty	Eco Plan (2)	Lead finish/ Ball material (6)	MSL Peak Temp (3)	Op Temp (°C)	Device Marking (4/5)	Samples
SN74AHC14PWR	ACTIVE	TSSOP	PW	14	2000	RoHS & Green	NIPDAU | SN	Level-1-260C-UNLIM	-40 to 125	HA14	Samples
SN74AHC14PWRG3	ACTIVE	TSSOP	PW	14	2000	RoHS & Green	SN	Level-1-260C-UNLIM	-40 to 125	HA14	Samples
SN74AHC14PWRG4	ACTIVE	TSSOP	PW	14	2000	RoHS & Green	NIPDAU	Level-1-260C-UNLIM	-40 to 125	HA14	Samples
SN74AHC14RGYR	ACTIVE	VQFN	RGY	14	3000	RoHS & Green	NIPDAU	Level-1-260C-UNLIM	-40 to 125	HA14	Samples
SNJ54AHC08J	ACTIVE	CDIP	J	14	25	Non-RoHS & Green	SNPB	N / A for Pkg Type	-55 to 125	5962-9682001QC A SNJ54AHC08J	Samples
SNJ54AHC08W	ACTIVE	CFP	W	14	25	Non-RoHS & Green	SNPB	N / A for Pkg Type	-55 to 125	5962-9682001QD A SNJ54AHC08W	Samples
SNJ54AHC14FK	ACTIVE	LCCC	FK	20	55	Non-RoHS & Green	SNPB	N / A for Pkg Type	-55 to 125	5962-9680201Q2A SNJ54AHC 14FK	Samples
SNJ54AHC14J	ACTIVE	CDIP	J	14	25	Non-RoHS & Green	SNPB	N / A for Pkg Type	-55 to 125	5962-9680201QC A SNJ54AHC14J	Samples
SNJ54AHC14W	ACTIVE	CFP	W	14	25	Non-RoHS & Green	SNPB	N / A for Pkg Type	-55 to 125	5962-9680201QD A SNJ54AHC14W	Samples

(1) The marketing status values are defined as follows:
ACTIVE: Product device recommended for new designs.
LIFEBUY: TI has announced that the device will be discontinued, and a lifetime-buy period is in effect.
NRND: Not recommended for new designs. Device is in production to support existing customers, but TI does not recommend using this part in a new design.
PREVIEW: Device has been announced but is not in production. Samples may or may not be available.
OBSOLETE: TI has discontinued the production of the device.

(2) **RoHS:** TI defines "RoHS" to mean semiconductor products that are compliant with the current EU RoHS requirements for all 10 RoHS substances, including the requirement that RoHS substance do not exceed 0.1% by weight in homogeneous materials. Where designed to be soldered at high temperatures, "RoHS" products are suitable for use in specified lead-free processes. TI may reference these types of products as "Pb-Free".
RoHS Exempt: TI defines "RoHS Exempt" to mean products that contain lead but are compliant with EU RoHS pursuant to a specific EU RoHS exemption.
Green: TI defines "Green" to mean the content of Chlorine (Cl) and Bromine (Br) based flame retardants meet JS709B low halogen requirements of <=1000ppm threshold. Antimony trioxide based flame retardants must also meet the <=1000ppm threshold requirement.

(3) MSL, Peak Temp. - The Moisture Sensitivity Level rating according to the JEDEC industry standard classifications, and peak solder temperature.

(4) There may be additional marking, which relates to the logo, the lot trace code information, or the environmental category on the device.

(5) Multiple Device Markings will be inside parentheses. Only one Device Marking contained in parentheses and separated by a "~" will appear on a device. If a line is indented then it is a continuation of the previous line and the two combined represent the entire Device Marking for that device.

(6) Lead finish/Ball material - Orderable Devices may have multiple material finish options. Finish options are separated by a vertical ruled line. Lead finish/Ball material values may wrap to two lines if the finish value exceeds the maximum column width.

Important Information and Disclaimer: The information provided on this page represents TI's knowledge and belief as of the date that it is provided. TI bases its knowledge and belief on information provided by third parties, and makes no representation or warranty as to the accuracy of such information. Efforts are underway to better integrate information from third parties. TI has taken and continues to take reasonable steps to provide representative and accurate information but may not have conducted destructive testing or chemical analysis on incoming materials and chemicals. TI and TI suppliers consider certain information to be proprietary, and thus CAS numbers and other limited information may not be available for release.

In no event shall TI's liability arising out of such information exceed the total purchase price of the TI part(s) at issue in this document sold by TI to Customer on an annual basis.

OTHER QUALIFIED VERSIONS OF SN54AHC14, SN74AHC14 :

- Catalog : SN74AHC14
- Enhanced Product : SN74AHC14-EP, SN74AHC14-EP
- Military : SN54AHC14

NOTE: Qualified Version Definitions:

- Catalog - TI's standard catalog product
- Enhanced Product - Supports Defense, Aerospace and Medical Applications
- Military - QML certified for Military and Defense Applications

TAPE AND REEL INFORMATION

REEL DIMENSIONS

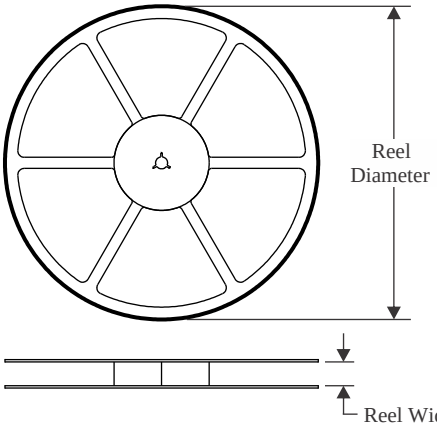

TAPE DIMENSIONS

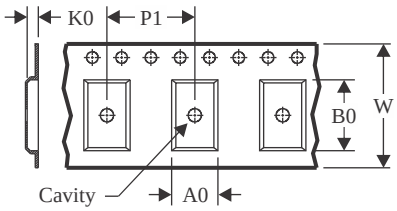

A0	Dimension designed to accommodate the component width
B0	Dimension designed to accommodate the component length
K0	Dimension designed to accommodate the component thickness
W	Overall width of the carrier tape
P1	Pitch between successive cavity centers

QUADRANT ASSIGNMENTS FOR PIN 1 ORIENTATION IN TAPE

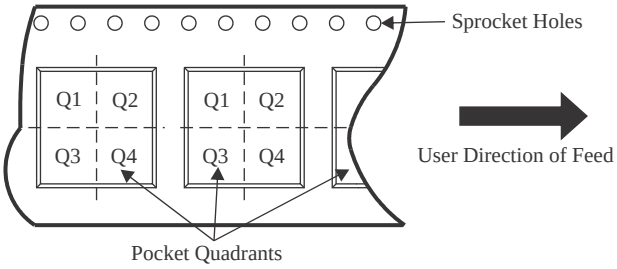

*All dimensions are nominal

Device	Package Type	Package Drawing	Pins	SPQ	Reel Diameter (mm)	Reel Width W1 (mm)	A0 (mm)	B0 (mm)	K0 (mm)	P1 (mm)	W (mm)	Pin1 Quadrant
SN74AHC14BQAR	WQFN	BQA	14	3000	180.0	12.4	2.8	3.3	1.1	4.0	12.0	Q1
SN74AHC14DBR	SSOP	DB	14	2000	330.0	16.4	8.35	6.6	2.4	12.0	16.0	Q1
SN74AHC14DBR	SSOP	DB	14	2000	330.0	16.4	8.35	6.6	2.4	12.0	16.0	Q1
SN74AHC14DGVR	TVSOP	DGV	14	2000	330.0	12.4	6.8	4.0	1.6	8.0	12.0	Q1
SN74AHC14DR	SOIC	D	14	2500	330.0	16.4	6.5	9.0	2.1	8.0	16.0	Q1
SN74AHC14DR	SOIC	D	14	2500	330.0	16.4	6.5	9.0	2.1	8.0	16.0	Q1
SN74AHC14DR	SOIC	D	14	2500	330.0	16.4	6.5	9.0	2.1	8.0	16.0	Q1
SN74AHC14DRG3	SOIC	D	14	2500	330.0	16.8	6.5	9.5	2.1	8.0	16.0	Q1
SN74AHC14DRG4	SOIC	D	14	2500	330.0	16.4	6.5	9.0	2.1	8.0	16.0	Q1
SN74AHC14NSR	SO	NS	14	2000	330.0	16.4	8.2	10.5	2.5	12.0	16.0	Q1
SN74AHC14PWR	TSSOP	PW	14	2000	330.0	12.4	6.9	5.6	1.6	8.0	12.0	Q1
SN74AHC14PWR	TSSOP	PW	14	2000	330.0	12.4	6.9	5.6	1.6	8.0	12.0	Q1
SN74AHC14PWR	TSSOP	PW	14	2000	330.0	12.4	6.85	5.45	1.6	8.0	12.0	Q1
SN74AHC14PWRG3	TSSOP	PW	14	2000	330.0	12.4	6.9	5.6	1.6	8.0	12.0	Q1
SN74AHC14PWRG4	TSSOP	PW	14	2000	330.0	12.4	6.9	5.6	1.6	8.0	12.0	Q1
SN74AHC14PWRG4	TSSOP	PW	14	2000	330.0	12.4	6.9	5.6	1.6	8.0	12.0	Q1

Device	Package Type	Package Drawing	Pins	SPQ	Reel Diameter (mm)	Reel Width W1 (mm)	A0 (mm)	B0 (mm)	K0 (mm)	P1 (mm)	W (mm)	Pin1 Quadrant
SN74AHC14RGYR	VQFN	RGY	14	3000	330.0	12.4	3.75	3.75	1.15	8.0	12.0	Q1

TAPE AND REEL BOX DIMENSIONS

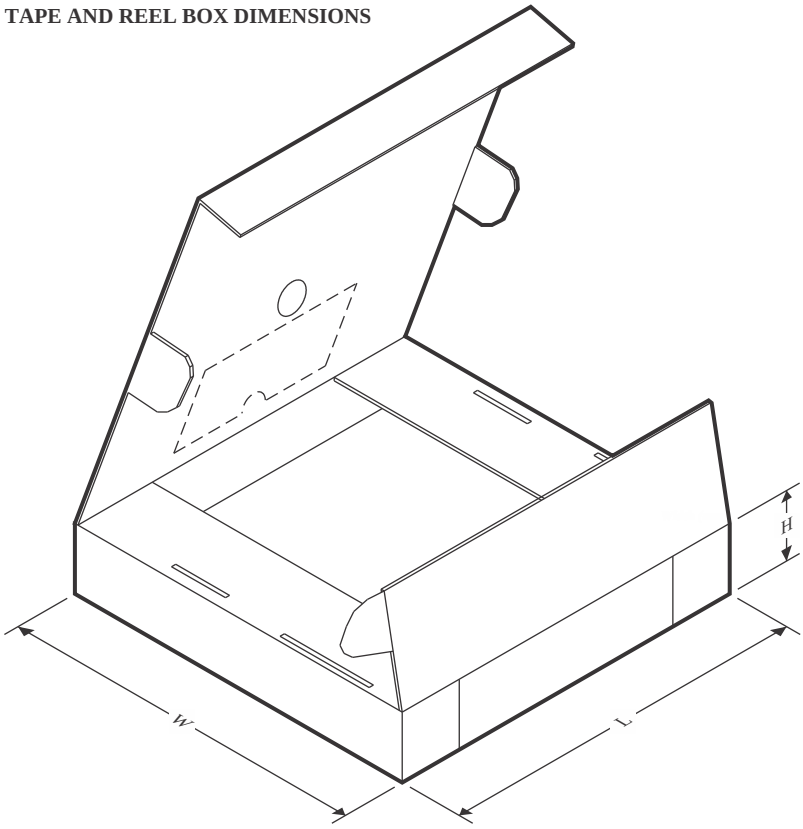

*All dimensions are nominal

Device	Package Type	Package Drawing	Pins	SPQ	Length (mm)	Width (mm)	Height (mm)
SN74AHC14BQAR	WQFN	BQA	14	3000	210.0	185.0	35.0
SN74AHC14DBR	SSOP	DB	14	2000	353.0	353.0	32.0
SN74AHC14DBR	SSOP	DB	14	2000	356.0	356.0	35.0
SN74AHC14DGVR	TVSOP	DGV	14	2000	356.0	356.0	35.0
SN74AHC14DR	SOIC	D	14	2500	356.0	356.0	35.0
SN74AHC14DR	SOIC	D	14	2500	353.0	353.0	32.0
SN74AHC14DR	SOIC	D	14	2500	353.0	353.0	32.0
SN74AHC14DRG3	SOIC	D	14	2500	364.0	364.0	27.0
SN74AHC14DRG4	SOIC	D	14	2500	353.0	353.0	32.0
SN74AHC14NSR	SO	NS	14	2000	356.0	356.0	35.0
SN74AHC14PWR	TSSOP	PW	14	2000	356.0	356.0	35.0
SN74AHC14PWR	TSSOP	PW	14	2000	353.0	353.0	32.0
SN74AHC14PWR	TSSOP	PW	14	2000	366.0	364.0	50.0
SN74AHC14PWRG3	TSSOP	PW	14	2000	364.0	364.0	27.0
SN74AHC14PWRG4	TSSOP	PW	14	2000	353.0	353.0	32.0
SN74AHC14PWRG4	TSSOP	PW	14	2000	356.0	356.0	35.0
SN74AHC14RGYR	VQFN	RGY	14	3000	360.0	360.0	36.0

TUBE

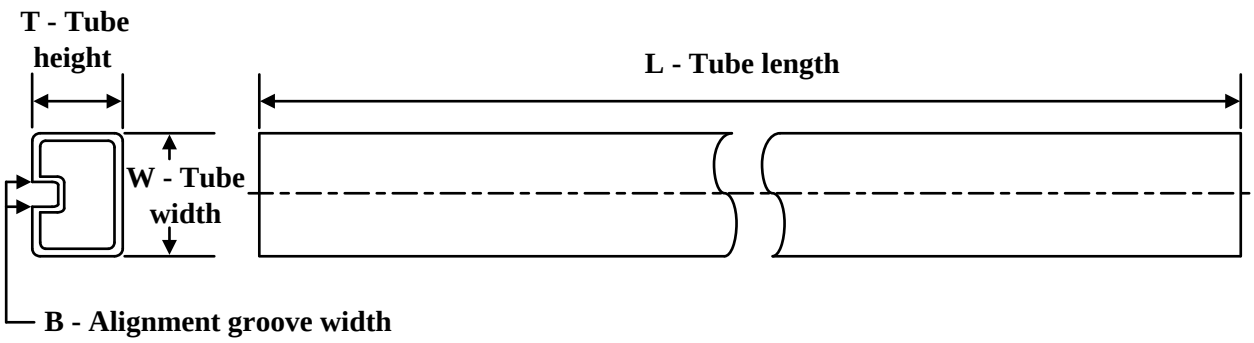

*All dimensions are nominal

Device	Package Name	Package Type	Pins	SPQ	L (mm)	W (mm)	T (µm)	B (mm)
5962-9680201Q2A	FK	LCCC	20	55	506.98	12.06	2030	NA
5962-9680201QDA	W	CFP	14	25	506.98	26.16	6220	NA
5962-9682001QDA	W	CFP	14	25	506.98	26.16	6220	NA
SN74AHC14N	N	PDIP	14	25	506	13.97	11230	4.32
SN74AHC14N	N	PDIP	14	25	506	13.97	11230	4.32
SNJ54AHC08W	W	CFP	14	25	506.98	26.16	6220	NA
SNJ54AHC14FK	FK	LCCC	20	55	506.98	12.06	2030	NA
SNJ54AHC14W	W	CFP	14	25	506.98	26.16	6220	NA

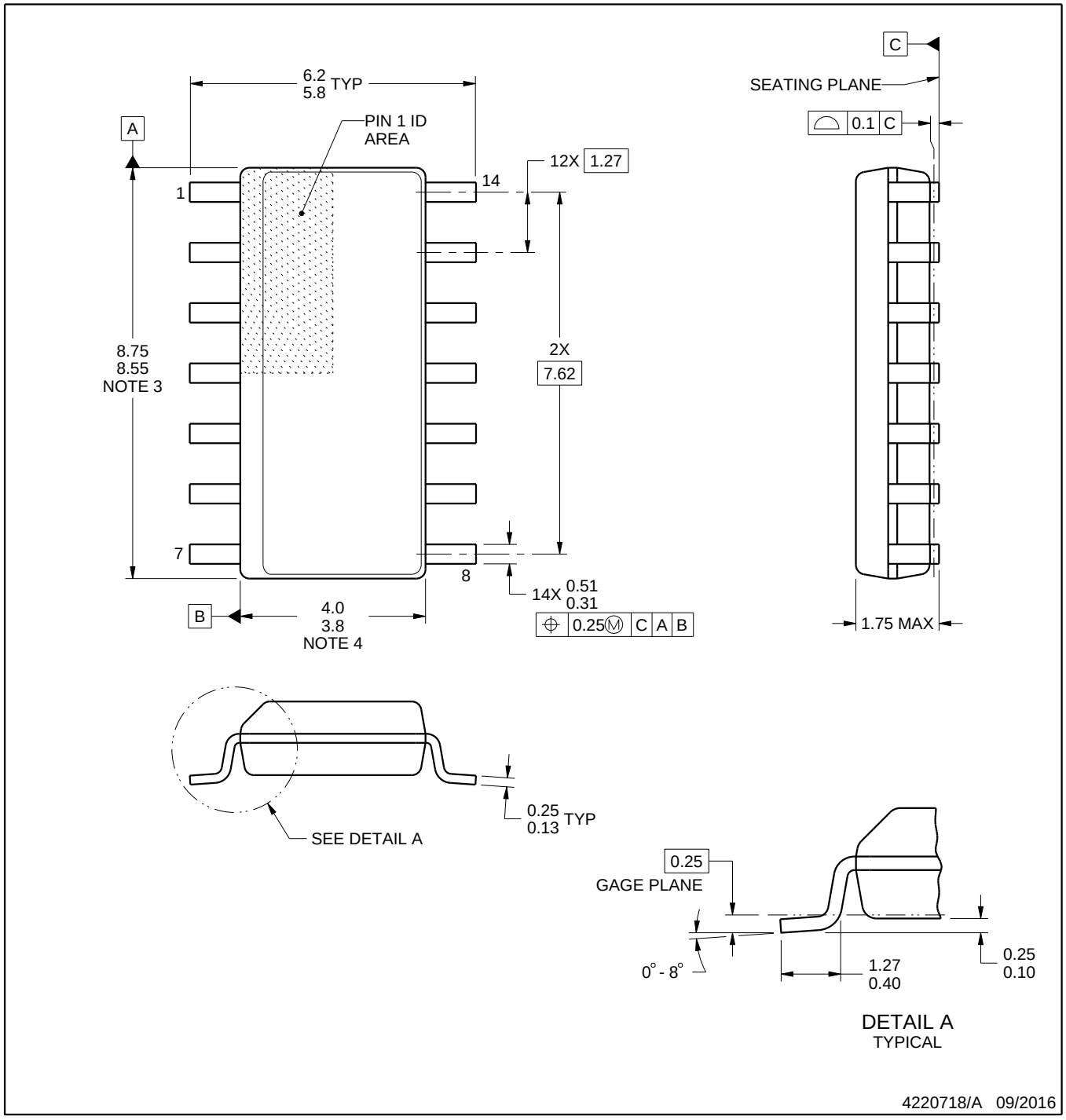

NOTES:

1. All linear dimensions are in millimeters. Dimensions in parenthesis are for reference only. Dimensioning and tolerancing per ASME Y14.5M.
2. This drawing is subject to change without notice.
3. This dimension does not include mold flash, protrusions, or gate burrs. Mold flash, protrusions, or gate burrs shall not exceed 0.15 mm, per side.
4. This dimension does not include interlead flash. Interlead flash shall not exceed 0.43 mm, per side.
5. Reference JEDEC registration MS-012, variation AB.

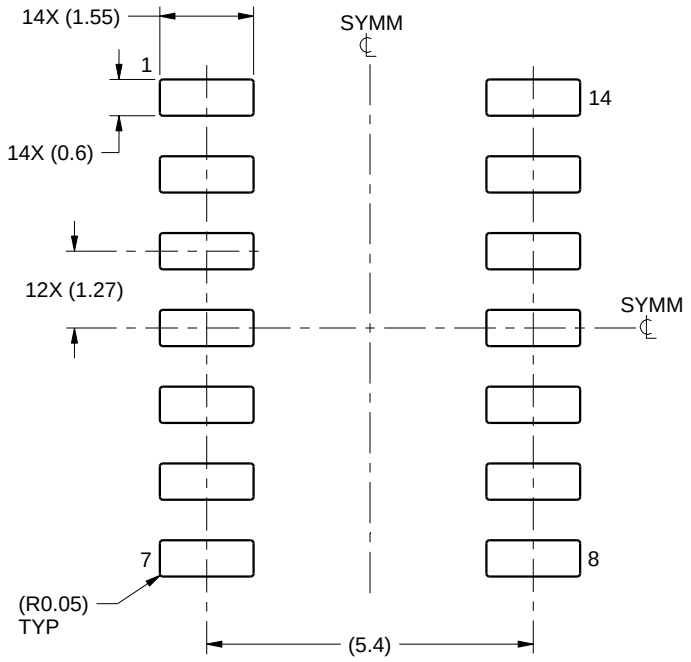

LAND PATTERN EXAMPLE
SCALE:8X

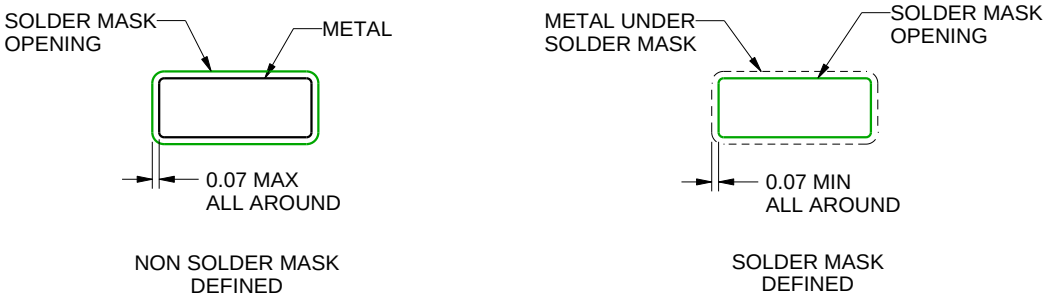

SOLDER MASK DETAILS

4220718/A 09/2016

NOTES: (continued)

6. Publication IPC-7351 may have alternate designs.
7. Solder mask tolerances between and around signal pads can vary based on board fabrication site.

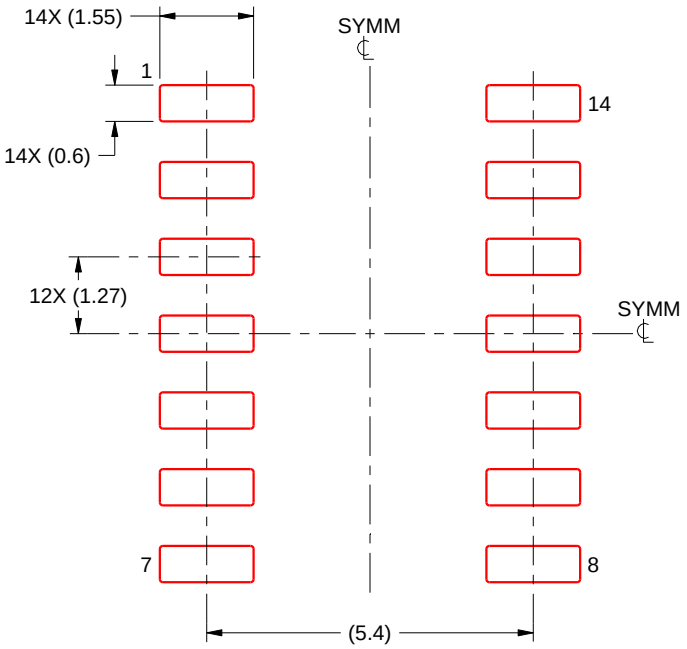

SOLDER PASTE EXAMPLE
BASED ON 0.125 mm THICK STENCIL
SCALE:8X

4220718/A 09/2016

NOTES: (continued)

8. Laser cutting apertures with trapezoidal walls and rounded corners may offer better paste release. IPC-7525 may have alternate design recommendations.
9. Board assembly site may have different recommendations for stencil design.

RGY (S-PVQFN-N14) PLASTIC QUAD FLATPACK NO-LEAD

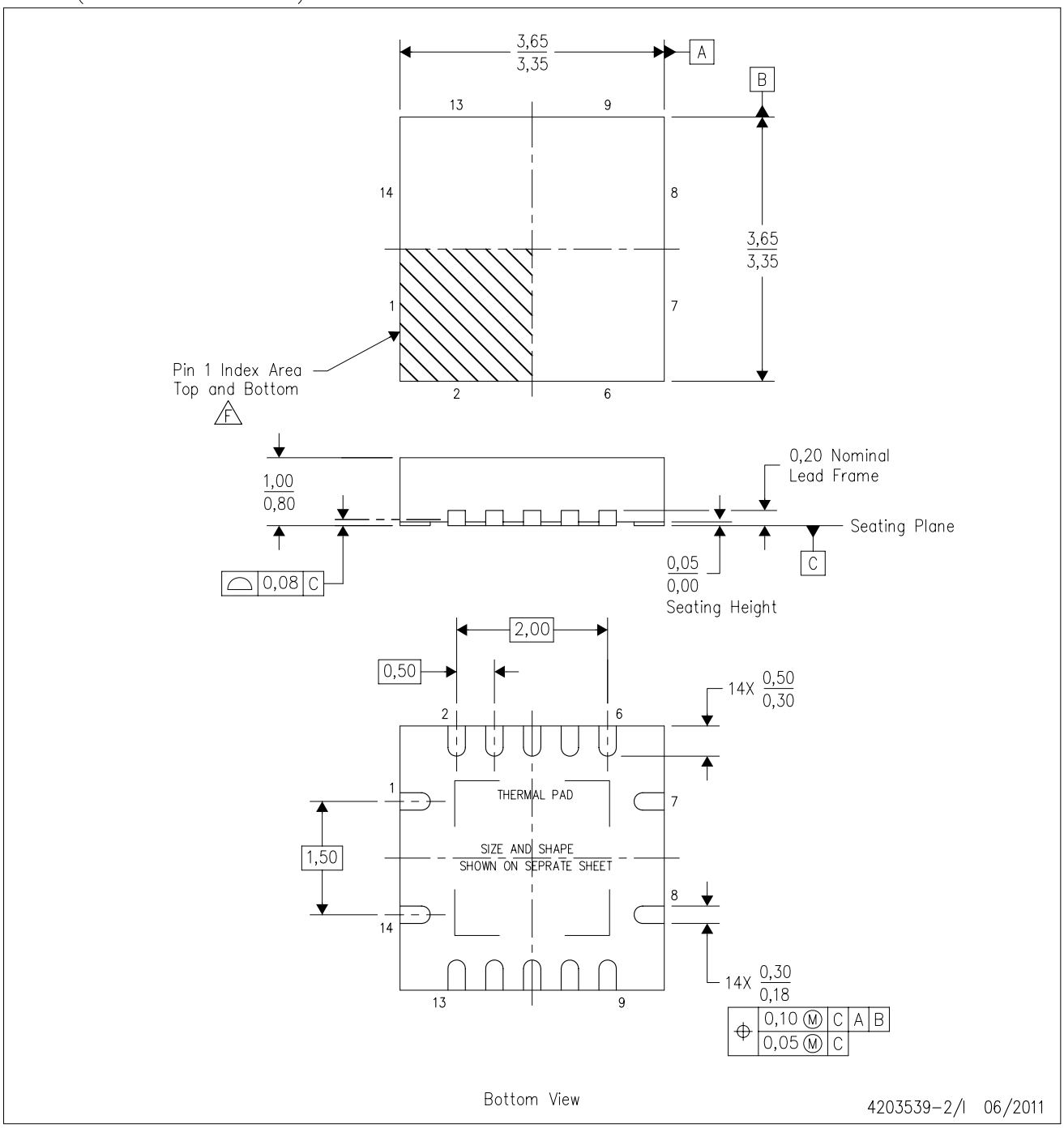

NOTES:
- A. All linear dimensions are in millimeters. Dimensioning and tolerancing per ASME Y14.5M-1994.
- B. This drawing is subject to change without notice.
- C. QFN (Quad Flatpack No-Lead) package configuration.
- D. The package thermal pad must be soldered to the board for thermal and mechanical performance.
- E. See the additional figure in the Product Data Sheet for details regarding the exposed thermal pad features and dimensions.
- F. Pin 1 identifiers are located on both top and bottom of the package and within the zone indicated. The Pin 1 identifiers are either a molded, marked, or metal feature.
- G. Package complies to JEDEC MO-241 variation BA.

GENERIC PACKAGE VIEW

BQA 14

WQFN - 0.8 mm max height

2.5 x 3, 0.5 mm pitch

PLASTIC QUAD FLATPACK - NO LEAD

This image is a representation of the package family, actual package may vary.
Refer to the product data sheet for package details.

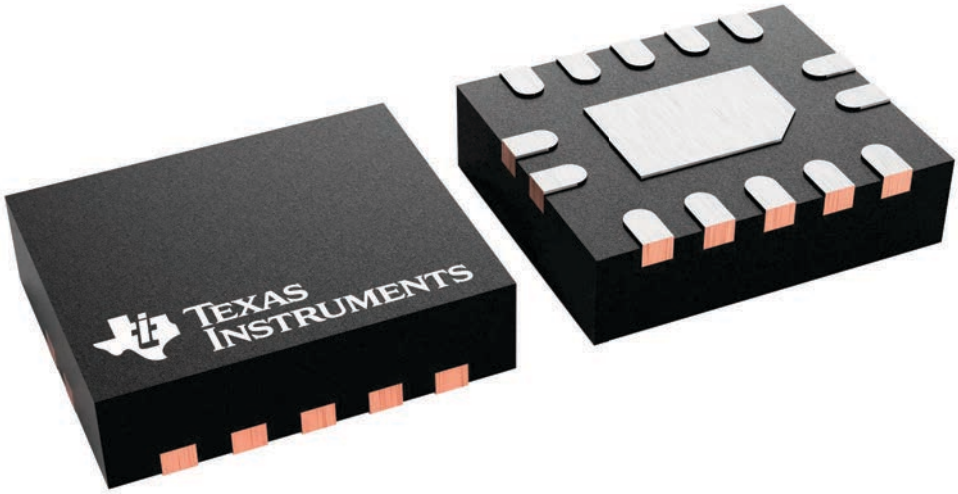

4227145/A

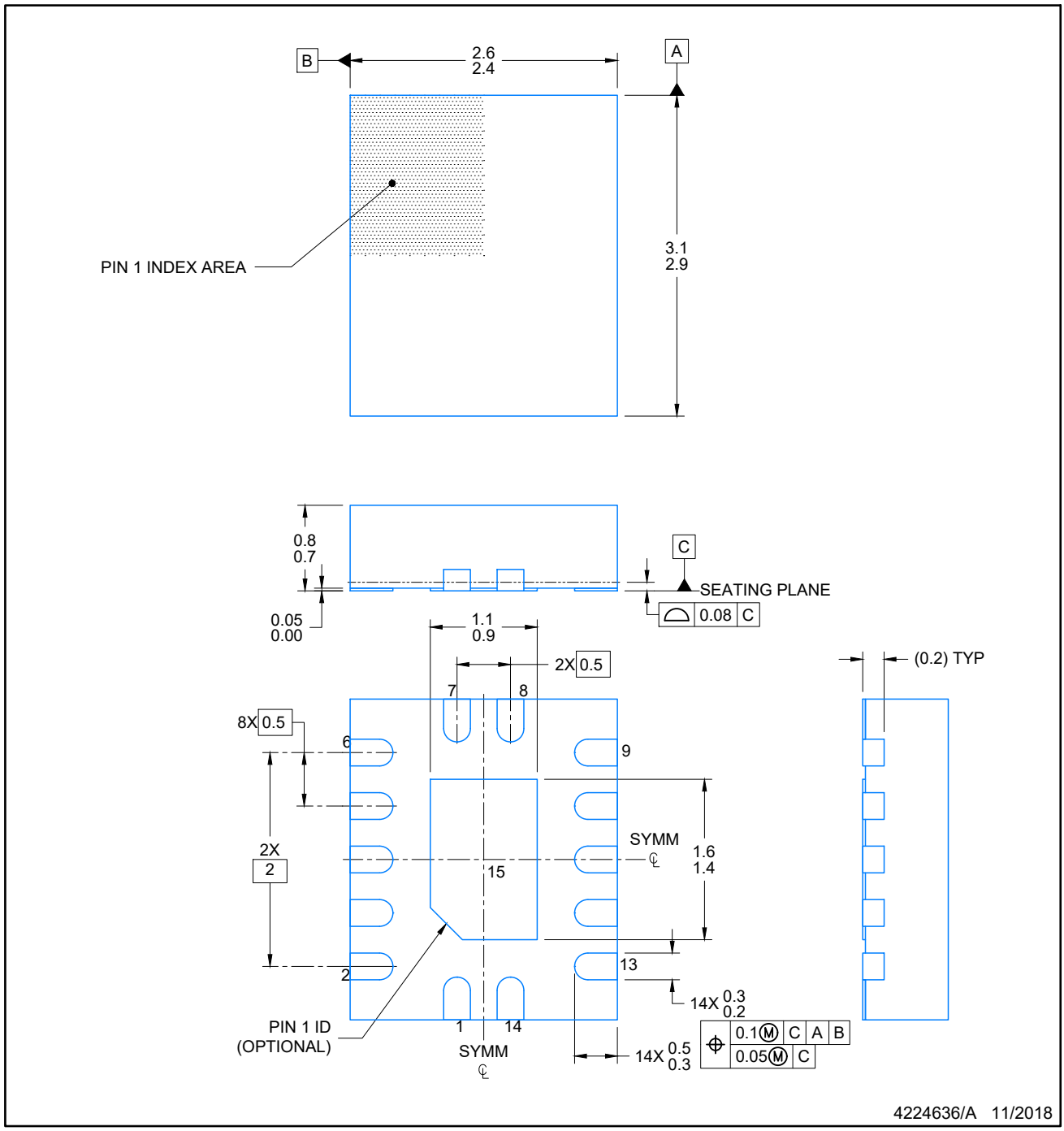

NOTES:

1. All linear dimensions are in millimeters. Any dimensions in parenthesis are for reference only. Dimensioning and tolerancing per ASME Y14.5M.
2. This drawing is subject to change without notice.
3. The package thermal pad must be soldered to the printed circuit board for optimal thermal and mechanical performance.

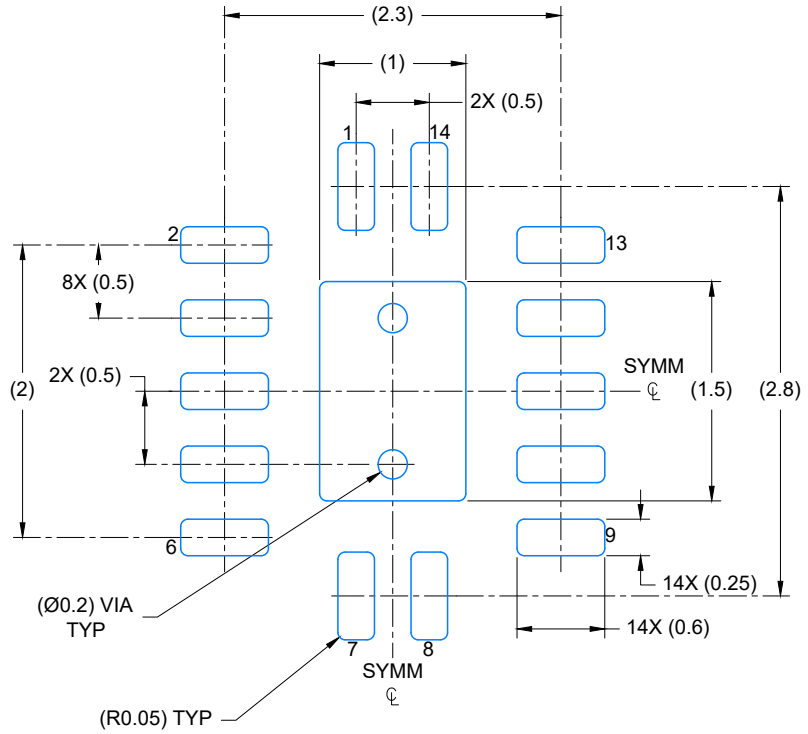

LAND PATTERN EXAMPLE
EXPOSED METAL SHOWN
SCALE: 20X

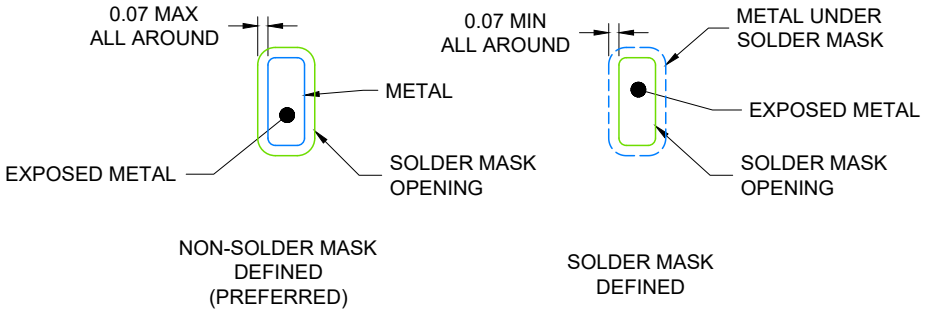

4224636/A 11/2018

NOTES: (continued)

4. This package is designed to be soldered to a thermal pad on the board. For more information, see Texas Instruments literature number SLUA271 (www.ti.com/lit/slua271).
5. Vias are optional depending on application, refer to device data sheet. If any vias are implemented, refer to their locations shown on this view. It is recommended that vias under paste be filled, plugged or tented.

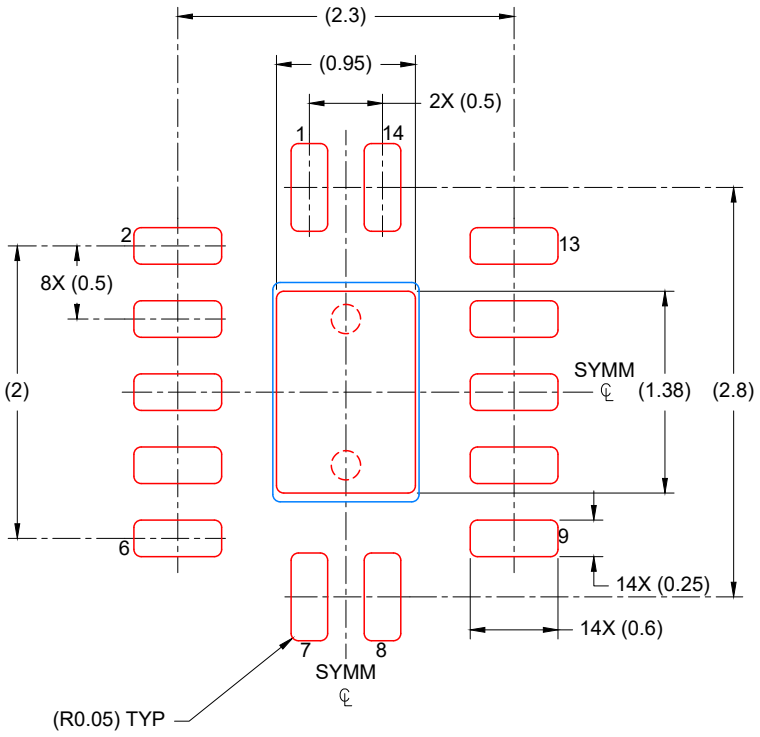

SOLDER PASTE EXAMPLE
BASED ON 0.125 mm THICK STENCIL

EXPOSED PAD
88% PRINTED COVERAGE BY AREA
SCALE: 20X

4224636/A 11/2018

NOTES: (continued)

6. Laser cutting apertures with trapezoidal walls and rounded corners may offer better paste release. IPC-7525 may have alternate design recommendations.

MECHANICAL DATA

NS (R-PDSO-G)** **PLASTIC SMALL-OUTLINE PACKAGE**

14-PINS SHOWN

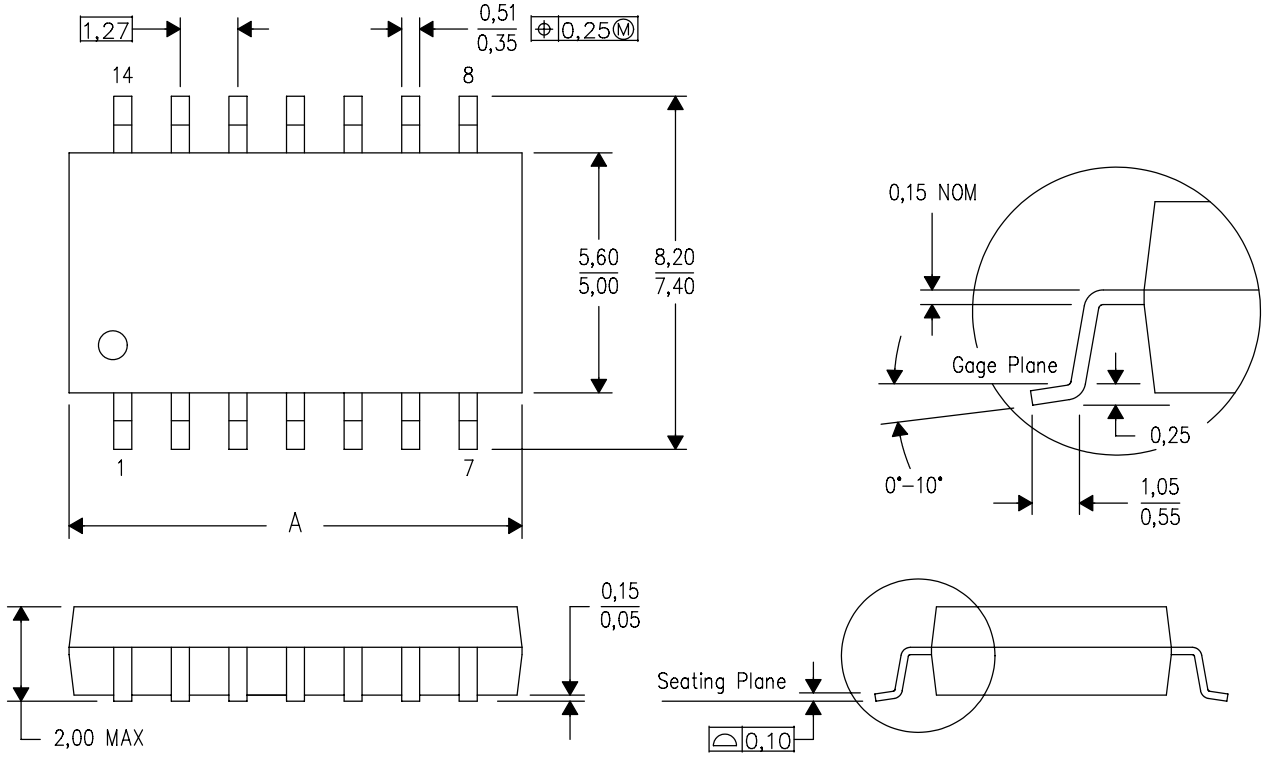

DIM \ PINS **	14	16	20	24
A MAX	10,50	10,50	12,90	15,30
A MIN	9,90	9,90	12,30	14,70

4040062/C 03/03

NOTES:
A. All linear dimensions are in millimeters.
B. This drawing is subject to change without notice.
C. Body dimensions do not include mold flash or protrusion, not to exceed 0,15.

W (R–GDFP–F14) CERAMIC DUAL FLATPACK

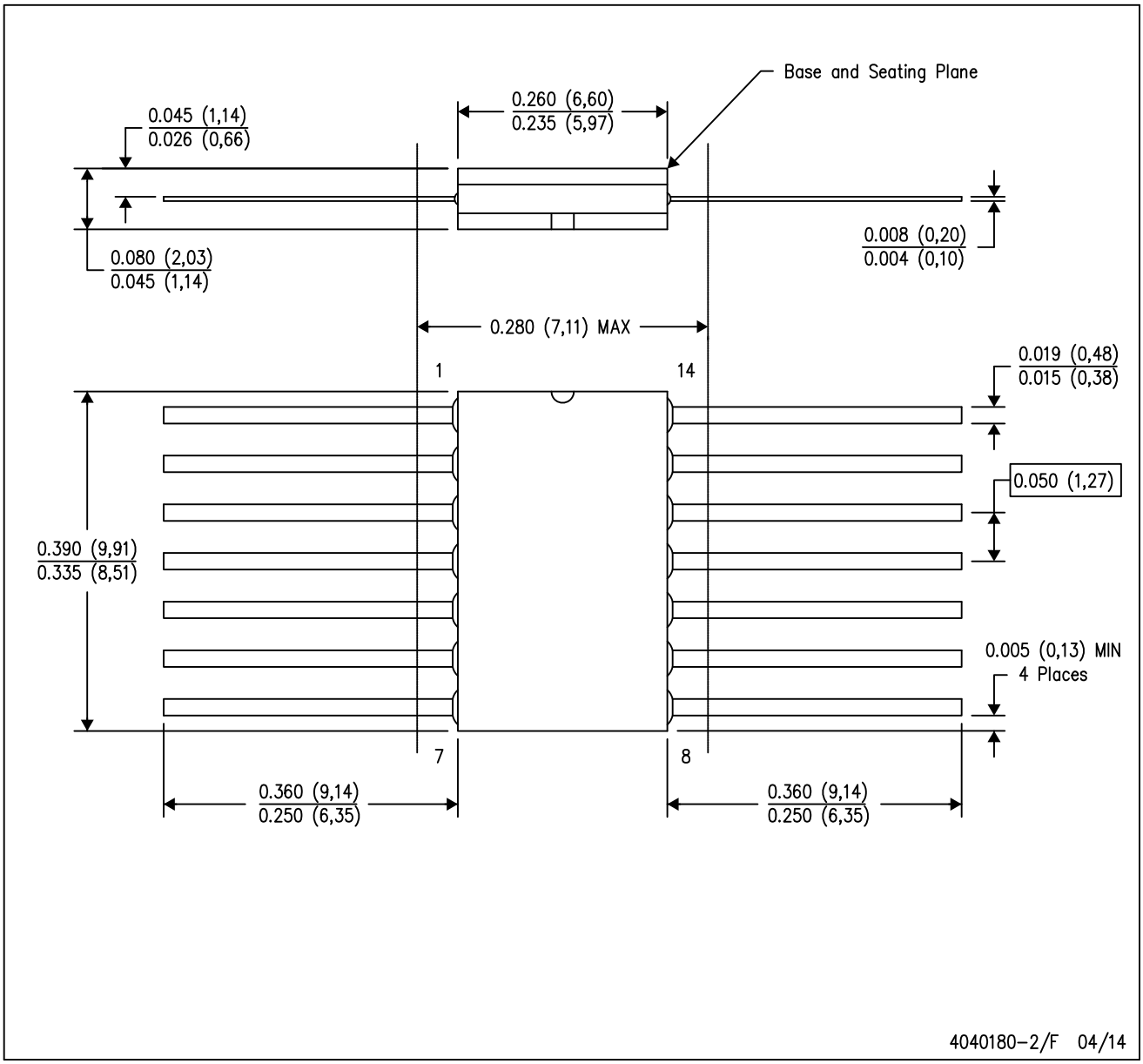

NOTES:
A. All linear dimensions are in inches (millimeters).
B. This drawing is subject to change without notice.
C. This package can be hermetically sealed with a ceramic lid using glass frit.
D. Index point is provided on cap for terminal identification only.
E. Falls within MIL STD 1835 GDFP1–F14

DGV (R-PDSO-G)** **PLASTIC SMALL-OUTLINE**

24 PINS SHOWN

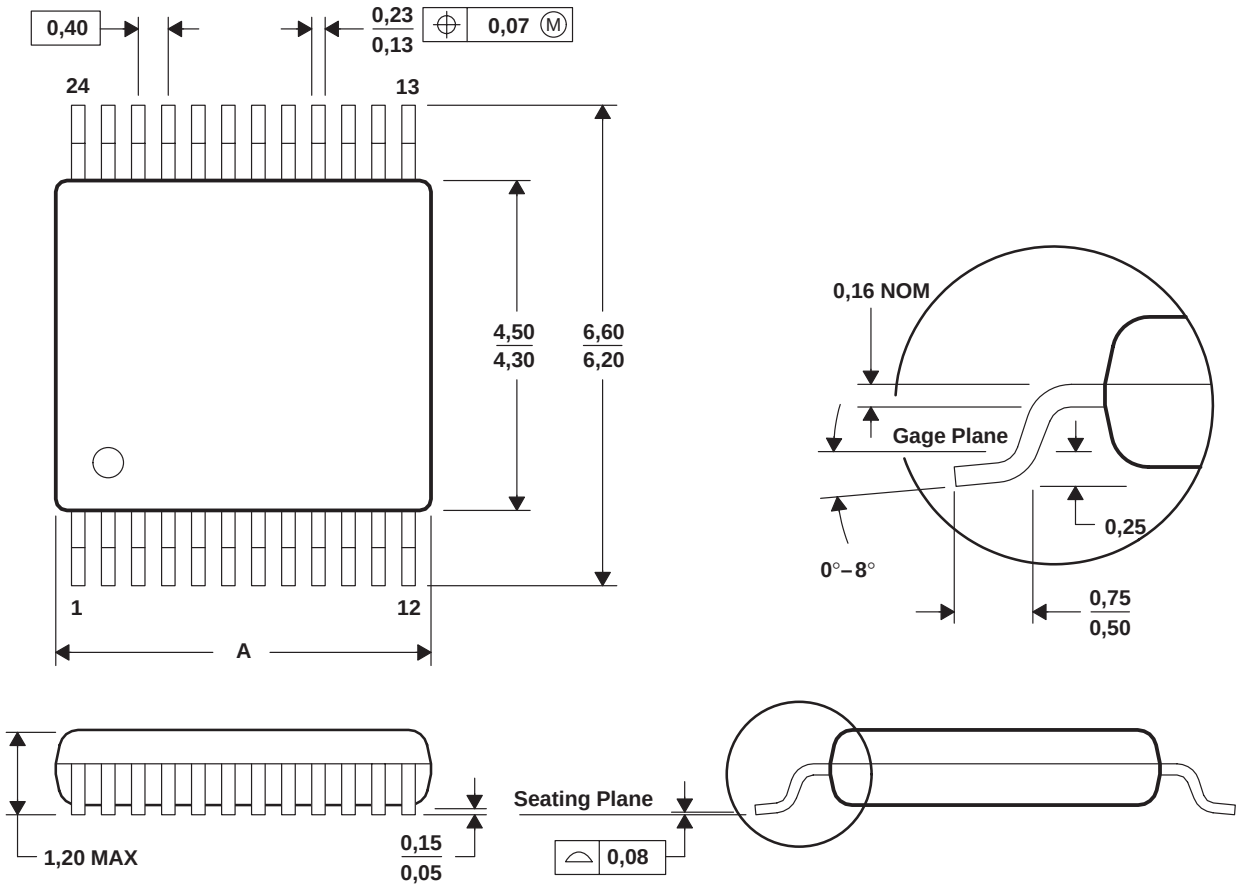

DIM \ PINS **	14	16	20	24	38	48	56
A MAX	3,70	3,70	5,10	5,10	7,90	9,80	11,40
A MIN	3,50	3,50	4,90	4,90	7,70	9,60	11,20

4073251/E 08/00

NOTES: A. All linear dimensions are in millimeters.
B. This drawing is subject to change without notice.
C. Body dimensions do not include mold flash or protrusion, not to exceed 0,15 per side.
D. Falls within JEDEC: 24/48 Pins – MO-153
14/16/20/56 Pins – MO-194

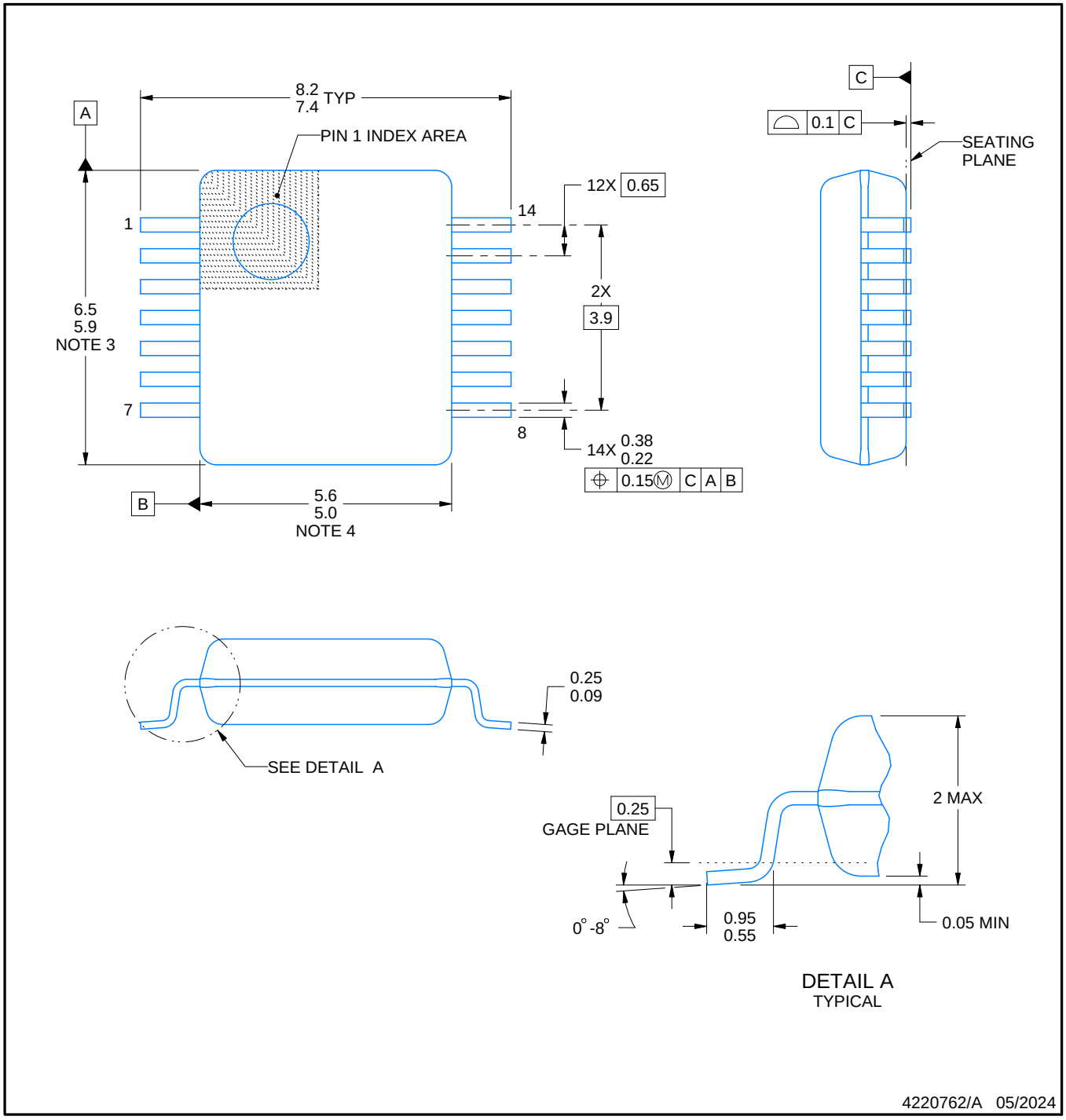

NOTES:

1. All linear dimensions are in millimeters. Any dimensions in parenthesis are for reference only. Dimensioning and tolerancing per ASME Y14.5M.
2. This drawing is subject to change without notice.
3. This dimension does not include mold flash, protrusions, or gate burrs. Mold flash, protrusions, or gate burrs shall not exceed 0.15 mm per side.
4. Reference JEDEC registration MO-150.

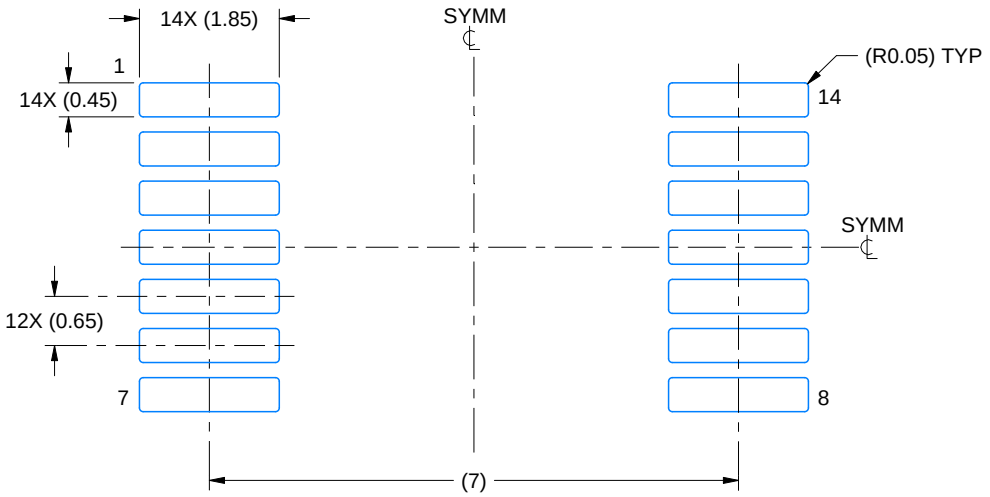

LAND PATTERN EXAMPLE
EXPOSED METAL SHOWN
SCALE: 10X

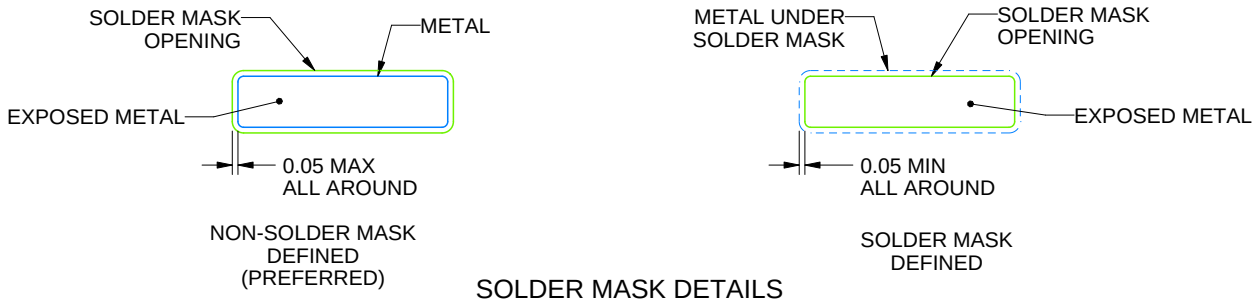

SOLDER MASK DETAILS

4220762/A 05/2024

NOTES: (continued)

5. Publication IPC-7351 may have alternate designs.
6. Solder mask tolerances between and around signal pads can vary based on board fabrication site.

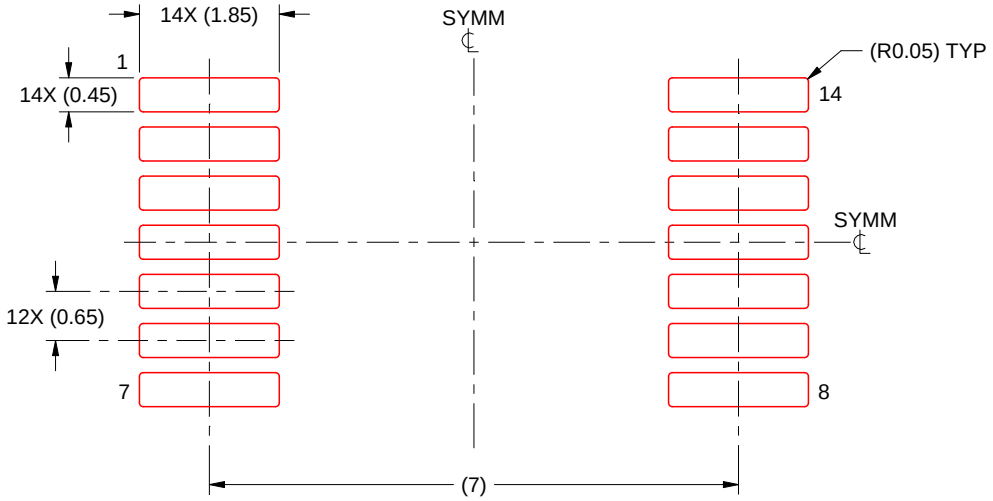

SOLDER PASTE EXAMPLE
BASED ON 0.125 mm THICK STENCIL
SCALE: 10X

4220762/A 05/2024

NOTES: (continued)

7. Laser cutting apertures with trapezoidal walls and rounded corners may offer better paste release. IPC-7525 may have alternate design recommendations.
8. Board assembly site may have different recommendations for stencil design.

GENERIC PACKAGE VIEW

FK 20

LCCC - 2.03 mm max height

8.89 x 8.89, 1.27 mm pitch

LEADLESS CERAMIC CHIP CARRIER

This image is a representation of the package family, actual package may vary.
Refer to the product data sheet for package details.

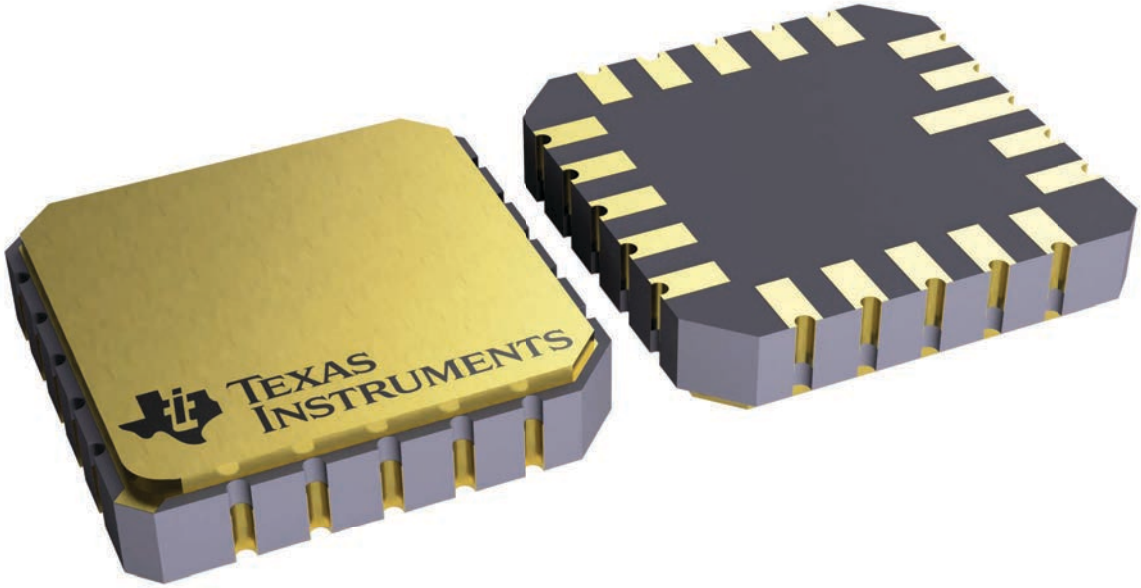

4229370VA\

J 14 CDIP - 5.08 mm max height

CERAMIC DUAL IN LINE PACKAGE

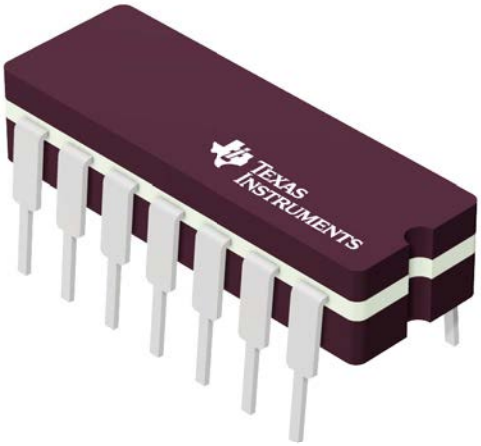

Images above are just a representation of the package family, actual package may vary.
Refer to the product data sheet for package details.

4040083-5/G

PACKAGE OUTLINE

J0014A

CDIP - 5.08 mm max height

CERAMIC DUAL IN LINE PACKAGE

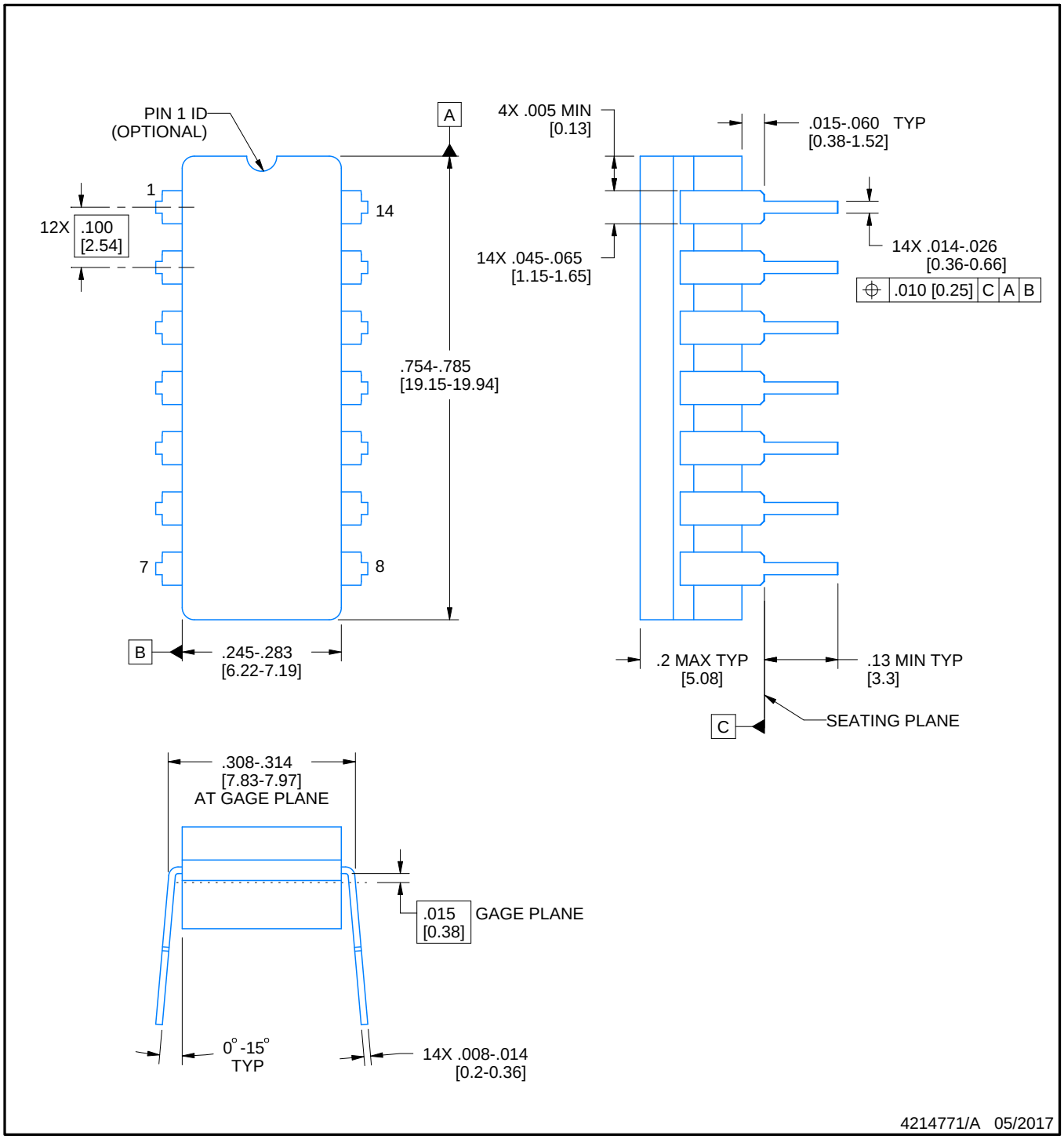

NOTES:

1. All controlling linear dimensions are in inches. Dimensions in brackets are in millimeters. Any dimension in brackets or parenthesis are for reference only. Dimensioning and tolerancing per ASME Y14.5M.
2. This drawing is subject to change without notice.
3. This package is hermitically sealed with a ceramic lid using glass frit.
4. Index point is provided on cap for terminal identification only and on press ceramic glass frit seal only.
5. Falls within MIL-STD-1835 and GDIP1-T14.

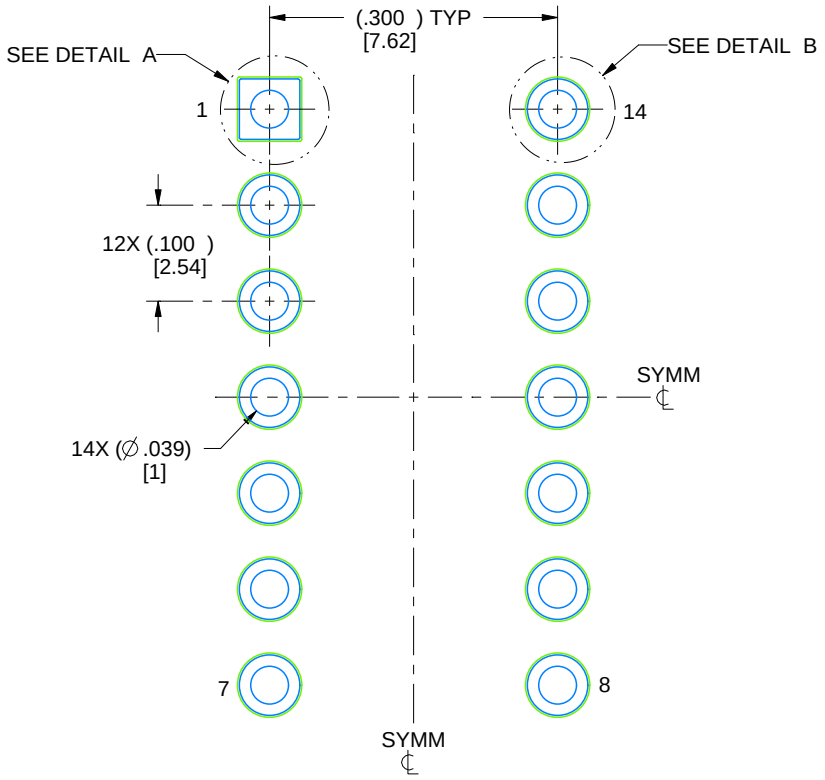

LAND PATTERN EXAMPLE
NON-SOLDER MASK DEFINED
SCALE: 5X

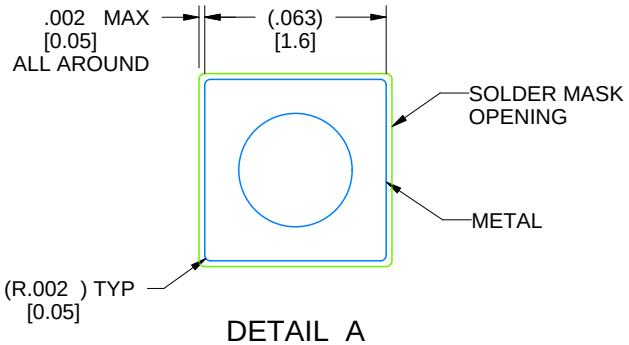

DETAIL A
SCALE: 15X

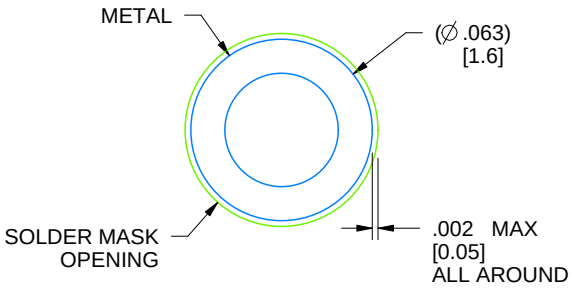

DETAIL B
13X, SCALE: 15X

4214771/A 05/2017

N (R–PDIP–T**) PLASTIC DUAL–IN–LINE PACKAGE

16 PINS SHOWN

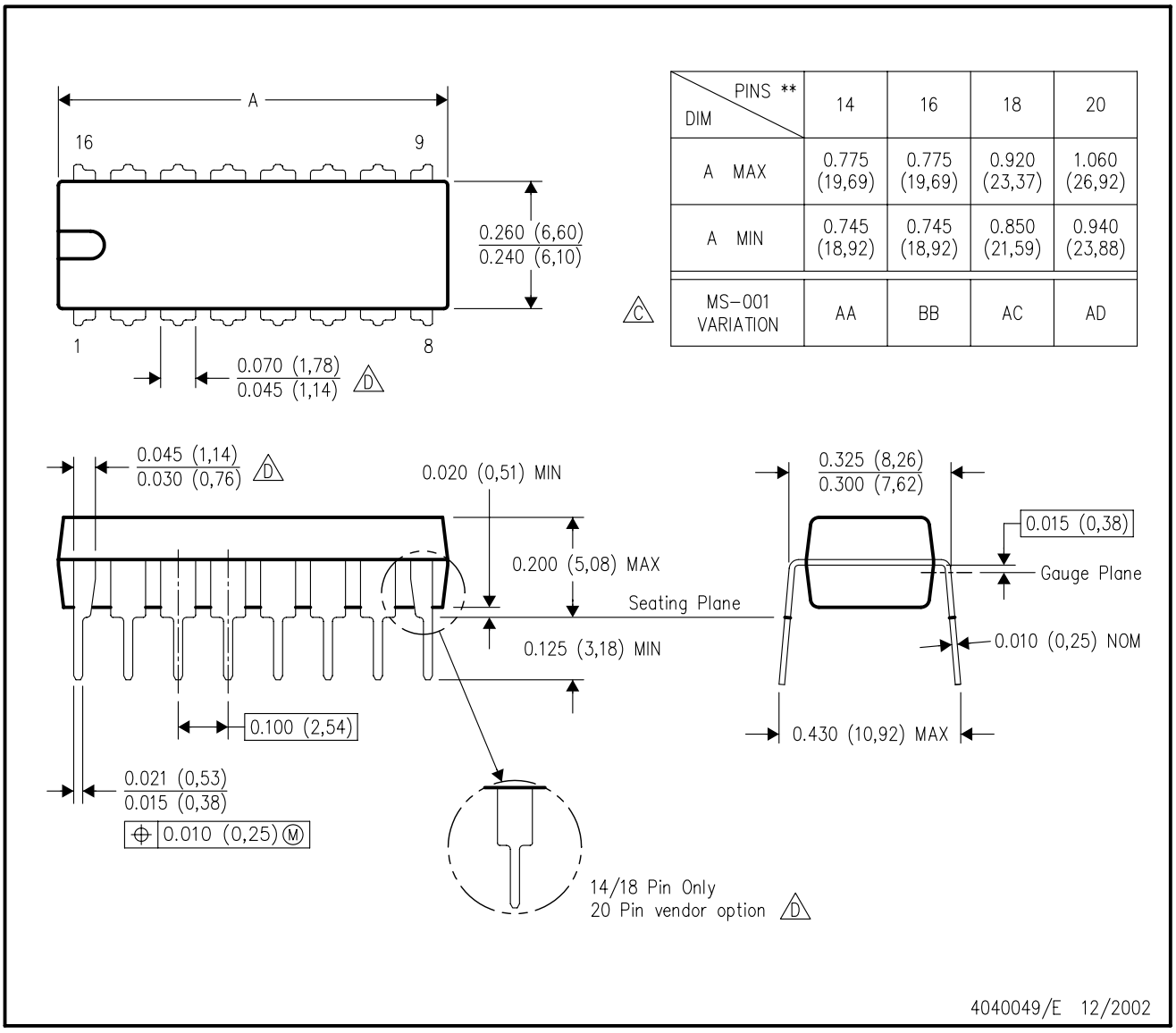

DIM \ PINS **	14	16	18	20
A MAX	0.775 (19,69)	0.775 (19,69)	0.920 (23,37)	1.060 (26,92)
A MIN	0.745 (18,92)	0.745 (18,92)	0.850 (21,59)	0.940 (23,88)
MS–001 VARIATION (C)	AA	BB	AC	AD

NOTES:
A. All linear dimensions are in inches (millimeters).
B. This drawing is subject to change without notice.
C. Falls within JEDEC MS–001, except 18 and 20 pin minimum body length (Dim A).
D. The 20 pin end lead shoulder width is a vendor option, either half or full width.

PW0014A

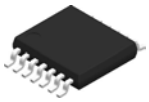

PACKAGE OUTLINE

TSSOP - 1.2 mm max height

SMALL OUTLINE PACKAGE

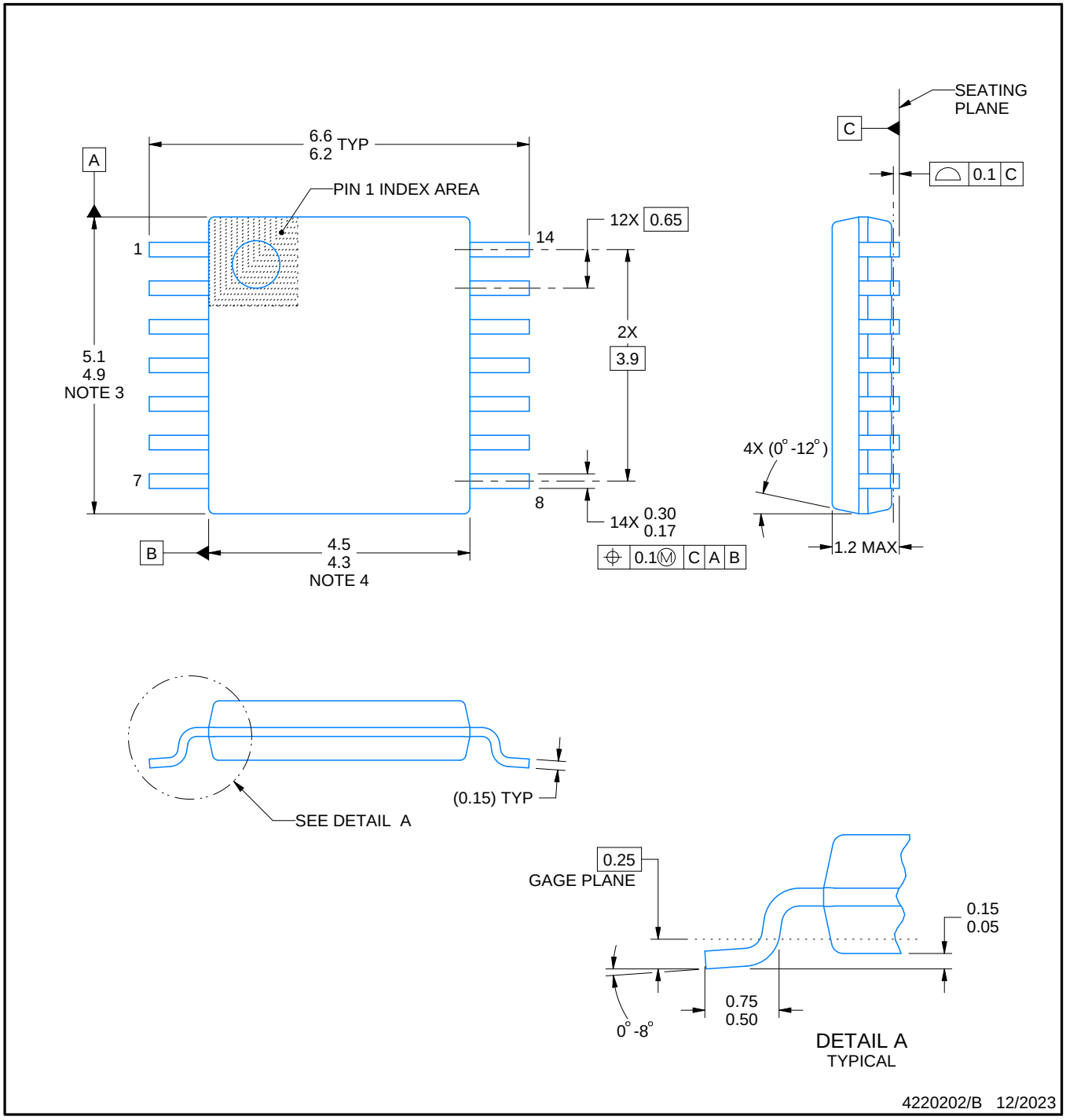

NOTES:

1. All linear dimensions are in millimeters. Any dimensions in parenthesis are for reference only. Dimensioning and tolerancing per ASME Y14.5M.
2. This drawing is subject to change without notice.
3. This dimension does not include mold flash, protrusions, or gate burrs. Mold flash, protrusions, or gate burrs shall not exceed 0.15 mm per side.
4. This dimension does not include interlead flash. Interlead flash shall not exceed 0.25 mm per side.
5. Reference JEDEC registration MO-153.

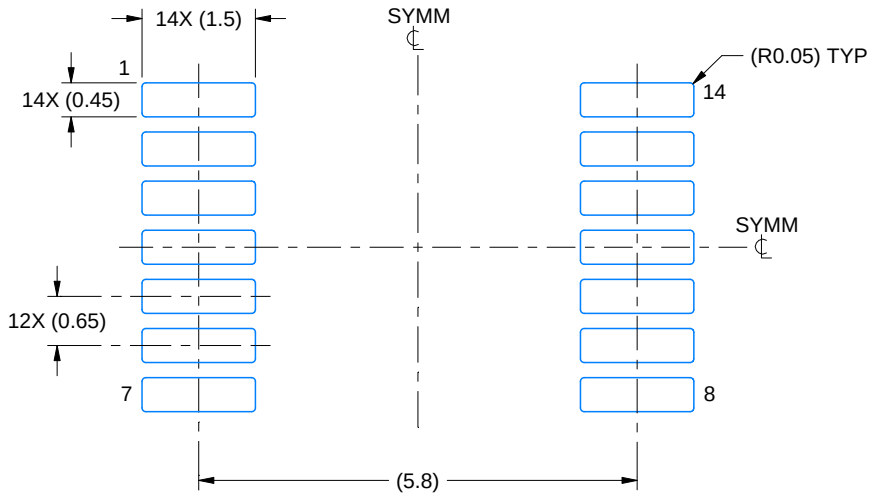

LAND PATTERN EXAMPLE
EXPOSED METAL SHOWN
SCALE: 10X

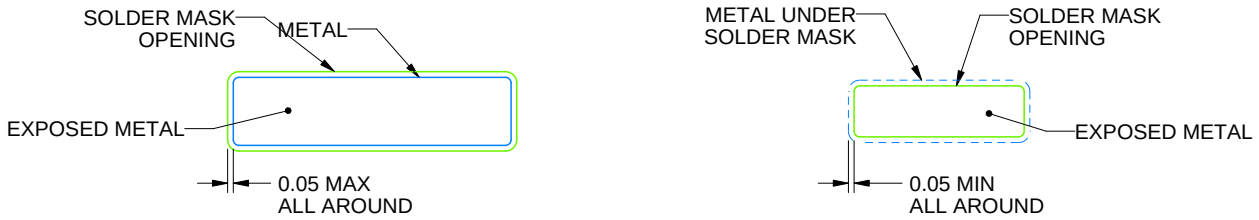

NON-SOLDER MASK DEFINED (PREFERRED)

SOLDER MASK DEFINED

SOLDER MASK DETAILS

4220202/B 12/2023

NOTES: (continued)

6. Publication IPC-7351 may have alternate designs.
7. Solder mask tolerances between and around signal pads can vary based on board fabrication site.

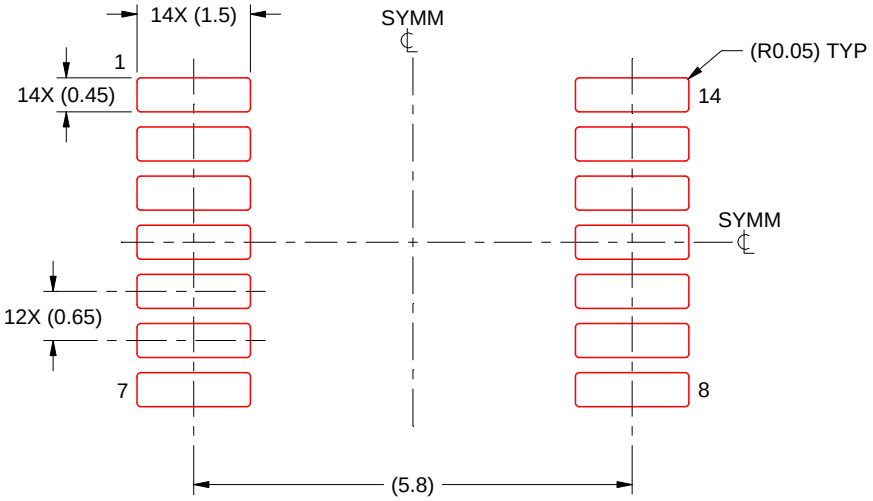

SOLDER PASTE EXAMPLE
BASED ON 0.125 mm THICK STENCIL
SCALE: 10X

4220202/B 12/2023

NOTES: (continued)

8. Laser cutting apertures with trapezoidal walls and rounded corners may offer better paste release. IPC-7525 may have alternate design recommendations.
9. Board assembly site may have different recommendations for stencil design.

重要なお知らせと免責事項

TI は、技術データと信頼性データ (データシートを含みます)、設計リソース (リファレンス・デザインを含みます)、アプリケーションや設計に関する各種アドバイス、Web ツール、安全性情報、その他のリソースを、欠陥が存在する可能性のある「現状のまま」提供しており、商品性および特定目的に対する適合性の黙示保証、第三者の知的財産権の非侵害保証を含むいかなる保証も、明示的または黙示的にかかわらず拒否します。

これらのリソースは、TI 製品を使用する設計の経験を積んだ開発者への提供を意図したものです。(1) お客様のアプリケーションに適した TI 製品の選定、(2) お客様のアプリケーションの設計、検証、試験、(3) お客様のアプリケーションに該当する各種規格や、その他のあらゆる安全性、セキュリティ、規制、または他の要件への確実な適合に関する責任を、お客様のみが単独で負うものとします。

上記の各種リソースは、予告なく変更される可能性があります。これらのリソースは、リソースで説明されている TI 製品を使用するアプリケーションの開発の目的でのみ、TI はその使用をお客様に許諾します。これらのリソースに関して、他の目的で複製することや掲載することは禁止されています。TI や第三者の知的財産権のライセンスが付与されている訳ではありません。お客様は、これらのリソースを自身で使用した結果発生するあらゆる申し立て、損害、費用、損失、責任について、TI およびその代理人を完全に補償するものとし、TI は一切の責任を拒否します。

TI の製品は、TI の販売条件、または ti.com やかかる TI 製品の関連資料などのいずれかを通じて提供する適用可能な条項の下で提供されています。TI がこれらのリソースを提供することは、適用される TI の保証または他の保証の放棄の拡大や変更を意味するものではありません。

お客様がいかなる追加条項または代替条項を提案した場合でも、TI はそれらに異議を唱え、拒否します。

郵送先住所：Texas Instruments, Post Office Box 655303, Dallas, Texas 75265
Copyright © 2024, Texas Instruments Incorporated