SNx4HC175 クリア搭載、クワッド D タイプ・フリップ・フロップ

1 特長

- 幅広い動作電圧範囲:2V～6V
- 出力は最大 10 個の LSTTL 負荷を駆動可能
- 低消費電力、I_{CC}:80μA 以下
- 2 レール出力を備えた 4 つのフリップ・フロップを内蔵
- t_{pd} = 13ns (標準値)
- 5V で ±4mA の出力駆動能力
- 低い入力電流:最大 1μA

2 アプリケーション

- バッファ / ストレージ・レジスタ
- シフト・レジスタ
- パターン・ジェネレータ

3 概要

これらのポジティブ・エッジ・トリガ D タイプ・フリップ・フロップはダイレクト・クリア (CLR) 入力を備えています。'HC175 デバイスは各フリップ・フロップからの相補出力を備えています。

製品情報

部品番号	パッケージ(1)	本体サイズ (公称)
SN54HC175J	CDIP (16)	24.38mm × 6.92mm
SN74HC175D	SOIC (16)	9.90mm × 3.90mm
SN74HC175DBR	SSOP (16)	6.20mm × 5.30mm
SN74HC175N	PDIP (16)	19.31mm × 6.35mm
SN74HC175NSR	SO (16)	6.20mm × 5.30mm
SN74HC175PW	TSSOP (16)	5.00mm × 4.40mm
SNJ54HC175FK	LCCC (20)	8.89mm × 8.45mm
SNJ54HC175W	CFP (16)	10.16mm × 6.73mm

(1) 利用可能なパッケージについては、このデータシートの末尾にある注文情報を参照してください。

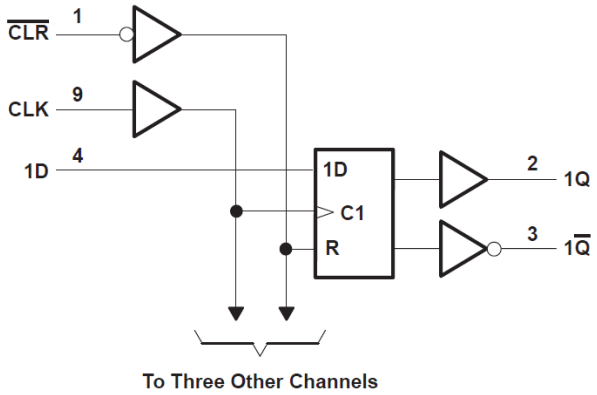

ここに示すピン番号は D、DB、J、N、NS、PW、W の各パッケージのものです。

機能ブロック図

英語版の TI 製品についての情報を翻訳したこの資料は、製品の概要を確認する目的で便宜的に提供しているものです。該当する正式な英語版の最新情報は、www.ti.com で閲覧でき、その内容が常に優先されます。TI では翻訳の正確性および妥当性につきましては一切保証いたしません。実際の設計などの前には、必ず最新版の英語版をご参照くださいますようお願いいたします。

Table of Contents

1 特長 ... 1
2 アプリケーション ... 1
3 概要 ... 1
4 Revision History ... 2
5 Pin Configuration and Functions ... 3
6 Specifications ... 4
6.1 Absolute Maximum Ratings ... 4
6.2 Recommended Operating Conditions[(1)] ... 4
6.3 Thermal Information ... 4
6.4 Electrical Characteristics ... 5
6.5 Timing Requirements ... 5
6.6 Switching Characteristics ... 6
6.7 Operating Characteristics ... 6
7 Parameter Measurement Information ... 7
8 Detailed Description ... 8
8.1 Overview ... 8
8.2 Functional Block Diagram ... 8
8.3 Device Functional Modes ... 8
9 Power Supply Recommendations ... 9
10 Layout ... 9
10.1 Layout Guidelines ... 9
11 Device and Documentation Support ... 10
11.1 Receiving Notification of Documentation Updates ... 10
11.2 サポート・リソース ... 10
11.3 Trademarks ... 10
11.4 Electrostatic Discharge Caution ... 10
11.5 Glossary ... 10
12 Mechanical, Packaging, and Orderable Information ... 10

4 Revision History

資料番号末尾の英字は改訂を表しています。その改訂履歴は英語版に準じています。

Changes from Revision E (February 2022) to Revision F (June 2022)	Page
• Junction-to-ambient thermal resistance values increased. D was 73 is now 117.2, DB was 67 is now 102.7, N was 82 is now 60.5, NS was 64 is now 88.6, PW was 108 is now 137.5	4

Changes from Revision D (September 2003) to Revision E (February 2022)	Page
• 最新のデータシート規格を反映するように、文書全体の表、図、相互参照の採番と書式設定を更新	1

Copyright © 2022 Texas Instruments Incorporated

5 Pin Configuration and Functions

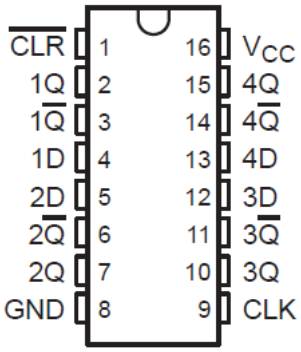

J, W, D, DB, N, NS, or PW Package
16-Pin CDIP, CFP, SOIC, SSOP, PDIP, SO, or TSSOP
Top View

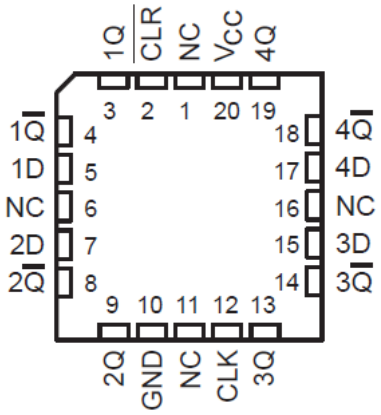

NC - No internal connection

FK Package
20-Pin LCCC
Top View

6 Specifications

6.1 Absolute Maximum Ratings

over operating free-air temperature range (unless otherwise noted)[1]

			MIN	MAX	UNIT
V_{CC}	Supply voltage range		–0.5	7	V
I_{IK}	Input clamp current[2]	$V_I < 0$ or $V_I > V_{CC}$		±20	mA
I_{OK}	Output clamp current[2]	$V_O < 0$ or $V_O > V_{CC}$		±20	mA
I_O	Continuous output current	$V_O = 0$ to V_{CC}		±25	mA
	Continuous current through V_{CC} or GND			±50	mA
T_J	Junction temperature			150	°C
T_{stg}	Storage temperature range		–65	150	°C

(1) Stresses beyond those listed under “absolute maximum ratings” may cause permanent damage to the device. These are stress ratings only, and functional operation of the device at these or any other conditions beyond those indicated under “recommended operating conditions" is not implied. Exposure to absolute-maximum-rated conditions for extended periods may affect device reliability.
(2) The input and output voltage ratings may be exceeded if the input and output current ratings are observed.

6.2 Recommended Operating Conditions[1]

			SN54HC175			SN74HC175			UNIT
			MIN	NOM	MAX	MIN	NOM	MAX	
V_{CC}	Supply voltage		2	5	6	2	5	6	V
V_{IH}	High-level input voltage	V_{CC} = 2 V	1.5			1.5			V
		V_{CC} = 4.5 V	3.15			3.15			
		V_{CC} = 6 V	4.2			4.2			
V_{IL}	Low-level input voltage	V_{CC} = 2 V			0.5			0.5	V
		V_{CC} = 4.5 V			1.35			1.35	
		V_{CC} = 6 V			1.8			1.8	
V_I	Input voltage		0		V_{CC}	0		V_{CC}	V
V_O	Output voltage		0		V_{CC}	0		V_{CC}	V
t_t	Input transition rise/fall time	V_{CC} = 2 V			1000			1000	ns
		V_{CC} = 4.5 V			500			500	
		V_{CC} = 6 V			400			400	
T_A	Operating free-air temperature		−55		125	−40		85	°C

(1) All unused inputs of the device must be held at V_{CC} or GND to ensure proper device operation. Refer to the TI application report, *Implications of Slow or Floating CMOS Inputs*, literature number SCBA004.

6.3 Thermal Information

THERMAL METRIC		D (SOIC) 16 PINS	DB (SSOP) 16 PINS	N (PDIP) 16 PINS	NS (SO) 16 PINS	PW (TSSOP) 16 PINS	UNIT
$R_{\theta JA}$	Junction-to-ambient thermal resistance[1]	117.2	102.7	60.5	88.6	137.5	°C/W
$R_{\theta JC(top)}$	Junction-to-case (top) thermal resistance	77.2	48.6	48	46.2	75.3	°C/W
$R_{\theta JB}$	Junction-to-board thermal resistance	75.6	54.4	40.5	50.8	82.2	°C/W
ψ_{JT}	Junction-to-top characterization parameter	38.1	11.6	27.4	13.4	25.1	°C/W
ψ_{JB}	Junction-to-board characterization parameter	75.3	53.6	40.3	50.4	81.8	°C/W

Copyright © 2022 Texas Instruments Incorporated

6.3 Thermal Information (continued)

THERMAL METRIC		D (SOIC) 16 PINS	DB (SSOP) 16 PINS	N (PDIP) 16 PINS	NS (SO) 16 PINS	PW (TSSOP) 16 PINS	UNIT
$R_{\theta JC(bot)}$	Junction-to-case (bottom) thermal resistance	N/A	N/A	N/A	N/A	N/A	°C/W

(1) For more information about traditional and new thermal metrics, see the *Semiconductor and IC package thermal metrics* application report.

6.4 Electrical Characteristics

over recommended operating free-air temperature range (unless otherwise noted)

PARAMETER	TEST CONDITIONS		V_{CC}	T_A = 25°C			SN54HC175		SN74HC175		UNIT
				MIN	TYP	MAX	MIN	MAX	MIN	MAX	
V_{OH}	$V_I = V_{IH}$ or V_{IL}	I_{OH} = −20 µA	2 V	1.9	1.998		1.9		1.9		V
			4.5 V	4.4	4.499		4.4		4.4		
			6 V	5.9	5.999		5.9		5.9		
		I_{OH} = −4 mA	4.5 V	3.98	4.3		3.7		3.84		
		I_{OH} = −5.2 mA	6 V	5.48	5.8		5.2		5.34		
V_{OL}	$V_I = V_{IH}$ or V_{IL}	I_{OL} = 20 µA	2 V		0.002	0.1		0.1		0.1	V
			4.5 V		0.001	0.1		0.1		0.1	
			6 V		0.001	0.1		0.1		0.1	
		I_{OL} = 4 mA	4.5 V		0.17	0.26		0.4		0.33	
		I_{OL} = 5.2 mA	6 V		0.15	0.26		0.4		0.33	
I_I	$V_I = V_{CC}$ or 0		6 V		±0.1	±100		±1000		±1000	nA
I_{CC}	$V_I = V_{CC}$ or 0,	I_O = 0	6 V			8		160		80	µA
C_i			2 V to 6 V		3	10		10		10	pF

6.5 Timing Requirements

over recommended operating free-air temperature range (unless otherwise noted)

			V_{CC}	T_A = 25°C		SN54HC175		SN74HC175		UNIT
				MIN	MAX	MIN	MAX	MIN	MAX	
f_{clock}	Clock frequency		2 V		6		4.2		5	MHz
			4.5 V		31		21		25	
			6 V		36		25		29	
t_w	Pulse duration	$\overline{CLR}$ low	2 V	80		120		100		ns
			4.5 V	16		24		20		
			6 V	14		20		17		
		CLK high or low	2 V	80		120		100		
			4.5 V	16		24		20		
			6 V	14		20		17		
t_{su}	Setup time before CLK ↑	Data	2 V	100		150		125		ns
			4.5 V	20		30		25		
			6 V	17		25		21		
		$\overline{CLR}$ inactive	2 V	100		150		125		
			4.5 V	20		30		25		
			6 V	17		25		21		

6.5 Timing Requirements (continued)

over recommended operating free-air temperature range (unless otherwise noted)

		V_{CC}	T_A = 25°C		SN54HC175		SN74HC175		UNIT
			MIN	MAX	MIN	MAX	MIN	MAX	
t_h	Hold time, data after CLK ↑	2 V	0		0		0		ns
		4.5 V	0		0		0		
		6 V	0		0		0		

6.6 Switching Characteristics

over recommended operating free-air temperature range, C_L = 50 pF (unless otherwise noted) (see Parameter Measurement Information)

PARAMETER	FROM (INPUT)	TO (OUTPUT)	V_{CC}	T_A = 25°C			SN54HC175		SN74HC175		UNIT
				MIN	TYP	MAX	MIN	MAX	MIN	MAX	
f_{max}			2 V	6	12		4.2		5		MHz
			4.5 V	31	50		21		25		
			6 V	36	60		25		29		
t_{pd}	$\overline{CLR}$	Any	2 V		52	150		255		190	ns
			4.5 V		15	30		45		38	
			6 V		13	26		38		32	
	CLK	Any	2 V		58	150		255		190	
			4.5 V		16	30		45		38	
			6 V		13	26		38		32	
t_t		Any	2 V		38	75		110		90	ns
			4.5 V		8	15		22		19	
			6 V		6	13		19		16	

6.7 Operating Characteristics

T_A = 25°C

PARAMETER		TEST CONDITIONS	TYP	UNIT
C_{pd}	Power dissipation capacitance per flip-flop	No load	30	pF

Copyright © 2022 Texas Instruments Incorporated

7 Parameter Measurement Information

Phase relationships between waveforms were chosen arbitrarily. All input pulses are supplied by generators having the following characteristics: PRR ≤ 1 MHz, Z_O = 50 Ω, t_t < 6 ns.

For clock inputs, f_{max} is measured when the input duty cycle is 50%.

The outputs are measured one at a time with one input transition per measurement.

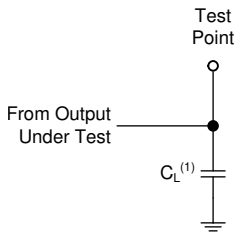

(1) C_L includes probe and test-fixture capacitance.

図 7-1. Load Circuit for Push-Pull Outputs

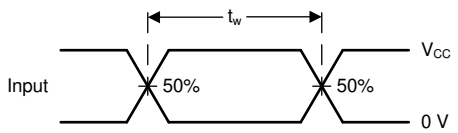

図 7-2. Voltage Waveforms, Standard CMOS Inputs Pulse Duration

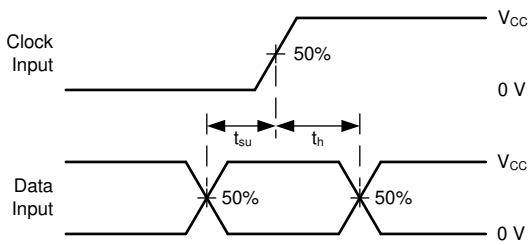

図 7-3. Voltage Waveforms, Standard CMOS Inputs Setup and Hold Times

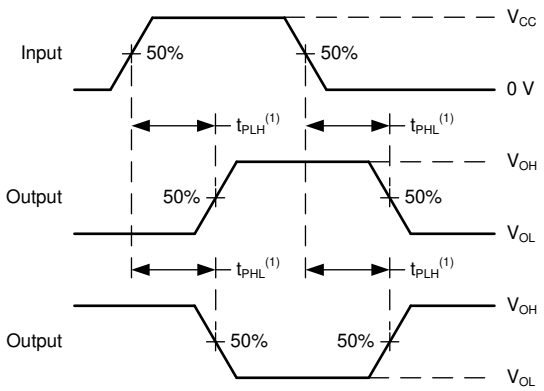

(1) The greater between t_{PLH} and t_{PHL} is the same as t_{pd}.

図 7-4. Voltage Waveforms, Propagation Delays for Standard CMOS Inputs

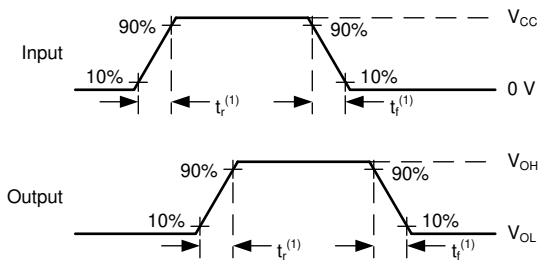

(1) The greater between t_r and t_f is the same as t_t.

図 7-5. Voltage Waveforms, Input and Output Transition Times for Standard CMOS Inputs

8 Detailed Description

8.1 Overview

These positive-edge-triggered D-type flip-flops have a direct clear ($\overline{CLR}$) input. The ’HC175 devices feature complementary outputs from each flip-flop.

Information at the data (D) inputs meeting the setup time requirements is transferred to the outputs on the positive-going edge of the clock (CLK) pulse. Clock triggering occurs at a particular voltage level and is not related directly to the transition time of the positive-going edge of CLK. When CLK is at either the high or low level, the D input has no effect at the output.

8.2 Functional Block Diagram

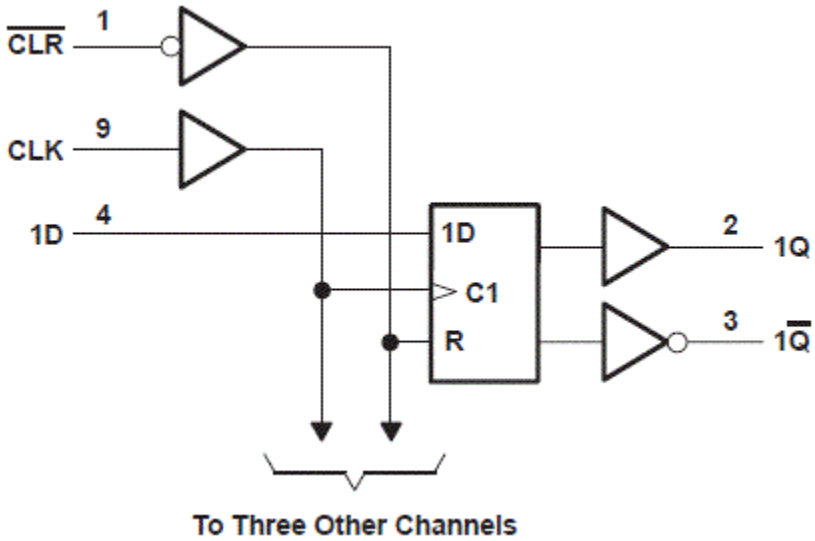

Pin numbers shown are for the D, DB, J, N, NS, PW, and W packages.

8.3 Device Functional Modes

表 8-1. Function Table (each flip-flop)

INPUTS			OUTPUTS	
$\overline{CLR}$	CLK	D	Q	$\overline{Q}$
L	X	X	L	H
H	↑	H	H	L
H	↑	L	L	H
H	L	X	Q_0	$\overline{Q}_0$

Copyright © 2022 Texas Instruments Incorporated

9 Power Supply Recommendations

The power supply can be any voltage between the minimum and maximum supply voltage rating located in the *Recommended Operating Conditions*. Each V_{CC} terminal should have a good bypass capacitor to prevent power disturbance. A 0.1-μF capacitor is recommended for this device. It is acceptable to parallel multiple bypass caps to reject different frequencies of noise. The 0.1-μF and 1-μF capacitors are commonly used in parallel. The bypass capacitor should be installed as close to the power terminal as possible for best results.

10 Layout

10.1 Layout Guidelines

When using multiple-input and multiple-channel logic devices inputs must not ever be left floating. In many cases, functions or parts of functions of digital logic devices are unused; for example, when only two inputs of a triple-input AND gate are used or only 3 of the 4 buffer gates are used. Such unused input pins must not be left unconnected because the undefined voltages at the outside connections result in undefined operational states. All unused inputs of digital logic devices must be connected to a logic high or logic low voltage, as defined by the input voltage specifications, to prevent them from floating. The logic level that must be applied to any particular unused input depends on the function of the device. Generally, the inputs are tied to GND or V_{CC}, whichever makes more sense for the logic function or is more convenient.

Copyright © 2022 Texas Instruments Incorporated

11 Device and Documentation Support

TI offers an extensive line of development tools. Tools and software to evaluate the performance of the device, generate code, and develop solutions are listed below.

11.1 Receiving Notification of Documentation Updates

To receive notification of documentation updates, navigate to the device product folder on ti.com. Click on *Subscribe to updates* to register and receive a weekly digest of any product information that has changed. For change details, review the revision history included in any revised document.

11.2 サポート・リソース

TI E2E™ サポート・フォーラムは、エンジニアが検証済みの回答と設計に関するヒントをエキスパートから迅速かつ直接得ることができる場所です。既存の回答を検索したり、独自の質問をしたりすることで、設計で必要な支援を迅速に得ることができます。

リンクされているコンテンツは、該当する貢献者により、現状のまま提供されるものです。これらは TI の仕様を構成するものではなく、必ずしも TI の見解を反映したものではありません。TI の使用条件を参照してください。

11.3 Trademarks

TI E2E™ is a trademark of Texas Instruments.
すべての商標は、それぞれの所有者に帰属します。

11.4 Electrostatic Discharge Caution

This integrated circuit can be damaged by ESD. Texas Instruments recommends that all integrated circuits be handled with appropriate precautions. Failure to observe proper handling and installation procedures can cause damage.

ESD damage can range from subtle performance degradation to complete device failure. Precision integrated circuits may be more susceptible to damage because very small parametric changes could cause the device not to meet its published specifications.

11.5 Glossary

TI Glossary	This glossary lists and explains terms, acronyms, and definitions.

12 Mechanical, Packaging, and Orderable Information

The following pages include mechanical, packaging, and orderable information. This information is the most current data available for the designated devices. This data is subject to change without notice and revision of this document. For browser-based versions of this data sheet, refer to the left-hand navigation.

Copyright © 2022 Texas Instruments Incorporated

PACKAGING INFORMATION

Orderable Device	Status (1)	Package Type	Package Drawing	Pins	Package Qty	Eco Plan (2)	Lead finish/ Ball material (6)	MSL Peak Temp (3)	Op Temp (°C)	Device Marking (4/5)	Samples
84089012A	ACTIVE	LCCC	FK	20	55	Non-RoHS & Green	SNPB	N / A for Pkg Type	-55 to 125	84089012A SNJ54HC 175FK	Samples
8408901EA	ACTIVE	CDIP	J	16	25	Non-RoHS & Green	SNPB	N / A for Pkg Type	-55 to 125	8408901EA SNJ54HC175J	Samples
8408901FA	ACTIVE	CFP	W	16	25	Non-RoHS & Green	SNPB	N / A for Pkg Type	-55 to 125	8408901FA SNJ54HC175W	Samples
JM38510/65308BEA	ACTIVE	CDIP	J	16	25	Non-RoHS & Green	SNPB	N / A for Pkg Type	-55 to 125	JM38510/ 65308BEA	Samples
M38510/65308BEA	ACTIVE	CDIP	J	16	25	Non-RoHS & Green	SNPB	N / A for Pkg Type	-55 to 125	JM38510/ 65308BEA	Samples
SN54HC175J	ACTIVE	CDIP	J	16	25	Non-RoHS & Green	SNPB	N / A for Pkg Type	-55 to 125	SN54HC175J	Samples
SN74HC175D	OBSOLETE	SOIC	D	16		TBD	Call TI	Call TI	-40 to 85	HC175	
SN74HC175DBR	ACTIVE	SSOP	DB	16	2000	RoHS & Green	NIPDAU	Level-1-260C-UNLIM	-40 to 85	HC175	Samples
SN74HC175DR	ACTIVE	SOIC	D	16	2500	RoHS & Green	NIPDAU | SN	Level-1-260C-UNLIM	-40 to 85	HC175	Samples
SN74HC175N	ACTIVE	PDIP	N	16	25	RoHS & Green	NIPDAU	N / A for Pkg Type	-40 to 85	SN74HC175N	Samples
SN74HC175NE4	ACTIVE	PDIP	N	16	25	RoHS & Green	NIPDAU	N / A for Pkg Type	-40 to 85	SN74HC175N	Samples
SN74HC175NSR	ACTIVE	SO	NS	16	2000	RoHS & Green	NIPDAU	Level-1-260C-UNLIM	-40 to 85	HC175	Samples
SN74HC175PW	OBSOLETE	TSSOP	PW	16		TBD	Call TI	Call TI	-40 to 85	HC175	
SN74HC175PWR	ACTIVE	TSSOP	PW	16	2000	RoHS & Green	NIPDAU	Level-1-260C-UNLIM	-40 to 85	HC175	Samples
SNJ54HC175FK	ACTIVE	LCCC	FK	20	55	Non-RoHS & Green	SNPB	N / A for Pkg Type	-55 to 125	84089012A SNJ54HC 175FK	Samples
SNJ54HC175J	ACTIVE	CDIP	J	16	25	Non-RoHS & Green	SNPB	N / A for Pkg Type	-55 to 125	8408901EA SNJ54HC175J	Samples
SNJ54HC175W	ACTIVE	CFP	W	16	25	Non-RoHS & Green	SNPB	N / A for Pkg Type	-55 to 125	8408901FA SNJ54HC175W	Samples

(1) The marketing status values are defined as follows:

ACTIVE: Product device recommended for new designs.
LIFEBUY: TI has announced that the device will be discontinued, and a lifetime-buy period is in effect.
NRND: Not recommended for new designs. Device is in production to support existing customers, but TI does not recommend using this part in a new design.
PREVIEW: Device has been announced but is not in production. Samples may or may not be available.
OBSOLETE: TI has discontinued the production of the device.

(2) **RoHS:** TI defines "RoHS" to mean semiconductor products that are compliant with the current EU RoHS requirements for all 10 RoHS substances, including the requirement that RoHS substance do not exceed 0.1% by weight in homogeneous materials. Where designed to be soldered at high temperatures, "RoHS" products are suitable for use in specified lead-free processes. TI may reference these types of products as "Pb-Free".
RoHS Exempt: TI defines "RoHS Exempt" to mean products that contain lead but are compliant with EU RoHS pursuant to a specific EU RoHS exemption.
Green: TI defines "Green" to mean the content of Chlorine (Cl) and Bromine (Br) based flame retardants meet JS709B low halogen requirements of <=1000ppm threshold. Antimony trioxide based flame retardants must also meet the <=1000ppm threshold requirement.

(3) MSL, Peak Temp. - The Moisture Sensitivity Level rating according to the JEDEC industry standard classifications, and peak solder temperature.

(4) There may be additional marking, which relates to the logo, the lot trace code information, or the environmental category on the device.

(5) Multiple Device Markings will be inside parentheses. Only one Device Marking contained in parentheses and separated by a "~" will appear on a device. If a line is indented then it is a continuation of the previous line and the two combined represent the entire Device Marking for that device.

(6) Lead finish/Ball material - Orderable Devices may have multiple material finish options. Finish options are separated by a vertical ruled line. Lead finish/Ball material values may wrap to two lines if the finish value exceeds the maximum column width.

Important Information and Disclaimer: The information provided on this page represents TI's knowledge and belief as of the date that it is provided. TI bases its knowledge and belief on information provided by third parties, and makes no representation or warranty as to the accuracy of such information. Efforts are underway to better integrate information from third parties. TI has taken and continues to take reasonable steps to provide representative and accurate information but may not have conducted destructive testing or chemical analysis on incoming materials and chemicals. TI and TI suppliers consider certain information to be proprietary, and thus CAS numbers and other limited information may not be available for release.

In no event shall TI's liability arising out of such information exceed the total purchase price of the TI part(s) at issue in this document sold by TI to Customer on an annual basis.

OTHER QUALIFIED VERSIONS OF SN54HC175, SN74HC175 :

- Catalog : SN74HC175
- Military : SN54HC175

NOTE: Qualified Version Definitions:

- Catalog - TI's standard catalog product

- Military - QML certified for Military and Defense Applications

TAPE AND REEL INFORMATION

REEL DIMENSIONS

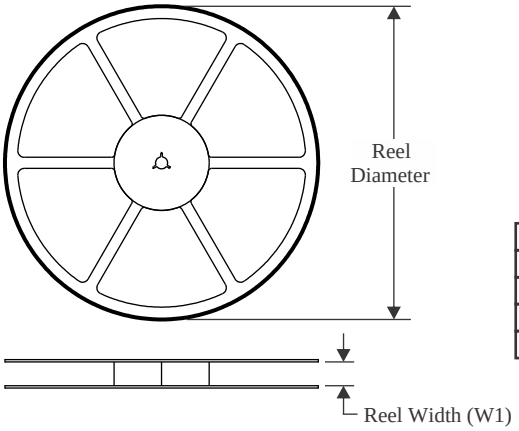

TAPE DIMENSIONS

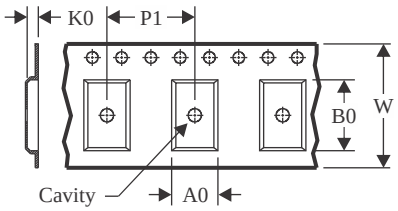

A0	Dimension designed to accommodate the component width
B0	Dimension designed to accommodate the component length
K0	Dimension designed to accommodate the component thickness
W	Overall width of the carrier tape
P1	Pitch between successive cavity centers

QUADRANT ASSIGNMENTS FOR PIN 1 ORIENTATION IN TAPE

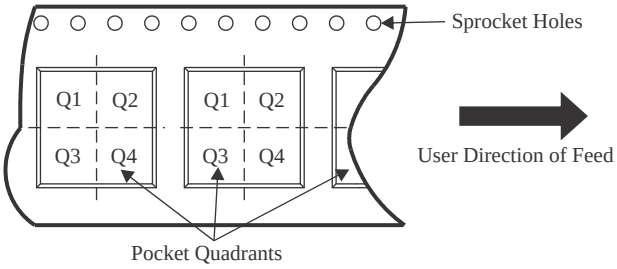

*All dimensions are nominal

Device	Package Type	Package Drawing	Pins	SPQ	Reel Diameter (mm)	Reel Width W1 (mm)	A0 (mm)	B0 (mm)	K0 (mm)	P1 (mm)	W (mm)	Pin1 Quadrant
SN74HC175DBR	SSOP	DB	16	2000	330.0	16.4	8.35	6.6	2.4	12.0	16.0	Q1
SN74HC175DR	SOIC	D	16	2500	330.0	16.4	6.5	10.3	2.1	8.0	16.0	Q1
SN74HC175NSR	SO	NS	16	2000	330.0	16.4	8.2	10.5	2.5	12.0	16.0	Q1
SN74HC175PWR	TSSOP	PW	16	2000	330.0	12.4	6.9	5.6	1.6	8.0	12.0	Q1
SN74HC175PWR	TSSOP	PW	16	2000	330.0	12.4	6.9	5.6	1.6	8.0	12.0	Q1

TAPE AND REEL BOX DIMENSIONS

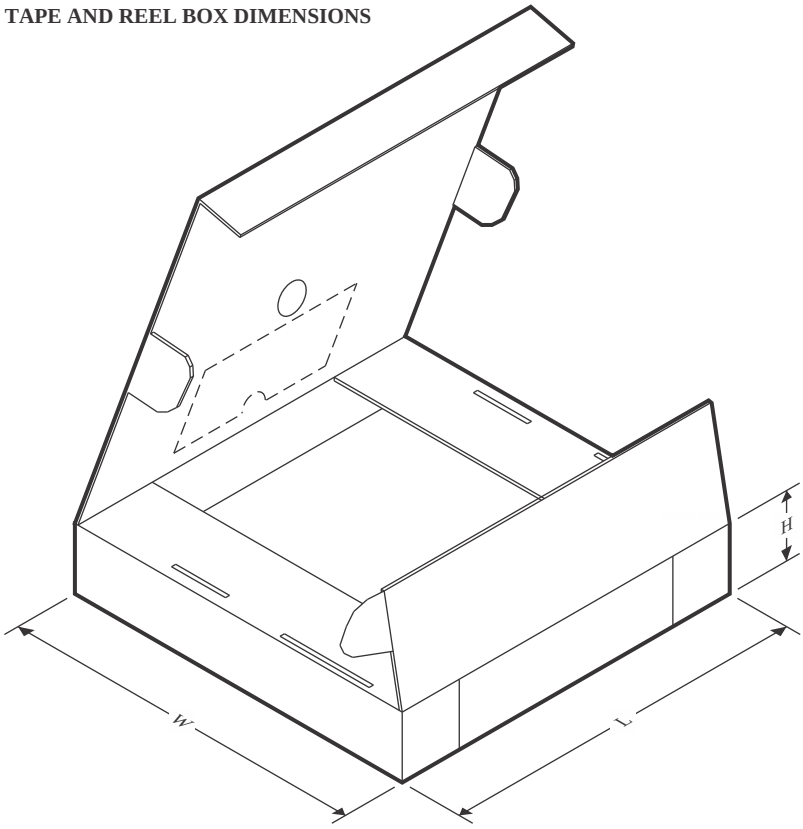

*All dimensions are nominal

Device	Package Type	Package Drawing	Pins	SPQ	Length (mm)	Width (mm)	Height (mm)
SN74HC175DBR	SSOP	DB	16	2000	356.0	356.0	35.0
SN74HC175DR	SOIC	D	16	2500	356.0	356.0	35.0
SN74HC175NSR	SO	NS	16	2000	356.0	356.0	35.0
SN74HC175PWR	TSSOP	PW	16	2000	356.0	356.0	35.0
SN74HC175PWR	TSSOP	PW	16	2000	356.0	356.0	35.0

TUBE

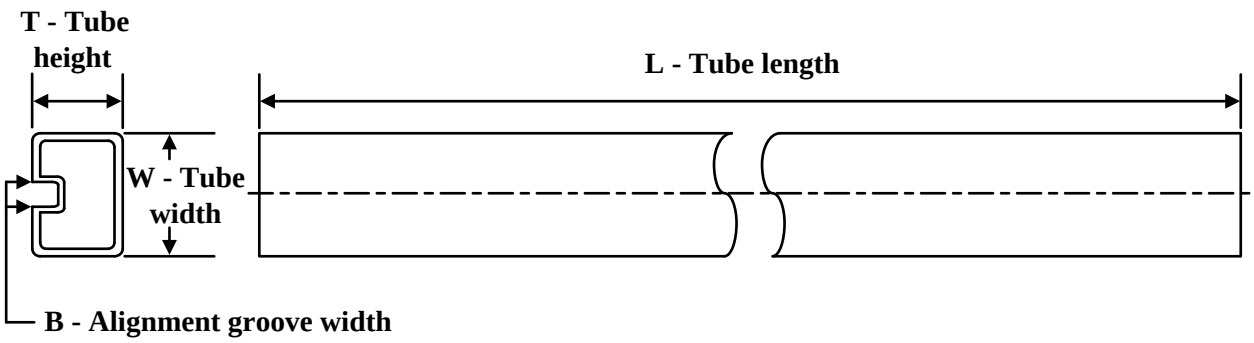

*All dimensions are nominal

Device	Package Name	Package Type	Pins	SPQ	L (mm)	W (mm)	T (µm)	B (mm)
84089012A	FK	LCCC	20	55	506.98	12.06	2030	NA
8408901FA	W	CFP	16	25	506.98	26.16	6220	NA
SN74HC175N	N	PDIP	16	25	506	13.97	11230	4.32
SN74HC175N	N	PDIP	16	25	506	13.97	11230	4.32
SN74HC175NE4	N	PDIP	16	25	506	13.97	11230	4.32
SN74HC175NE4	N	PDIP	16	25	506	13.97	11230	4.32
SNJ54HC175FK	FK	LCCC	20	55	506.98	12.06	2030	NA
SNJ54HC175W	W	CFP	16	25	506.98	26.16	6220	NA

N (R–PDIP–T**) PLASTIC DUAL–IN–LINE PACKAGE

16 PINS SHOWN

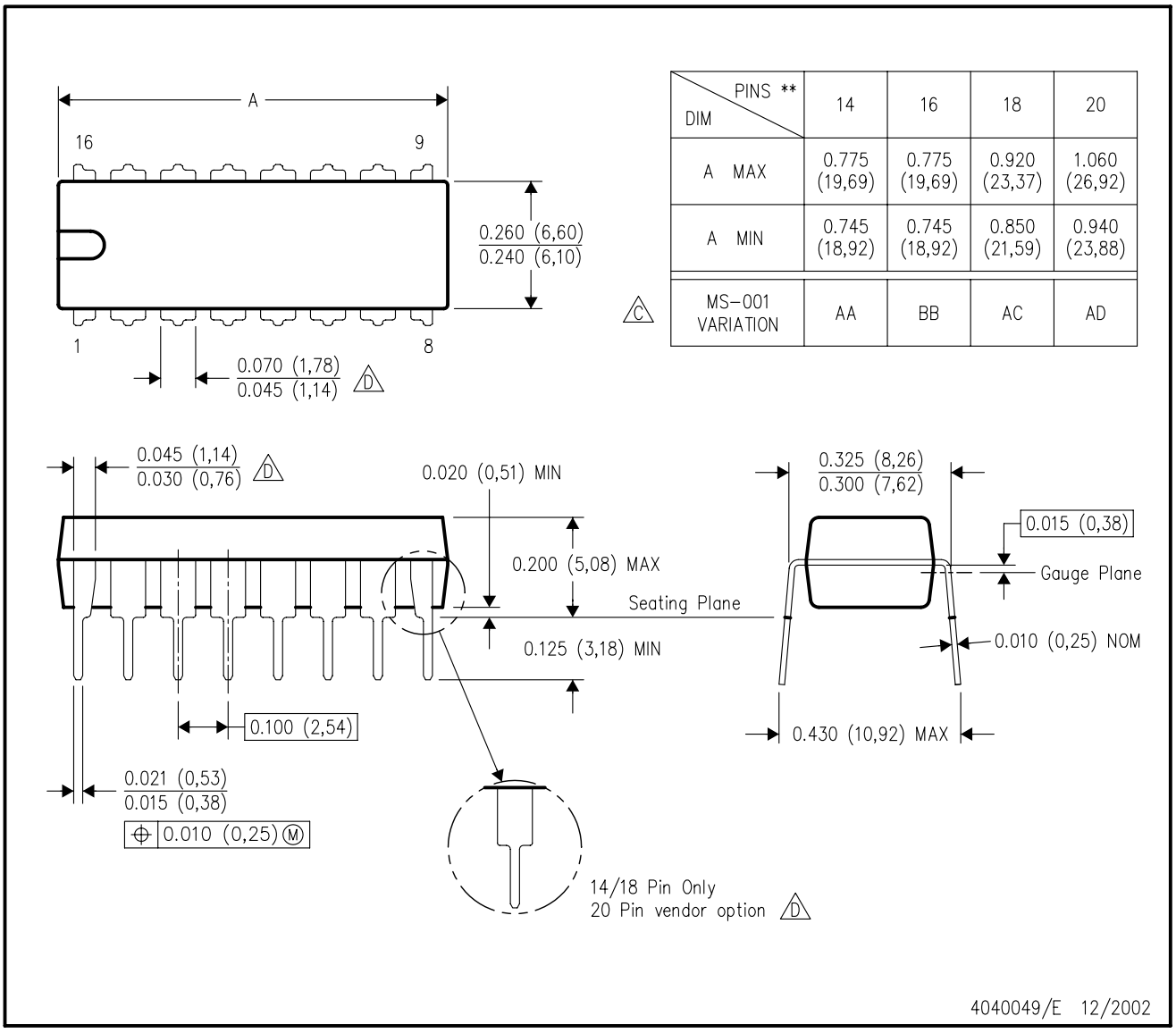

DIM \ PINS **	14	16	18	20
A MAX	0.775 (19,69)	0.775 (19,69)	0.920 (23,37)	1.060 (26,92)
A MIN	0.745 (18,92)	0.745 (18,92)	0.850 (21,59)	0.940 (23,88)
MS–001 VARIATION (C)	AA	BB	AC	AD

NOTES:
A. All linear dimensions are in inches (millimeters).
B. This drawing is subject to change without notice.
C. Falls within JEDEC MS–001, except 18 and 20 pin minimum body length (Dim A).
D. The 20 pin end lead shoulder width is a vendor option, either half or full width.

W (R–GDFP–F16) CERAMIC DUAL FLATPACK

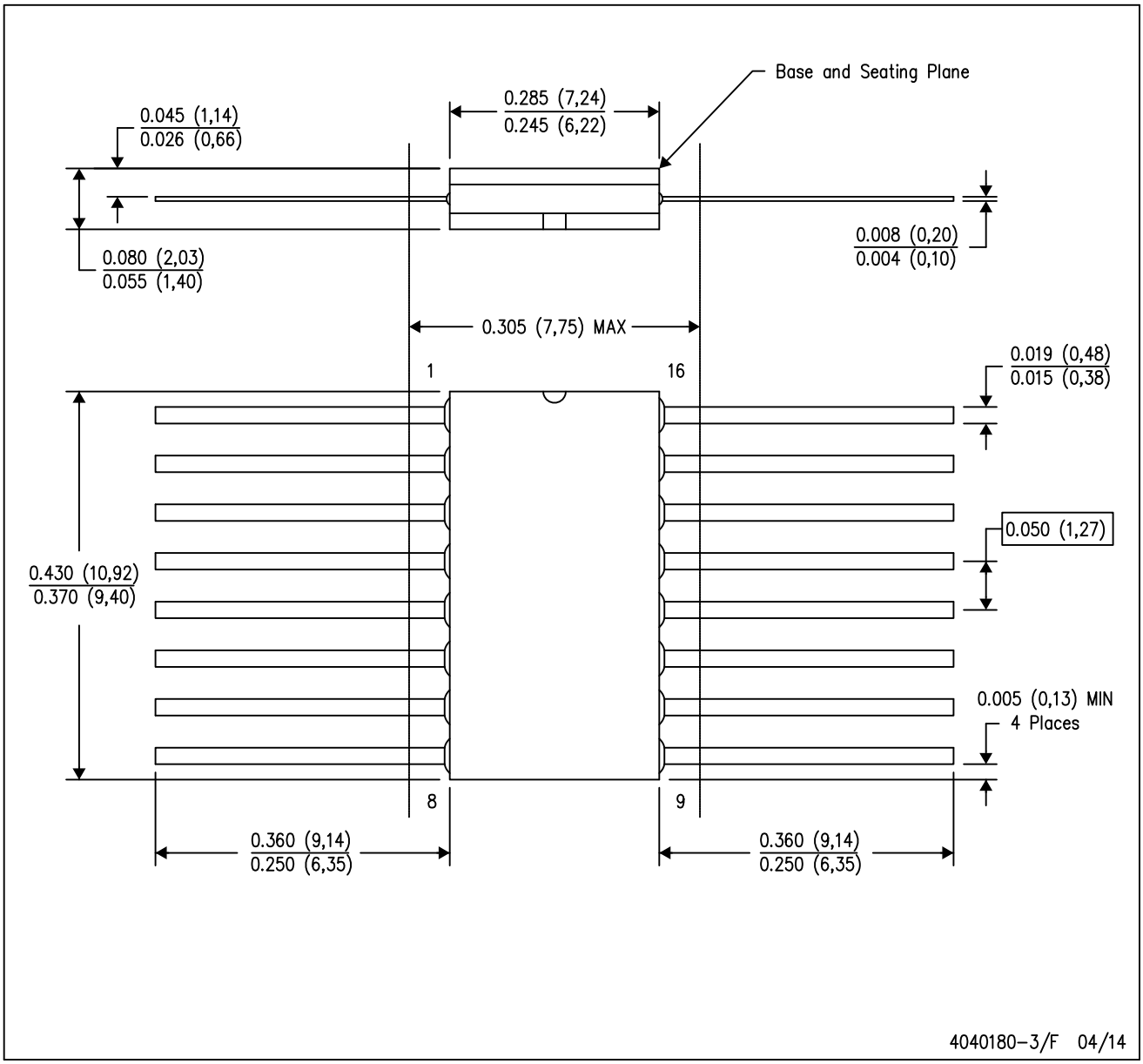

NOTES:
A. All linear dimensions are in inches (millimeters).
B. This drawing is subject to change without notice.
C. This package can be hermetically sealed with a ceramic lid using glass frit.
D. Index point is provided on cap for terminal identification only.
E. Falls within MIL STD 1835 GDFP2–F16

GENERIC PACKAGE VIEW

FK 20

LCCC - 2.03 mm max height

8.89 x 8.89, 1.27 mm pitch

LEADLESS CERAMIC CHIP CARRIER

This image is a representation of the package family, actual package may vary.
Refer to the product data sheet for package details.

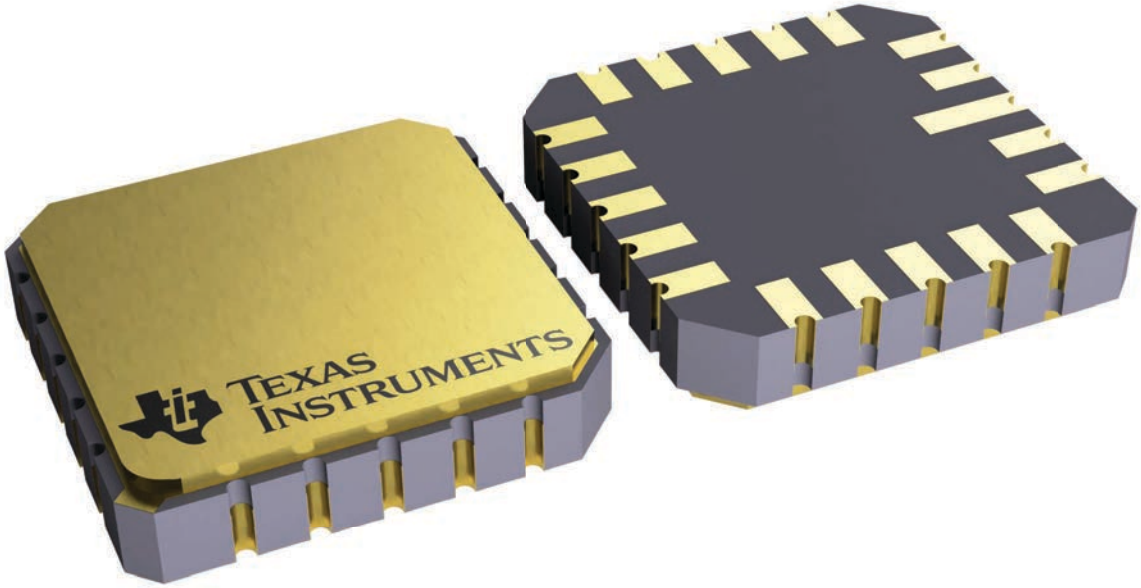

4229370VA\

J (R–GDIP–T**) CERAMIC DUAL IN–LINE PACKAGE

14 LEADS SHOWN

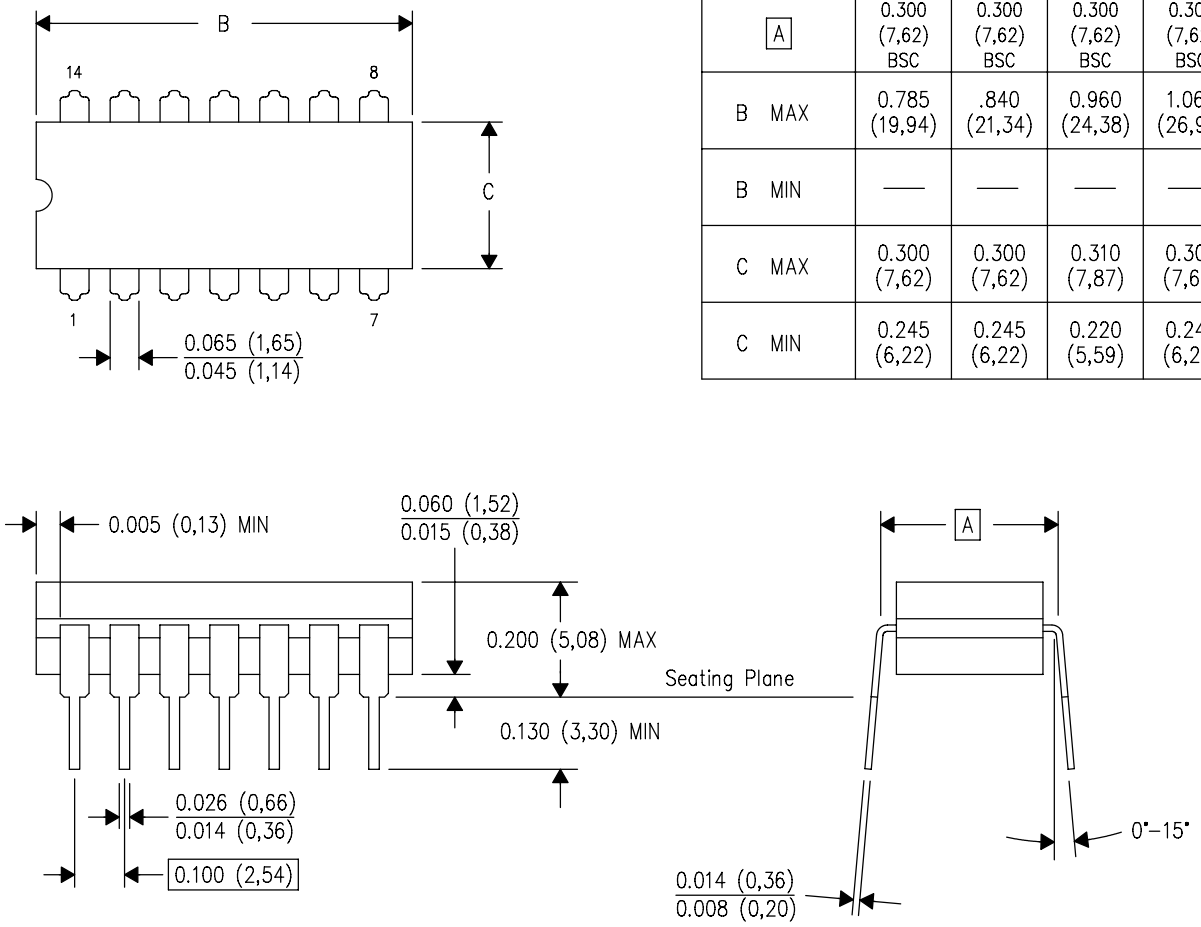

DIM \ PINS **	14	16	18	20
A	0.300 (7,62) BSC	0.300 (7,62) BSC	0.300 (7,62) BSC	0.300 (7,62) BSC
B MAX	0.785 (19,94)	.840 (21,34)	0.960 (24,38)	1.060 (26,92)
B MIN	—	—	—	—
C MAX	0.300 (7,62)	0.300 (7,62)	0.310 (7,87)	0.300 (7,62)
C MIN	0.245 (6,22)	0.245 (6,22)	0.220 (5,59)	0.245 (6,22)

4040083/F 03/03

NOTES:
- A. All linear dimensions are in inches (millimeters).
- B. This drawing is subject to change without notice.
- C. This package is hermetically sealed with a ceramic lid using glass frit.
- D. Index point is provided on cap for terminal identification only on press ceramic glass frit seal only.
- E. Falls within MIL STD 1835 GDIP1–T14, GDIP1–T16, GDIP1–T18 and GDIP1–T20.

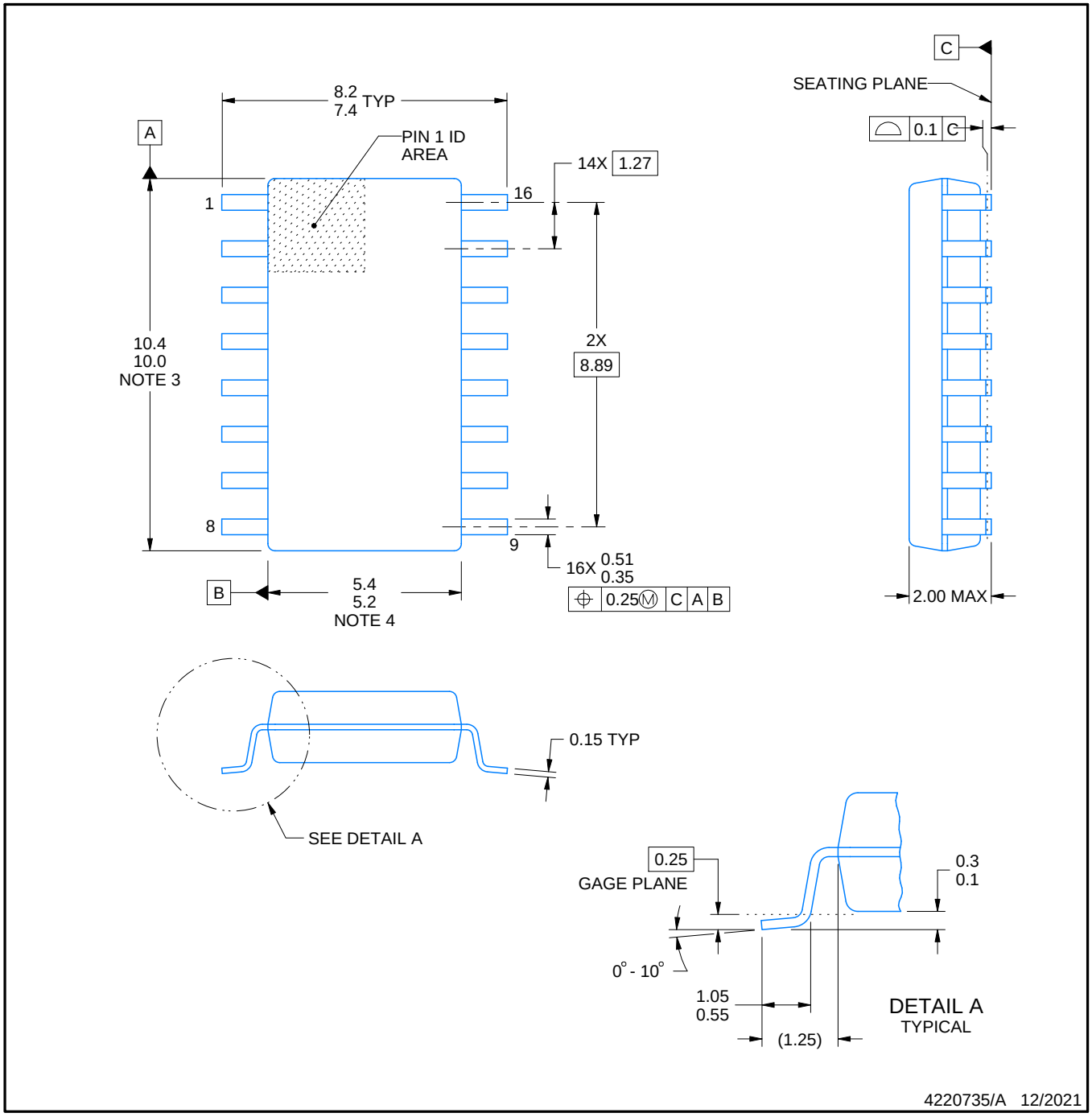

NOTES:

1. All linear dimensions are in millimeters. Dimensions in parenthesis are for reference only. Dimensioning and tolerancing per ASME Y14.5M.
2. This drawing is subject to change without notice.
3. This dimension does not include mold flash, protrusions, or gate burrs. Mold flash, protrusions, or gate burrs shall not exceed 0.15 mm, per side.
4. This dimension does not include interlead flash. Interlead flash shall not exceed 0.25 mm, per side.

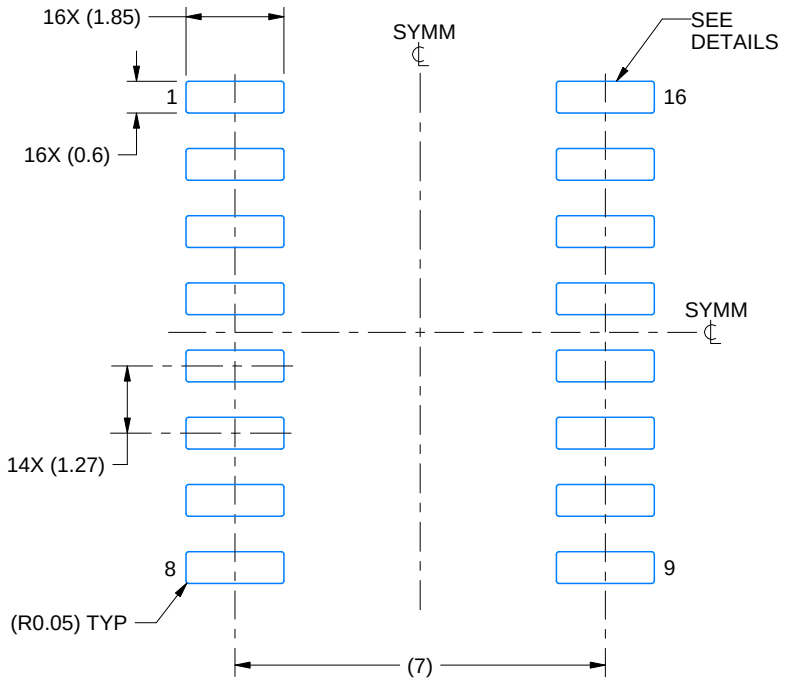

LAND PATTERN EXAMPLE
SCALE:7X

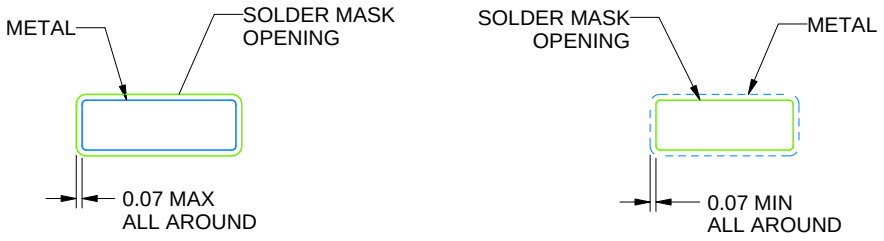

NON SOLDER MASK DEFINED

SOLDER MASK DEFINED

SOLDER MASK DETAILS

4220735/A 12/2021

NOTES: (continued)

5. Publication IPC-7351 may have alternate designs.
6. Solder mask tolerances between and around signal pads can vary based on board fabrication site.

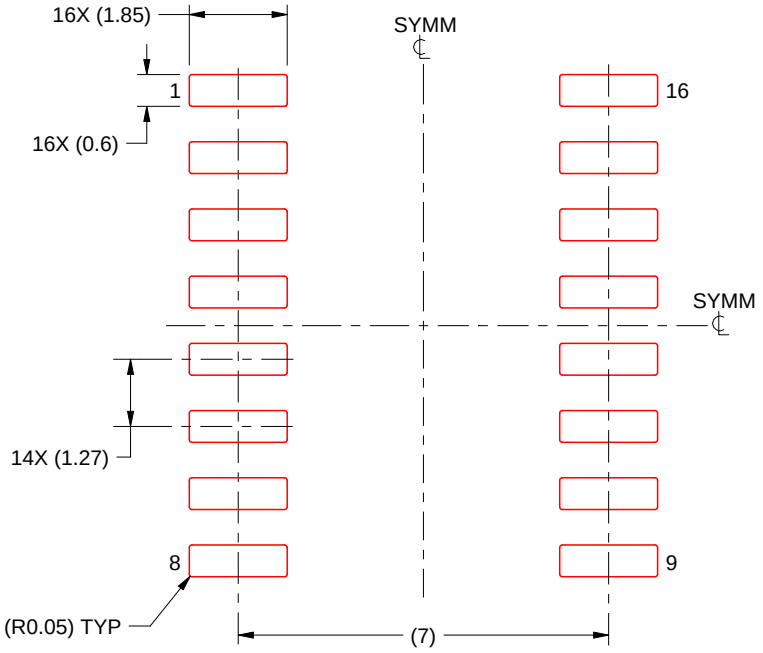

SOLDER PASTE EXAMPLE
BASED ON 0.125 mm THICK STENCIL
SCALE:7X

4220735/A 12/2021

NOTES: (continued)

7. Laser cutting apertures with trapezoidal walls and rounded corners may offer better paste release. IPC-7525 may have alternate design recommendations.
8. Board assembly site may have different recommendations for stencil design.

D (R–PDSO–G16) PLASTIC SMALL OUTLINE

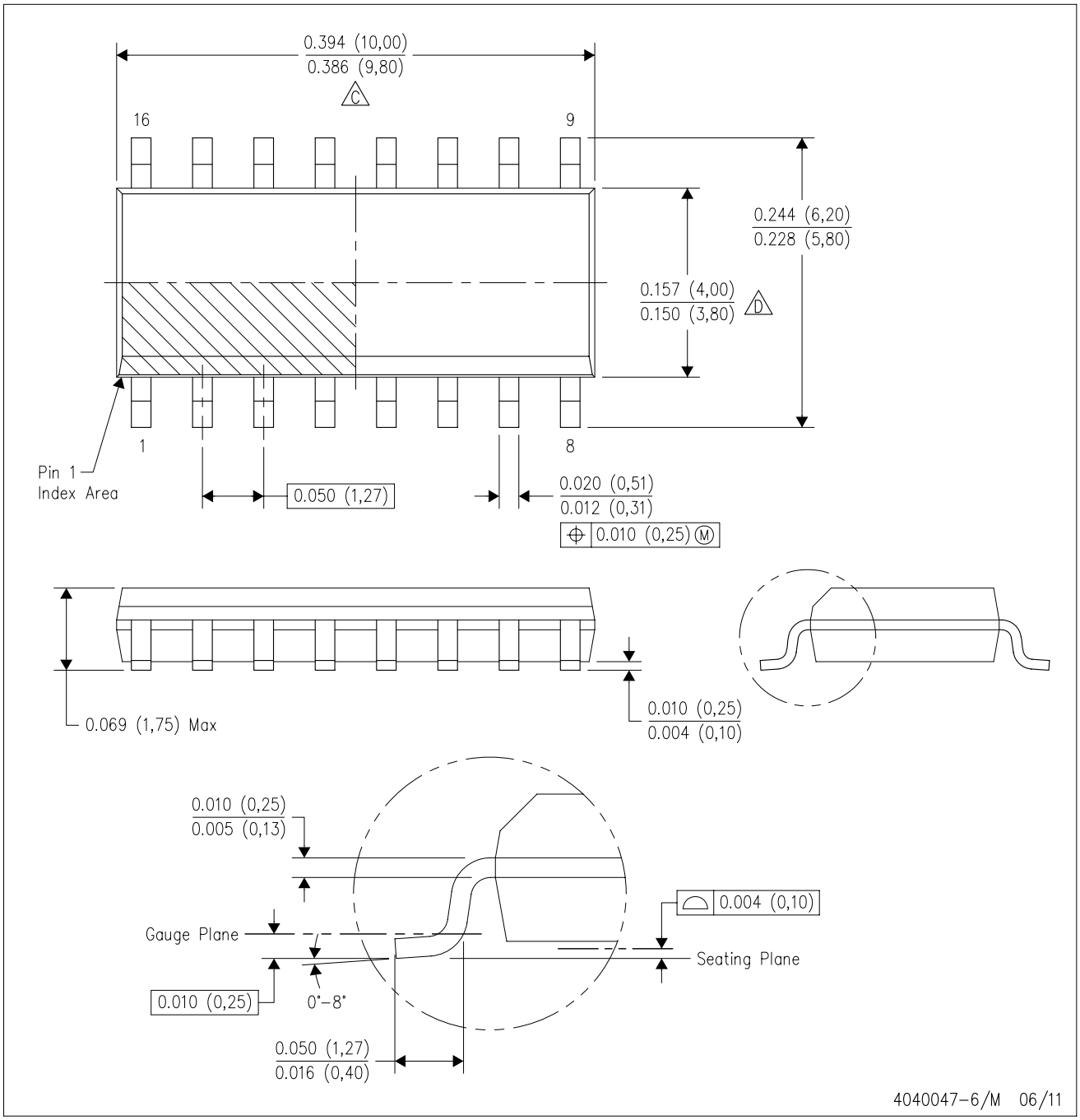

NOTES:
A. All linear dimensions are in inches (millimeters).
B. This drawing is subject to change without notice.
C. Body length does not include mold flash, protrusions, or gate burrs. Mold flash, protrusions, or gate burrs shall not exceed 0.006 (0,15) each side.
D. Body width does not include interlead flash. Interlead flash shall not exceed 0.017 (0,43) each side.
E. Reference JEDEC MS–012 variation AC.

PW0016A

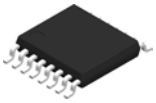

PACKAGE OUTLINE

TSSOP - 1.2 mm max height

SMALL OUTLINE PACKAGE

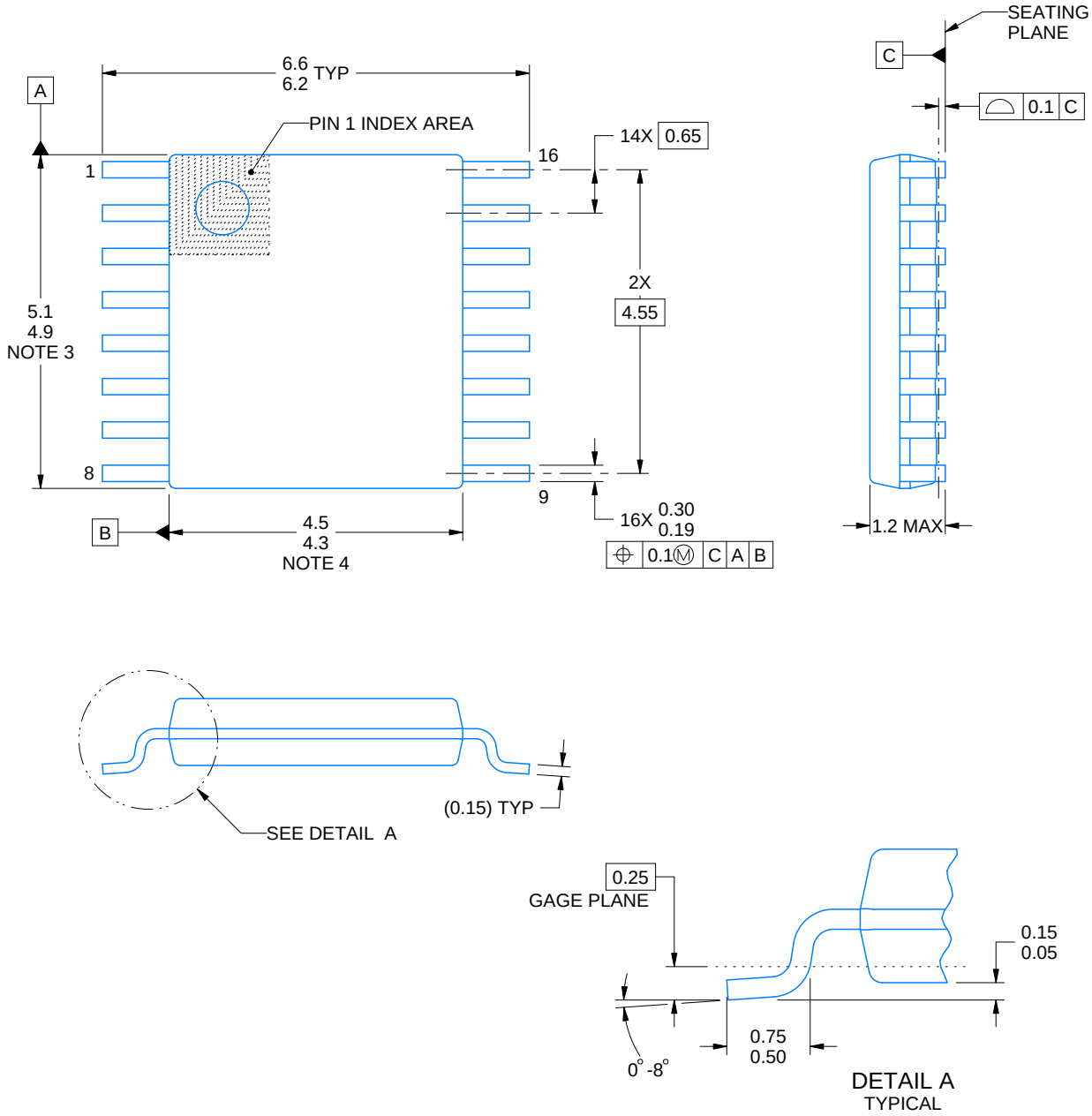

NOTES:

1. All linear dimensions are in millimeters. Any dimensions in parenthesis are for reference only. Dimensioning and tolerancing per ASME Y14.5M.
2. This drawing is subject to change without notice.
3. This dimension does not include mold flash, protrusions, or gate burrs. Mold flash, protrusions, or gate burrs shall not exceed 0.15 mm per side.
4. This dimension does not include interlead flash. Interlead flash shall not exceed 0.25 mm per side.
5. Reference JEDEC registration MO-153.

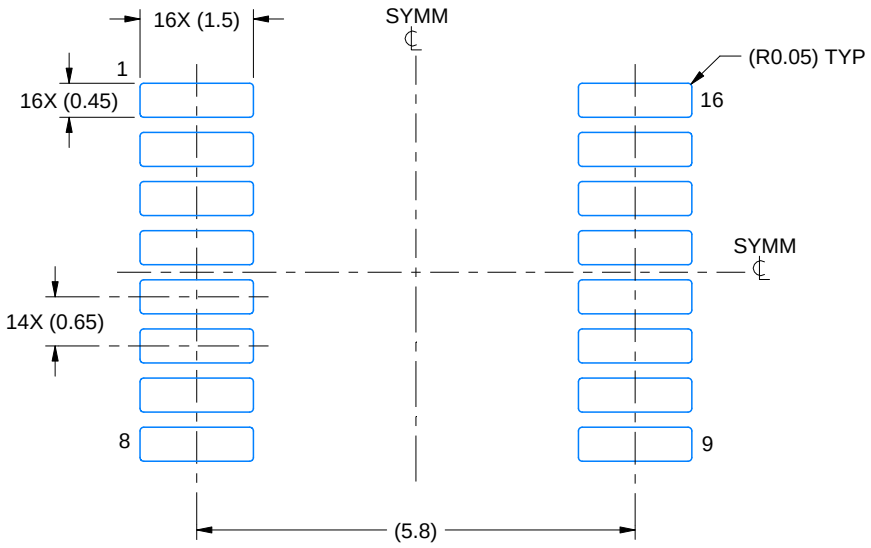

LAND PATTERN EXAMPLE
EXPOSED METAL SHOWN
SCALE: 10X

NON-SOLDER MASK DEFINED (PREFERRED)

SOLDER MASK DEFINED

SOLDER MASK DETAILS

4220204/A 02/2017

NOTES: (continued)

6. Publication IPC-7351 may have alternate designs.
7. Solder mask tolerances between and around signal pads can vary based on board fabrication site.

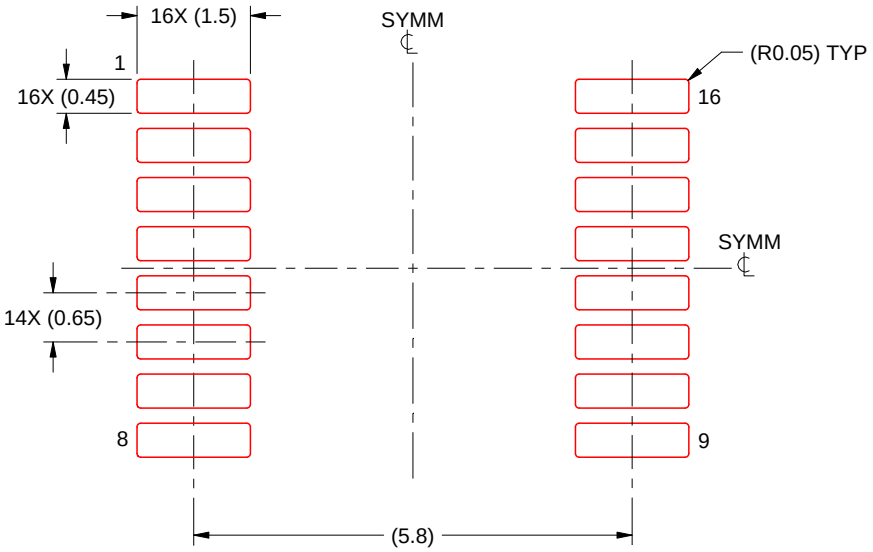

SOLDER PASTE EXAMPLE
BASED ON 0.125 mm THICK STENCIL
SCALE: 10X

4220204/A 02/2017

NOTES: (continued)

8. Laser cutting apertures with trapezoidal walls and rounded corners may offer better paste release. IPC-7525 may have alternate design recommendations.
9. Board assembly site may have different recommendations for stencil design.

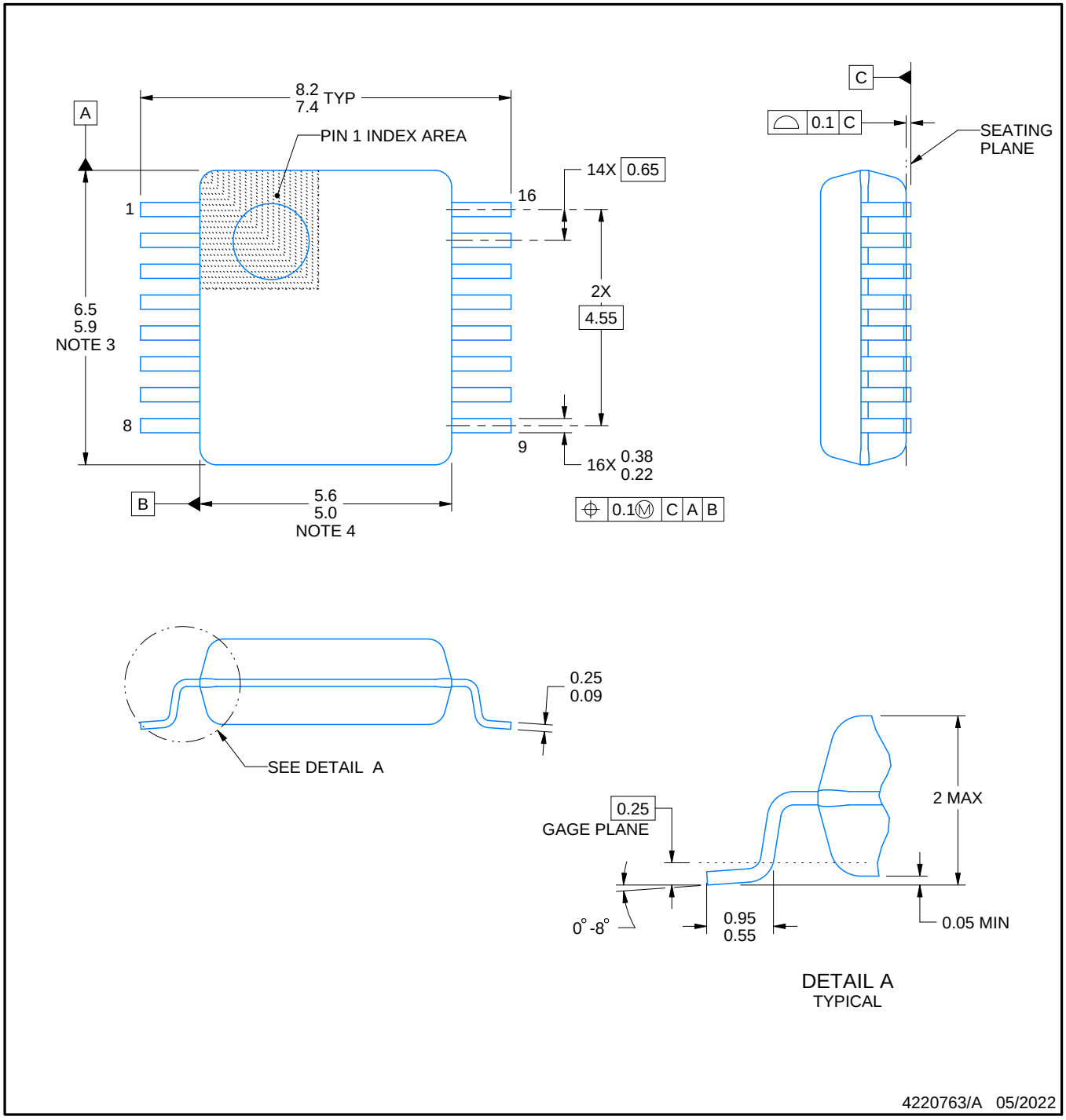

NOTES:

1. All linear dimensions are in millimeters. Any dimensions in parenthesis are for reference only. Dimensioning and tolerancing per ASME Y14.5M.
2. This drawing is subject to change without notice.
3. This dimension does not include mold flash, protrusions, or gate burrs. Mold flash, protrusions, or gate burrs shall not exceed 0.15 mm per side.
4. Reference JEDEC registration MO-150.

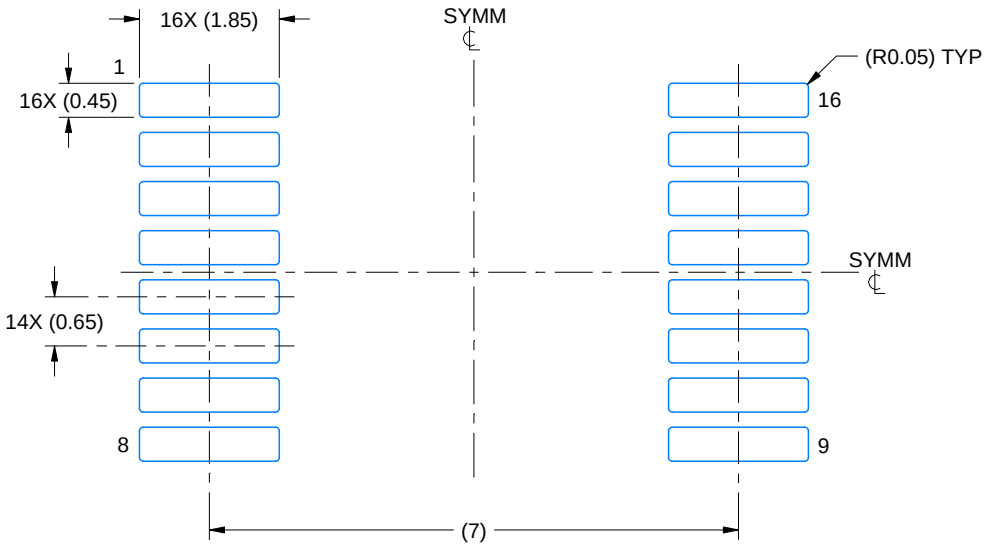

LAND PATTERN EXAMPLE
EXPOSED METAL SHOWN
SCALE: 10X

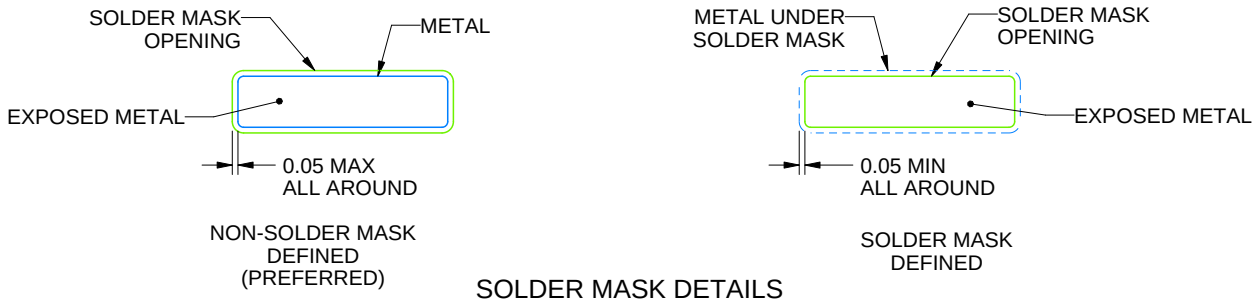

SOLDER MASK DETAILS

4220763/A 05/2022

NOTES: (continued)

5. Publication IPC-7351 may have alternate designs.
6. Solder mask tolerances between and around signal pads can vary based on board fabrication site.

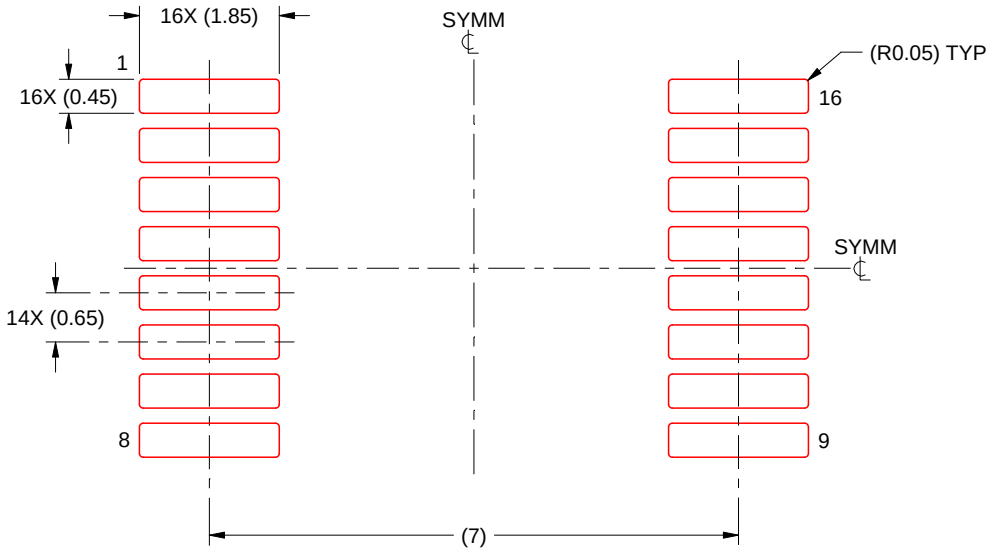

SOLDER PASTE EXAMPLE
BASED ON 0.125 mm THICK STENCIL
SCALE: 10X

4220763/A 05/2022

NOTES: (continued)

7. Laser cutting apertures with trapezoidal walls and rounded corners may offer better paste release. IPC-7525 may have alternate design recommendations.
8. Board assembly site may have different recommendations for stencil design.

MECHANICAL DATA

NS (R-PDSO-G)** **PLASTIC SMALL-OUTLINE PACKAGE**

14-PINS SHOWN

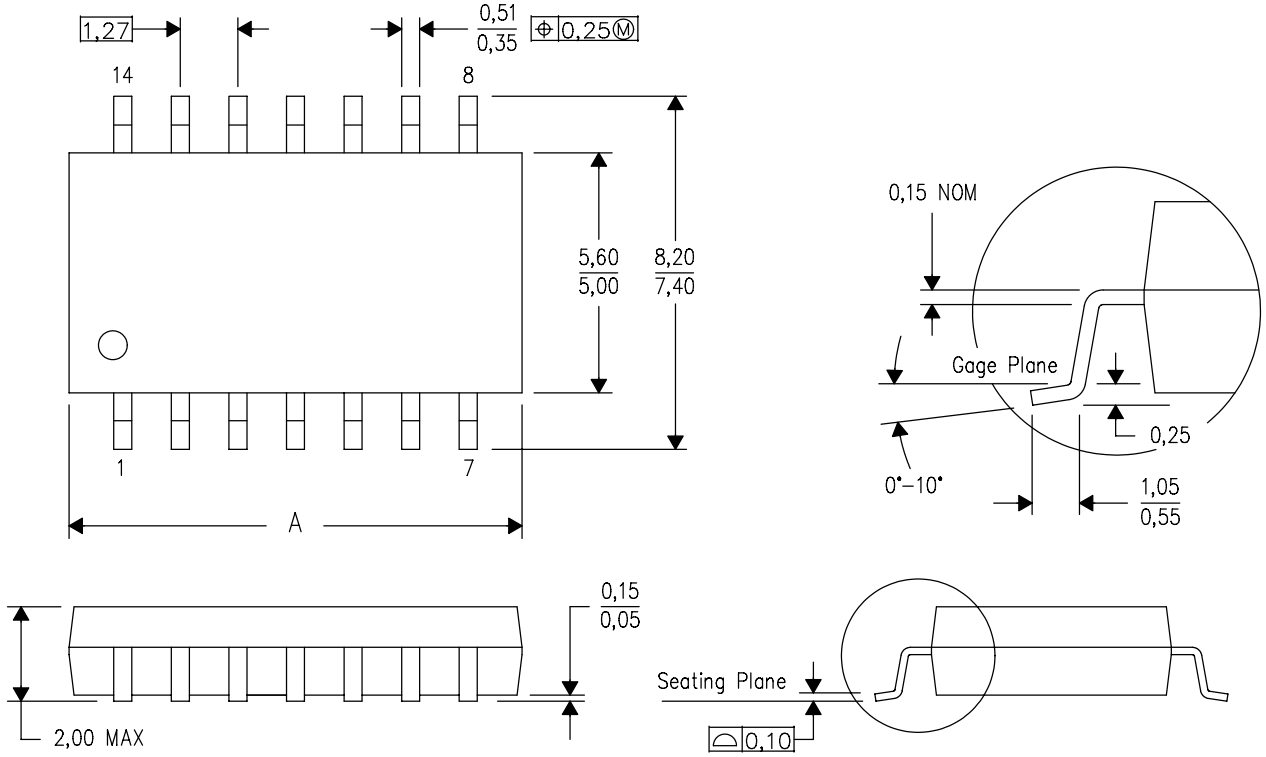

DIM \ PINS **	14	16	20	24
A MAX	10,50	10,50	12,90	15,30
A MIN	9,90	9,90	12,30	14,70

4040062/C 03/03

NOTES:
A. All linear dimensions are in millimeters.
B. This drawing is subject to change without notice.
C. Body dimensions do not include mold flash or protrusion, not to exceed 0,15.

重要なお知らせと免責事項

TI は、技術データと信頼性データ (データシートを含みます)、設計リソース (リファレンス・デザインを含みます)、アプリケーションや設計に関する各種アドバイス、Web ツール、安全性情報、その他のリソースを、欠陥が存在する可能性のある「現状のまま」提供しており、商品性および特定目的に対する適合性の黙示保証、第三者の知的財産権の非侵害保証を含むいかなる保証も、明示的または黙示的にかかわらず拒否します。

これらのリソースは、TI 製品を使用する設計の経験を積んだ開発者への提供を意図したものです。(1) お客様のアプリケーションに適した TI 製品の選定、(2) お客様のアプリケーションの設計、検証、試験、(3) お客様のアプリケーションに該当する各種規格や、その他のあらゆる安全性、セキュリティ、規制、または他の要件への確実な適合に関する責任を、お客様のみが単独で負うものとします。

上記の各種リソースは、予告なく変更される可能性があります。これらのリソースは、リソースで説明されている TI 製品を使用するアプリケーションの開発の目的でのみ、TI はその使用をお客様に許諾します。これらのリソースに関して、他の目的で複製することや掲載することは禁止されています。TI や第三者の知的財産権のライセンスが付与されている訳ではありません。お客様は、これらのリソースを自身で使用した結果発生するあらゆる申し立て、損害、費用、損失、責任について、TI およびその代理人を完全に補償するものとし、TI は一切の責任を拒否します。

TI の製品は、TI の販売条件、または ti.com やかかる TI 製品の関連資料などのいずれかを通じて提供する適用可能な条項の下で提供されています。TI がこれらのリソースを提供することは、適用される TI の保証または他の保証の放棄の拡大や変更を意味するものではありません。

お客様がいかなる追加条項または代替条項を提案した場合でも、TI はそれらに異議を唱え、拒否します。

郵送先住所：Texas Instruments, Post Office Box 655303, Dallas, Texas 75265
Copyright © 2024, Texas Instruments Incorporated