TS3USB221 シングル イネーブル付きの High-Speed USB 2.0 (480Mbps) 1:2 マルチプレクサ/デマルチプレクサ スイッチ

1 特長

- 2.3V および 3.6V の V_{CC} で動作
- $V_{I/O}$ は最大 5.5V の信号に対応
- 1.8V 互換の制御ピン入力
- $\overline{OE}$ がディセーブルのとき低消費電力モード (1μA)
- R_{ON} = 6ω (最大値)
- δr_{ON} = 0.2ω (標準値)
- $C_{IO(ON)}$ = 6pf (最大値)
- 低消費電力 (最大 30μA)
- 人体モデル (HBM) で 2000V 超の ESD
- 高帯域幅:1GHz (標準値)

2 アプリケーション

- USB 1.0、1.1、2.0 の信号ルーティング
- モバイル産業用プロセッサ インターフェイス (MIPI™) の信号配線
- MHL 1.0

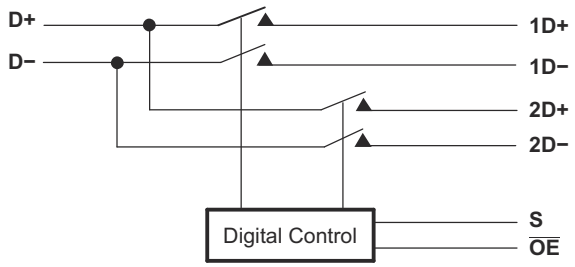

ブロック図

3 概要

TS3USB221 は、USB I/O 数が限られたハブまたはコントローラを備えたハンドセットおよび民生アプリケーション (例:携帯電話、デジタル カメラ、ノート PC) での High-Speed USB 2.0 信号のスイッチングに特化して設計された高帯域幅スイッチです。このスイッチは帯域幅が広く (1.1GHz)、エッジと位相の歪みを最小限に抑えて信号を通過させることができます。このデバイスは、USB ホスト デバイスからの差動出力を、対応する 2 つの出力のどちらかに多重化します。このスイッチは双方向であり、出力での高速信号の減衰は全くないか、あってもわずかです。TS3USB221 は、ビット間のスキューが小さく、チャネル間のノイズ分離が大きくなるよう設計されています。また、TS3USB221 は High-Speed USB 2.0 (480Mbps) などの各種規格に適合しています。

パッケージ情報

部品番号	パッケージ(1)	パッケージ サイズ(2)
TS3USB221	DRC (VSON、10)	3mm × 3mm
	RSE (UQFN、10)	2mm × 1.5mm

(1) 供給されているすべてのパッケージについては、セクション 11 を参照してください。
(2) パッケージ サイズ (長さ × 幅) は公称値であり、該当する場合はピンも含まれます。

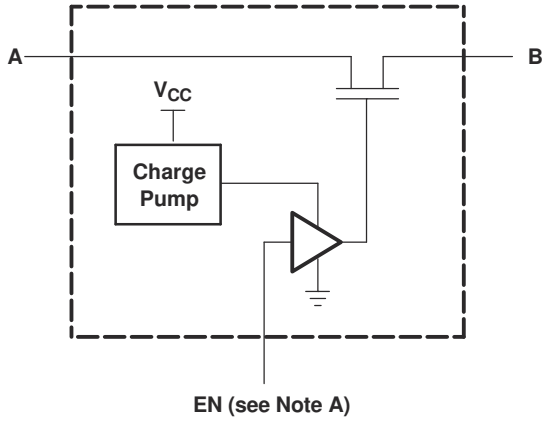

A. EN はスイッチに印加される内部イネーブル信号

概略回路図、各 FET スイッチ (SW)

このリソースの元の言語は英語です。翻訳は概要を便宜的に提供するもので、自動化ツール (機械翻訳) を使用していることがあり、TI では翻訳の正確性および妥当性につきましては一切保証いたしません。実際の設計などの前には、ti.com で必ず最新の英語版をご参照くださいますようお願いいたします。

Table of Contents

1 特長 ... 1
2 アプリケーション ... 1
3 概要 ... 1
4 Pin Configuration and Functions ... 3
5 Specifications ... 4
5.1 Absolute Maximum Ratings ... 4
5.2 ESD Ratings ... 4
5.3 Recommended Operating Conditions ... 4
5.4 Thermal Information ... 5
5.5 Electrical Characteristics ... 5
5.6 Dynamic Electrical Characteristics, V_{CC} = 3.3V ± 10% ... 6
5.7 Dynamic Electrical Characteristics, V_{CC} = 2.5V ± 10% ... 6
5.8 Switching Characteristics, V_{CC} = 3.3V ± 10% ... 6
5.9 Switching Characteristics, V_{CC} = 2.5V ± 10% ... 6
5.10 Typical Characteristics ... 7
6 Parameter Measurement Information ... 8
7 Detailed Description ... 12
7.1 Overview ... 12
7.2 Functional Block Diagram ... 12
7.3 Feature Description ... 12
7.4 Device Functional Modes ... 12
8 Application and Implementation ... 13
8.1 Application Information ... 13
8.2 Typical Application ... 13
8.3 Power Supply Recommendations ... 15
8.4 Layout ... 15
9 Device and Documentation Support ... 17
9.1 Documentation Support ... 17
9.2 ドキュメントの更新通知を受け取る方法 ... 17
9.3 サポート・リソース ... 17
9.4 Trademarks ... 17
9.5 静電気放電に関する注意事項 ... 17
9.6 用語集 ... 17
10 Revision History ... 17
11 Mechanical, Packaging, and Orderable Information ... 18

Copyright © 2024 Texas Instruments Incorporated

4 Pin Configuration and Functions

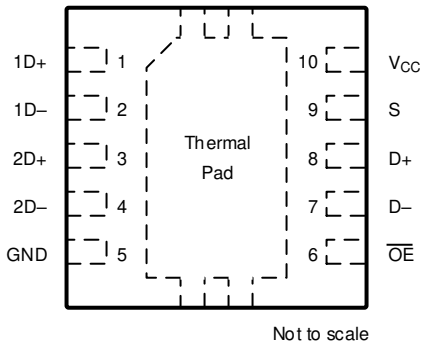

図 4-1. DRC Package, 10-Pin VSON (Top View)

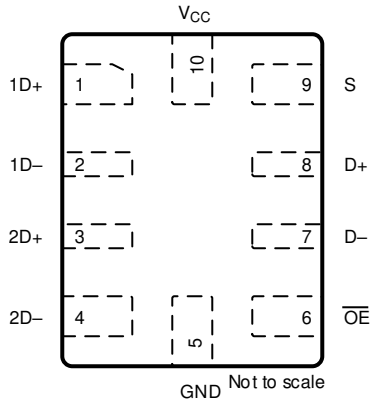

図 4-2. RSE Package, 10-Pin UQFN (Top View)

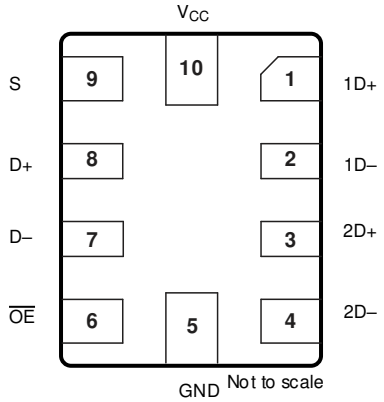

図 4-3. RSE Package, 10-Pin UQFB (Bottom View)

表 4-1. Pin Functions

PIN		TYPE(1)	DESCRIPTION
NAME	NO.		
1D+	1	I/O	USB port 1
1D–	2	I/O	
2D+	3	I/O	USB port 2
2D–	4	I/O	
GND	5	—	Ground
$\overline{OE}$	6	I	Bus-switch enable
D–	7	I/O	Common USB port
D+	8	I/O	
S	9	I	Select input
V_{CC}	10	—	Supply voltage

(1) I = input, O = output

5 Specifications

5.1 Absolute Maximum Ratings

over operating free-air temperature range (unless otherwise noted)[1]

			MIN	MAX	UNIT
V_{CC}	Supply voltage		–0.5	4.6	V
V_{IN}	Control input voltage[2] [3]		–0.5	7	V
$V_{I/O}$	Switch I/O voltage[2] [3] [4] [6]		–0.5	7	V
I_{IK}	Control input clamp current	V_{IN} < 0		–50	mA
$I_{I/OK}$	I/O port clamp current	$V_{I/O}$ < 0		–50	mA
$I_{I/O}$	ON-state switch current[5]			±120	mA
	Continuous current through V_{CC} or GND			±100	mA
T_{stg}	Storage temperature		–65	150	°C

(1) Operation outside the *Absolute Maximum Ratings* may cause permanent device damage. *Absolute Maximum Ratings* do not imply functional operation of the device at these or any other conditions beyond those listed under *Recommended Operating Conditions*. If used outside the *Recommended Operating Conditions* but within the *Absolute Maximum Ratings*, the device may not be fully functional, and this may affect device reliability, functionality, performance, and shorten the device lifetime.
(2) All voltages are with respect to ground, unless otherwise specified.
(3) The input and output voltage ratings may be exceeded if the input and output clamp-current ratings are observed.
(4) V_I and V_O are used to denote specific conditions for $V_{I/O}$.
(5) I_I and I_O are used to denote specific conditions for $I_{I/O}$.
(6) The I/O pins are 5.5V tolerant and functional for the entire range. However, for $V^{I/O}$ > 3.6V, the channel RON is high (up to 100Ω).

5.2 ESD Ratings

			VALUE	UNIT
$V_{(ESD)}$	Electrostatic discharge	Human-body model (HBM), per ANSI/ESDA/JEDEC JS-001 [1]	±2000	V
		Charged-device model (CDM), per ANSI/ESDA/JEDEC JS-002 [2]	±1500	V

(1) JEDEC document JEP155 states that 500V HBM allows safe manufacturing with a standard ESD control process.
(2) JEDEC document JEP157 states that 250V CDM allows safe manufacturing with a standard ESD control process.

5.3 Recommended Operating Conditions

See [1].

			MIN	MAX	UNIT
V_{CC}	Supply voltage		2.3	3.6	V
V_{IH}	High-level control input voltage	V_{CC} = 2.3V to 2.7V	0.46 × V_{CC}	V_{CC}	V
		V_{CC} = 2.7V to 3.6V			
V_{IL}	Low-level control input voltage	V_{CC} = 2.3V to 2.7V	0	0.25 × V_{CC}	V
		V_{CC} = 2.7V to 3.6V			
$V_{I/O}$	Data input/output voltage		0	5.5	V
T_A	Operating free-air temperature		–40	85	°C

(1) All unused control inputs of the device must be held at V_{CC} or GND to ensure proper device operation. Refer to the *Implications of Slow or Floating CMOS Inputs* application note.

Copyright © 2024 Texas Instruments Incorporated

5.4 Thermal Information

THERMAL METRIC[1]		TS3USB221		UNIT
		DRC (VSON)	RSE (UQFN)	
		10 PINS	10 PINS	
$R_{\theta JA}$	Junction-to-ambient thermal resistance	57.7	204.8	°C/W
$R_{\theta JC(top)}$	Junction-to-case (top) thermal resistance	87.7	118.1	
$R_{\theta JB}$	Junction-to-board thermal resistance	32.6	121.5	
ψ_{JT}	Junction-to-top characterization parameter	8.2	13.9	
ψ_{JB}	Junction-to-board characterization parameter	32.8	121.2	
$R_{\theta JC(bot)}$	Junction-to-case (bottom) thermal resistance	18.5	N/A	

(1) For more information about traditional and new thermal metrics, see the *Semiconductor and IC Package Thermal Metrics* application note.

5.5 Electrical Characteristics

over operating free-air temperature range (unless otherwise noted)[1]

PARAMETER		TEST CONDITIONS			MIN	TYP[2]	MAX	UNIT
V_{IK}		V_{CC} = 3.6V, 2.7V,	I_I = –18mA		–1.8			V
I_{IN}	Control inputs	V_{CC} = 3.6V, 2.7V, 0V,	V_{IN} = 0V to 3.6V				±1	µA
I_{OZ} [3]		V_{CC} = 3.6V, 2.7V, V_O = 0V to 3.6V, V_I = 0V,	V_{IN} = V_{CC} or GND, Switch OFF				±1	µA
I_{OFF}		V_{CC} = 0V	$V_{I/O}$ = 0V to 3.6V				±2	µA
			$V_{I/O}$ = 0V to 2.7V				±1	
I_{CC}		V_{CC} = 3.6V, 2.7V, V_{IN} = V_{CC} or GND,	$I_{I/O}$ = 0V, Switch ON or OFF				30	µA
I_{CC} (low power mode)		V_{CC} = 3.6V, 2.7V, V_{IN} = V_{CC} or GND	Switch disabled ($\overline{OE}$ in high state)				1	µA
ΔI_{CC} [4]	Control inputs	One input at 1.8V, Other inputs at V_{CC} or GND	V_{CC} = 3.6V				20	µA
			V_{CC} = 2.7V				0.5	
C_{in}	Control inputs	V_{CC} = 3.3V, 2.5V,	V_{IN} = 3.3V or 0V			1	2	pF
$C_{io(OFF)}$		V_{CC} = 3.3V, 2.5V,	$V_{I/O}$ = 3.3V or 0V,	Switch OFF		3	4	pF
$C_{io(ON)}$		V_{CC} = 3.3V, 2.5V,	$V_{I/O}$ = 3.3V or 0V,	Switch ON		5	6	pF
r_{on} [5]		V_{CC} = 3V, 2.3V	V_I = 0V,	I_O = 30mA			6	Ω
			V_I = 2.4V,	I_O = –15mA			6	
Δr_{on}		V_{CC} = 3V, 2.3V	V_I = 0V,	I_O = 30mA		0.2		Ω
			V_I = 1.7,	I_O = –15mA		0.2		
$r_{on(flat)}$		V_{CC} = 3V, 2.3V	V_I = 0V,	I_O = 30mA		1		Ω
			V_I = 1.7,	I_O = –15mA		1		

(1) V_{IN} and I_{IN} refer to control inputs. V_I, V_O, I_I, and I_O refer to data pins.
(2) All typical values are at V_{CC} = 3.3V (unless otherwise noted), T_A = 25°C.
(3) For I/O ports, the parameter I_{OZ} includes the input leakage current.
(4) This is the increase in supply current for each input that is at the specified TTL voltage level, rather than V_{CC} or GND.
(5) Measured by the voltage drop between the A and B terminals at the indicated current through the switch. ON-state resistance is determined by the lower of the voltages of the two (A or B) terminals.

5.6 Dynamic Electrical Characteristics, V_{CC} = 3.3V ± 10%

over operating range, T_A = –40°C to 85°C, V_{CC} = 3.3V ± 10%, GND = 0V

PARAMETER		TEST CONDITIONS	TYP(1)	UNIT
X_{TALK}	Crosstalk	R_L = 50Ω, f = 250MHz	–40	dB
O_{IRR}	OFF isolation	R_L = 50Ω, f = 250MHz	–41	dB
BW	Bandwidth (–3dB)	R_L = 50Ω	1.1	GHz

(1) For Maximum or Minimum conditions, use the appropriate value specified under *Electrical Characteristics* for the applicable device type.

5.7 Dynamic Electrical Characteristics, V_{CC} = 2.5V ± 10%

over operating range, T_A = –40°C to 85°C, V_{CC} = 2.5V ± 10%, GND = 0V

PARAMETER		TEST CONDITIONS	TYP(1)	UNIT
X_{TALK}	Crosstalk	R_L = 50Ω, f = 250MHz	–39	dB
O_{IRR}	OFF isolation	R_L = 50Ω, f = 250MHz	–40	dB
BW	Bandwidth (–3dB)	R_L = 50Ω	1.1	GHz

(1) For maximum or minimum conditions, use the appropriate value specified under *Electrical Characteristics* for the applicable device type.

5.8 Switching Characteristics, V_{CC} = 3.3V ± 10%

over operating range, T_A = –40°C to 85°C, V_{CC} = 3.3V ± 10%, GND = 0V

PARAMETER			MIN	TYP(1)	MAX	UNIT
t_{pd}	Propagation delay(2) (3)			0.25		ns
t_{ON}	Line enable time	S to D, nD			30	ns
		$\overline{OE}$ to D, nD			17	
t_{OFF}	Line disable time	S to D, nD			12	ns
		$\overline{OE}$ to D, nD			10	
$t_{SK(O)}$	Output skew between center port to any other port(2)			0.1	0.2	ns
$t_{SK(P)}$	Skew between opposite transitions of the same output (t_{PHL} – t_{PLH})(2)			0.1	0.2	ns

(1) For maximum or minimum conditions, use the appropriate value specified under *Electrical Characteristics* for the applicable device type.
(2) Specified by design
(3) The bus switch contributes no propagational delay other than the RC delay of the on resistance of the switch and the load capacitance. The time constant for the switch alone is of the order of 0.25ns for 10pF load. This time constant adds very little propagational delay to the system because the time is much smaller than the rise/fall times of typical driving signals. Propagational delay of the bus switch, when used in a system, is determined by the driving circuit on the driving side of the switch and the switch interactions with the load on the driven side.

5.9 Switching Characteristics, V_{CC} = 2.5V ± 10%

over operating range, T_A = –40°C to 85°C, V_{CC} = 2.5V ± 10%, GND = 0V

PARAMETER			MIN	TYP(1)	MAX	UNIT
t_{pd}	Propagation delay(2) (3)			0.25		ns
t_{ON}	Line enable time	S to D, nD			50	ns
		$\overline{OE}$ to D, nD			32	
t_{OFF}	Line disable time	S to D, nD			23	ns
		$\overline{OE}$ to D, nD			12	
$t_{SK(O)}$	Output skew between center port to any other port(2)			0.1	0.2	ns
$t_{SK(P)}$	Skew between opposite transitions of the same output (t_{PHL} – t_{PLH})(2)			0.1	0.2	ns

(1) For maximum or minimum conditions, use the appropriate value specified under *Electrical Characteristics* for the applicable device type.
(2) Specified by design

Copyright © 2024 Texas Instruments Incorporated

(3) The bus switch contributes no propagational delay other than the RC delay of the on resistance of the switch and the load capacitance. The time constant for the switch alone is of the order of 0.25ns for 10pF load. The time constraint adds very little propagational delay to the system because the time is much smaller than the rise and fall times of typical driving signals. Propagational delay of the bus switch, when used in a system, is determined by the driving circuit on the driving side of the switch and the switch interactions with the load on the driven side.

5.10 Typical Characteristics

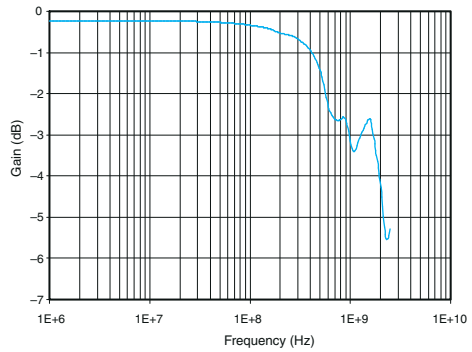

図 5-1. Gain vs Frequency

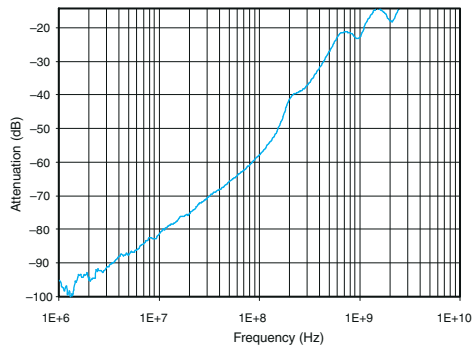

図 5-2. OFF Isolation vs Frequency

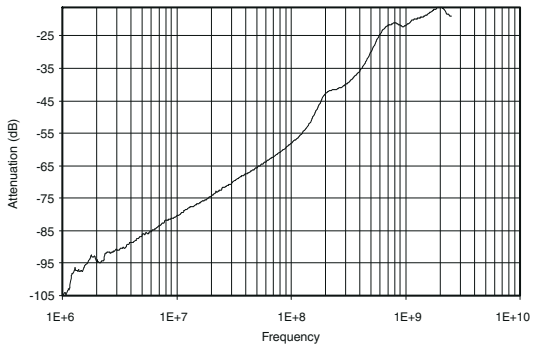

図 5-3. Crosstalk vs Frequency

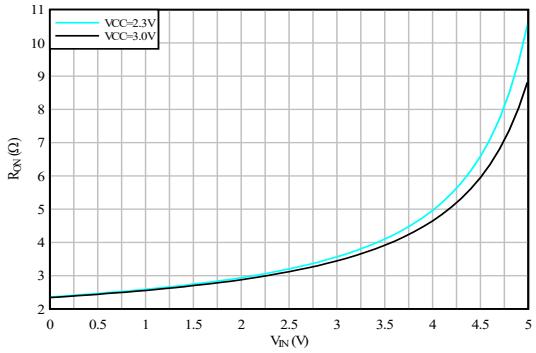

図 5-4. R_{on} vs V_{IN} (I_{OUT} = –30 mA)

6 Parameter Measurement Information

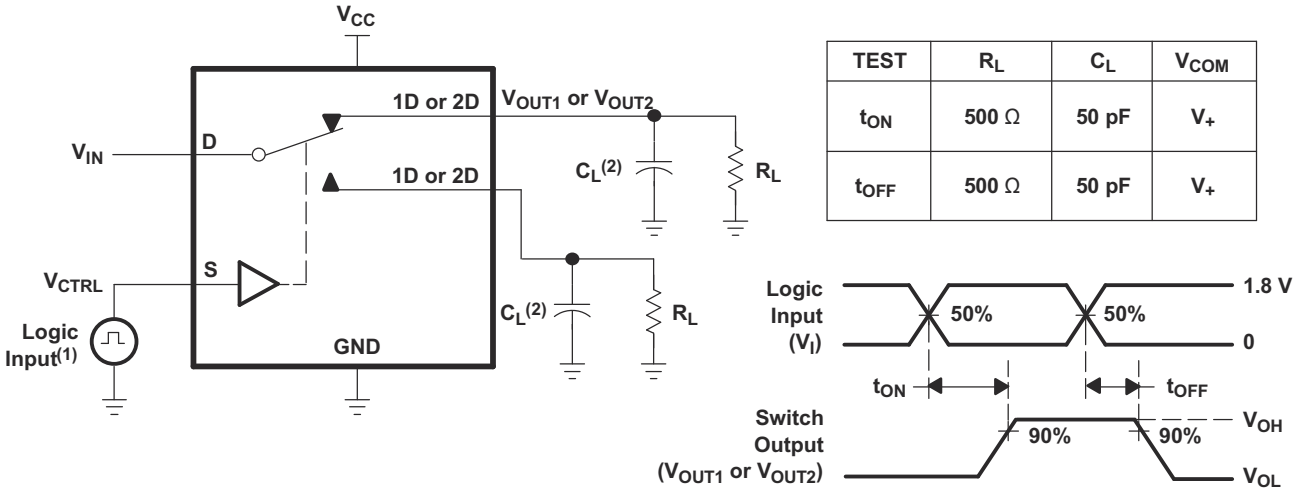

TEST	R_L	C_L	V_{COM}
t_{ON}	500 Ω	50 pF	V_+
t_{OFF}	500 Ω	50 pF	V_+

(1) All input pulses are supplied by generators having the following characteristics: PRR≤ 10 MHz, Z_O = 50 Ω, t_r < 5 ns, t_f < 5 ns.
(2) C_L includes probe and jig capacitance.

図 6-1. Turnon (t_{ON}) and Turnoff Time (t_{OFF})

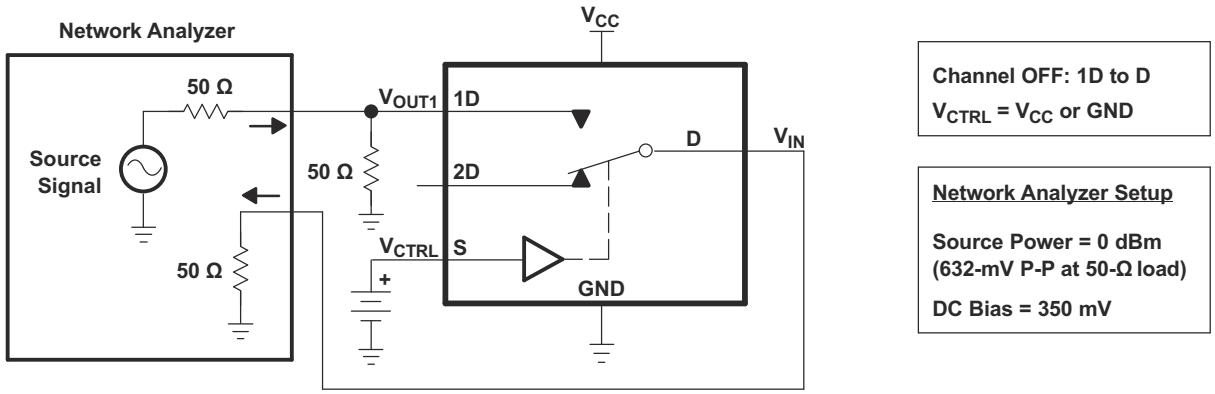

図 6-2. OFF Isolation (O_{ISO})

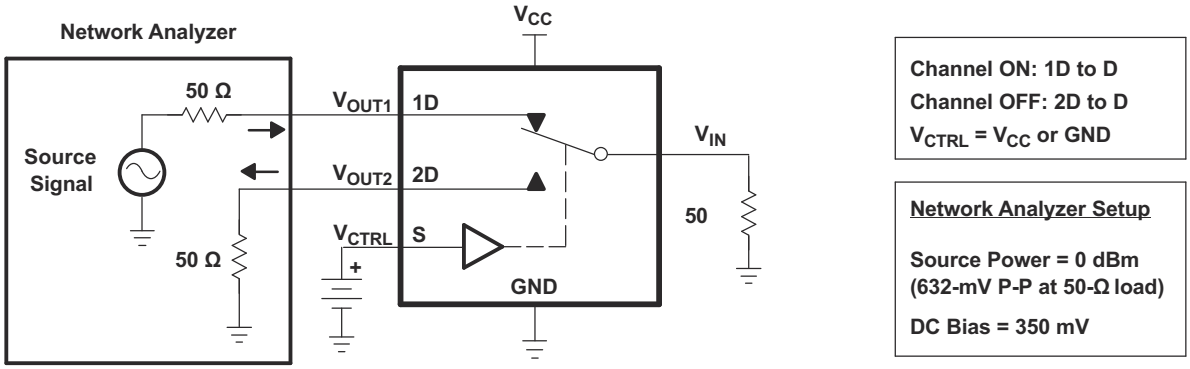

図 6-3. Crosstalk (X_{TALK})

Copyright © 2024 Texas Instruments Incorporated

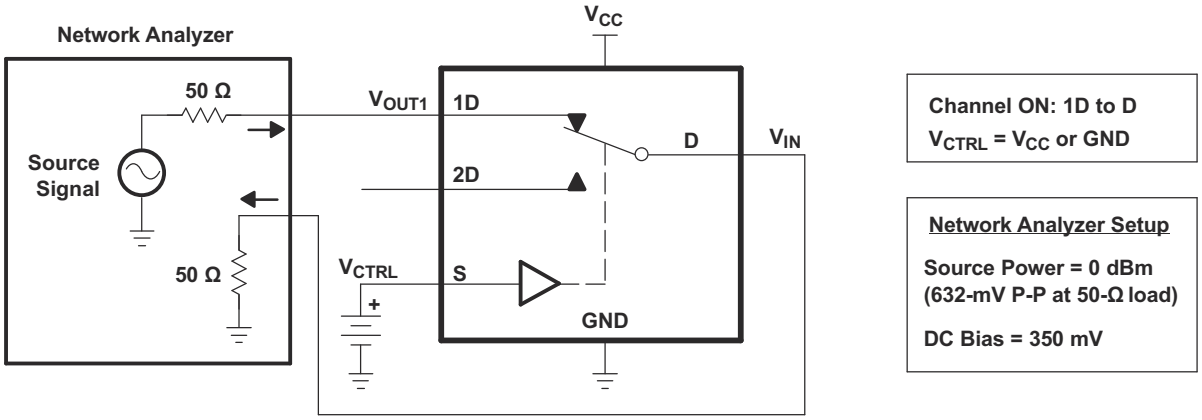

図 6-4. Bandwidth (BW)

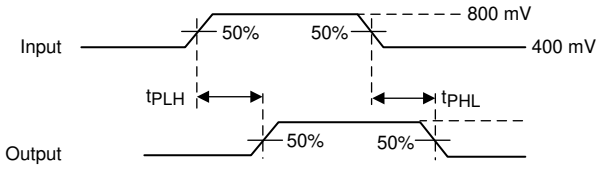

図 6-5. Propagation Delay

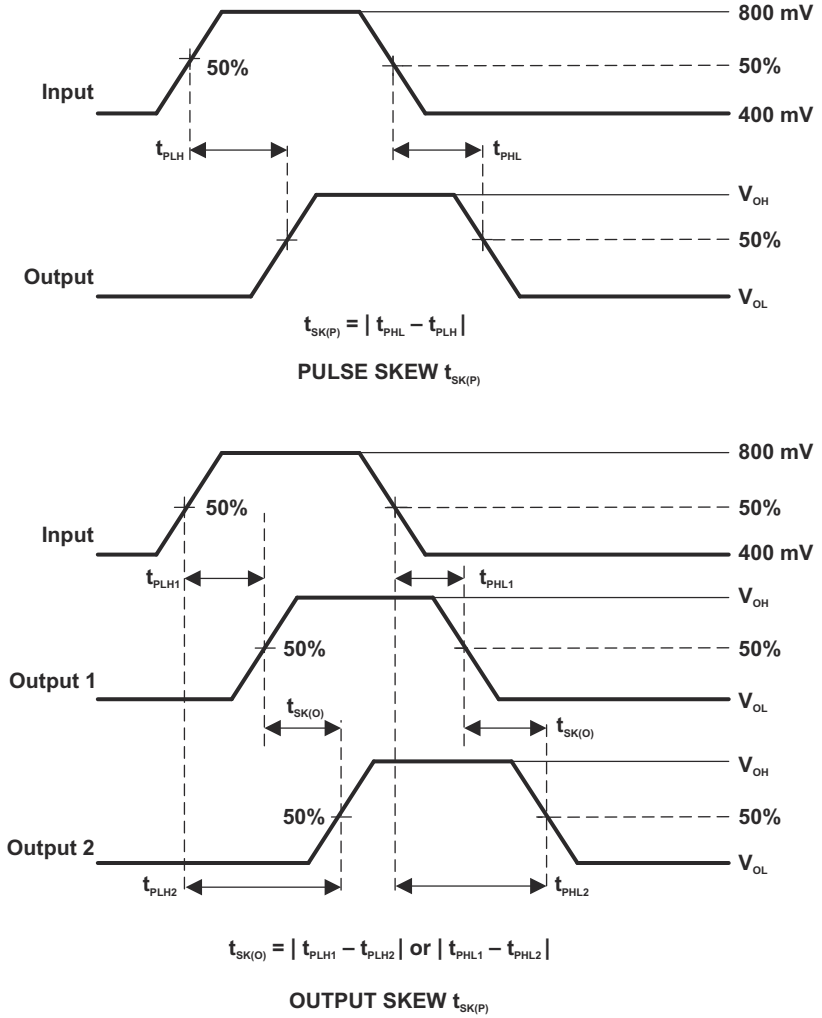

図 6-6. Skew Test

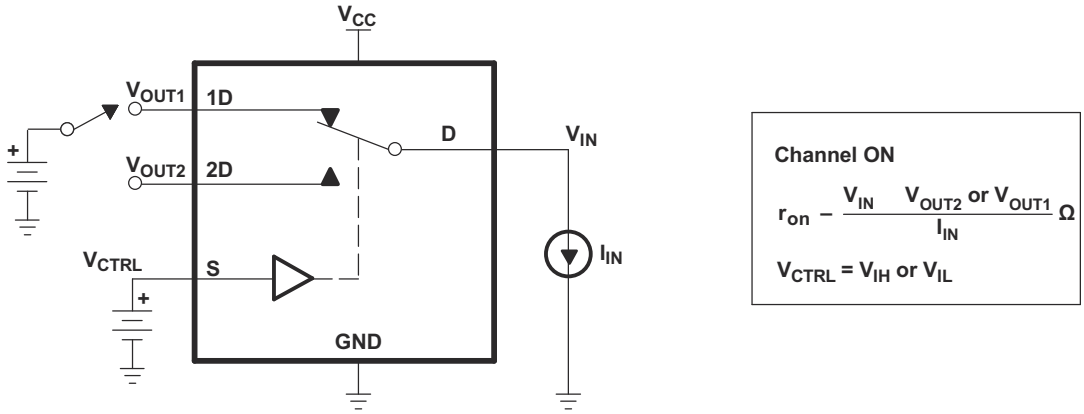

図 6-7. ON-State Resistance (r_{on})

Copyright © 2024 Texas Instruments Incorporated

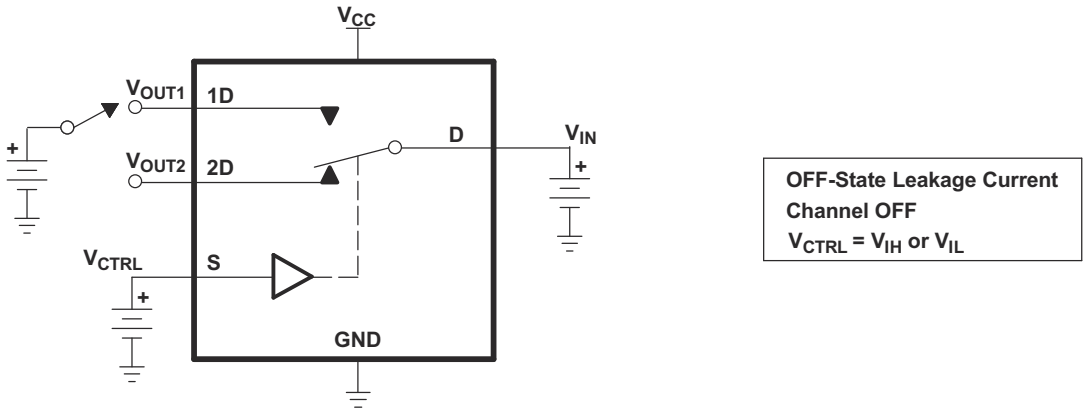

図 6-8. OFF-State Leakage Current

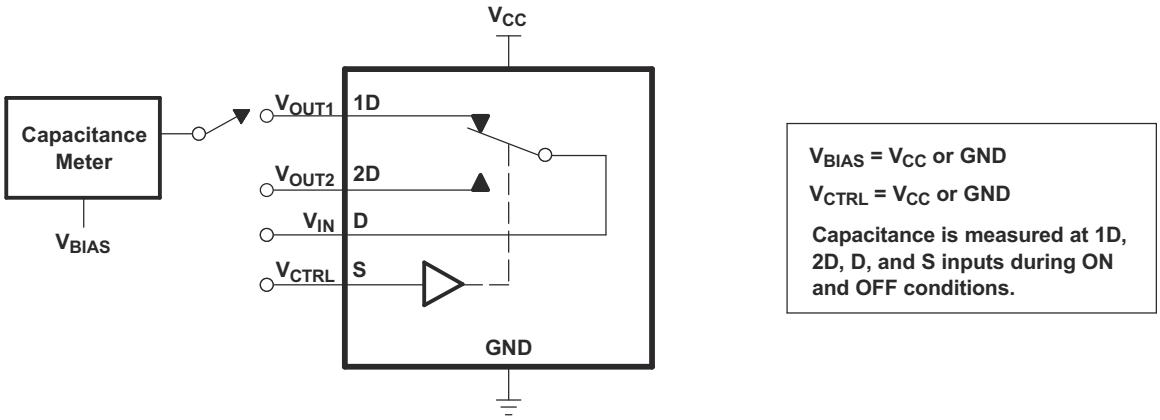

図 6-9. Capacitance

7 Detailed Description

7.1 Overview

The TS3USB221 device is a 2-channel SPDT switch specially designed for the switching of high-speed USB 2.0 signals in handset and consumer applications, such as cell phones, digital cameras, and notebooks with hubs or controllers with limited USB I/Os. The wide bandwidth (1GHz) of this switch allows signals to pass with minimum edge and phase distortion. The device multiplexes differential outputs from a USB host device to one of two corresponding outputs. The switch is bidirectional and offers little or no attenuation of the high-speed signals at the outputs. The device also has a low power mode that reduces the power consumption to 1 µA for portable applications with a battery or limited power budget.

The device is designed for low bit-to-bit skew and high channel-to-channel noise isolation, and is compatible with various standards, such as high-speed USB 2.0 (480Mbps).

The TS3USB221 device integrates ESD protection cells on all pins, is available in a SON package (3mm × 3mm) as well as in a tiny µQFN package (2mm × 1.5mm) and is characterized over the free-air temperature range from –40°C to 85°C.

7.2 Functional Block Diagram

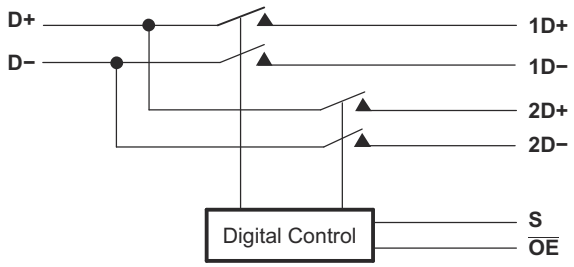

7.3 Feature Description

7.3.1 Low Power Mode

The TS3USB221 has a low power mode that reduces the power consumption to 1 µA when the device is not in use. The bus-switch enable pin $\overline{OE}$ must be supplied with a logic high signal to put the device in low power mode and disable the switch.

7.4 Device Functional Modes

表 7-1. Truth Table

S	$\overline{OE}$	FUNCTION
X	H	Disconnect
L	L	D = 1D
H	L	D = 2D

Copyright © 2024 Texas Instruments Incorporated

8 Application and Implementation

注

以下のアプリケーション情報は、TI の製品仕様に含まれるものではなく、TI ではその正確性または完全性を保証いたしません。個々の目的に対する製品の適合性については、お客様の責任で判断していただくことになります。お客様は自身の設計実装を検証しテストすることで、システムの機能を確認する必要があります。

8.1 Application Information

There are many USB applications in which the USB hubs or controllers have a limited number of USB I/Os. The TS3USB221 can effectively expand the limited USB I/Os by switching between multiple USB buses and interface with the buses on a single USB hub or controller. TS3USB221 can also be used to connect a single controller to two USB connectors.

8.2 Typical Application

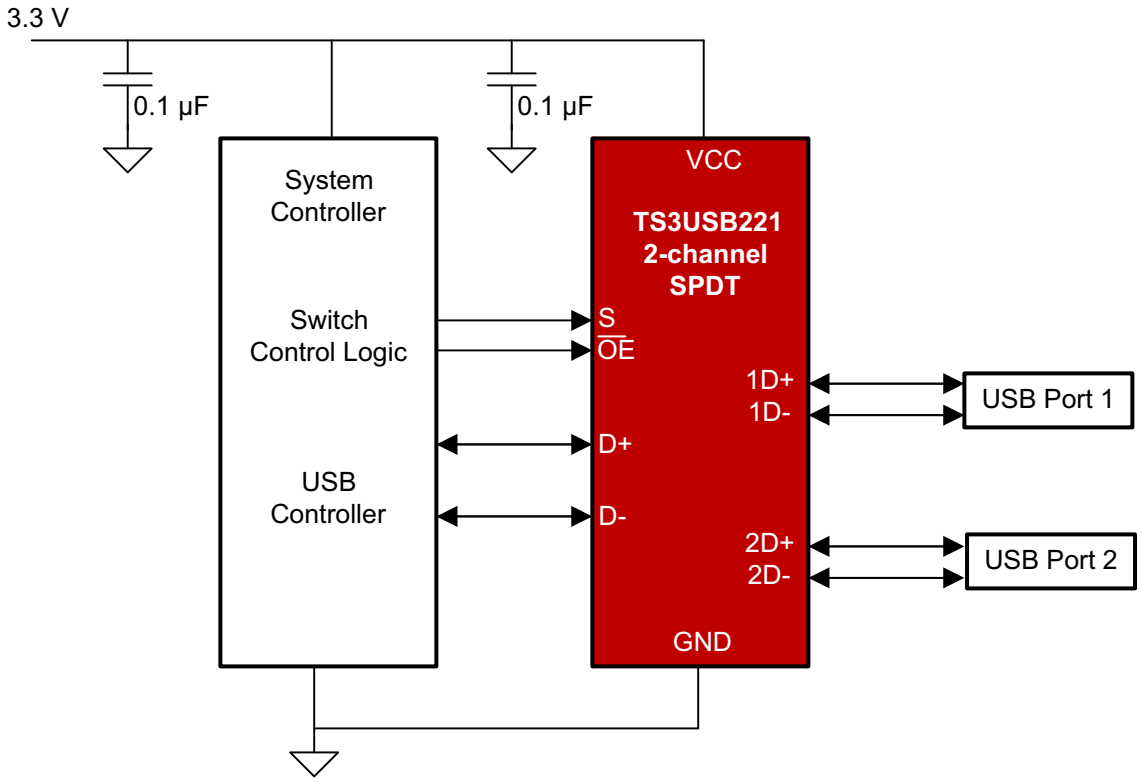

図 8-1. Simplified Schematic

8.2.1 Design Requirements

Follow the design requirements of the USB 1.0, 1.1, and 2.0 standards.

TI recommends that the digital control pins S and $\overline{OE}$ be pulled up to V_{CC} or down to GND to avoid undesired switch positions that can result from the floating pin.

8.2.2 Detailed Design Procedure

The TS3USB221 can operate properly without any external components. However, TI recommends to connect unused pinsto ground through a 50Ω resistor to prevent signal reflections back into the device.

8.2.3 Application Curves

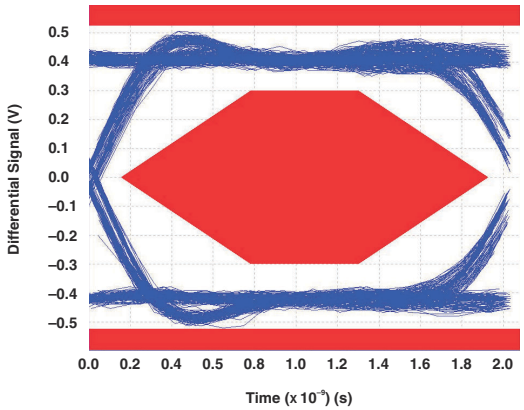

図 8-2. Eye Pattern: 480Mbps USB Signal With No Switch (Through Path)

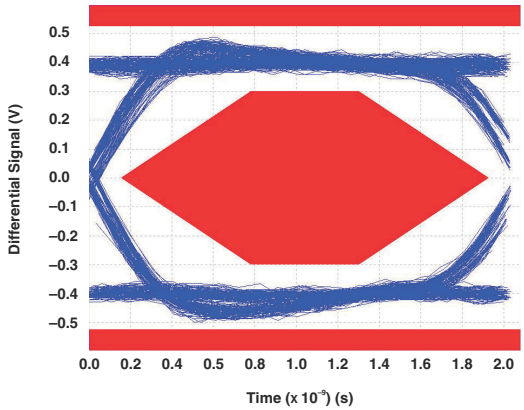

図 8-3. Eye Pattern: 480Mbps USB Signal With Switch NC Path

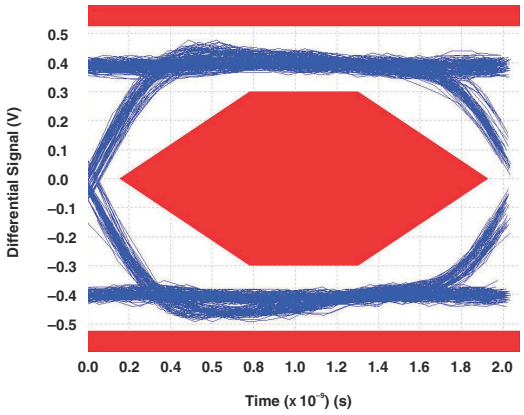

図 8-4. Eye Pattern: 480Mbps USB Signal With Switch NO Path

Copyright © 2024 Texas Instruments Incorporated

8.3 Power Supply Recommendations

Make sure the power to the device is supplied through the V_{CC} pin and follows the USB 1.0, 1.1, and 2.0 standards. TI recommends placing a bypass capacitor as close as possible to the supply pin V_{CC} to help smooth out lower frequency noise to provide better load regulation across the frequency spectrum.

8.4 Layout

8.4.1 Layout Guidelines

Place supply bypass capacitors as close to V_{CC} pin as possible. Avoid placing the bypass caps near the D+/D– traces.

Make sure the high-speed D+/D– trace lengths match and are no more than 4 inches, otherwise the eye diagram performance can degrade. A high-speed USB connection is made through a shielded, twisted pair cable with a differential characteristic impedance. In the layout, make sure the impedance of D+ and D– traces match the cable characteristic differential impedance for optimal performance.

Route the high-speed USB signals using a minimum of vias and corners to reduce signal reflections and impedance changes. When a via must be used, increase the clearance size around the via to minimize the capacitance. Each via introduces discontinuities in the transmission line of the signal and increases the chance of picking up interference from the other layers of the board. Be careful when designing test points on twisted pair lines; through-hole pins are not recommended.

When it becomes necessary to turn 90°, use two 45° turns or an arc instead of making a single 90° turn. This reduces reflections on the signal traces by minimizing impedance discontinuities.

Do not route USB traces under or near crystals, oscillators, clock signal generators, switching regulators, mounting holes, magnetic devices or ICs that use or duplicate clock signals.

Avoid stubs on the high-speed USB signals because stubs cause signal reflections. If a stub is unavoidable, keep the stub less than 200mm.

Route all high-speed USB signal traces over continuous planes (V_{CC} or GND), with no interruptions.

Avoid crossing over anti-etch, commonly found with plane splits.

A printed circuit board with at least four layers is recommended because of high frequencies associated with the USB; two signal layers separated by a ground and power layer as shown in 図 8-5.

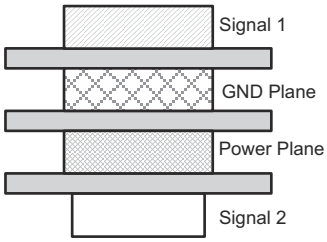

図 8-5. Four-Layer Board Stack-Up

Make sure the majority of signal traces run on a single layer, preferably Signal 1. Make sure the GND plane, which is solid with no cuts, is immediately next to this layer. Avoid running signal traces across a split in the ground or power plane. When running across split planes is unavoidable, sufficient decoupling must be used. Minimizing the number of signal vias reduces EMI by reducing inductance at high frequencies. For more information on layout guidelines, see *High Speed Layout Guidelines* and *USB 2.0 Board Design and Layout Guidelines* .

8.4.2 Layout Example

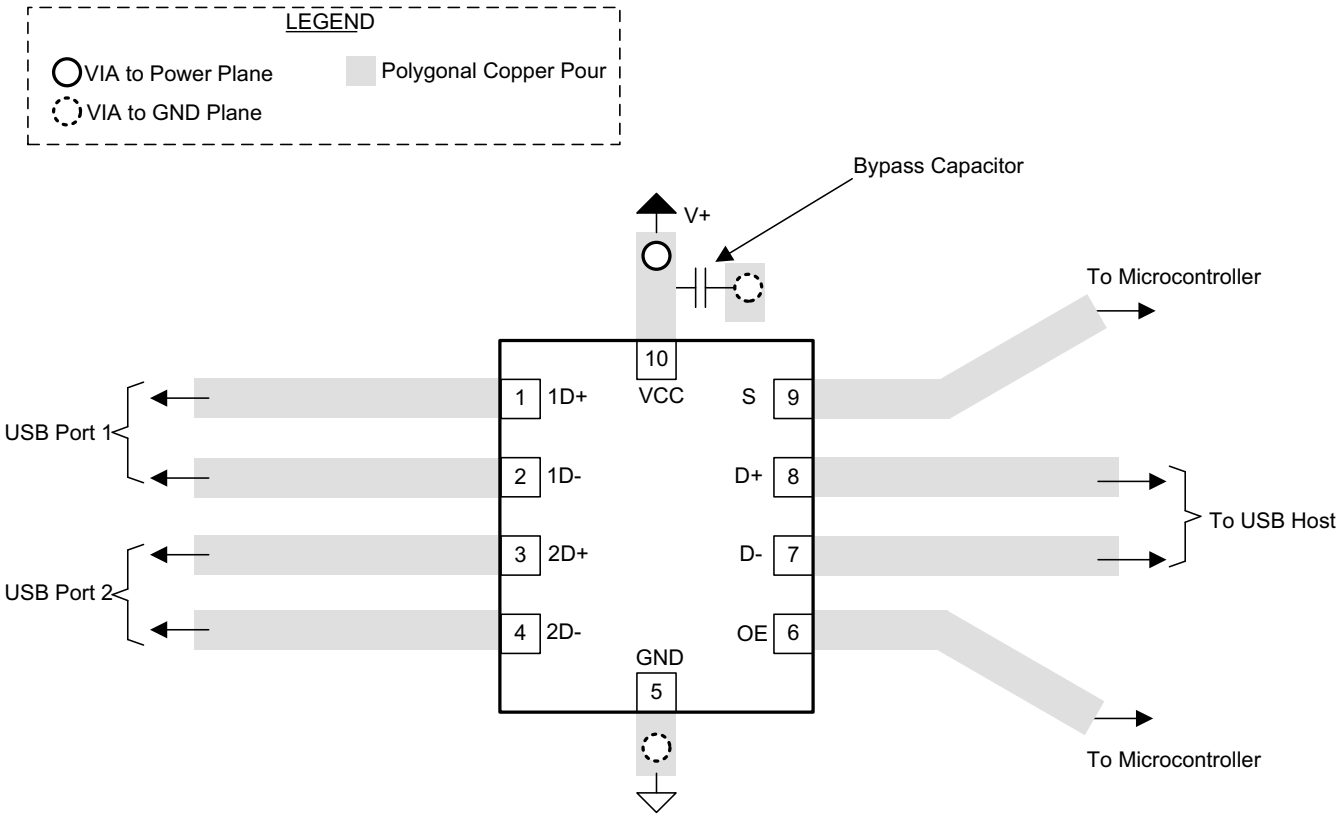

図 8-6. Package Layout Diagram

Copyright © 2024 Texas Instruments Incorporated

9 Device and Documentation Support

9.1 Documentation Support

9.1.1 Related Documentation

For related documentation, see the following:

- Texas Instruments, *High Speed Layout Guidelines*
- Texas Instruments, *USB 2.0 Board Design and Layout Guidelines*
- Texas Instruments, *Implications of Slow or Floating CMOS Inputs* application note

9.2 ドキュメントの更新通知を受け取る方法

ドキュメントの更新についての通知を受け取るには、www.tij.co.jp のデバイス製品フォルダを開いてください。[通知] をクリックして登録すると、変更されたすべての製品情報に関するダイジェストを毎週受け取ることができます。変更の詳細については、改訂されたドキュメントに含まれている改訂履歴をご覧ください。

9.3 サポート・リソース

テキサス・インスツルメンツ E2E™ サポート・フォーラムは、エンジニアが検証済みの回答と設計に関するヒントをエキスパートから迅速かつ直接得ることができる場所です。既存の回答を検索したり、独自の質問をしたりすることで、設計で必要な支援を迅速に得ることができます。

リンクされているコンテンツは、各寄稿者により「現状のまま」提供されるものです。これらはテキサス・インスツルメンツの仕様を構成するものではなく、必ずしもテキサス・インスツルメンツの見解を反映したものではありません。テキサス・インスツルメンツの使用条件を参照してください。

9.4 Trademarks

MIPI™ is a trademark of Mobile Industry Processor Interface Alliance.
テキサス・インスツルメンツ E2E™ is a trademark of Texas Instruments.
すべての商標は、それぞれの所有者に帰属します。

9.5 静電気放電に関する注意事項

この IC は、ESD によって破損する可能性があります。テキサス・インスツルメンツは、IC を取り扱う際には常に適切な注意を払うことを推奨します。正しい取り扱いおよび設置手順に従わない場合、デバイスを破損するおそれがあります。

ESD による破損は、わずかな性能低下からデバイスの完全な故障まで多岐にわたります。精密な IC の場合、パラメータがわずかに変化するだけで公表されている仕様から外れる可能性があるため、破損が発生しやすくなっています。

9.6 用語集

テキサス・インスツルメンツ用語集　　この用語集には、用語や略語の一覧および定義が記載されています。

10 Revision History

資料番号末尾の英字は改訂を表しています。その改訂履歴は英語版に準じています。

Changes from Revision J (January 2019) to Revision K (July 2024) **Page**

- ドキュメント全体にわたって表、図、相互参照の採番方法を更新 1
- 帯域幅の標準値を次のように変更：1.1GHz から 1GHz 1
- Added footnote to the $V_{I/O}$ parameter in the *Absolute Maximum Ratings* table 4
- Changed CDM test conditions in the *ESD Ratings* table from: per JEDEC specification JESD22-C101 to: per ANSI/ESDA/JEDEC JS-002 4
- Changed RSE (UQFN) junction-to-ambient thermal resistance value from: 169.8°C/W to: 204.8°C/W 5
- Changed RSE (UQFN) junction-to-case (top) thermal resistance value from: 84.7°C/W to: 118.1°C/W 5
- Changed RSE (UQFN) junction-to-board thermal resistance value from: 94.9°C/W to: 121.5°C/W 5
- Changed RSE (UQFN) junction-to-top characterization parameter value from: 5.7°C/W to: 13.9°C/W 5
- Changed RSE (UQFN) junction-to-board characterization parameter value from: 94.9°C/W to: 121.2°C/W 5

- Changed the V_{IK} value in the *Electrical Characteristics* table from: –1.8V maximum to: –1.8V minimum..... 5
- Changed the *Typical Characteristics* section.....7

Changes from Revision I (January 2016) to Revision J (January 2019) **Page**

- Added CDM value and table notes to the ESD Ratings.....4

Changes from Revision H (February 2015) to Revision I (January 2016) **Page**

- Changed V_{IH} Max from 5.5 to V_{CC} in *Recommended Operating Conditions* table.....4

Changes from Revision G (September 2010) to Revision H (February 2015) **Page**

- 「特長」の最初の箇条書き項目を「2.5V および 3.3V の V_{CC} で動作」から「2.3V および 3.6V の V_{CC} で動作」に変更 1
- 「ピン構成および機能」セクション、「ESD 定格」表、「機能説明」セクション、「デバイスの機能モード」セクション、「アプリケーションと実装」セクション、「電源に関する推奨事項」セクション、「レイアウト」セクション、「デバイスおよびドキュメントのサポート」セクション、「メカニカル、パッケージ、および注文情報」セクションを追加 1
- 「注文情報」表を削除.....1

11 Mechanical, Packaging, and Orderable Information

The following pages include mechanical, packaging, and orderable information. This information is the most current data available for the designated devices. This data is subject to change without notice and revision of this document. For browser-based versions of this data sheet, refer to the left-hand navigation.

Copyright © 2024 Texas Instruments Incorporated

重要なお知らせと免責事項

テキサス・インスツルメンツは、技術データと信頼性データ (データシートを含みます)、設計リソース (リファレンス デザインを含みます)、アプリケーションや設計に関する各種アドバイス、Web ツール、安全性情報、その他のリソースを、欠陥が存在する可能性のある「現状のまま」提供しており、商品性および特定目的に対する適合性の黙示保証、第三者の知的財産権の非侵害保証を含むいかなる保証も、明示的または黙示的にかかわらず拒否します。

これらのリソースは、テキサス・インスツルメンツ製品を使用する設計の経験を積んだ開発者への提供を意図したものです。(1) お客様のアプリケーションに適した テキサス・インスツルメンツ製品の選定、(2) お客様のアプリケーションの設計、検証、試験、(3) お客様のアプリケーションに該当する各種規格や、その他のあらゆる安全性、セキュリティ、規制、または他の要件への確実な適合に関する責任を、お客様のみが単独で負うものとします。

上記の各種リソースは、予告なく変更される可能性があります。これらのリソースは、リソースで説明されている テキサス・インスツルメンツ製品を使用するアプリケーションの開発の目的でのみ、テキサス・インスツルメンツはその使用をお客様に許諾します。これらのリソースに関して、他の目的で複製することや掲載することは禁止されています。テキサス・インスツルメンツや第三者の知的財産権のライセンスが付与されている訳ではありません。お客様は、これらのリソースを自身で使用した結果発生するあらゆる申し立て、損害、費用、損失、責任について、テキサス・インスツルメンツおよびその代理人を完全に補償するものとし、テキサス・インスツルメンツは一切の責任を拒否します。

テキサス・インスツルメンツの製品は、テキサス・インスツルメンツの販売条件、または ti.com やかかる テキサス・インスツルメンツ製品の関連資料などのいずれかを通じて提供する適用可能な条項の下で提供されています。テキサス・インスツルメンツがこれらのリソースを提供することは、適用される テキサス・インスツルメンツの保証または他の保証の放棄の拡大や変更を意味するものではありません。

お客様がいかなる追加条項または代替条項を提案した場合でも、テキサス・インスツルメンツはそれらに異議を唱え、拒否します。

郵送先住所：Texas Instruments, Post Office Box 655303, Dallas, Texas 75265
Copyright © 2024, Texas Instruments Incorporated

PACKAGING INFORMATION

Orderable Device	Status (1)	Package Type	Package Drawing	Pins	Package Qty	Eco Plan (2)	Lead finish/ Ball material (6)	MSL Peak Temp (3)	Op Temp (°C)	Device Marking (4/5)	Samples
SN080104RSER	ACTIVE	UQFN	RSE	10	3000	RoHS & Green	NIPDAU	Level-1-260C-UNLIM	-40 to 85	(L57, L5H, L5O, L5R, L5V)	Samples
TS3USB221DRCR	ACTIVE	VSON	DRC	10	3000	RoHS & Green	NIPDAU	Level-2-260C-1 YEAR	-40 to 85	ZWG	Samples
TS3USB221DRCRG4	ACTIVE	VSON	DRC	10	3000	RoHS & Green	NIPDAU	Level-2-260C-1 YEAR	-40 to 85	ZWG	Samples
TS3USB221RSER	ACTIVE	UQFN	RSE	10	3000	RoHS & Green	NIPDAU	Level-1-260C-UNLIM	-40 to 85	(L57, L5H, L5O, L5R, L5V)	Samples
TS3USB221RSERG4	ACTIVE	UQFN	RSE	10	3000	RoHS & Green	NIPDAU	Level-1-260C-UNLIM	-40 to 85	(L57, L5H, L5O, L5R, L5V)	Samples

(1) The marketing status values are defined as follows:
ACTIVE: Product device recommended for new designs.
LIFEBUY: TI has announced that the device will be discontinued, and a lifetime-buy period is in effect.
NRND: Not recommended for new designs. Device is in production to support existing customers, but TI does not recommend using this part in a new design.
PREVIEW: Device has been announced but is not in production. Samples may or may not be available.
OBSOLETE: TI has discontinued the production of the device.

(2) **RoHS:** TI defines "RoHS" to mean semiconductor products that are compliant with the current EU RoHS requirements for all 10 RoHS substances, including the requirement that RoHS substance do not exceed 0.1% by weight in homogeneous materials. Where designed to be soldered at high temperatures, "RoHS" products are suitable for use in specified lead-free processes. TI may reference these types of products as "Pb-Free".
RoHS Exempt: TI defines "RoHS Exempt" to mean products that contain lead but are compliant with EU RoHS pursuant to a specific EU RoHS exemption.
Green: TI defines "Green" to mean the content of Chlorine (Cl) and Bromine (Br) based flame retardants meet JS709B low halogen requirements of <=1000ppm threshold. Antimony trioxide based flame retardants must also meet the <=1000ppm threshold requirement.

(3) MSL, Peak Temp. - The Moisture Sensitivity Level rating according to the JEDEC industry standard classifications, and peak solder temperature.

(4) There may be additional marking, which relates to the logo, the lot trace code information, or the environmental category on the device.

(5) Multiple Device Markings will be inside parentheses. Only one Device Marking contained in parentheses and separated by a "~" will appear on a device. If a line is indented then it is a continuation of the previous line and the two combined represent the entire Device Marking for that device.

(6) Lead finish/Ball material - Orderable Devices may have multiple material finish options. Finish options are separated by a vertical ruled line. Lead finish/Ball material values may wrap to two lines if the finish value exceeds the maximum column width.

Important Information and Disclaimer: The information provided on this page represents TI's knowledge and belief as of the date that it is provided. TI bases its knowledge and belief on information provided by third parties, and makes no representation or warranty as to the accuracy of such information. Efforts are underway to better integrate information from third parties. TI has taken and continues to take reasonable steps to provide representative and accurate information but may not have conducted destructive testing or chemical analysis on incoming materials and chemicals. TI and TI suppliers consider certain information to be proprietary, and thus CAS numbers and other limited information may not be available for release.

In no event shall TI's liability arising out of such information exceed the total purchase price of the TI part(s) at issue in this document sold by TI to Customer on an annual basis.

TAPE AND REEL INFORMATION

REEL DIMENSIONS

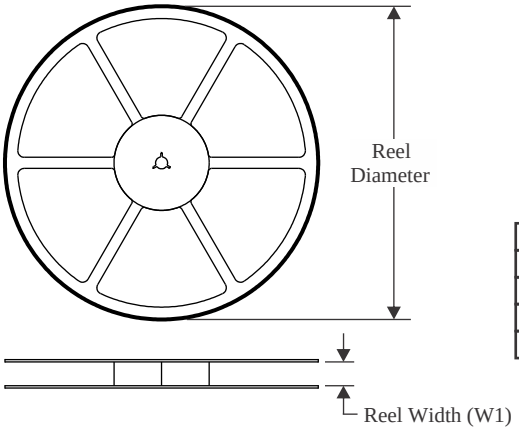

TAPE DIMENSIONS

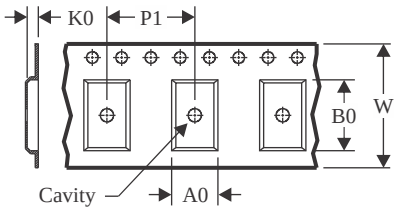

A0	Dimension designed to accommodate the component width
B0	Dimension designed to accommodate the component length
K0	Dimension designed to accommodate the component thickness
W	Overall width of the carrier tape
P1	Pitch between successive cavity centers

QUADRANT ASSIGNMENTS FOR PIN 1 ORIENTATION IN TAPE

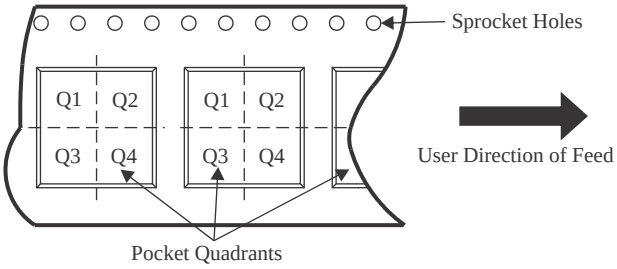

*All dimensions are nominal

Device	Package Type	Package Drawing	Pins	SPQ	Reel Diameter (mm)	Reel Width W1 (mm)	A0 (mm)	B0 (mm)	K0 (mm)	P1 (mm)	W (mm)	Pin1 Quadrant
TS3USB221DRCR	VSON	DRC	10	3000	330.0	12.4	3.3	3.3	1.1	8.0	12.0	Q2
TS3USB221RSER	UQFN	RSE	10	3000	180.0	9.5	1.7	2.2	0.75	4.0	8.0	Q1

TAPE AND REEL BOX DIMENSIONS

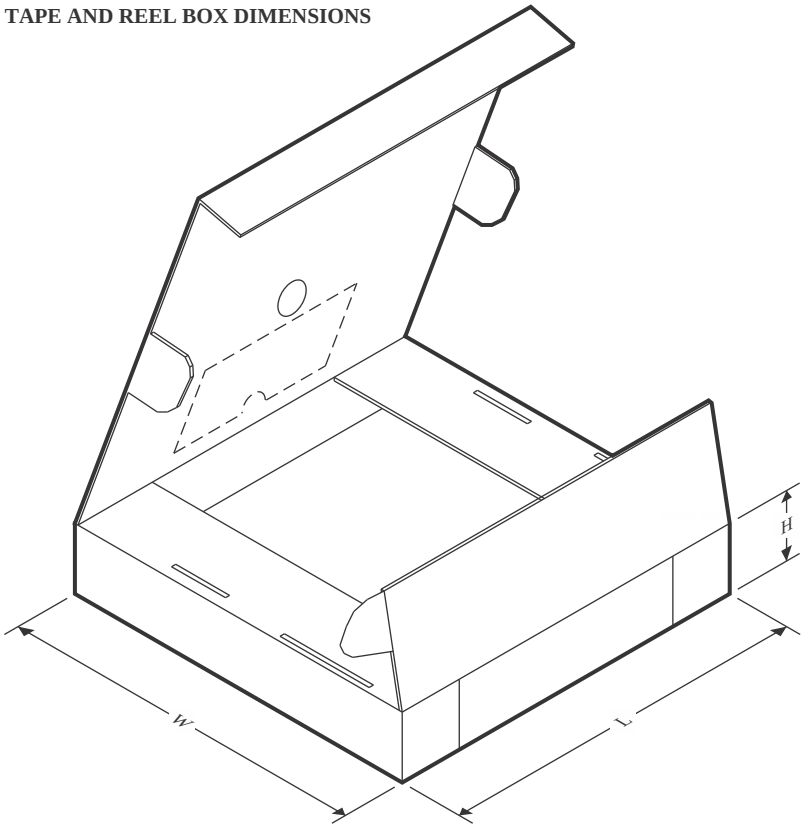

*All dimensions are nominal

Device	Package Type	Package Drawing	Pins	SPQ	Length (mm)	Width (mm)	Height (mm)
TS3USB221DRCR	VSON	DRC	10	3000	356.0	356.0	35.0
TS3USB221RSER	UQFN	RSE	10	3000	189.0	185.0	36.0

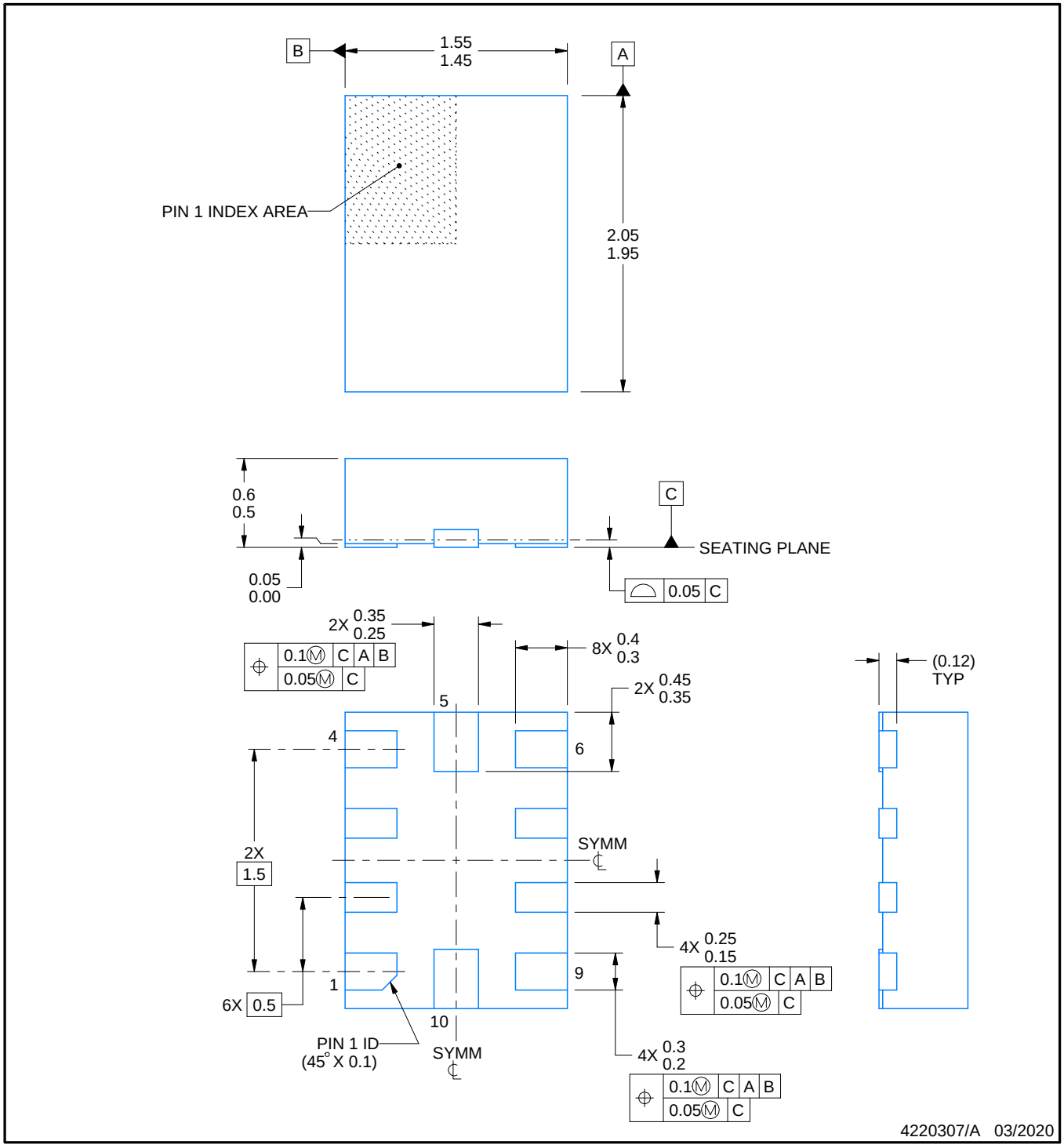

NOTES:

1. All linear dimensions are in millimeters. Any dimensions in parenthesis are for reference only. Dimensioning and tolerancing per ASME Y14.5M.
2. This drawing is subject to change without notice.

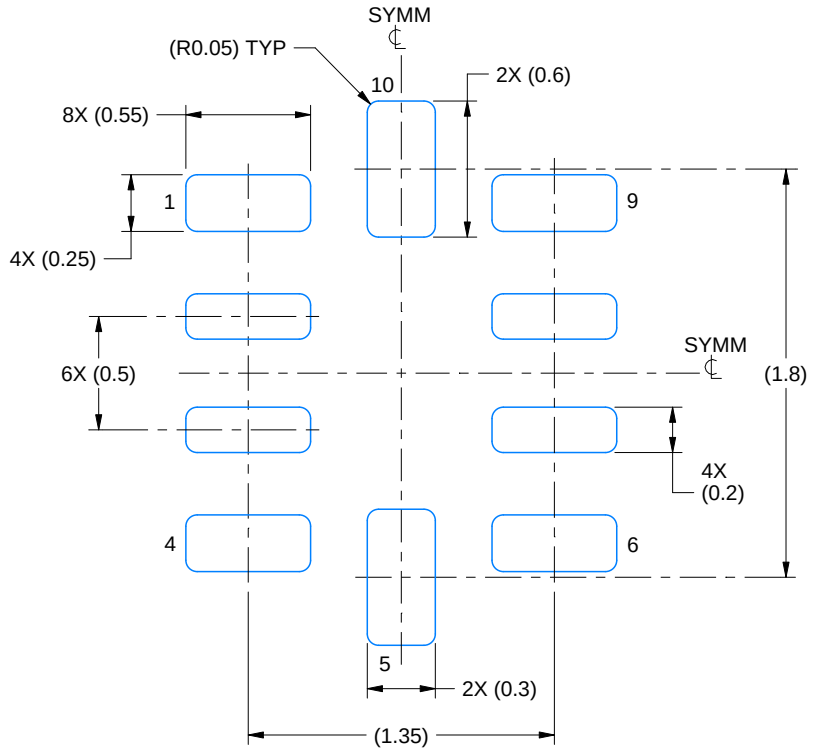

LAND PATTERN EXAMPLE
EXPOSED METAL SHOWN
SCALE:30X

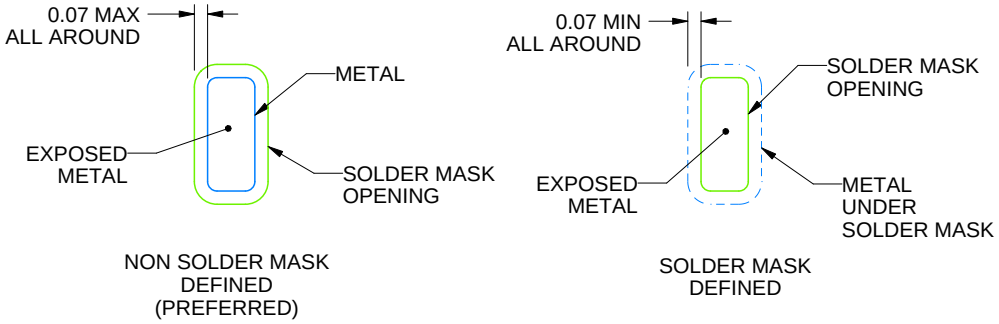

SOLDER MASK DETAILS
NOT TO SCALE

4220307/A 03/2020

NOTES: (continued)

3. For more information, see Texas Instruments literature number SLUA271 (www.ti.com/lit/slua271).

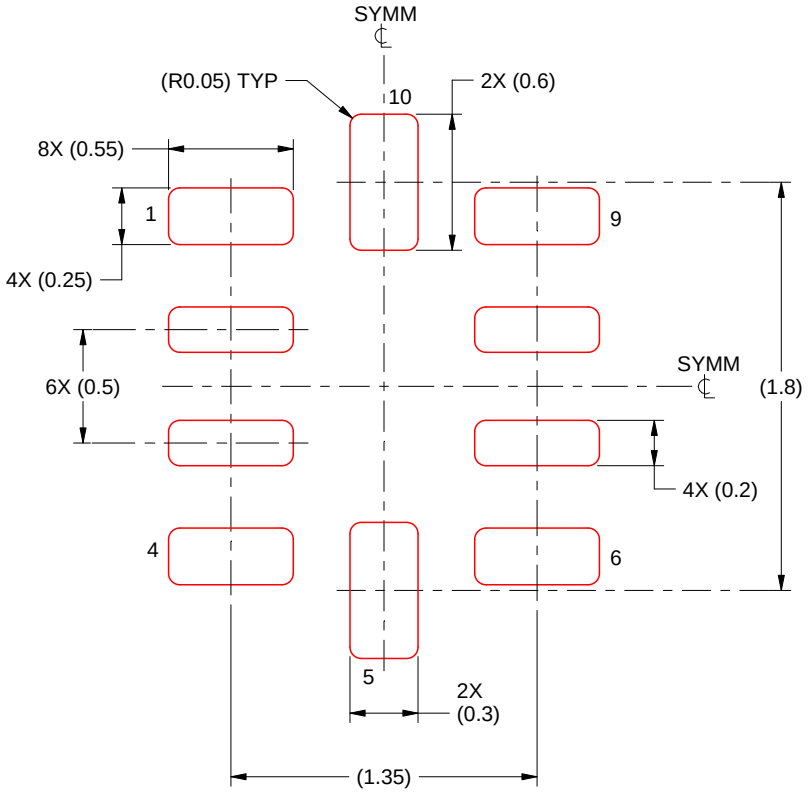

SOLDER PASTE EXAMPLE
BASED ON 0.1 mm THICKNESS
SCALE: 30X

4220307/A 03/2020

NOTES: (continued)

5. Laser cutting apertures with trapezoidal walls and rounded corners may offer better paste release. IPC-7525 may have alternate design recommendations.

GENERIC PACKAGE VIEW

DRC 10

VSON - 1 mm max height

3 x 3, 0.5 mm pitch

PLASTIC SMALL OUTLINE - NO LEAD

This image is a representation of the package family, actual package may vary.
Refer to the product data sheet for package details.

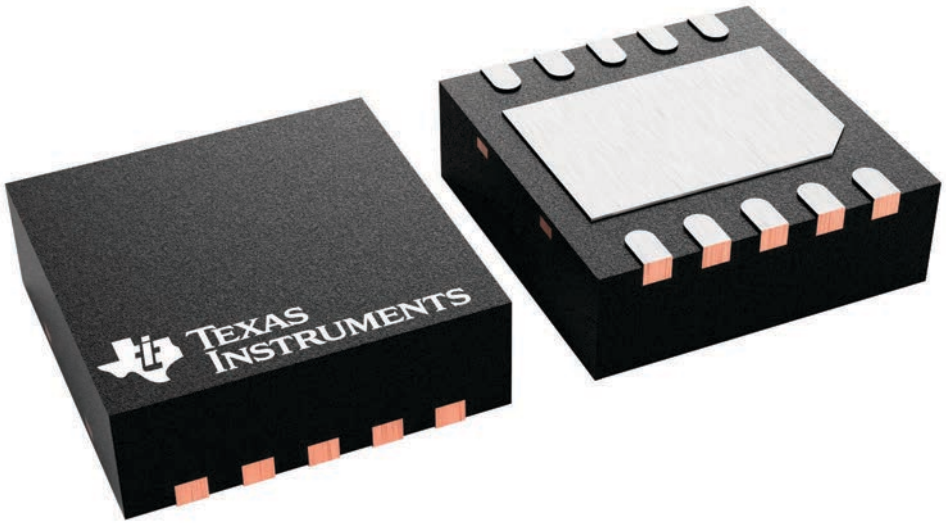

4226193/A

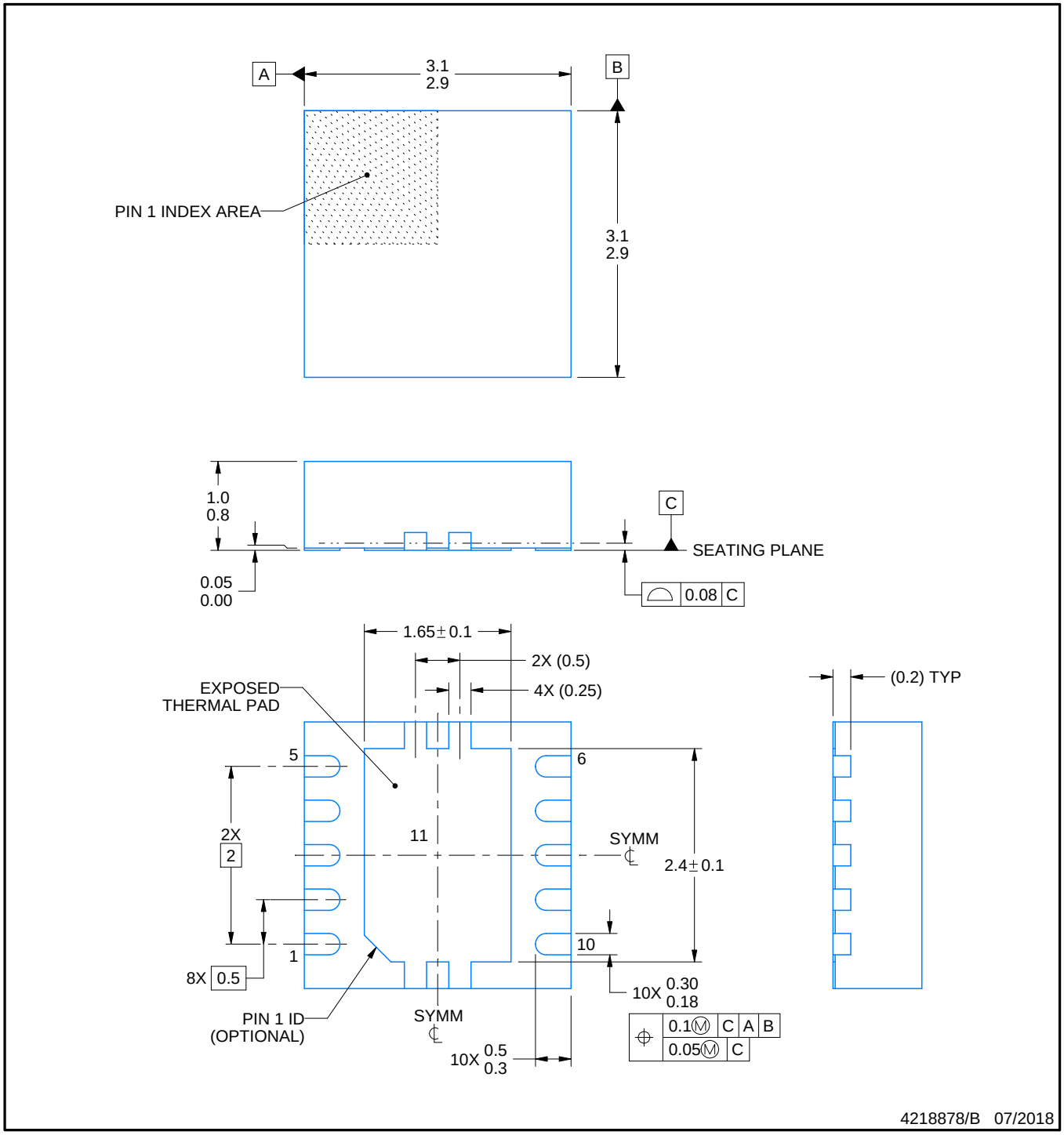

NOTES:

1. All linear dimensions are in millimeters. Any dimensions in parenthesis are for reference only. Dimensioning and tolerancing per ASME Y14.5M.
2. This drawing is subject to change without notice.
3. The package thermal pad must be soldered to the printed circuit board for optimal thermal and mechanical performance.

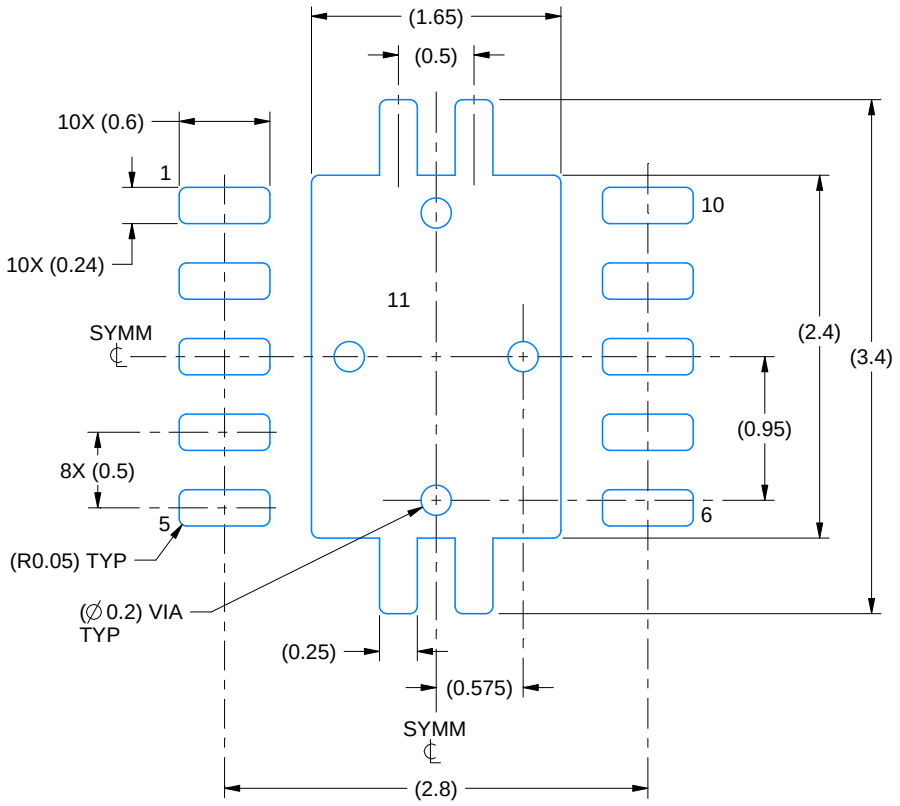

LAND PATTERN EXAMPLE
EXPOSED METAL SHOWN
SCALE:20X

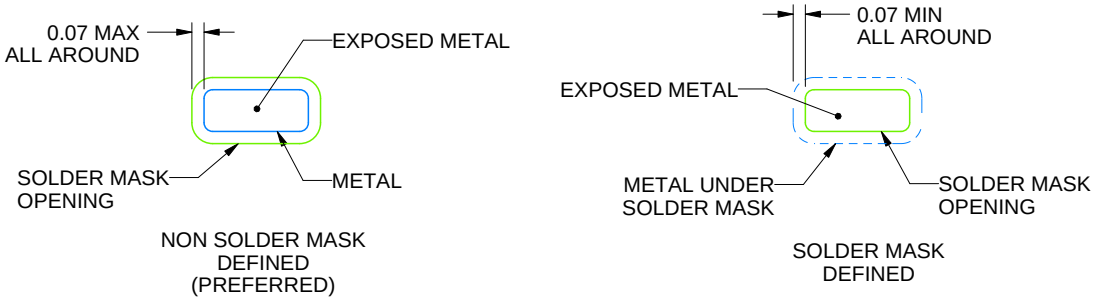

SOLDER MASK DETAILS

4218878/B 07/2018

NOTES: (continued)

4. This package is designed to be soldered to a thermal pad on the board. For more information, see Texas Instruments literature number SLUA271 (www.ti.com/lit/slua271).
5. Vias are optional depending on application, refer to device data sheet. If any vias are implemented, refer to their locations shown on this view. It is recommended that vias under paste be filled, plugged or tented.

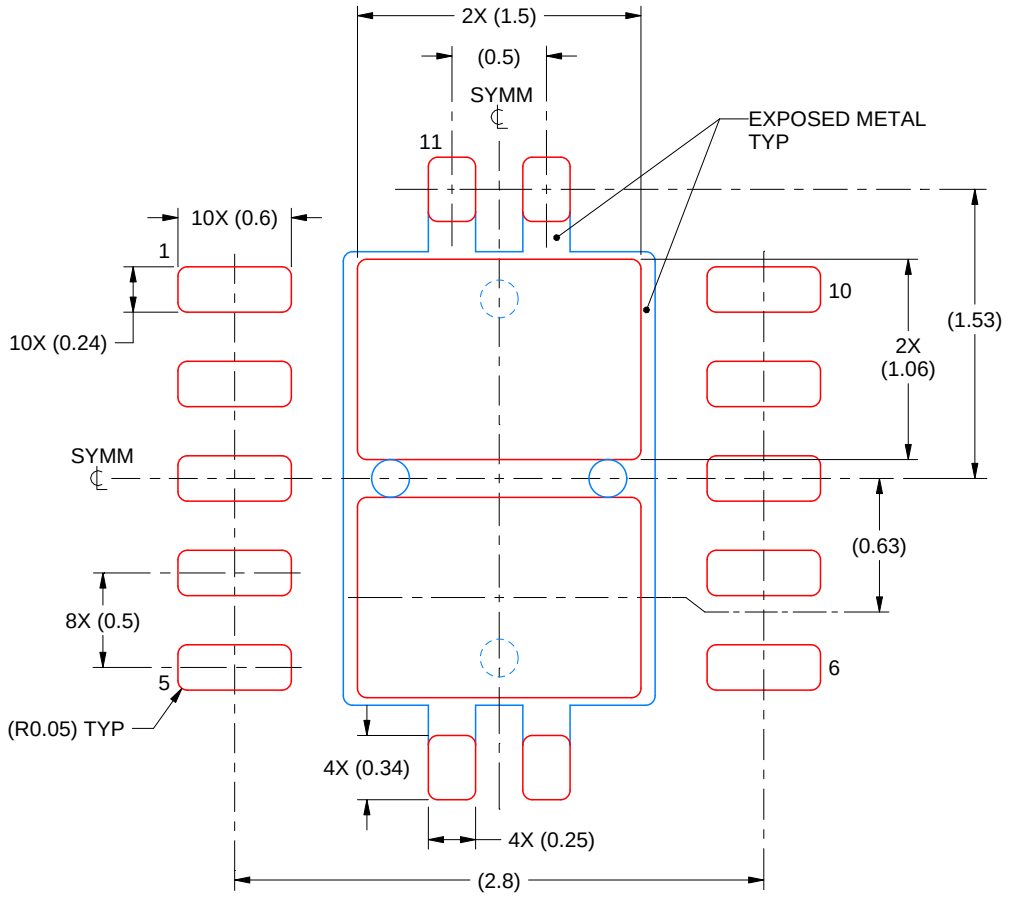

SOLDER PASTE EXAMPLE
BASED ON 0.125 mm THICK STENCIL

EXPOSED PAD 11:
80% PRINTED SOLDER COVERAGE BY AREA
SCALE:25X

4218878/B 07/2018

NOTES: (continued)

6. Laser cutting apertures with trapezoidal walls and rounded corners may offer better paste release. IPC-7525 may have alternate design recommendations.

重要なお知らせと免責事項

TI は、技術データと信頼性データ (データシートを含みます)、設計リソース (リファレンス・デザインを含みます)、アプリケーションや設計に関する各種アドバイス、Web ツール、安全性情報、その他のリソースを、欠陥が存在する可能性のある「現状のまま」提供しており、商品性および特定目的に対する適合性の黙示保証、第三者の知的財産権の非侵害保証を含むいかなる保証も、明示的または黙示的にかかわらず拒否します。

これらのリソースは、TI 製品を使用する設計の経験を積んだ開発者への提供を意図したものです。(1) お客様のアプリケーションに適した TI 製品の選定、(2) お客様のアプリケーションの設計、検証、試験、(3) お客様のアプリケーションに該当する各種規格や、その他のあらゆる安全性、セキュリティ、規制、または他の要件への確実な適合に関する責任を、お客様のみが単独で負うものとします。

上記の各種リソースは、予告なく変更される可能性があります。これらのリソースは、リソースで説明されている TI 製品を使用するアプリケーションの開発の目的でのみ、TI はその使用をお客様に許諾します。これらのリソースに関して、他の目的で複製することや掲載することは禁止されています。TI や第三者の知的財産権のライセンスが付与されている訳ではありません。お客様は、これらのリソースを自身で使用した結果発生するあらゆる申し立て、損害、費用、損失、責任について、TI およびその代理人を完全に補償するものとし、TI は一切の責任を拒否します。

TI の製品は、TI の販売条件、または ti.com やかかる TI 製品の関連資料などのいずれかを通じて提供する適用可能な条項の下で提供されています。TI がこれらのリソースを提供することは、適用される TI の保証または他の保証の放棄の拡大や変更を意味するものではありません。

お客様がいかなる追加条項または代替条項を提案した場合でも、TI はそれらに異議を唱え、拒否します。

郵送先住所：Texas Instruments, Post Office Box 655303, Dallas, Texas 75265
Copyright © 2024, Texas Instruments Incorporated