AFEx8201 低電力アプリケーション向け、電圧リファレンスと診断 ADC 内蔵 16 ビットおよび 14 ビット D/A コンバータ (DAC)

1 特長

- 機能安全対応
  - 機能安全システムの設計に役立つ資料を利用可能
- 低い静止電流:170µA (標準値)、210µA (最大値)
- 16 ビットまたは 14 ビット、モノリシック高性能 DAC
  - DAC 出力範囲:0V～2.5V
  - デジタル DAC スルーレート制御
  - 16 ビットでの INL、4LSB
  - -40℃～+125℃の範囲で TUE が 0.07% FSR (最大値)
- 高度な診断向け、12 ビット、3.84kSPS の ADC (A/D コンバータ)
- 10ppm/℃ (最大値) の内蔵 1.25V リファレンス
- クロック出力付き内蔵 1.2288MHz 発振器
- デジタル インターフェイス:
  - シリアル ペリフェラル インターフェイス (SPI)
  - UART (Universal Asynchronous Receiver-Transmitter)
- フォルト検出:CRC ビット エラー チェック、ウィンドウ付きウォッチドッグ タイマ、診断 ADC
- 広い動作温度範囲:-55℃～+125℃

2 アプリケーション

- プロセス制御および産業用オートメーション
- PLC または DCS I/O モジュール
- 3 線式および 4 線式のトランスミッタ
- 4mA～20mA ループ電源アプリケーション

3 概要

16 ビットの AFE88201 および 14 ビットの AFE78201 (AFEx8201) は、プロセス制御およびファクトリ オートメーション アプリケーション向けに設計された、高集積度、高精度、超低消費電力の電圧出力付き D/A コンバータ (DAC) です。

AFEx8201 デバイスには、4mA～20mA の 3 線式または 4 線式センサ トランスミッタまたはアナログ出力モジュールを設計するために必要な構成要素のほとんどが含まれています。AFEx8201 には、高精度な DAC に加えて、10ppm/℃の電圧リファレンスと診断用 A/D コンバータ (ADC) が内蔵されています。内在的および機能安全上の問題に対応するには、外部の電圧電流変換と、電源のレギュレーションが必要です。

内蔵の診断 ADC は複数の内部ノードに多重化されており、自動的な自己ヘルス チェックを可能にしています。このチェックにより、内蔵のバイアス源や電源レギュレータ、電圧リファレンス、DAC 出力、ダイ温度に関するエラーや故障を検出でき、さらにオプションとして外部電圧源の問題も検出できます。診断用 ADC、CRC フレーム エラー チェック、あるいはウィンドウ付きのウォッチドッグ タイマから、いずれかの障害が検出された場合、本デバイスは (オプションとして) 割り込みの発行、あるいはユーザー指定のフェイルセーフ状態への遷移、またはその両方を開始できます。

製品情報

部品番号	分解能	パッケージ (1)
AFE78201	14 ビット	RRU (UQFN、24) 4.00mm × 4.00mm
AFE88201	16 ビット	

(1) 詳細については、セクション 11 を参照してください。

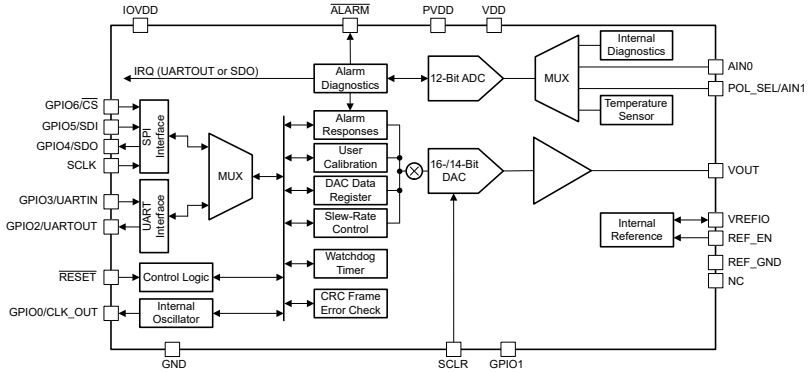

概略ブロック図

このリソースの元の言語は英語です。翻訳は概要を便宜的に提供するもので、自動化ツール (機械翻訳) を使用していることがあり、TI では翻訳の正確性および妥当性につきましては一切保証いたしません。実際の設計などの前には、ti.com で必ず最新の英語版をご参照くださいますようお願いいたします。

Table of Contents

1 特長 ... 1
2 アプリケーション ... 1
3 概要 ... 1
4 Pin Configuration and Functions ... 3
5 Specifications ... 5
5.1 Absolute Maximum Ratings ... 5
5.2 ESD Ratings ... 5
5.3 Recommended Operating Conditions ... 5
5.4 Thermal Information ... 5
5.5 Electrical Characteristics ... 6
5.6 Timing Requirements ... 10
5.7 Timing Diagrams ... 11
5.8 Typical Characteristics: VOUT DAC ... 12
5.9 Typical Characteristics: ADC ... 17
5.10 Typical Characteristics: Reference ... 18
5.11 Typical Characteristics: Power Supply ... 20
6 Detailed Description ... 21
6.1 Overview ... 21
6.2 Functional Block Diagram ... 21
6.3 Feature Description ... 22
6.4 Device Functional Modes ... 41
6.5 Programming ... 45
7 Register Maps ... 54
7.1 AFEx8201 Registers ... 56
8 Application and Implementation ... 77
8.1 Application Information ... 77
8.2 Typical Application ... 78
8.3 Initialization Setup ... 84
8.4 Power Supply Recommendations ... 84
8.5 Layout ... 85
9 Device and Documentation Support ... 87
9.1 Documentation Support ... 87
9.2 ドキュメントの更新通知を受け取る方法 ... 87
9.3 サポート・リソース ... 87
9.4 Trademarks ... 87
9.5 静電気放電に関する注意事項 ... 87
9.6 用語集 ... 87
10 Revision History ... 88
11 Mechanical, Packaging, and Orderable Information ... 88

Copyright © 2024 Texas Instruments Incorporated

4 Pin Configuration and Functions

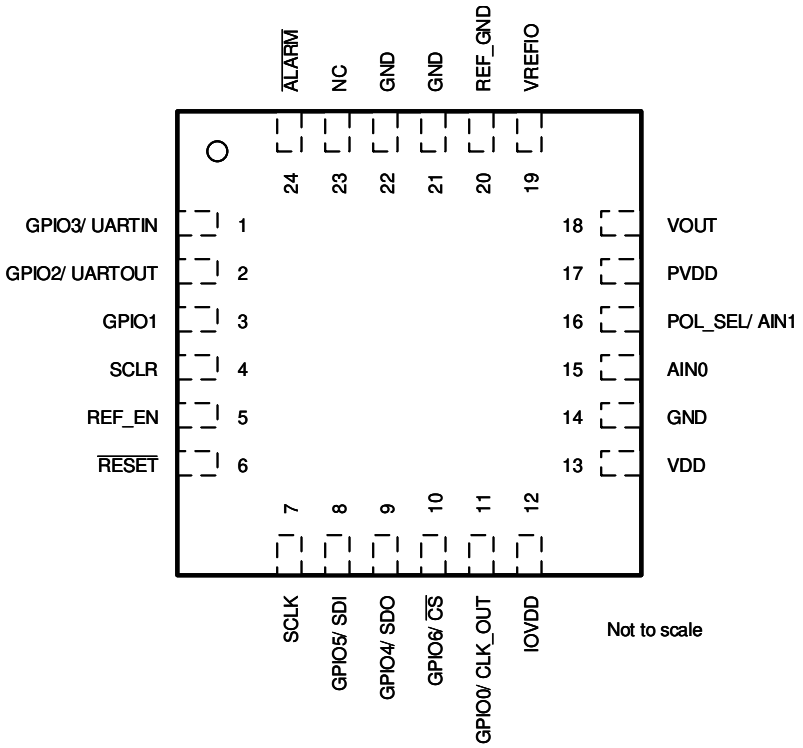

図 4-1. RRU Package, 24-pin UQFN (Top View)

表 4-1. Pin Functions

PIN		TYPE[(1)]	DESCRIPTION
NAME	NO.		
AIN0	15	AI	ADC input voltage. The input range is 0 V to 2 × VREF.
$\overline{\text{ALARM}}$	24	DO	Alarm notification pin, open drain, active low. When alarm condition is asserted, this pin is held to logic low; otherwise, this pin is in a high-impedance state (Hi-Z).
GND	14	P	Digital and analog ground. Ground reference point for all circuitry on the device.
GND	21	P	Digital and analog ground.
GND	22	P	Digital and analog ground.
GPIO0/ CLK_OUT	11	DO/DI	General-purpose input/output (GPIO) pin. Can be configured as a clock output for the 1.2288-MHz internal clock or as a timer. In Hi-Z if not driven. An external pullup or pulldown resistor is required.
GPIO1	3	DO/DI	General-purpose input/output (GPIO) pin. In Hi-Z if not driven. An external pullup or pulldown resistor is required.
GPIO2/ UARTOUT	2	DO/DI	General-purpose input/output (GPIO) pin. Configured as UART data output at power up. This pin can be configured to function as IRQ pin in SPI only mode. In Hi-Z if not driven. An external pullup or pulldown resistor is required.
GPIO3/ UARTIN	1	DI/DO	General-purpose input/output (GPIO) pin. Configured as UART data input at power up. Connect to IOVDD or logic high if not used. An external pullup or pulldown resistor is required.
GPIO4/ SDO	9	DO/DI	General-purpose input/output (GPIO) pin. Can be configured as an SPI data output in SPI mode. Data are output on the rising edge of SCLK when $\overline{\text{CS}}$ is low. Interrupt request (IRQ) pin in the UART break mode (UBM). The output is in Hi-Z at power up and must be enabled in the CONFIG register. An external pullup or pulldown resistor is required.
GPIO5/ SDI	8	DI/DO	General-purpose input/output (GPIO) pin. Configured as an SPI data input at power up. Data are clocked into the 24-bit input shift register on the falling edge of the serial clock input. SDI is a Schmitt-trigger logic input. An external pullup or pulldown resistor is required.

Copyright © 2024 Texas Instruments Incorporated

表 4-1. Pin Functions (続き)

PIN		TYPE[(1)]	DESCRIPTION
NAME	NO.		
GPIO6/ $\overline{CS}$	10	DI/DO	General-purpose input/output (GPIO) pin. Configured as an SPI chip-select input at power up. Data bits are clocked into the serial shift register when $\overline{CS}$ is low. When $\overline{CS}$ is high, SDO is in Hi-Z and data on SDI are ignored. An external pullup or pulldown resistor is required.
IOVDD	12	P	Interface supply. Supply voltage for digital input and output circuitry. This voltage sets the logical thresholds for the digital interfaces.
NC	23	—	Must be left unconnected.
POL_SEL/ AIN1	16	DI/AI	ADC input voltage if SPECIAL_CFG.AIN1_ENB bit is set to 1. The input range is 0 V to 2 × VREF. Otherwise, this pin acts as ALMV_POL, which sets the polarity of the VOUT alarm voltage.
PVDD	17	P	Power supply for the internal low-dropout regulator (LDO), ADC input and VOUT DAC output.
REF_EN	5	DI	Internal VREF enable input. A logic high on this pin enables the internal VREF and the VREFIO pin outputs 1.25 V. A logic low on this pin disables the internal VREF and the external 1.25-V reference is required at the VREFIO pin.
REF_GND	20	P	GND reference for VREFIO pin.
$\overline{RESET}$	6	DI	Reset pin, active low. Logic low on this pin turns off the internal oscillator and resets the device. Logic high returns the device to normal operation. Do not leave any digital pins floating.
SCLK	7	DI	SPI clock. Data are transferred at rates up to 12.5 MHz. SCLK is a Schmitt-trigger logic input. Connect to GND or logic low if not used. Do not leave any digital pins floating.
SCLR	4	DI	DAC clear input pin in SPI mode. A logic high on this pin forces the DAC output into a CLEAR state. Connect to GND in UBM. Do not leave any digital input pins floating.
VDD	13	P/AO	Internal low voltage LDO output. When 2.7 V to 5.5 V on PVDD pin is provided, the internal LDO is enabled. Connect a 1-µF to 10-µF capacitor on this pin.
VOUT	18	AO	DAC output voltage.
VREFIO	19	AI/AO	When the internal VREF is enabled by REF_EN pin, this pin outputs the internal VREF voltage. In this case, a load capacitance of 70 nF to 130 nF is required for stability. When disabled, this pin is the external 1.25-V reference input.

(1) AI = analog input, AO = analog output, DI = digital input, DO = digital output, P = power.

Copyright © 2024 Texas Instruments Incorporated

5 Specifications

5.1 Absolute Maximum Ratings

over operating free-air temperature range (unless otherwise noted)[1]

			MIN	MAX	UNIT
	Voltage	PVDD, IOVDD to GND	–0.3	5.5	V
		VDD to GND	–0.3	1.98	V
		AIN0, POL_SEL/AIN1, VOUT to GND	–0.3	PVDD + 0.3	V
		Digital Input/Output to GND	–0.3	IOVDD + 0.3	V
		VREFIO to GND	–0.3	VDD + 0.3	V
		REF_GND to GND	–0.3	0.3	V
	Input current into any pin		–10	10	mA
T_J	Junction temperature		–55	150	°C
T_{stg}	Storage temperature		–65	150	

(1) Operation outside the *Absolute Maximum Ratings* may cause permanent device damage. *Absolute Maximum Ratings* do not imply functional operation of the device at these or any other conditions beyond those listed under *Recommended Operating Conditions*. If used outside the *Recommended Operating Conditions* but within the *Absolute Maximum Ratings*, the device may not be fully functional, and this may affect device reliability, functionality, performance, and shorten the device lifetime.

5.2 ESD Ratings

			VALUE	UNIT
$V_{(ESD)}$	Electrostatic discharge	Human body model (HBM), per ANSI/ESDA/JEDEC JS-001, all pins[1]	±2000	V
		Charged device model (CDM), per ANSI/ESDA/JEDEC JS-002, all pins[2]	±500	

(1) JEDEC document JEP155 states that 500-V HBM allows safe manufacturing with a standard ESD control process.
(2) JEDEC document JEP157 states that 250-V CDM allows safe manufacturing with a standard ESD control process.

5.3 Recommended Operating Conditions

over operating free-air temperature range (unless otherwise noted)

			MIN	NOM	MAX	UNIT
	PVDD to GND		2.7		5.5	V
	VDD to GND		1.71		1.89	V
	IOVDD to GND		1.71		5.5	V
	VREFIO to GND, external VREF		1.2	1.25	1.3	V
T_A	Ambient temperature	Specified	–40		125	°C
		Operating	–55		125	°C

5.4 Thermal Information

THERMAL METRIC[1]		AFEx8201 RRU (UQFN) 24 PINS	UNIT
$R_{\theta JA}$	Junction-to-ambient thermal resistance	103.1	°C/W
$R_{\theta JC(top)}$	Junction-to-case (top) thermal resistance	84.4	°C/W
$R_{\theta JC(bottom)}$	Junction-to-case (bottom) thermal resistance	N/A	°C/W
$R_{\theta JB}$	Junction-to-board thermal resistance	69.5	°C/W
Ψ_{JT}	Junction-to-top characterization parameter	0.4	°C/W
Ψ_{JB}	Junction-to-board characterization parameter	68.4	°C/W

(1) For more information about traditional and new thermal metrics, see the *Semiconductor and IC Package Thermal Metrics application report.*

5.5 Electrical Characteristics

all minimum and maximum values at T_A = –40°C to +125°C and all typical values at T_A = 25°C, PVDD = IOVDD = 3.3 V, external or internal VREFIO = 1.25 V, R_{LOAD} = 50 kΩ to GND, C_{LOAD} = 100 pF to GND, and digital inputs at IOVDD or GND (unless otherwise noted)

PARAMETER		TEST CONDITIONS	MIN	TYP	MAX	UNIT
VOUT DAC STATIC PERFORMANCE						
	Resolution	AFE88201	16			Bits
		AFE78201	14			
INL	Integral nonlinearity[(1)]	AFE88201, T_A = –40°C to +125°C	–12		12	LSB
		AFE88201, T_A = –40°C to +85°C	–4		4	
		AFE78201	–3		3	
DNL	Differential nonlinearity[(1)]		–1		1	LSB
TUE	Total unadjusted error[(1)]	T_A = –40°C to +125°C	–0.1		0.1	%FSR
		T_A = –40°C to +85°C	–0.08		0.08	
		T_A = 25°C	–0.05		0.05	
	Zero code error, no load	T_A = –40°C to +125°C			1	mV
		T_A = –40°C to +85°C			1	
		T_A = 25°C			0.5	
	Zero code error temperature coefficient			±3		ppm/°C
	Offset error[(1)]	T_A = –40°C to +125°C	–0.07		0.07	%FSR
		T_A = –40°C to +85°C	–0.05		0.05	
		T_A = 25°C	–0.03		0.03	
	Offset error temperature coefficient [(1)]			±3		ppm/°C
	Gain error[(1)]	T_A = –40°C to +125°C	–0.1		0.1	%FSR
		T_A = –40°C to +85°C	–0.08		0.08	
		T_A = 25°C	–0.05		0.05	
	Gain error temperature coefficient[(1)]			±3		ppm FSR/°C
	Full-scale error	T_A = –40°C to +125°C	–0.1		0.1	%FSR
		T_A = –40°C to +85°C	–0.08		0.08	
		T_A = 25°C	–0.05		0.05	
	Full-scale error temperature coefficient			±3		ppm FSR/°C
VOUT DAC DYNAMIC PERFORMANCE						
t_s	Output voltage settling time	¼ to ¾ scale and ¾ to ¼ scale settling to ±2 LSB		65		µs
		10-mV step settling to ±2 LSB		30		
	Slew rate	Full-scale transition measured from 10% to 90%		30		mV/µs
V_n	Output noise	0.1 Hz to 10 Hz, DAC at midscale		0.25		LSBpp
		100-kHz bandwidth, DAC at midscale		32		µVrms
V_n	Output noise density	Measured at 1 kHz, DAC at midscale, PVDD = 3 V		180		nV/√Hz
		Measured at 1 kHz, DAC at midscale, PVDD = 5 V		260		
	Power supply rejection ratio (ac)	200-mV 50-Hz to 60-Hz sine wave superimposed on power supply voltage, DAC at midscale.		85		dB
	Code change glitch impulse	Midcode ±1 LSB (including feedthrough)		4.5		nV-s
	Code change glitch magnitude	Midcode ±1 LSB (including feedthrough), PVDD = 5 V		1.5		mV
	Digital feedthrough	At SCLK = 1 MHz, DAC output at midscale		1		nV-s

Copyright © 2024 Texas Instruments Incorporated

5.5 Electrical Characteristics (続き)

all minimum and maximum values at T_A = –40°C to +125°C and all typical values at T_A = 25°C, PVDD = IOVDD = 3.3 V, external or internal VREFIO = 1.25 V, R_{LOAD} = 50 kΩ to GND, C_{LOAD} = 100 pF to GND, and digital inputs at IOVDD or GND (unless otherwise noted)

PARAMETER		TEST CONDITIONS	MIN	TYP	MAX	UNIT
VOUT DAC OUTPUT CHARACTERISTICS						
	Output voltage		0		2.5	V
	VOUT alarm output high		2.35	2.5	2.65	V
	VOUT alarm output low		0.285	0.3	0.315	V
R_{LOAD}	Resistive load[(2)]		10			kΩ
C_{LOAD}	Capacitive load[(2)]				100	pF
	Load regulation	DAC at midscale, –1 mA ≤ I_{OUT} ≤ +1 mA		10		µV/mA
	Short-circuit current	Full-scale output shorted to GND		5		mA
		Zero output shorted to VDD		5		
	Output voltage headroom to PVDD	DAC at full code, I_{OUT} = 1 mA (sourcing)	200			mV
Z_O	Large signal dc output impedance	To GND, DAC at code 0		60		Ω
		DAC at midscale		10		mΩ
		DAC at code 65535		10		
		Output Hi-Z		500		kΩ
	Power supply rejection ratio (dc)	DAC at midscale		0.1		mV/V
	Output voltage drift vs time, ideal VREF	T_A = 35°C, VOUT = midscale, 1000 hours		±5		ppmFSR
DIAGNOSTIC ADC						
	Input voltage		0		2.5	V
	Resolution			12		Bits
DNL	Differential nonlinearity	Specified 12-bit monotonic	–1	±0.2	1	LSB
INL	Integral nonlinearity		–4	±1	4	LSB
	Offset error	After calibration	–10	±1.6	10	LSB
	Gain error		–0.8	±0.13	0.8	%FSR
	Noise			±4		LSB
	Input capacitance			6		pF
	Input bias current	ADC not converting	–50		50	nA
	Acquisition time			52		µs
	Conversion time			210		µs
	Conversion rate				3.84	kSPS
	Temperature sensor accuracy			5		°C
INTERNAL OSCILLATOR						
	Frequency	T_A = –40°C to +125°C	1.2165	1.2288	1.2411	MHz

5.5 Electrical Characteristics (続き)

all minimum and maximum values at T_A = –40°C to +125°C and all typical values at T_A = 25°C, PVDD = IOVDD = 3.3 V, external or internal VREFIO = 1.25 V, R_{LOAD} = 50 kΩ to GND, C_{LOAD} = 100 pF to GND, and digital inputs at IOVDD or GND (unless otherwise noted)

PARAMETER		TEST CONDITIONS	MIN	TYP	MAX	UNIT
VOLTAGE REFERENCE INPUT						
Z_{VREFIO}	Reference input impedance (VREFIO)			125		kΩ
C_{VREFIO}	Reference input capacitance (VREFIO)			100		pF
VOLTAGE REFERENCE OUTPUT						
	Output (initial accuracy)(3)	T_A = 25°C	1.248	1.25	1.252	V
	Output drift(3)	T_A = –40°C to +125°C			10	ppm/°C
	Output impedance(3)			0.1		Ω
	Output noise(3)	0.1 Hz to 10 Hz		7.5		μV_{PP}
	Output noise density(3)	Measured at 10 kHz, reference load = 100 nF		200		nV/√Hz
	Load current(3)	Sourcing, 0.1% VREF change from nominal		2.5		mA
		Sinking, 0.1% VREF change from nominal			0.3	
	Load regulation(3)	Sourcing, 0 mA to 2.5 mA		4		µV/mA
C_{OUT}	Stable output capacitance	T_A = –40°C to +125°C, ESR from 10 mΩ to 400 mΩ	70	100	130	nF
	Line regulation(3)			100		µV/V
	Output voltage drift vs time(3)	T_A = 35°C, 1000 hours		±100		ppm
	Thermal hysteresis(3)	1st cycle		500		µV
		Additional cycles		25		µV
VDD VOLTAGE REGULATOR OUTPUT						
	Output voltage		1.71	1.8	1.89	V
	Output impedance(3)	Sourcing, 0.5 mA to 2.5 mA		3		Ω
	Load current(3)	Sourcing, 1% VDD change from nominal		4		mA
THERMAL ALARM						
	Alarm trip point			130		°C
	Warning trip point			85		°C
	Hysteresis			12		°C
	Trip point absolute accuracy			5		°C
	Trip point relative accuracy			2		°C
DIGITAL INPUT CHARACTERISTICS						
V_{IH}	High-level input voltage		0.7			V/IOVDD
V_{IL}	Low-level input voltage				0.3	V/IOVDD
	Hysteresis voltage		0.05			V/IOVDD
	Input current		–1.56		1.56	µA
	Pin capacitance	Per pin		10		pF
DIGITAL OUTPUT CHARACTERISTICS						
V_{OH}	High-level output voltage	I_{SOURCE} = 1 mA	0.8			V/IOVDD
V_{OL}	Low-level output voltage	I_{SINK} = 1 mA			0.2	V/IOVDD
V_{OL}	Open-drain low-level output voltage	I_{SINK} = 2 mA			0.3	V
	Output pin capacitance			10		pF

Copyright © 2024 Texas Instruments Incorporated

5.5 Electrical Characteristics (続き)

all minimum and maximum values at T_A = –40°C to +125°C and all typical values at T_A = 25°C, PVDD = IOVDD = 3.3 V, external or internal VREFIO = 1.25 V, R_{LOAD} = 50 kΩ to GND, C_{LOAD} = 100 pF to GND, and digital inputs at IOVDD or GND (unless otherwise noted)

PARAMETER		TEST CONDITIONS	MIN	TYP	MAX	UNIT
POWER REQUIREMENTS						
I_{PVDD}	Current flowing into PVDD	DAC at zero-scale, SPI static		170	210	µA
I_{REFIO}	Internal reference current consumption			52	70	µA
I_{ADC}	ADC current consumption	ADC converting at 3.84 kSPS		10		µA
C_{VDD}	Recommended VDD decoupling capacitance		1		10	µF
I_{IOVDD}	Current flowing into IOVDD	SPI static		10	25	µA
I_{VREFIO}	Current flowing into VREFIO	DAC at midscale code		10		µA

(1) End point fit between code 512 to code 65,535 for 16-bit, code 128 to code 16,383 for 14-bit, DAC output unloaded, performance under resistive and capacitive load conditions are specified by design and characterization.
(2) Not production tested. Design target.
(3) Not production tested. Derived from the characterization data.

5.6 Timing Requirements

all input signals are specified with $t_R = t_F = 1$ ns/V and timed from a voltage level of $(V_{IL} + V_{IH}) / 2$, 2.7 V ≤ PVDD ≤ 5.5 V, $V_{IH} = 1.62$ V, $V_{IL} = 0.15$ V, VREFIO = 1.25 V and T_A = –40°C to +125°C (unless otherwise noted)

PARAMETER		MIN	NOM	MAX	UNIT
SERIAL INTERFACE - WRITE AND READ OPERATION					
f_{SCLK}	Serial clock frequency			12.5	MHz
$t_{SCLKHIGH}$	SCLK high time	36			ns
$t_{SCLKLOW}$	SCLK low time	36			ns
t_{CSHIGH}	$\overline{CS}$ high time	80			ns
t_{CSS}	$\overline{CS}$ to SCLK falling edge setup time	30			ns
t_{CSH}	SCLK falling edge to $\overline{CS}$ rising edge	30			ns
t_{CSRI}	$\overline{CS}$ rising edge to SCLK falling edge ignore	30			ns
t_{CSFI}	SCLK falling edge ignore to $\overline{CS}$ falling edge	5			ns
t_{SDIS}	SDI setup time	5			ns
t_{SDIH}	SDI hold time	5			ns
t_{SDOZD}	$\overline{CS}$ falling edge to SDO tri-state condition to driven			40	ns
t_{SDODZ}	$\overline{CS}$ rising edge to SDO driven to tri-state condition			40	ns
t_{SDODLY}	SCLK to SDO output delay			40	ns
UART					
$t_{BAUDUART}$	Baud rate = 9600 ±1%		104		µs
DIGITAL LOGIC					
$t_{DACWAIT}$	Sequential DAC update wait time	2.1			µs
t_{POR}	POR reset delay			100	µs
t_{RESET}	$\overline{RESET}$ pulse duration	100			ns
$t_{RESETWAIT}$	Wait time after $\overline{RESET}$ pulse	10			µs
t_{PULSE_GPIO}	GPIO input pulse duration	10			ns

Copyright © 2024 Texas Instruments Incorporated

5.7 Timing Diagrams

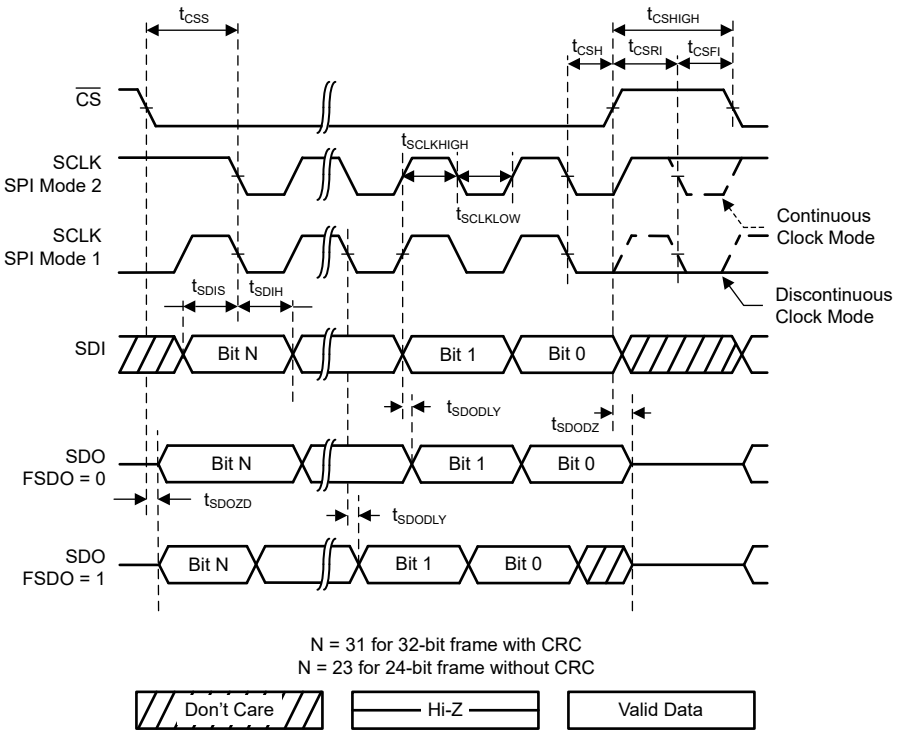

図 5-1. SPI Timing

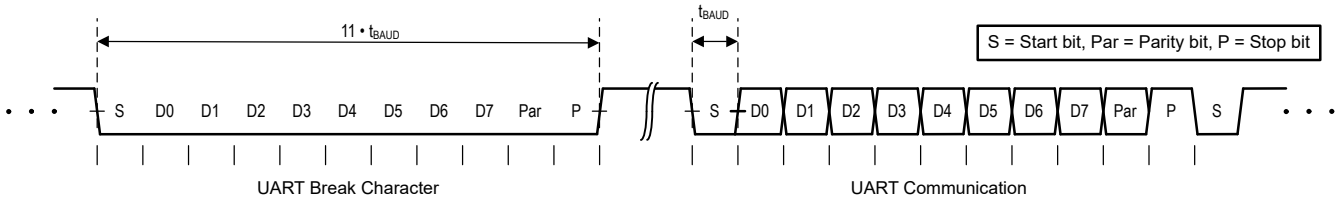

図 5-2. UBM Timing

5.8 Typical Characteristics: VOUT DAC

at T_A = 25°C, PVDD = 2.7 V, IOVDD = 1.8 V, external or internal VREFIO = 1.25 V, R_{LOAD} = 50 kΩ to GND, C_{LOAD} = 100 pF to GND, and digital inputs at IOVDD or GND (unless otherwise noted)

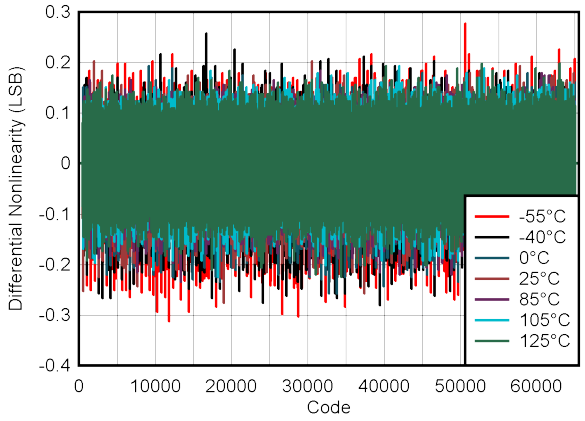

図 5-3. DAC DNL vs Digital Input Code

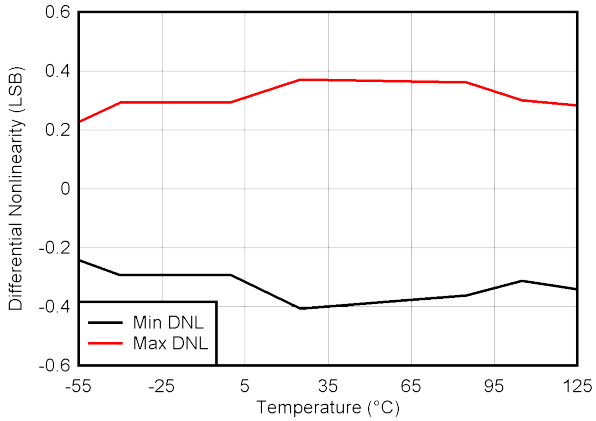

図 5-4. MIN and MAX DAC DNL Range vs Temperature

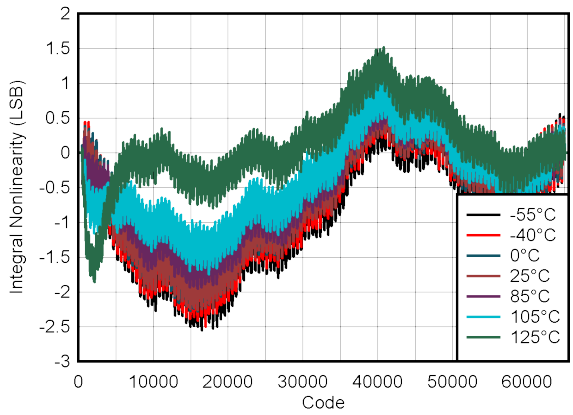

図 5-5. DAC INL vs Digital Input Code

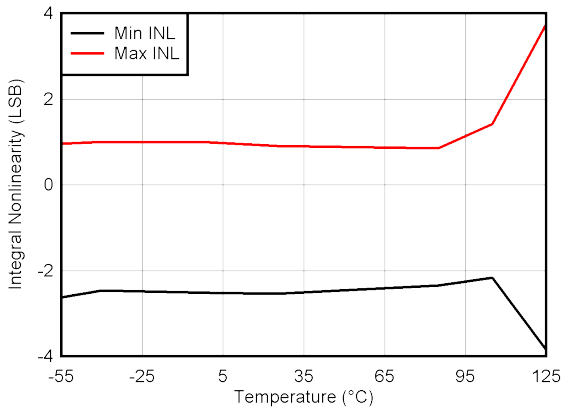

図 5-6. MIN and MAX DAC INL Range vs Temperature

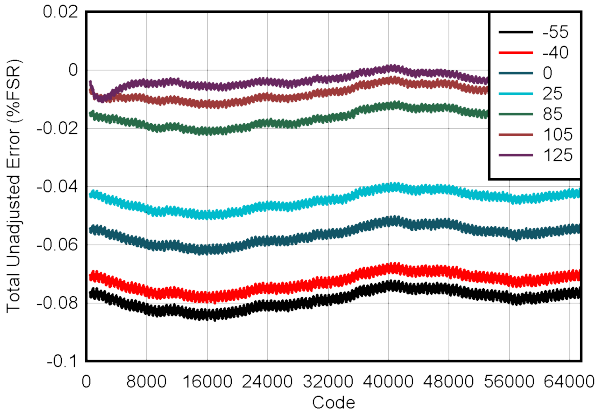

図 5-7. DAC TUE vs Digital Input Code

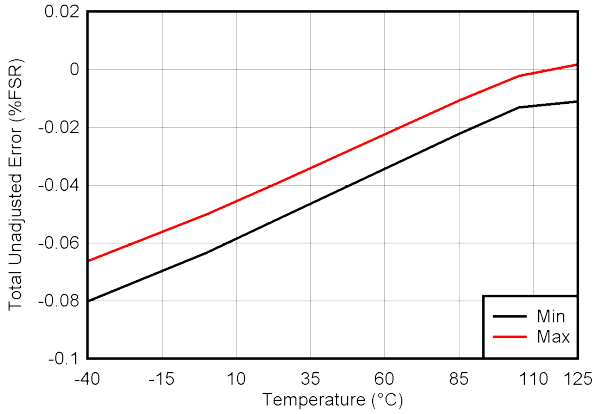

図 5-8. MIN and MAX DAC TUE vs Temperature

Copyright © 2024 Texas Instruments Incorporated

5.8 Typical Characteristics: VOUT DAC (continued)

at T_A = 25°C, PVDD = 2.7 V, IOVDD = 1.8 V, external or internal VREFIO = 1.25 V, R_{LOAD} = 50 kΩ to GND, C_{LOAD} = 100 pF to GND, and digital inputs at IOVDD or GND (unless otherwise noted)

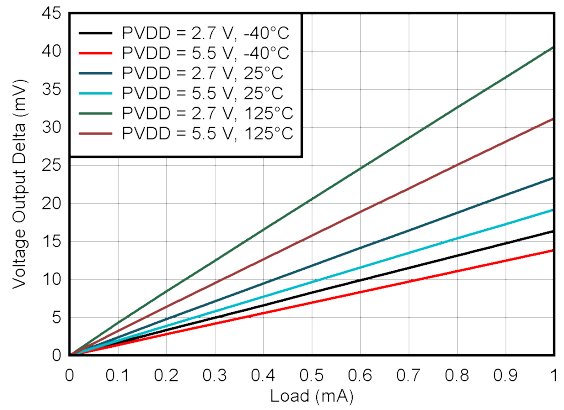

図 5-9. Zero-code Impedance

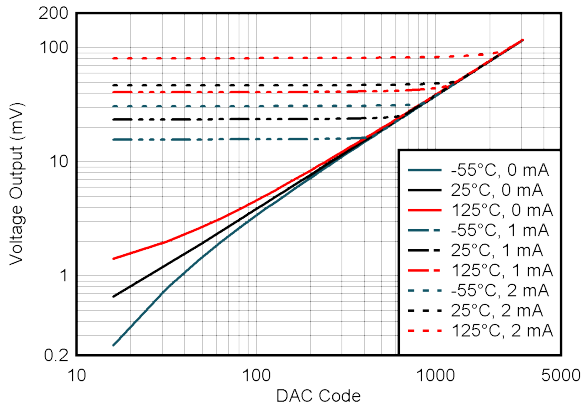

図 5-10. DAC Footroom Over Temperature and Load

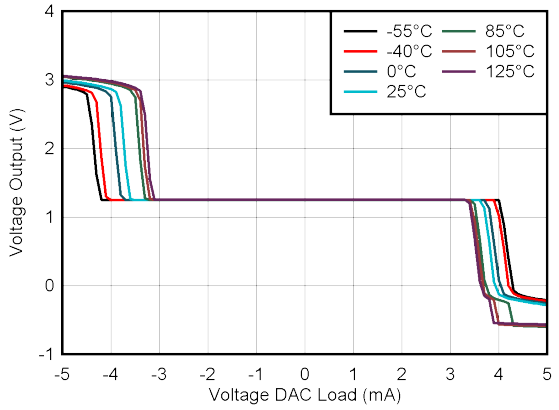

DAC at midcode

図 5-11. DAC Source and Sink Current Capability

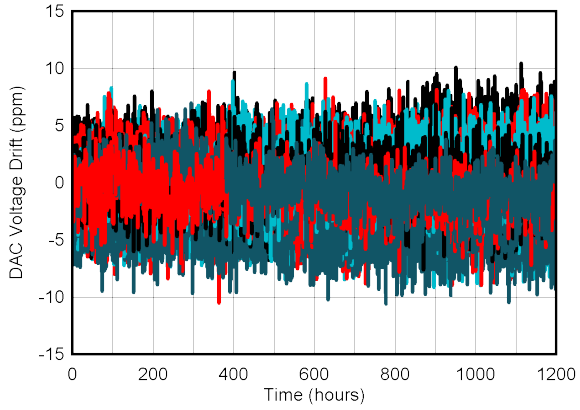

Ideal reference

図 5-12. DAC Output Voltage Long-Term Stability

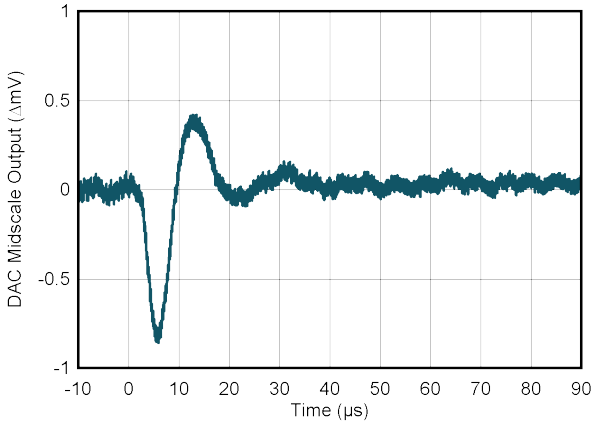

PVDD = 5.5 V

図 5-13. DAC Glitch Impulse Rising Edge

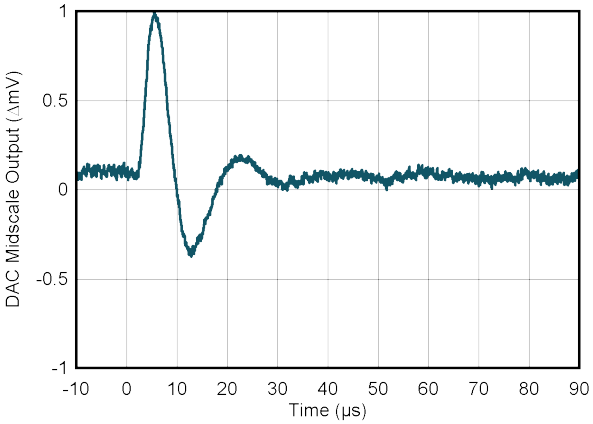

PVDD = 5.5 V

図 5-14. DAC Glitch Impulse Falling Edge

5.8 Typical Characteristics: VOUT DAC (continued)

at T_A = 25°C, PVDD = 2.7 V, IOVDD = 1.8 V, external or internal VREFIO = 1.25 V, R_{LOAD} = 50 kΩ to GND, C_{LOAD} = 100 pF to GND, and digital inputs at IOVDD or GND (unless otherwise noted)

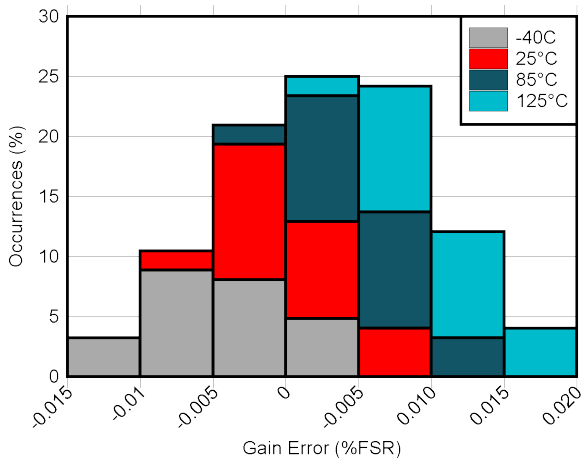

図 5-15. DAC Gain Error vs Temperature

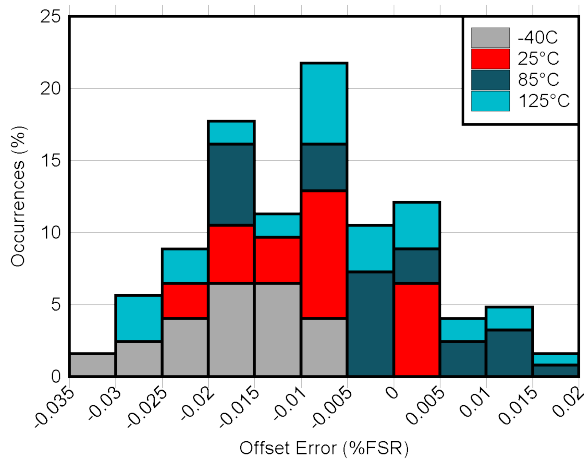

図 5-16. DAC Offset Error vs Temperature

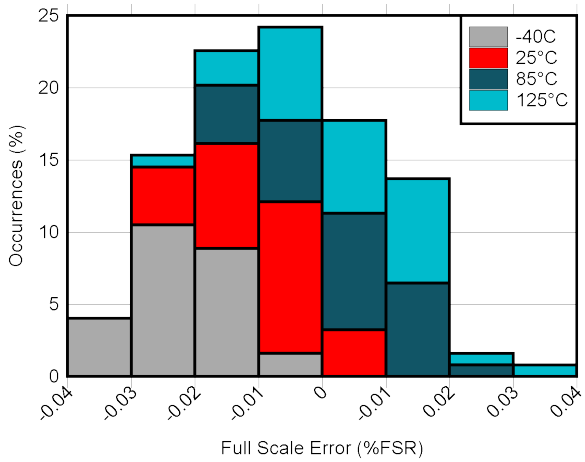

図 5-17. DAC Full Scale Error vs Temperature

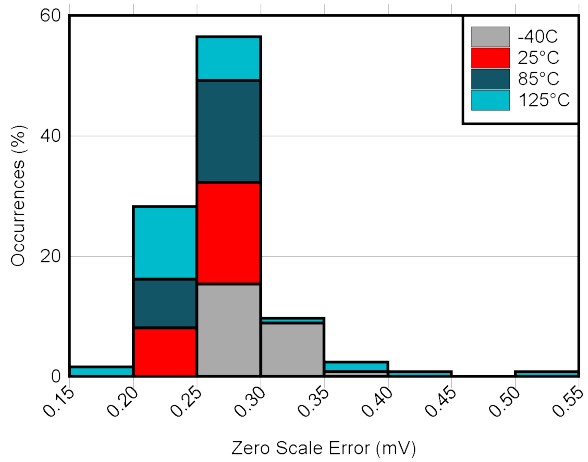

図 5-18. DAC Zero Scale Error vs Temperature

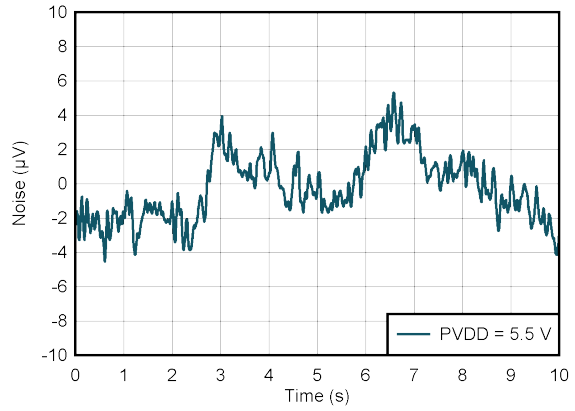

DAC at midcode PVDD = 5.5 V

図 5-19. DAC Output Noise, 0.1 Hz to 10 Hz

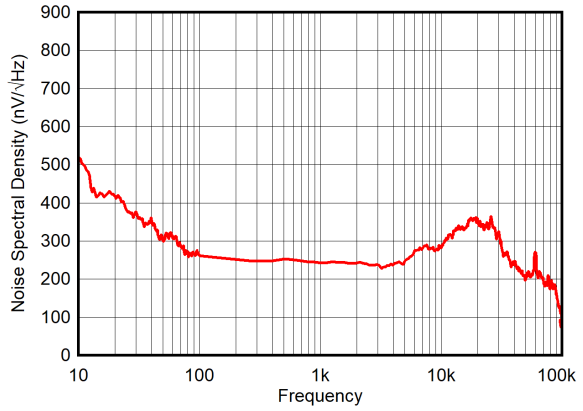

DAC at midcode PVDD = 5.5 V

図 5-20. DAC Output Noise Density vs Frequency

Copyright © 2024 Texas Instruments Incorporated

5.8 Typical Characteristics: VOUT DAC (continued)

at T_A = 25°C, PVDD = 2.7 V, IOVDD = 1.8 V, external or internal VREFIO = 1.25 V, R_{LOAD} = 50 kΩ to GND, C_{LOAD} = 100 pF to GND, and digital inputs at IOVDD or GND (unless otherwise noted)

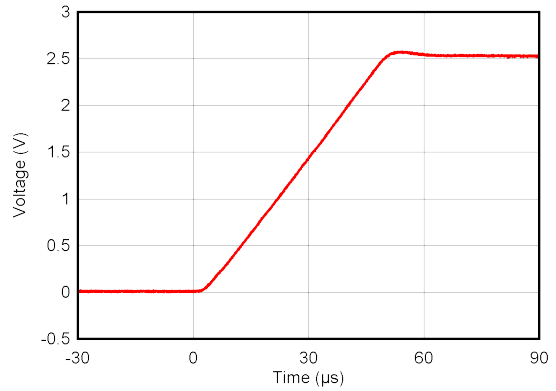

図 5-21. DAC Rising Settling Time

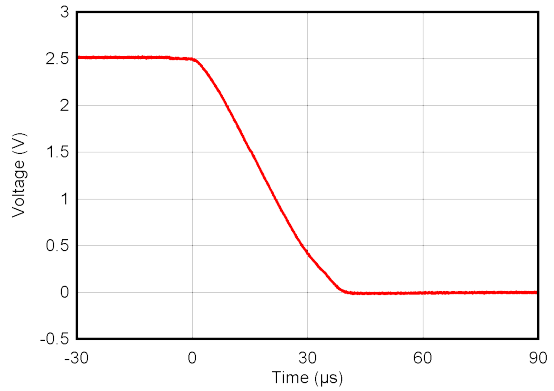

図 5-22. DAC Falling Settling Time

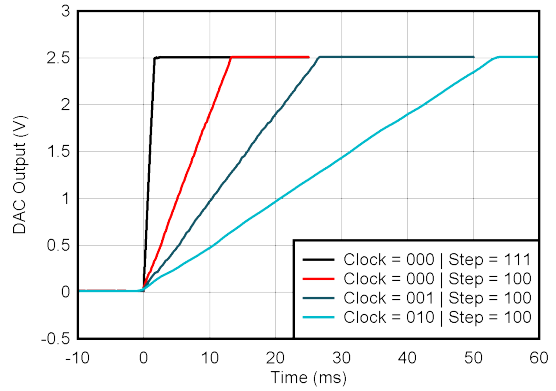

図 5-23. DAC Settling Time With Linear Slew Rate Control

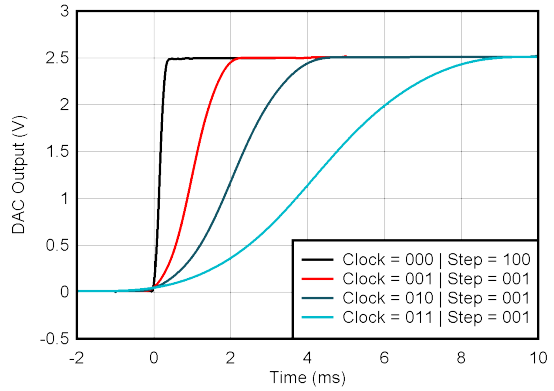

図 5-24. DAC Settling Time With Sinusoidal Slew Rate Control

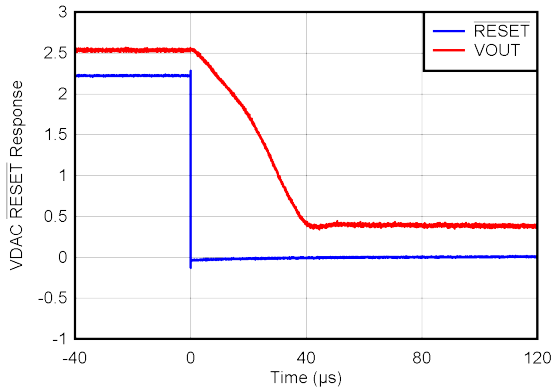

図 5-25. DAC $\overline{\text{RESET}}$ Response

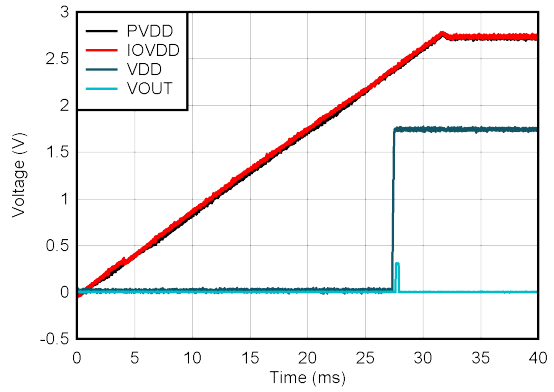

図 5-26. DAC Supply Power On, PVDD = 2.7 V

5.8 Typical Characteristics: VOUT DAC (continued)

at T_A = 25°C, PVDD = 2.7 V, IOVDD = 1.8 V, external or internal VREFIO = 1.25 V, R_{LOAD} = 50 kΩ to GND, C_{LOAD} = 100 pF to GND, and digital inputs at IOVDD or GND (unless otherwise noted)

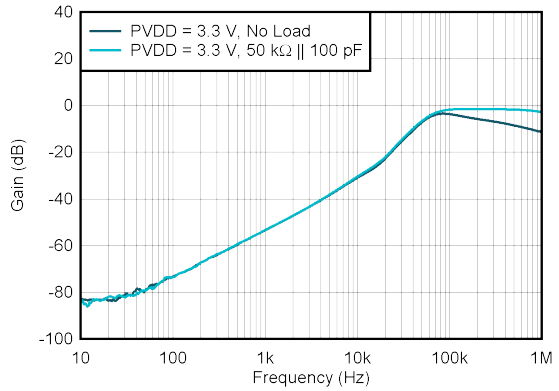

Internal reference

図 5-27. DAC AC PSRR vs Frequency

Copyright © 2024 Texas Instruments Incorporated

5.9 Typical Characteristics: ADC

at T_A = 25°C, PVDD = 3.3 V, IOVDD = 1.8 V, external or internal VREFIO = 1.25 V, R_{LOAD} = 50 kΩ to GND, C_{LOAD} = 100 pF to GND, and digital inputs at IOVDD or GND (unless otherwise noted)

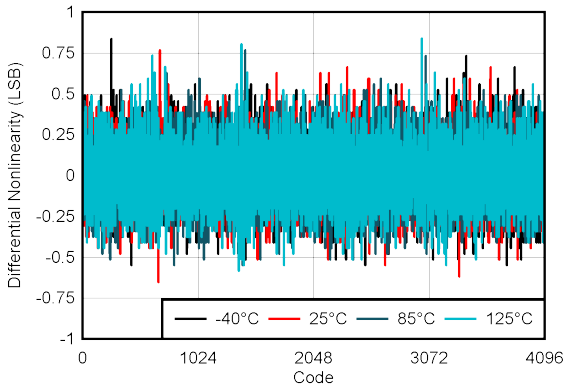

図 5-28. ADC DNL vs Digital Input Code

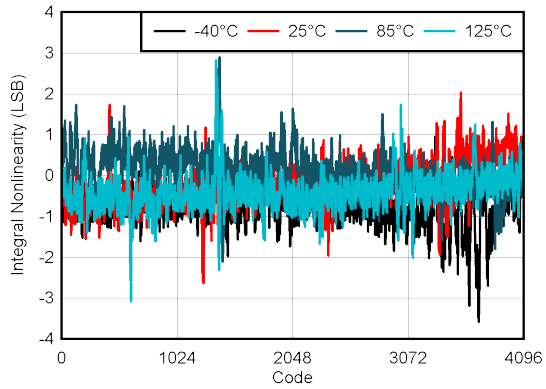

図 5-29. ADC INL vs Digital Input Code

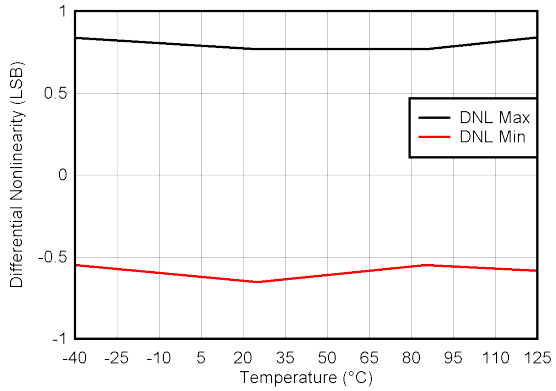

図 5-30. ADC DNL Range vs Temperature

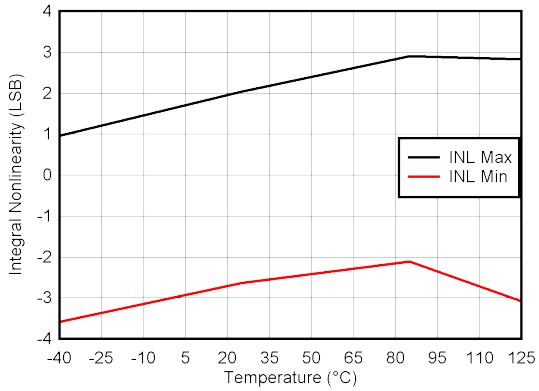

図 5-31. ADC INL Range vs Temperature

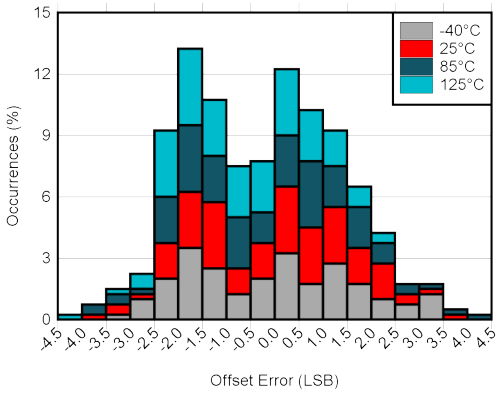

図 5-32. ADC Offset Error vs Temperature

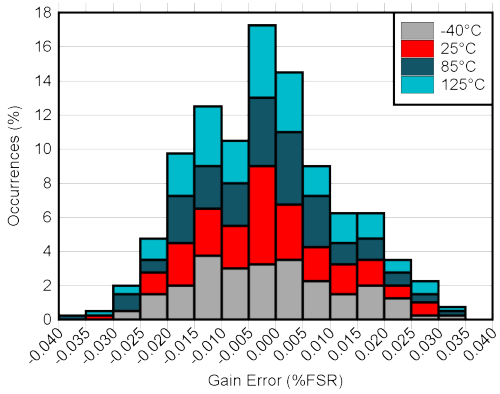

図 5-33. ADC Gain Error vs Temperature

5.10 Typical Characteristics: Reference

at T_A = 25°C, PVDD = IOVDD = 3.3 V, external or internal VREFIO = 1.25 V, R_{LOAD} = 50 kΩ to GND, C_{LOAD} = 100 pF to GND, and digital inputs at IOVDD or GND (unless otherwise noted)

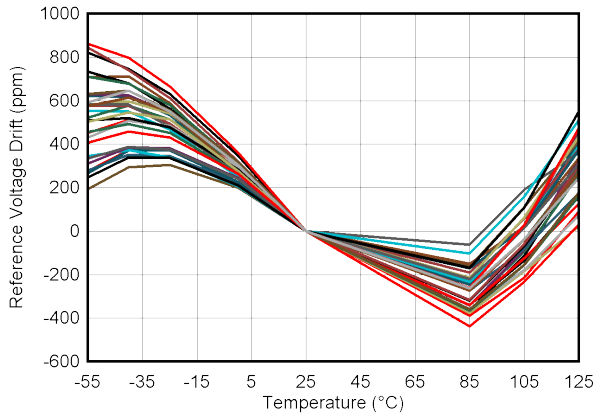

Pre-soldered 30 units

図 5-34. Reference Voltage Temperature Drift

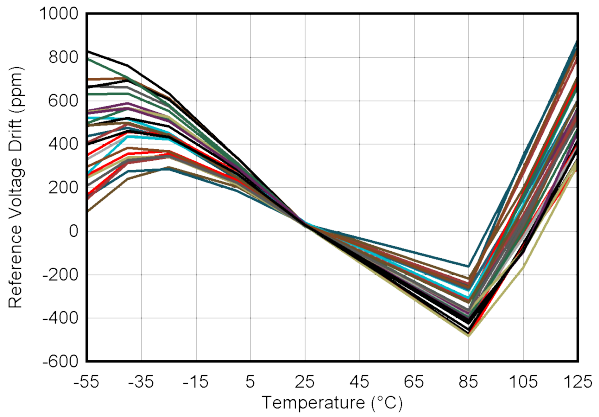

Post-soldered 30 units

図 5-35. Reference Voltage Temperature Drift

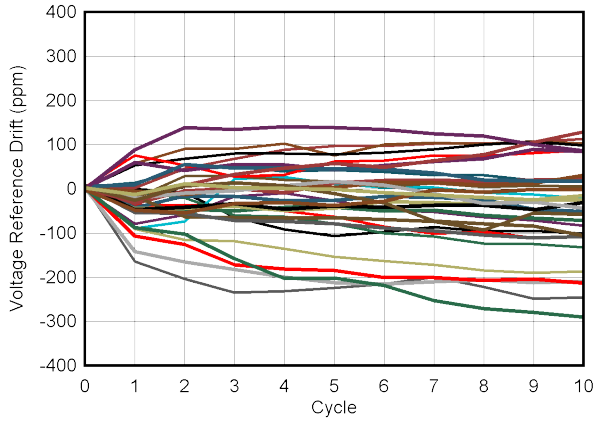

–40°C to +85°C cycles, 60 minutes per cycle, 30 units

図 5-36. Multiple Temperature Cycle Hysteresis

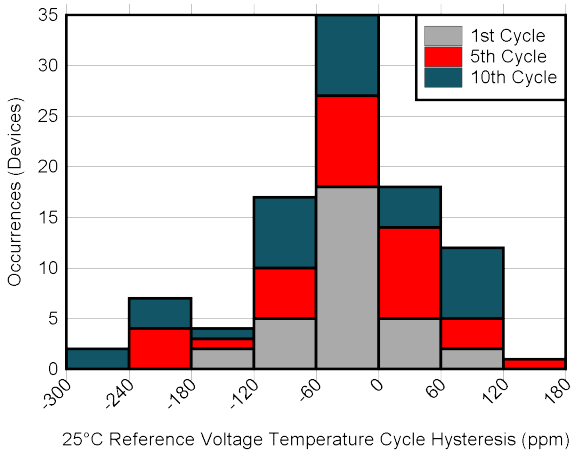

–40°C to +85°C cycles, 60 minutes per cycle

図 5-37. Multiple Temperature Cycle Hysteresis

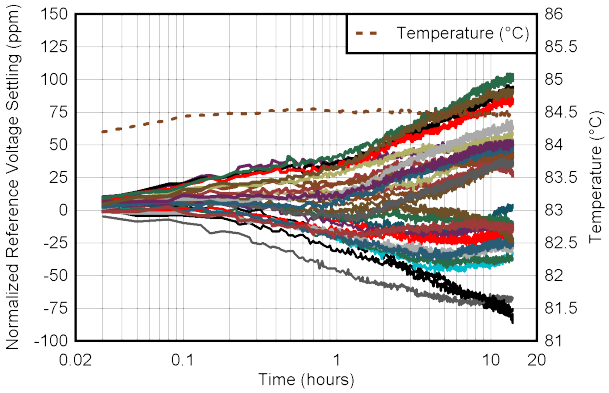

Two minutes after 25°C to 85°C temperature step, 30 units

図 5-38. Ambient Temperature Change Settling

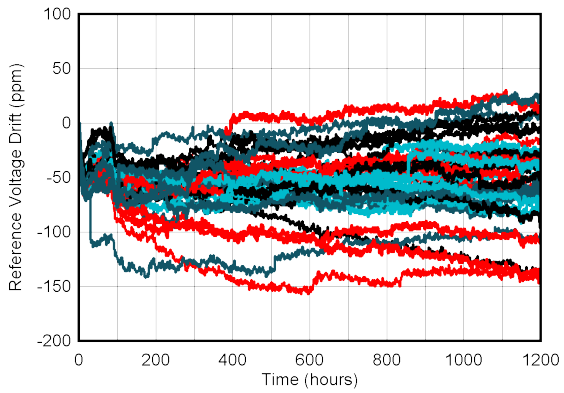

30 units

図 5-39. Reference Voltage Long-Term Stability

Copyright © 2024 Texas Instruments Incorporated

5.10 Typical Characteristics: Reference (continued)

at T_A = 25°C, PVDD = IOVDD = 3.3 V, external or internal VREFIO = 1.25 V, R_{LOAD} = 50 kΩ to GND, C_{LOAD} = 100 pF to GND, and digital inputs at IOVDD or GND (unless otherwise noted)

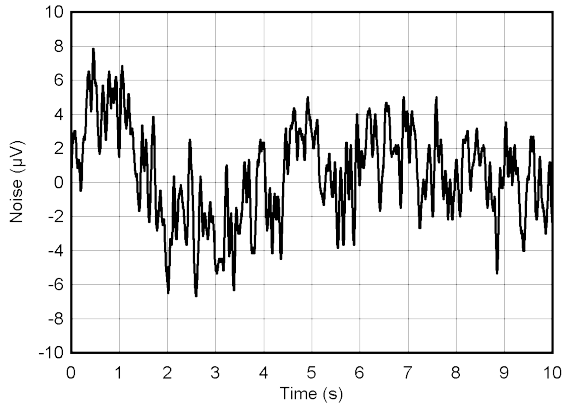

図 5-40. Reference Output Noise, 0.1 Hz to 10 Hz

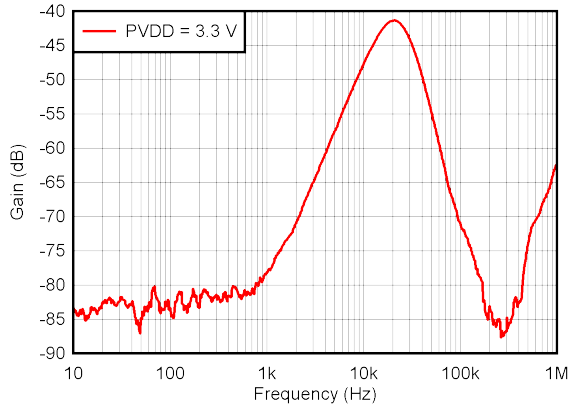

図 5-41. Reference AC PSRR vs frequency

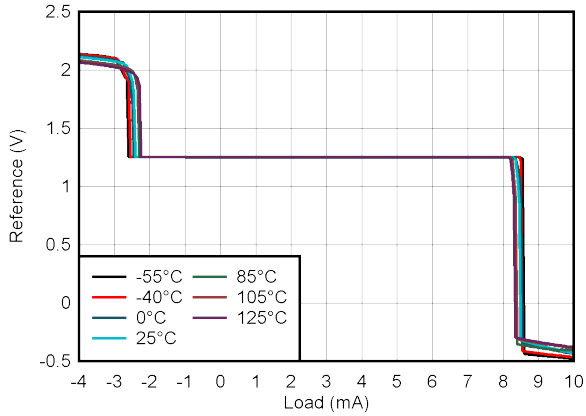

図 5-42. Reference Source and Sink Current Capability

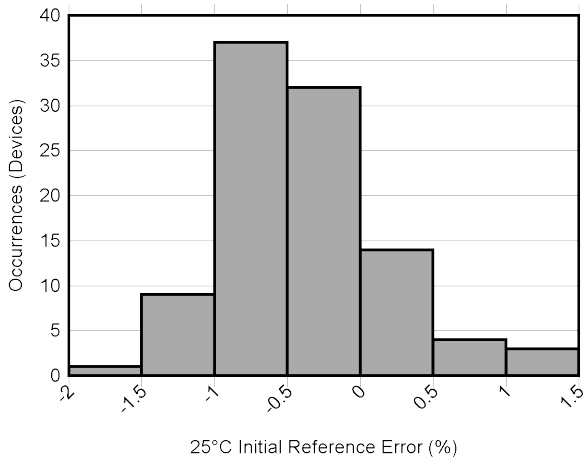

図 5-43. Initial Accuracy Distribution

5.11 Typical Characteristics: Power Supply

at T_A = 25°C, PVDD = IOVDD = 3.3 V, internal VREFIO, R_{LOAD} = 50 kΩ to GND, C_{LOAD} = 100 pF to GND, and digital inputs at IOVDD or GND (unless otherwise noted)

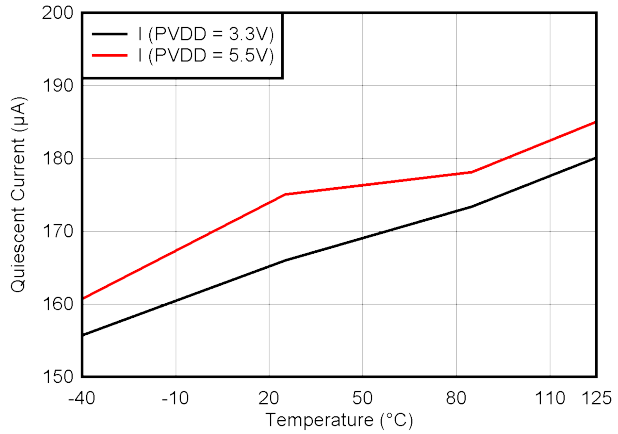

図 5-44. PVDD Supply Current vs Temperature

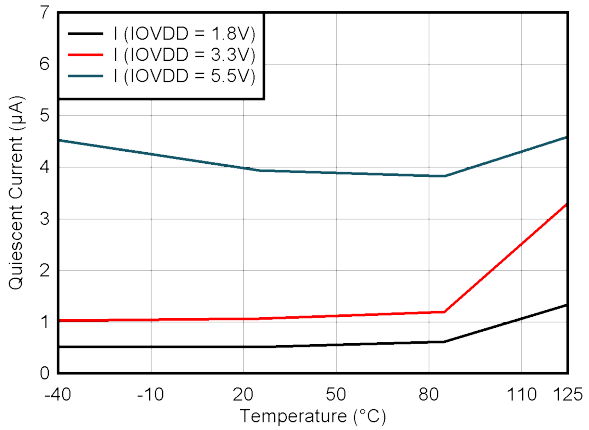

図 5-45. IOVDD Supply Current vs Temperature

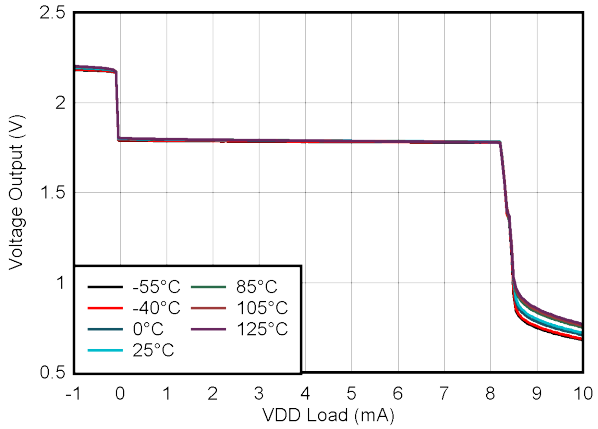

図 5-46. VDD Voltage vs Load Current

Copyright © 2024 Texas Instruments Incorporated

6 Detailed Description

6.1 Overview

The AFEx8201 feature a 16-bit (AFE88201) or 14-bit (AFE78201) string DAC with voltage output buffer. Both devices have a buffered voltage output and are designed for use in three-wire or four-wire sensor transmitters or analog output modules. The DAC has calibration registers for setting gain and offset values for adjusting the DAC outputs. The DAC also has different output slewing modes that allow for a programmable linear slew and a sinusoidal shaped output slew.

The AFEx8201 also feature a 12-bit SAR ADC that can be multiplexed to measure different inputs, including external nodes and internal nodes for diagnostic measurements on the device. The ADC is capable of making direct-mode measurements with on-demand conversions or auto-mode measurements through continuous conversions using a channel sequencer with a multiplexer. The devices have optional alarm configurations with fault detection and alarm actions.

Device communication and programming are done through an SPI or through the UART break mode (UBM). With the SPI, a cyclic redundancy check (CRC) is implemented by default, which can be disabled. Additionally, communications can be monitored with a watchdog timer (WDT) that alerts the user if the device becomes unresponsive to periodic communication.

The AFEx8201 feature a 1.25-V, onboard precision voltage reference, and an integrated precision oscillator.

Throughout this data sheet, register and bit names are combined with a period to use the following format: <register_name>.<bit_name>. For example, the CLR bit in the DAC_CFG register is labeled DAC_CFG.CLR.

6.2 Functional Block Diagram

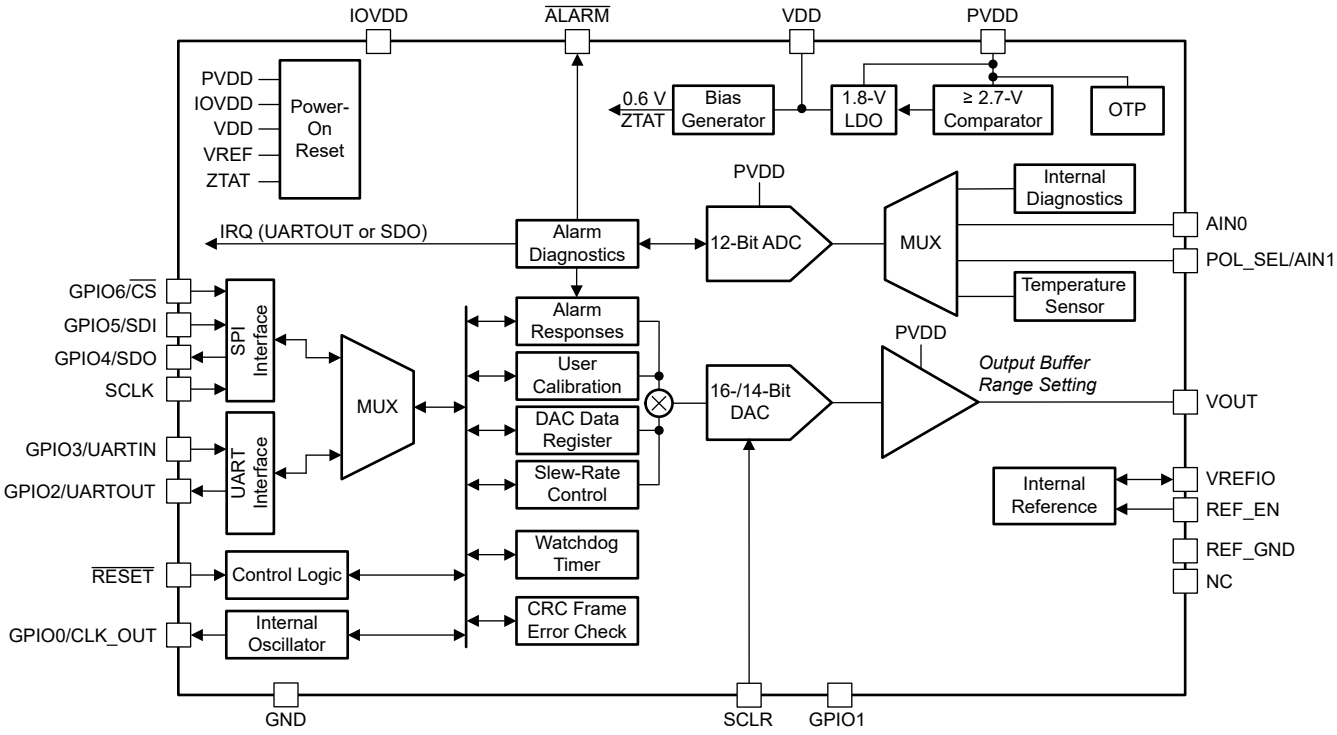

6.3 Feature Description

6.3.1 Digital-to-Analog Converter (DAC) Overview

The AFEx8201 feature a 16-bit (AFE88201) or 14-bit (AFE78201) string DAC followed by an output voltage buffer. Using an external circuit, the device output voltage can be translated to different output voltages and output currents for use in 3-wire or 4-wire sensor transmitters or analog output modules. The DAC is configured to support a 0-V to 2.5-V range of operation. The alarm function is triggered when PVDD exceeds the valid configuration range of 2.7 V to 5.5 V; see also 表 6-5.

6.3.1.1 DAC Resistor String

図 6-1 shows that the resistor string structure consists of a series of resistors, each of value R. The code loaded to the DAC determines the node on the string at which the voltage is tapped off to be fed into the output amplifier. The voltage is tapped off by closing one of the switches connecting the string to the amplifier. The resistor string architecture has inherent monotonicity, voltage output, and low glitch.

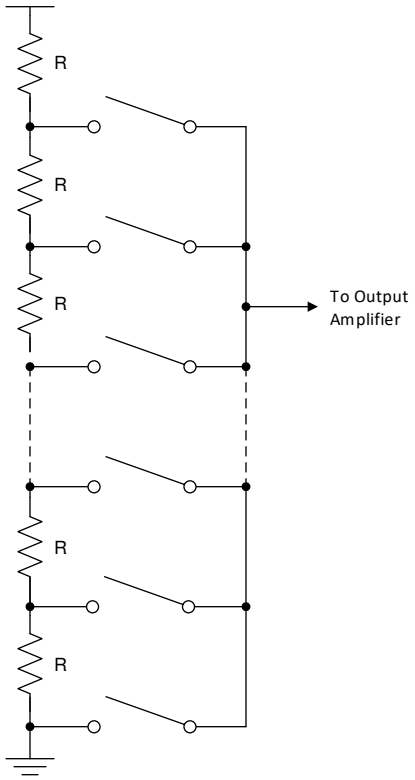

図 6-1. DAC Resistor String

6.3.1.2 DAC Buffer Amplifier

The VOUT output pin is driven by the DAC output buffer amplifier. The output amplifier default settings are designed to drive capacitive loads as high as 100 pF without oscillation. The output buffer is able to source and sink 1 mA. The device implements short-circuit protection for momentary output shorts to ground and VDD supply. The source and sink short-circuit current thresholds are set to 5 mA.

Copyright © 2024 Texas Instruments Incorporated

6.3.1.3 DAC Transfer Function

The following equation describes the DAC transfer function, which is the relationship between internal signal DAC_CODE and output voltage VOUT:

$$\mathrm{VOUT} = \frac{\mathrm{DAC_CODE}}{2^{\mathrm{N}}} \times \mathrm{FSR} \tag{1}$$

where

- DAC_CODE is an internal signal and the decimal equivalent of the gain and offset calibrated binary code loaded into the DAC_DATA register. DAC_CODE range = 0 to 2^N – 1.
- N = DAC_CODE resolution in bits (16 for the AFE88201 and 14 for the AFE78201).
- FSR = VOUT full-scale range = 2.5 V.

6.3.1.4 DAC Gain and Offset Calibration

The AFEx8201 provide DAC gain and offset calibration capability to correct for end-point errors present in the system. Implement the gain and offset calibration using two registers, DAC_GAIN.GAIN and DAC_OFFSET.OFFSET. Update DAC_DATA register after gain or offset codes are changed for the new values to take effect. The DAC_GAIN can be programmed from 0.5 to 1.499985 using 式 2.

$$\mathrm{DAC_GAIN} = \frac{1}{2} + \frac{\mathrm{GAIN}}{2^{\mathrm{N}}} \tag{2}$$

where

- N = DAC_GAIN resolution in bits: 16 for the AFE88201 and 14 for the AFE78201.
- GAIN is the decimal value of the DAC_GAIN register setting.
- GAIN data are left justified; the last two LSBs in the DAC_GAIN register are ignored for the AFE78201.

The example DAC_GAIN settings for the AFE88201 are shown in 表 6-1.

表 6-1. DAC_GAIN Setting vs GAIN Code

DAC_GAIN	GAIN (HEX)
0.5	0x0000
1.0	0x8000
1.499985	0xFFFF

The DAC_OFFSET is stored in the DAC_OFFSET register using 2's-complement encoding. The DAC_OFFSET value can be programmed from $-2^{(N-1)}$ to $2^{(N-1)} - 1$ using 式 3.

$$\mathrm{DAC_OFFSET} = -\mathrm{OFFSET}_{\mathrm{MSB}} \times 2^{(\mathrm{N}-1)} + \sum_{\mathrm{i}=0}^{(\mathrm{N}-2)} \mathrm{OFFSET}_{\mathrm{i}} \times 2^{\mathrm{i}} \tag{3}$$

where

- N = DAC_OFFSET resolution in bits: 16 for the AFE88201 and 14 for the AFE78201.
- $\mathrm{OFFSET}_{\mathrm{MSB}}$ = MSB bit of the DAC_OFFSET register.
- OFFSET_{i} = The rest of the bits of the DAC_OFFSET register.
- *i* = Position of the bit in the DAC_OFFSET register.
- OFFSET data are left justified; the last two LSBs in the DAC_OFFSET register are ignored for the device.

The most significant bit determines the sign of the number and is called the sign bit. The sign bit has the weight of $-2^{(N-1)}$ as shown in 式 3.

The example DAC_OFFSET settings for the AFE88201 are shown in 表 6-2.

表 6-2. DAC_OFFSET Setting vs OFFSET Code

DAC_OFFSET	OFFSET (HEX)
32767	0x7FFF
1	0x0001
0	0x0000
–1	0xFFFF
–2	0xFFFE
–32768	0x8000

The following transfer function is applied to the DAC_DATA.DATA based on the DAC_GAIN and DAC_OFFSET values:

$$\text{DAC_CODE} = (\text{DATA} \times \text{DAC_GAIN}) + \text{DAC_OFFSET} \tag{4}$$

where

- DAC_CODE is the internal signal applied to the DAC.
- DATA is the decimal value of the DAC_DATA register.
- DAC_GAIN and DAC_OFFSET are the user calibration settings.
- DATA data are left justified; the last two LSBs in the DAC_DATA register are ignored for the AFE78201.

Substituting DAC_GAIN and DAC_OFFSET in 式 4 with 式 2 and 式 3 results in:

$$\text{DAC_CODE} = \left(\text{DATA} \times \left[\frac{1}{2} + \frac{\text{GAIN}}{2^{N}}\right]\right) - \text{OFFSET}_{\text{MSB}} \times 2^{(N-1)} + \sum_{i=0}^{(N-2)} \text{OFFSET}_i \times 2^i \tag{5}$$

The multiplier is implemented using truncation instead of rounding. This truncation can cause a difference of one LSB if rounding is expected. 図 6-2 shows the DAC calibration path.

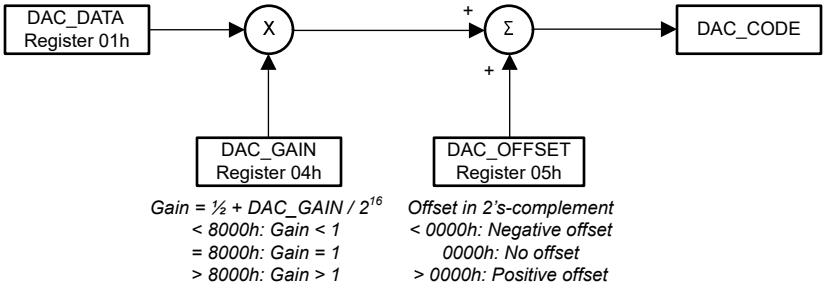

図 6-2. DAC Calibration Path

6.3.1.5 Programmable Slew Rate

The slew rate feature controls the rate at which the output voltage or current changes. This feature is disabled by default and is enabled by writing a logic 1 to the DAC_CFG.SR_EN bit. With the slew rate control feature disabled, the output changes smoothly at a rate limited by the output drive circuitry and the attached load.

With this feature enabled, the output does not slew directly between the two values. Instead, the output steps digitally at a rate defined by DAC_CFG.SR_STEP[2:0] and DAC_CFG.SR_CLK[2:0]. SR_CLK defines the rate at which the digital slew updates. SR_STEP defines the amount by which the output value changes at each update. The register descriptions show different settings for SR_STEP and SR_CLK.

Copyright © 2024 Texas Instruments Incorporated

The time required for the output to slew is expressed as 式 6:

$$\text{Slew Time} = \frac{\text{Delta Code Change}}{\text{Slew Step} \times \text{Slew Clock Rate}} \tag{6}$$

where

- *Slew Time* is expressed in seconds
- *Slew Step* is controlled by DAC_CFG.SR_STEP
- *Slew Clock Rate* is controlled by DAC_CFG.SR_CLK

When the slew-rate control feature is enabled, the output changes at the programmed slew rate. This configuration results in a staircase formation at the output. If the clear code is asserted (see セクション 6.3.1.6), the output slews to the DAC_CLR_CODE value at the programmed slew rate. When new DAC data are written, the output starts slewing to the new value at the slew rate determined by the current DAC code and the new DAC data.

Two slew-rate control modes are available: linear (default) and sinusoidal. 図 6-3 and 図 6-4 show the typical rising and falling DAC output waveforms, respectively.

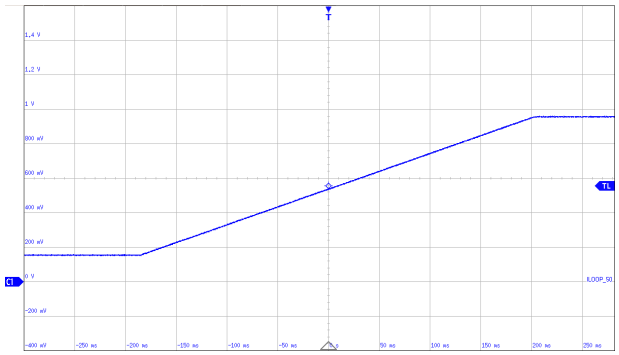

4 mA (0x0BA3) to 24 mA (0xF45D) measured on a 40-Ω shunt

図 6-3. Linear Slew Rate: Rising

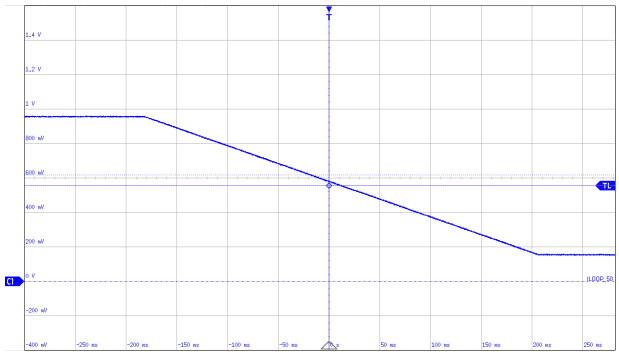

24 mA (0xF45D) to 4 mA (0x0BA3) measured on 40-Ω shunt

図 6-4. Linear Slew Rate: Falling

Sinusoidal mode enables fast DAC settling while improving analog rate of change characteristics. Sinusoidal mode is selected by the DAC_CFG.SR_MODE bit. 図 6-5 and 図 6-6 show the typical rising and falling DAC output waveforms with sinusoidal slew-rate control, respectively.

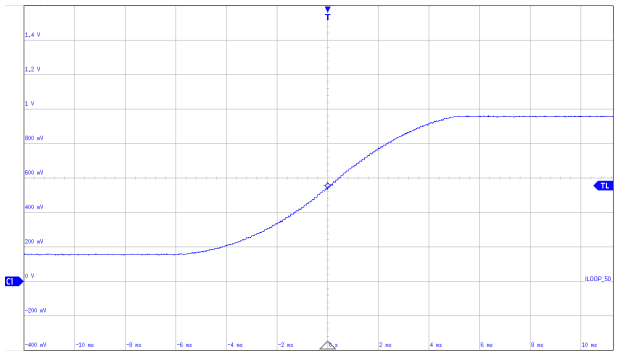

4 mA (0x0BA3) to 24 mA (0xF45D) measured on a 40-Ω shunt

図 6-5. Sinusoidal Slew Rate: Rising

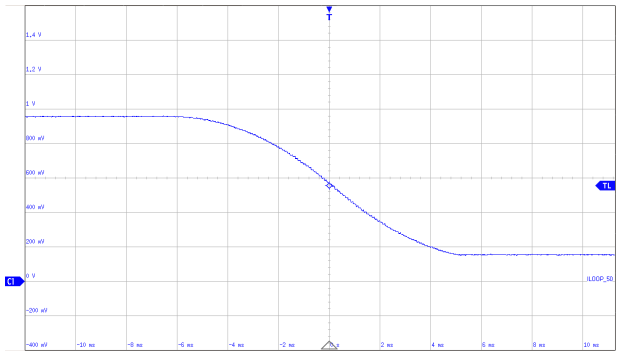

24 mA (0xF45D) to 4 mA (0x0BA3) measured on a 40-Ω shunt

図 6-6. Sinusoidal Slew Rate: Falling

If the slew-rate feature is disabled while the DAC is executing the slew-rate command, the slew-rate operation is aborted, and the DAC output goes to the target code.

Copyright © 2024 Texas Instruments Incorporated

6.3.1.6 DAC Register Structure and CLEAR State

The AFE88201 DAC has a 16-bit voltage output, and the AFE78201 DAC has a 14-bit voltage output. The output range is 0 V to 2.5 V.

The AFEx8201 provide the option to quickly set the DAC output to the value set in the DAC_CLR_CODE register without writing to the DAC_DATA register, referred to as the CLEAR state. For register details, see 表 7-6.

Transitioning from the DAC_DATA to the DAC_CLR_CODE is synchronous to the clock. If slew mode is enabled, the output slews during the transition. 図 6-7 shows the full AFEx8201 DAC_DATA signal path. The devices synchronize the DAC_DATA code to the internal clock, causing up to 2.5 internal clock cycles of latency (2 µs) with respect to the rising edge of $\overline{CS}$ or the end of a UBM command. Update DAC_GAIN and DAC_OFFSET values when DAC_CFG.SR_EN = 0 to avoid an IRQ pulse generated by SR_BUSY.

Set the DAC to CLEAR state either by:

1. Setting DAC_CFG.CLR.
2. Configuring the DAC to transition to the CLEAR state in response to an alarm condition.
3. Using the SDI pin in UBM or the SCLR pin in SPI mode as the CLEAR state input pin.

Method 1 is a direct command to the AFEx8201 to set the DAC to CLEAR state. Set the DAC_CFG.CLR bit to 1h to set the DAC to CLEAR state.

Method 2 is controlled by settings of ALARM_ACT register. For details of conditions and other masks required to use this method, see 表 7-15 and セクション 6.3.3.2.

Method 3 supports setting the DAC to CLEAR state without writing to the AFEx8201. This pin-based DAC CLEAR state function is available in SPI mode on the SCLR pin, or in UBM on the SDI pin. The SCLR pin must be tied to GND in UBM. For details of connection options based on communication modes and pins used in each mode, see セクション 6.5.1. Set the appropriate pin high to drive the DAC to CLEAR state.

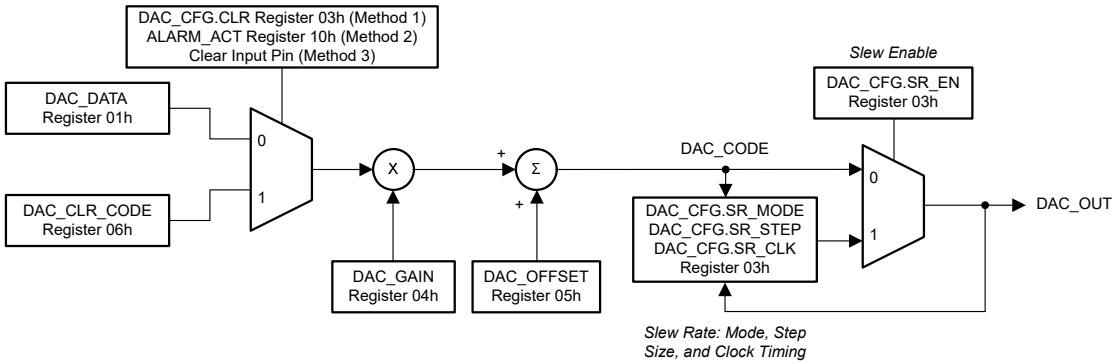

図 6-7. DAC Data Path

6.3.2 Analog-to-Digital Converter (ADC) Overview

The AFEx8201 feature a monitoring system centered on a 12-bit successive approximation register (SAR) ADC and a highly flexible analog multiplexer. The monitoring system is capable of sensing up to two external inputs, as well as several internal device signals.

The ADC uses the VREFIO pin voltage as a reference. The ADC timing signals are derived from an on-chip oscillator. The conversion results are accessed through the device serial interface.

6.3.2.1 ADC Operation

The device ADC supports direct-mode and auto-mode conversions. Both conversion modes use a custom channel sequencer to determine which of the input channels are converted by the ADC. The sequence order is fixed. The user selects the start channel and stop channel of the conversion sequence. The conversion method and channel sequence are specified in the ADC Configuration registers. The default conversion method is auto-mode. 図 6-8 shows the ADC conversion sequence.

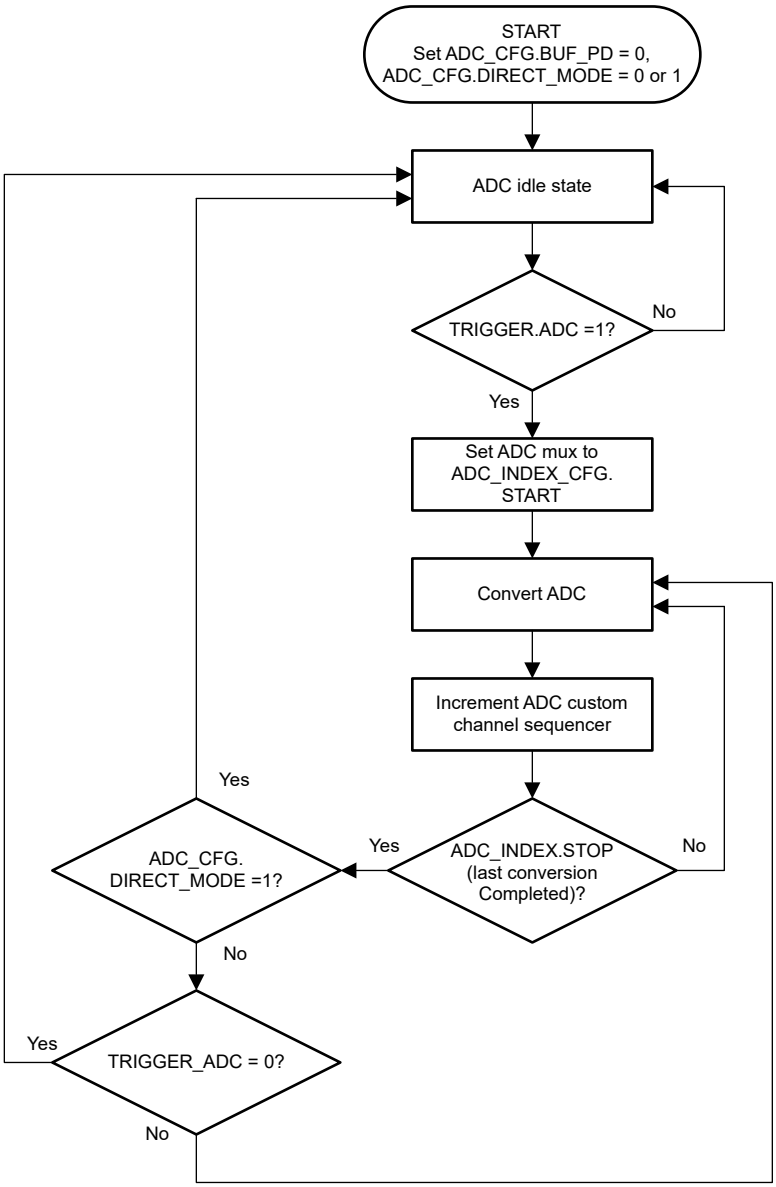

図 6-8. ADC Conversion Sequence

Copyright © 2024 Texas Instruments Incorporated

To use the ADC, first enable the ADC buffer by setting ADC_CFG.BUF_PD = 0. Then wait at least 210 µs before setting the trigger using the TRIGGER.ADC bit. An internal delay is forced if the trigger signal is sent before the timer has expired. Make sure the ADC is not converting before setting the ADC_CFG.BUF_PD = 1. If ADC_CFG.BUF_PD is set to 1 while the ADC is still converting, the internal timer delays this command. When the timer expires, the enable signal for the ADC is cleared, and the current conversion finishes before powering down the ADC and the ADC Buffer.

A trigger signal must occur for the ADC to exit the idle state. The ADC trigger is generated through the TRIGGER.ADC bit. The ADC data registers have the latest available data. Accessing the data registers does not interfere with the conversion process, and thus provides continuous ADC operation.

In direct-mode conversion, the selected ADC input channels are converted on demand by issuing an ADC trigger signal. After the last enabled channel is converted, the ADC enters the idle state and waits for a new trigger. Read the results of the ADC conversion through the register map. Direct-mode conversion is typically used to gather the ADC data of any of the data channels. In direct-mode, use the ADC_BUSY bit to determine when a direct-mode conversion is complete and the ADC has returned to the idle state. Direct mode is set by writing ADC_CFG.DIRECT_MODE = 1.

In auto-mode conversion, the selected ADC input channels are converted continuously. The conversion cycle is initiated by issuing an ADC trigger. Upon completion of the first conversion sequence, another sequence is automatically started. Conversion of the selected channels occurs repeatedly until the auto-mode conversion is stopped by clearing the ADC trigger signal. Auto-mode conversion is not typically used to gather the ADC data. Instead, auto-mode conversions are used in combination with upper and lower ADC data thresholds to detect when the data has exceeded the programmable out-of-range alarm thresholds. Auto mode is set by writing ADC_CFG.DIRECT_MODE = 0.

Regardless of the selected conversion method, update the ADC configuration register only while the ADC is in the idle state. Do not change the ADC configuration bits while the ADC is converting channels. Before changing configuration bits, disable the ADC and verify that GEN_STATUS.ADC_BUSY = 0.

Copyright © 2024 Texas Instruments Incorporated

6.3.2.2 ADC Custom Channel Sequencer

The device uses a custom channel sequencer to control the multiplexer of the ADC. The ADC sequencer allows the user to specify which channels are converted. The sequencer consists of 16 indexed slots with programmable start and stop index fields to configure the start and stop conversion points.

In direct-mode conversion, the ADC converts from the start index to the stop index once and then stops. In auto-mode conversion, the ADC converts from the start to stop index repeatedly until the ADC is stopped. 図 6-9 shows the indexed custom channel sequence slots available in the device.

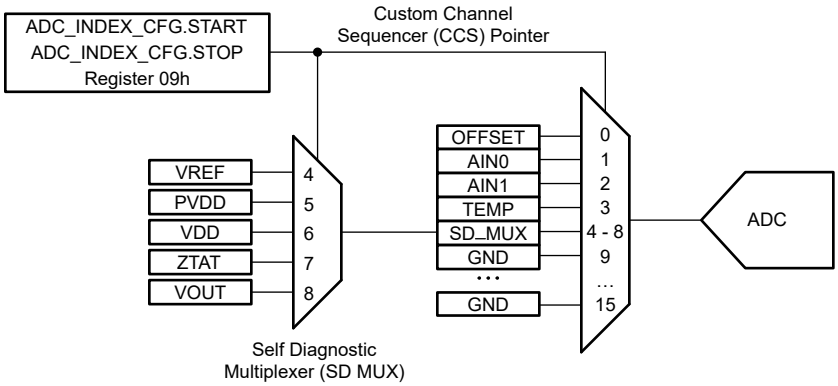

図 6-9. ADC MUX Control

表 6-3 lists the ADC input channel assignments for the sequencer.

表 6-3. Indexed Custom Channel Sequence

CCS POINTER	CHANNEL	CONV_RATE	RANGE
0	OFFSET	2560 Hz	VREF
1	AIN0	Programmable	Programmable
2	AIN1	Programmable	Programmable
3	TEMP	2560 Hz	VREF
4	SD0 (VREF)	2560 Hz	VREF
5	SD1 (PVDD)	2560 Hz	VREF
6	SD2 (VDD)	2560 Hz	VREF
7	SD3 (ZTAT)	2560 Hz	VREF
8	SD4 (VOUT)	2560 Hz	2 × VREF
9-15	GND	2560 Hz	VREF

Use the ADC_INDEX_CFG register to select the channels. The order of the channels is fixed and shown in 表 6-3. Then, use ADC_INDEX_CFG.START and ADC_INDEX_CFG.STOP to select the range of indices to convert. If these two values are the same, then the ADC only converts a single channel. If the START and STOP values are different, then the ADC cycles through the corresponding indices. By default, all channels are configured to be converted; START = 0 and STOP = 8. If the AIN1 channel is not configured as an ADC input, then the result for this channel is 0x000. The minimum time for a conversion is still allotted to AIN1 if the channel is within the START and STOP range. If START is configured to be greater than STOP, then the device interprets the conversion sequence as if START = STOP.

In direct mode, each selected channel in the ADC_INDEX_CFG register is converted once per TRIGGER.ADC command. In auto mode, each channel selected in the ADC_INDEX_CFG register is converted once; after the last channel, the loop is repeated as long as the ADC is enabled. In auto mode, writing to TRIGGER.ADC = 1 starts the conversions. Writing TRIGGER.ADC = 0 disables the ADC after the current channel being converted

Copyright © 2024 Texas Instruments Incorporated

finishes. In direct mode, writing TRIGGER.ADC = 1 starts the sequence. When the sequence ends, then TRIGGER.ADC is self-cleared.

A minimum of 20 clock cycles is required to perform one conversion. The ADC clock is derived from the internal oscillator and divided by 16, which gives an ADC clock frequency of 1.2288 MHz / 16 = 76.8 kHz, for a clock period = 13.02 µs.

Each of the internal nodes has a fixed conversion rate. Pins AIN0 and AIN1 have programmable conversion rates (see also the ADC_CFG register). Pins AIN0 and AIN1 also have a configurable range. The input range can be either 0 V to 1.25 V or 0 V to 2.5 V, depending on the ADC_CFG.RANGE bit.

If any ADC configuration bits are changed, the following sequence is recommended:

1. Disable the ADC
2. Wait for ADC_BUSY to go low
3. Change the configuration
4. Restart the conversions

ADC_BUSY can be monitored in the GEN_STATUS register.

If the ADC is configured for direct mode (ADC_CFG.DIRECT_MODE = 1), then after setting the desired channels to convert, write a 1 to TRIGGER.ADC. This bit is self-cleared when the sequence is finished converting. This command converts all the selected channels once. To initiate another conversion of the channels, send another TRIGGER.ADC command.

6.3.2.3 ADC Synchronization

The trigger signal must be generated for the ADC to exit the idle state and start conversions. The ADC trigger is generated through the TRIGGER.ADC bit. The ADC data registers have the latest available data. Accessing the data registers does not interfere with the conversion process, and thus provides continuous ADC operation.

In direct-mode, use the GEN_STATUS.ADC_BUSY bit to determine when a direct-mode conversion is complete, and the ADC has returned to the idle state. Similarly, monitor the TRIGGER.ADC bit to see if the ADC has returned to the idle state.

6.3.2.4 ADC Offset Calibration

Channel 0 of the CCS pointer is named OFFSET. The OFFSET channel is used to calibrate and improve the ADC offset performance. Convert the OFFSET channel, and use the result as a calibration for the ADC offset in subsequent measurements.

This ADC channel samples VREF / 2 and compares this result against 7FFh as a measure of the ADC offset. The data rate for the ADC measuring this channel is 2560 Hz. The ADC conversion for the OFFSET channel is subtracted from 7FFh and the resulting value is stored in ADC_OFFSET (28h). The offset can be positive or negative; therefore, the value is stored in 2's complement notation.

With the subtraction from 7FFh, ADC_OFFSET is the negative of the offset. This value is subtracted from conversions of the ADC by default. For direct measurements of the ADC, set ADC_BYP.OFST_BYP_EN to 1 to enable the offset bypass; see セクション 6.3.2.8.

6.3.2.5 External Monitoring Inputs

The AFEx8201 have two analog inputs for external voltage sensing. Channels 1 and 2 for the CCS pointer are for external monitoring inputs that can be measured by pins AIN0 and AIN1, respectively. The input range for the analog inputs is configurable to either 0 V to 1.25 V or 0 V to 2.5 V. The analog inputs conversion values are stored in straight binary format in the ADC registers. The ADC resolution can be computed by 式 7:

$$1\ LSB = \frac{V_{RANGE}}{2^{12}} \tag{7}$$

where

- V_{RANGE} = 2.5 V for the 0-V to 2.5-V input range or 1.25 V for the 0-V to 1.25-V input range.

図 6-10 and 表 6-4 detail the transfer characteristics.

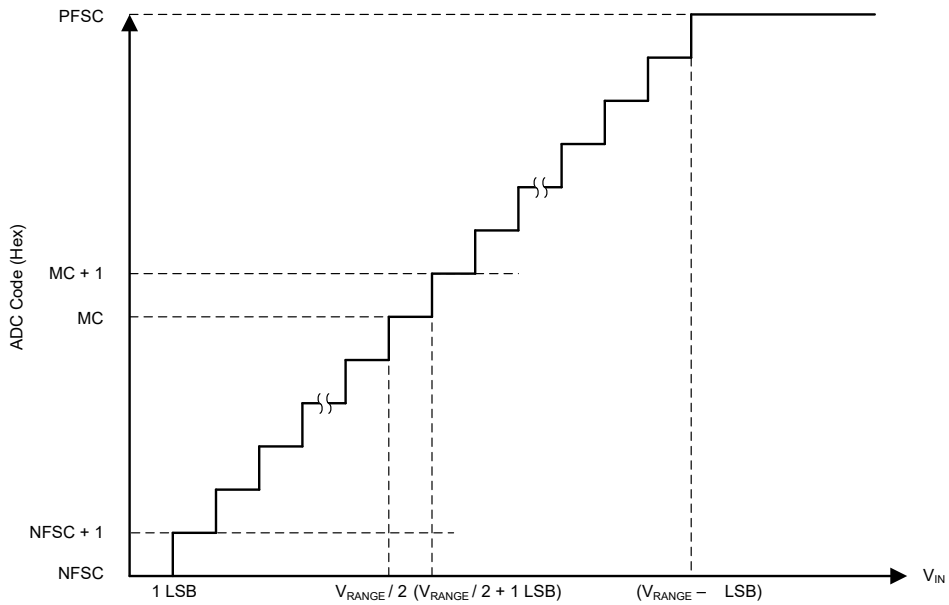

図 6-10. ADC Transfer Characteristics

表 6-4. Transfer Characteristics

INPUT VOLTAGE	CODE	DESCRIPTION	IDEAL OUTPUT CODE
≤1 LSB	NFSC	Negative full-scale code	000
1 LSB to 2 LSB	NFSC + 1	Negative full-scale code plus 1	001
(V_{RANGE} / 2) to (V_{RANGE} / 2) + 1 LSB	MC	Midcode	800
(V_{RANGE} / 2) + 1 LSB to (V_{RANGE} / 2) + 2 LSB	MC + 1	Midcode plus 1	801
≥ V_{RANGE} – 1 LSB	PFSC	Positive full-scale code	FFF

For these external monitoring inputs, the ADC is configurable for both data rate and voltage range. The data rate is set to either 640 Hz, 1280 Hz, 2560 Hz, or 3840 Hz with the ADC_CFG.CONV_RATE bits. The range of the ADC measurement is set with the ADC_CFG.AIN_RANGE bit. The ADC range is 2 × VREF when the bit = 0; the ADC range is VREF when the bit = 1.

When the ADC conversion is completed for AIN0 and AIN1, the resulting ADC data are stored in the ADC_AIN0.DATA and ADC_AIN1.DATA bits at 24h and 25h of the register map.

If the external monitoring inputs are not used, connect the AIN0 and AIN1 pins to GND through a 1-kΩ resistor.

Copyright © 2024 Texas Instruments Incorporated

6.3.2.6 Temperature Sensor

Channel 3 of the CCS is used to measure the die temperature of the device. The ADC measures an internal temperature sensor that measures a voltage complementary to the absolute temperature (CTAT). This CTAT voltage has a negative temperature coefficient. The ADC converts this voltage at a data rate of 2560 Hz. When the ADC conversion is completed, the data are found in the ADC_TEMP.DATA bits (address 26h).

The relationship between the ambient temperature and the ADC code is shown in 式 8:

$$\text{ADC Code} = 2681 - 11 \times T_A(°C) \tag{8}$$

6.3.2.7 Self-Diagnostic Multiplexer

In addition to the ADC offset, the two external monitoring inputs, and the temperature sensor, the ADC of the AFEx8201 has five other internal inputs to monitor the reference voltage, the power supplies, a static voltage, and the DAC output. These five voltages measurements are part of the self-diagnostic multiplexer (SD0 to SD4) measurements of the ADC, and are reported in the ADC_SD_MUX register at 27h; see also セクション 7.

Channel 4 (SD0) measures the reference voltage of the device. The ADC measures the reference voltage through a resistor divider (divide by two). Be aware that all ADC measurements are a function of the reference; using SD0 to measure the reference is not revealing as a diagnostic measurement. The data rate for this conversion is 2560 Hz and the range of the ADC is set to VREF.

Channel 5 (SD1) measures the PVDD power supply of the device. The ADC measures the PVDD voltage through a resistor divider (divide by six). The data rate for this conversion is 2560 Hz and the range of the ADC is set to VREF.

Channel 6 (SD2) measures the VDD power supply of the device. When channel 6 is selected, the ADC measures the VDD voltage through a resistor divider (divide by 2). The data rate for this conversion is 2560 Hz and the range of the ADC is set to VREF.

Channel 7 (SD3) is a ZTAT (zero temperature coefficient) voltage. This internal voltage is nominally 0.6 V with a low temperature drift and does not depend on the reference voltage. An ADC measurement of ZTAT voltage can be useful to determine the state of the reference voltage. The data rate for this conversion is 2560 Hz and the range of the ADC is set to VREF.

Channel 8 (SD4) measures the VOUT of the DAC. The ADC measures the VOUT voltage through a resistor divider (divide by two). The data rate for this conversion is 2560 Hz and the range of the ADC is set to 2 × VREF.

6.3.2.8 ADC Bypass

To test the offset, modify the ADC data path by programming the bypass data register, ADC_BYP.DATA (2Eh). This read/write register is used in two different ways.

First, by setting the ADC_BYP.OFST_BYP_EN to 1, this bypass data register is used as a substitute for the ADC_OFFSET. However, if the ADC_BYP.DATA data must be stored in the ADC_OFFSET register, use the second method.

Second, the ADC_BYP.DATA is used to set a known value into the ADC readback register of the channel being converted. Write the desired data into ADC_BYP.DATA, set the ADC_BYP.DATA_BYP_EN bit, and convert the selected channel. When ADC_BYP.DATA_BYP_EN bit is set to 1, the ADC conversion is bypassed, and the value of ADC_BYP.DATA is written into the selected ADC channel readback register. This setting is used to test the alarm settings of the ADC.

When the ADC bypass is unused, set the ADC_BYP.DATA to 000h.

図 6-11 shows the ADC bypass data flow.

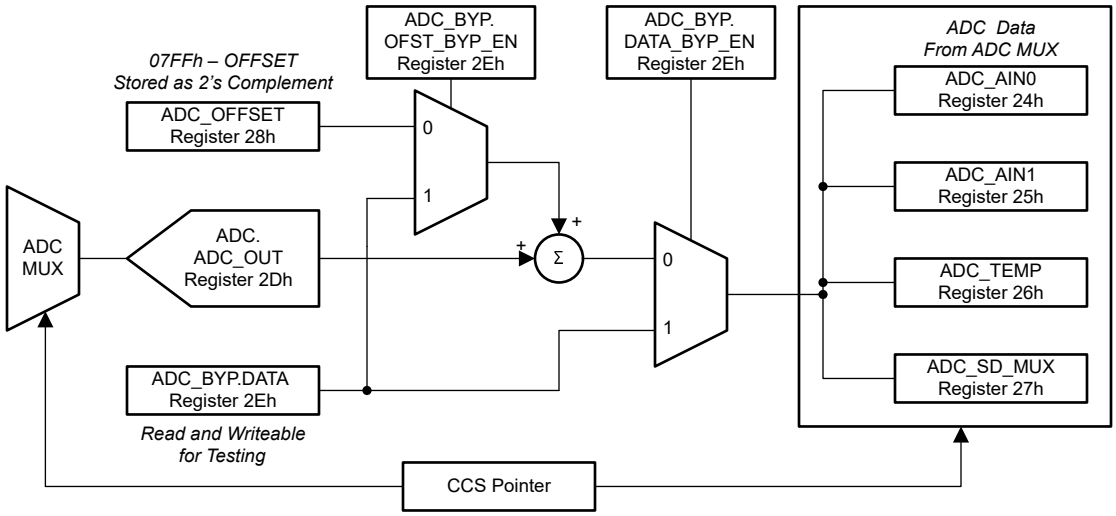

図 6-11. ADC Bypass Data Flow

6.3.3 Programmable Out-of-Range Alarms

The AFEx8201 are capable of continuously analyzing the supplies, external ADC inputs, DAC output voltage, reference, internal temperature, and other internal signals for normal operation.

Normal operation for the conversion results is established through the lower- and upper-threshold registers. When any of the monitored inputs are out of the specified range, the corresponding alarm bit in the alarm status registers is set.

The alarm bits in the alarm status registers are latched. The alarm bits are referred to as being latched because the alarm bits remain set until read by software. This design makes sure that out-of-limit events cannot be missed if the software is polling the device periodically. All bits are cleared when reading the alarm status registers, and all bits are reasserted if the out-of limit condition still exists on the next monitoring cycle. When the alarm event is cleared, the DAC is reloaded with the contents of the DAC active registers, which allows the DAC outputs to return to the previous operating point without any additional commands

All alarms can be used to generate a hardware interrupt signal on the $\overline{\text{ALARM}}$ pin; see also セクション 6.3.3.1. In addition, セクション 6.3.3.2 describes how the alarm action can be individually configured for each alarm.

Copyright © 2024 Texas Instruments Incorporated

6.3.3.1 Alarm-Based Interrupts

One or more of the available alarms can be set to activate the $\overline{\text{ALARM}}$ pin. Connect the $\overline{\text{ALARM}}$ pin as an optional hardware interrupt to the host. The host can query the alarm status registers to determine the alarm source upon assertion of the interrupt. Any alarm event activates the pin, as long as the alarm is not masked in the ALARM_STATUS_MASK register. When an alarm event is masked, the occurrence of the event sets the corresponding status bit in the alarm status registers, but does not activate the $\overline{\text{ALARM}}$ pin.

注

The $\overline{\text{ALARM}}$ pin output depends on ALARM_STATUS and ALARM_STATUS_MASK register settings, independent of ALARM_ACT register settings.

6.3.3.2 Alarm Action Configuration Register

The AFEx8201 provides an alarm action configuration register: ALARM_ACT, 表 7-15. Writing to this register selects the device action that automatically occurs for a specific alarm condition. The ALARM_ACT register determines how the main DAC responds to an alarm event from either an ADC conversion on the self-diagnostics channels (AIN0, AIN1, and TEMP), or from a CRC, WDT, VREF, TEMP_HI, or TEMP_LO fault. Only these faults cause a response by the DAC. Any other alarm status events trigger the $\overline{\text{ALARM}}$ pin. There are four options for alarm action. In case different settings are selected for different alarm conditions, the following low-to-high priority is considered when taking action:

- 0. → No action
- 1. → DAC CLEAR state
- 2. → VOUT alarm voltage
- 3. → VOUT Hi-Z

If option 1 is selected when the alarm event occurs, then the DAC is forced to the clear code. This operation is done by controlling the input code to the DAC.

If option 2 is selected when the alarm event occurs, then VOUT is forced to the alarm voltage. The alarm voltage is controlled by either pin or register bit. If SPECIAL_CFG.AIN1_ENB = 0, then the AIN1 pin controls alarm polarity. Also, register bit SPECIAL_CFG.ALMV_POL can be used. If either of these signals = 1, then the alarm voltage is high; otherwise, the alarm voltage is low. The SPECIAL_CFG register is only reset with POR, so the user setting remains intact through hardware or software resets.

If option 3 is selected when the alarm event occurs, then the VOUT buffer is put into Hi-Z. If multiple events occur, then the highest setting takes precedence. Option 3 has the highest priority.

To disable action response to an alarm, set the corresponding bits in ALARM_ACT to 0h. Alarm action response is cleared either when the triggered condition bit resets (behavior depends on whether the fault bit in ALARM_STATUS is sticky or not), or by changing the action configuration to 0h.

注

An alarm action, as configured, executes when an alarm occurs depending on ALARM_STATUS and ALARM_ACT registers. Action response is independent of ALARM_STATUS_MASK settings.

6.3.3.3 Alarm Voltage Generator

図 6-12 shows that the alarm voltage is generated independently from the DAC output voltage. The alarm polarity control logic selects the output level of the alarm voltage generator. The alarm action control logic selects between the DAC output and alarm voltage generator output voltages. The alarm action control logic also controls the output buffer Hi-Z switch.

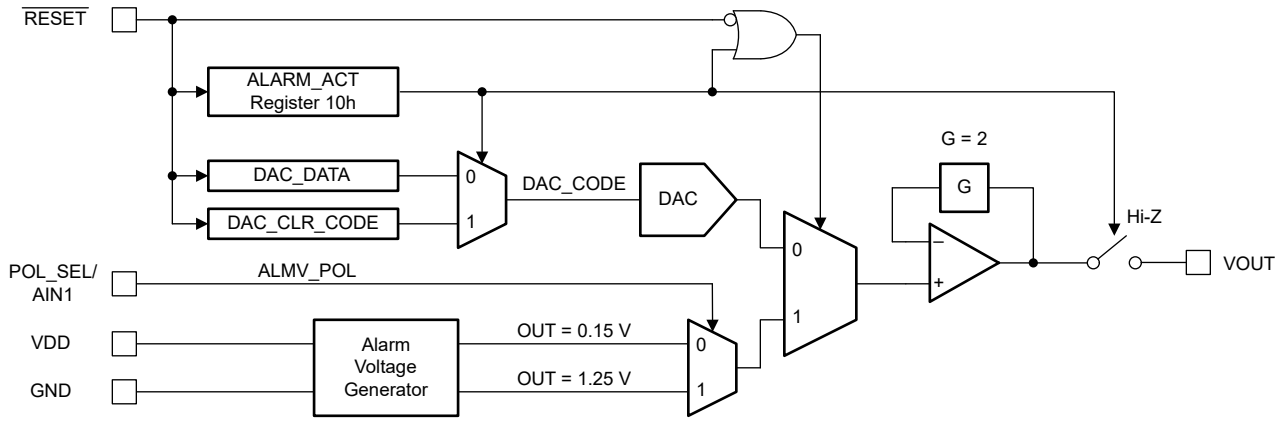

図 6-12. Alarm Voltage Generator Architecture

During normal operation, the expected VOUT voltage depends on the DAC_CODE. The ADC thresholds for the SD4 (VOUT) diagnostic channel are set around the programmed DAC_CODE. During the alarm condition, if the alarm action changes the VOUT voltage to the alarm voltage, or switches the VOUT buffer into Hi-Z mode, the VOUT voltage no longer depends on the DAC_CODE. In this case, the SD4 (VOUT) diagnostic channel also reports the alarm. To clear this alarm, as long as all other alarm conditions are cleared, set the alarm action to either no action or to the DAC clear code. Applying either alarm action sets the VOUT voltage within the expected ADC thresholds and clears the alarm after the next ADC measurement of the SD4 (VOUT) channel.

Give special consideration to the alarm logic during the transient events. When the new DAC_CODE goes beyond the SD4 (VOUT) alarm thresholds with the ADC monitoring the SD4 (VOUT) input in auto mode, the ADC conversion can occur while VOUT settles to a new value. This conversion can trigger a false alarm. There are two ways to prevent this false alarm:

1. Use direct mode and allow VOUT to settle before triggering the next ADC conversion.
2. Set ADC_CFG.FLT_CNT > 0. With this configuration, a single error in SD4 or any other measurement does not cause an alarm condition to be asserted.

6.3.3.4 Temperature Sensor Alarm Function

The AFEx8201 continuously monitor the internal die temperature. In addition to the ADC measurement, the temperature sensor triggers a comparator to show a thermal warning and a thermal error. A thermal warning alarm is set when the temperature exceeds 85°C. Additionally, a thermal error alarm is set when the die temperature exceeds 130°C.

The thermal warning and thermal error alarms can be configured to set the $\overline{\text{ALARM}}$ pin and are indicated in the ALARM_STATUS register. These alarms can be masked with the ALARM_MASK register and also be configured to control the DAC output with the ALARM_ACT register.

6.3.3.5 Internal Reference Alarm Function

The devices provide out-of-range detection for the reference voltage. When the reference voltage exceeds ±5% of the nominal value, the reference alarm flag (VREF_FLT bit) is set. Make sure that a reference alarm condition has not been issued by the device before powering up the DAC output.

Copyright © 2024 Texas Instruments Incorporated

6.3.3.6 ADC Alarm Function

The AFEx8201 provide independent out-of-range detection for each of the ADC inputs. 図 6-13 shows the out-of-range detection block. When the measurement is out of range, the corresponding alarm bit is set to flag the out-of-range condition.

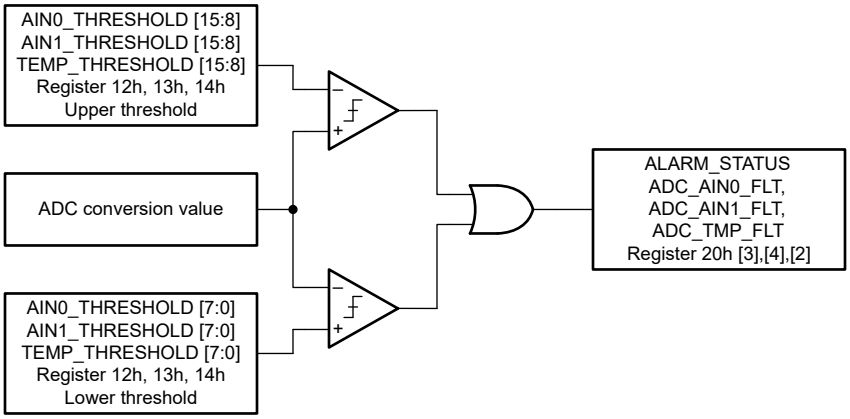

図 6-13. ADC Out-of-Range Alarm

An alarm event is only registered when the monitored signal is out of range for *N* number of consecutive conversions, where *N* is configured in the ADC_CFG.FLT_CNT false alarm register settings. If the monitored signal returns to the normal range before *N* consecutive conversions, an alarm event is not issued.

If an ADC input signal is out of range and the alarm is enabled, then the corresponding alarm bit is set to 1. However, the alarm condition is cleared only when the conversion result returns to a value less than the high-limit register setting and greater than the low-limit register setting by the number of codes specified by the hysteresis setting (see 図 6-14). The hysteresis is a programmable value between 0 LSB to 127 LSB in the ADC_CFG.HYST register.

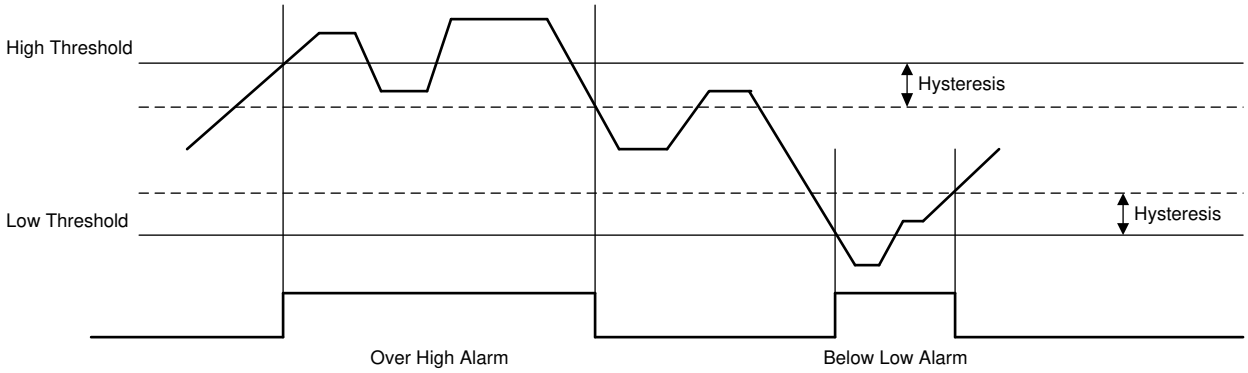

図 6-14. ADC Alarm Hysteresis

6.3.3.7 Fault Detection

There are two fields within the ADC_CFG register: FLT_CNT and HYST. These fields are applied to the assertion and deassertion of alarm conditions for all the ADC channels.

ADC_CFG.FLT_CNT determines the maximum number of accepted consecutive failures before an alarm condition is reported. For example, if ADC_CFG.FLT_CNT is set for two counts, then three consecutive conversions must be outside of the thresholds to trigger an alarm. Each failure counts towards the FLT_CNT limit even if the failures alternate between high threshold and low threshold.

ADC_CFG.HYST sets the hysteresis used by the alarm-detection circuit. After an alarm is triggered, the hysteresis is applied before the alarm condition is released. In the case of the high threshold, the hysteresis is subtracted from the threshold value. In the case of the low threshold limit, the hysteresis is added to the threshold value.

Channels AIN0, AIN1, and TEMP have high and low thresholds associated with them. If a conversion value falls outside of these limits (that is, if TEMP < low threshold or TEMP > high threshold), an alarm condition for that channel is set. The alarms are disabled by setting 0x000 for the low threshold and 0xFFF for the high threshold, respectively. These alarms are disabled by default. Because the configuration fields for the thresholds are only eight bits wide, the four LSBs are hardcoded for each threshold. The high thresholds four LSBs are hardcoded to 0xF, and the low thresholds four LSBs are hardcoded to 0x0.

All the self diagnostic (SD) channels have fixed thresholds, except SD4, which measures the VOUT of the main DAC. The threshold for SD4 tracks the VOUT with respect to the DAC code. 表 6-5 shows the calculations used to determine the high and low ADC thresholds for each SD channel. The limits in the two right-most columns are determined by the threshold columns to the left and given some margin. The four LSBs are assigned as described previously.

表 6-5. Self Diagnostic (SD) Alarm ADC Thresholds

SD	ADC INPUT	ACCEPTED LOW VALUE	ACCEPTED HIGH VALUE	LOW THRESHOLD	HIGH THRESHOLD	ADC LOW (HEX)	ADC HIGH (HEX)
SD0	VREF/2	VREF/2 – 9% – 25 mV	VREF/2 + 9% + 25 mV	0.54375 V	0.70625 V	0x6D0	0x92F
SD1	PVDD/6	1.65/6 – 25 mV	6/6 + 25 mV	0.25 V	1.025 V	0x310	0xD3F
SD2	VDD/2	1.6/2 – 25 mV	2/2 + 25 mV	0.775 V	1.025 V	0x9C0	0xD3F
SD3	0.6 V	0.6 V – 9% – 25 mV	0.6 V + 9% + 25 mV	0.521 V	0.679 V	0x690	0x8CF
SD4	VOUT/2	VOUT/2 – 6 mV	VOUT/2 + 6 mV	VOUT – 12 mV	VOUT + 12 mV	Expected – 0x040	Expected + 0x040

The alarm threshold for the SD4 input depends on the expected ADC measurement based on the DAC code. 式 9 shows the expected ADC code for SD4.

$$\text{ADC Expected Code} = \text{DAC_CODE}[\text{MSB}:\text{MSB}-11] \quad (9)$$

Copyright © 2024 Texas Instruments Incorporated

6.3.4 IRQ

The devices include an interrupt request (IRQ) to communicate the occurrence of a variety of events to the host controller. The IRQ block initiates interrupts that are reported internally in a status register, externally on the IRQ pin if the function is enabled, or on the $\overline{\text{ALARM}}$ pin if the condition is from the ALARM_STATUS register. 図 6-15 shows the IRQ block diagram.

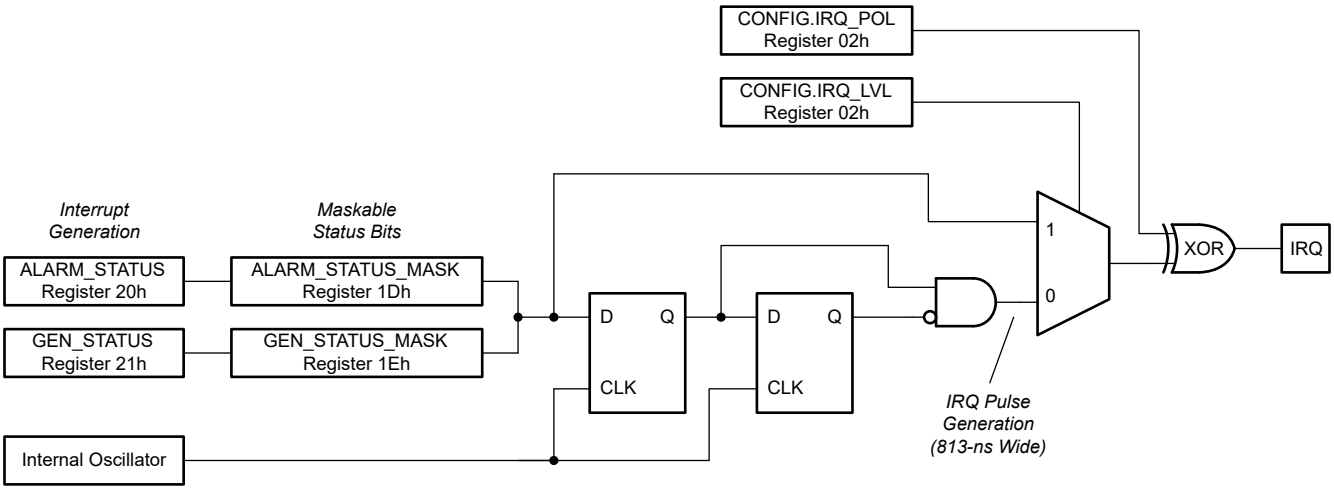

図 6-15. IRQ Block Diagram

There are two registers that can generate interrupts: GEN_STATUS and ALARM_STATUS. Each of these registers has a corresponding STATUS_MASK register. The mask register controls which of the events trigger an interrupt. Writing a 1 in the mask register masks, or disables, the event from triggering an interrupt. Writing a 0 in the mask register allows the event to trigger an IRQ. All bits are masked by default. Some status bits are sticky. Reading the corresponding register clears a sticky bit, unless the condition still exists.

The IRQ is configured through CONFIG.IRQ_LVL to be edge- or level-sensitive. Set this bit to logic 1 to enable level-sensitive functionality (default). In edge-sensitive mode, the IRQ signal is a synchronous pulse, one internal clock period wide (813 ns). In level-sensitive mode, the IRQ is set and remains set as long as the condition exists. After the IRQ condition is removed, the condition is cleared by reading the corresponding status register. Trying to clear the bit while the condition still exists does not allow the bit to be cleared if the bit is sticky.

CONFIG.IRQ_POL determines the active level of the IRQ. A logic 1 configures IRQ to be active high.

When using edge-sensitive IRQ signals, there is a clock cycle delay for synchronization and edge detection. With a 307.2-kHz clock, this delay is up to 3.26 µs. For level-sensitive mode, the delay is approximately 10 ns to 20 ns.

Most status bits have two versions within the design. The first version is an edge event that is created when the status is asserted. This signal is used to generate edge-sensitive IRQs. This edge detection prevents multiple status events from blocking one another. The second version is the sticky version of the status bit. This signal is set upon assertion of the status bit and cleared when the corresponding status register is read, as long as the status condition does not still persist. Signals GEN_IRQ and ALARM_IRQ are driven by the logical OR of the of the status bits within the corresponding register.

If a status bit is unmasked and the sticky version of that bit has been asserted, and the IRQ is level-sensitive, then an interrupt is triggered as soon as the bit is unmasked. If the IRQ is edge-sensitive then a status event must occur after the bit has been unmasked to assert an interrupt.

6.3.5 Internal Reference

The AFEx8201 family of devices includes a 1.25-V precision band-gap reference. The internal reference is externally available at the VREFIO pin and sources up to 2.5 mA. For noise filtering, use a 100-nF capacitor between the reference output and GND.

The internal reference circuit is enabled or disabled by using the REF_EN pin. A logic high on this pin enables the internal reference, and the VREFIO pin outputs 1.25 V. A logic low on this pin disables the internal reference, and the device expects to have 1.25 V from external VREF at the VREFIO pin.

An invalid reference voltage asserts an alarm condition. The DAC response depends on the VREF_FLT setting in the ALARM_ACT register (10h).

6.3.6 Integrated Precision Oscillator

The internal time base of the device is provided by an internal oscillator that is trimmed to less than 0.5% tolerance at room temperature. The precision oscillator is the timing source for ADC conversions. At power up, the internal oscillator and ADC take roughly 300 µs to reach < 1% error stability. After the clock stabilizes, the ADC data output is accurate to the electrical specifications provided in セクション 5.

6.3.7 Precision Oscillator Diagnostics

The AFEx8201 features two methods to continuously detect the functional status of the internal precision oscillator.

The first method requires a connection from the AFEx8201 to the system controller. To use the first method, program the AFEx8201 to output a subdivided internal oscillator clock signal on the CLK_OUT pin. Write to the CONFIG.CLKO register field (see 表 7-5) to enable the output with the chosen divider or to disable the output. The output digital signal is compliant to the セクション 5.5. The CLK_OUT pin is also a shared GPIO pin. For details on connecting CLK_OUT and CLK_OUT interoperability as a GPIO pin , see セクション 6.5.1.

The second method does not require a connection from the AFEx8201 and is a polled-communication-based method to determine the functionality of the internal oscillator using SPI communication. See セクション 6.5.3.1 and セクション 6.5.5 for SPI communication details and SDO status bits details, respectively. The OSC_DIV_2 bit reports the logical value of a subdivided internal oscillator signal (divided by 2) sampled at the $\overline{CS}$ falling edge. Use an appropriate SCLK frequency and interval between SPI frames to capture bit changes from frame to frame as a method of verifying the continued proper operation of the clock. Similar status reports of the logical value of a subdivided internal oscillator signal (divided by 1024) are available in UBM as the OSC_DIV_1024 bit. For details on UBM frames and timing, see セクション 6.5.4.1.

6.3.8 One-Time Programmable (OTP) Memory

One-time programmable (OTP) memory in the device is used to store the device trim settings and is not accessible to users. The OTP memory data are loaded to the memory (OTP shadow load) at power up. The OTP memory CRC is performed to verify the correct data are loaded. The TRIGGER.SHADOWLOAD bit is available to initiate a reload of the OTP memory data if a CRC error is detected. The SPECIAL_CFG.OTP_LOAD_SW_RST bit controls whether the OTP memory data are reloaded with a software reset.

6.3.9 GPIO

AFEx8201 feature multiple GPIO pins, each independently configurable in either input only or output only or input-ouput mode through GPIO_CFG and GPIO registers. Select either push-pull or pseudo open drain sub modes supported when the GPIO is in output mode. No dedicated GPIO pins are present since the same pins are also configurable for communication interfaces. Based on the selection of the interface protocol and how many pins are used for communication purposes, the AFEx8201 have up to four available GPIOs. Refer to セクション 6.5.1 for detailed diagrams of available GPIOs in each communication mode. If a GPIO pin is unused or undriven, the pin must be tied resistively to either IOVDD or GND according to the connection diagrams in セクション 6.5.1. Unconnected floating input pins lead to unknown states for the communication interfaces and varying

Copyright © 2024 Texas Instruments Incorporated

supply currents for the AFEx8201. When functioning as an output, each GPIO pin is capable of sourcing and sinking current and when functioning as an input the register address 0x1C reflects the digital state of the GPIO pins (for details of source and sink capabilities and input thresholds, see セクション 5.5). The minimum pulse width for transition detection is t_{PULSE_GPIO}. When a state transition occurs on a GPIO input, the new state must be held for a minimum of t_{PULSE_GPIO} for detection by the AFEx8201.

6.3.10 Timer

The AFEx8201 have an integrated timer for generating accurate time delays, pulse width modulation or oscillation. The devices have the ability to have timing parameters from the microseconds range to hours. The timer is brought out on the CLK_OUT pin by setting CONFIG.CLKO = Fh. The timer is controlled with three registers; TIMER_CFG_0, TIMER_CFG_1, and TIMER_CFG_2.

In the first of the three registers, TIMER_CFG_0.ENABLE turns the timer function on and off. If the timer is off, then the output defaults to 0. TIMER_CFG_0.INVERT inverts the output of the timer. If the INVERT bit is set, the output defaults to 1. TIMER_CFG_0.CLK_SEL selects the clock frequency according to 表 6-6. If 2'b00 is selected, and no clock is applied, then the timer pauses if the timer has previously been enabled and counting.

表 6-6. Timer Select Range

CLK_SEL	Clock Frequency	Resolution	Range
00	No clock	-	-
01	1.2288 MHz	814 ns	53.3 ms
10	1.200 kHz	833 µs	54.6 s
11	1.171 Hz	853 ms	55,923 s

The second timer register, TIMER_CFG_1.PERIOD sets the period of the timer. The period of the timer is PERIOD + 1 cycles of the clock period.

The last timer register, TIMER_CFG_2.SET_TIME determines when the timer output goes to 1 (INVERT = 0). This effectively defines the duty cycle of the timer. The duty cycle can be calculated as (PERIOD – SET_TIME) × clock period.

6.3.11 Unique Chip Identifier (ID)

AFEx8201 include two read only registers: CHIP_ID_MSB (1Ah) and CHIP_ID_LSB (19h) where unique chip ID is stored. The 16-bit CHIP_ID_MSB register stores the encoded lot identification number while the CHIP_ID_LSB register stores the unique part number within each lot.

6.3.12 Scratch Pad Register

AFEx8201 feature a 16-bit Scratch Pad register to enable interface debug and verification without affecting the part functionality. This register is located at the address 18h. The readback value of the Scratch Pad register is the inverted code of the value stored in the register (for example, writing 0xAAAA results in 0x5555 while reading back).

6.4 Device Functional Modes

6.4.1 Register Built-In Self-Test (RBIST)

The AFEx8201 feature a register built-in self-test (RBIST) that runs on all the registers listed in 表 6-7 through a CRC calculation in the order the registers are listed in 表 6-7. If a register is reserved, the reset value is used in the calculation of the RBIST. If the final CRC value is zero, then no error is present in the configuration of the registers. If a non-zero value is present at the end of the calculation, then there is a configuration error. The polynomial used has a Hamming distance (HD) of 4 for data packets up to 2048 bits. With HD = 4, the CRC detects any combination of 4-bit errors within the stored data. Independently calculate the expected CRC polynomial and store the output in the RBIST_CRC register at 3Fh.

The final value of the CRC is read in the CRC_RD register at address 3Eh. This value is updated while either an RBIST or shadow load is running. Both the RBIST and OTP memory use the same CRC calculation engine and polynomial. The value in the CRC_RD register remains constant until another RBIST or SHADOWLOAD in TRIGGER register (0Ah) is triggered.

Set TRIGGER.RBIST to 1 to initiate an RBIST. The TRIGGER.RBIST bit stays high as long as the RBIST is running and clears when the self-test is complete. While the RBIST is running, the registers cannot be written to or read. Send NOP commands and monitor the RBIST SDO status bit to determine if the RBIST has completed.

In UBM, the RBIST does not interfere with register communication. UBM communication is slow enough that the RBIST completes before any following read or write command.

Set the GEN_STATUS.RBIST_MODE bit to 1 to enable the RBIST. This bit is sticky until the GEN_STATUS register is read.

The 16-bit CRC used to generate the RBIST is compliant to the openSAFETY (0x755B) standard with the following polynomial:

$x^{16} + x^{14} + x^{13} + x^{12} + x^{10} + x^{8} + x^{6} + x^{4} + x^{3} + x^{1} + 1$.

The list of registers covered by the RBIST is listed in 表 6-7. Not all registers feature the RBIST.

表 6-7. List of Registers Covered by RBIST

ADDR (HEX)	REGISTER	RESET (HEX)
01h	DAC_DATA	0000h
02h	CONFIG	0036h
03h	DAC_CFG	0B00h
04h	DAC_GAIN	8000h
05h	DAC_OFFSET	0000h
06h	DAC_CLR_CODE	0000h
08h	ADC_CFG	8810h
09h	ADC_INDEX_CFG	0080h
0Bh	SPECIAL_CFG	0000h
0Dh	RESERVED	0100h
0Eh	RESERVED	0040h
0Fh	RESERVED	00F0h
10h	ALARM_ACT	8020h
11h	WDT	0018h
12h	AIN0_THRESHOLD	FF00h
13h	AIN1_THRESHOLD	FF00h
14h	TEMP_THRESHOLD	FF00h
1Bh	GPIO_CFG	00FFh
1Dh	ALARM_STATUS_MASK	EFDFh
1Eh	GEN_STATUS_MASK	FFFFh
1Fh	RESERVED	FFFFh
3Fh	RBIST_CRC	0000h

6.4.2 DAC Power-Down Mode

Power-down mode facilitates rapid turn-off of the voltage at the DAC output. The DAC can be set to enter and exit power-down mode through hardware, software, or automatically in response to an alarm event. The DAC output is specified for glitch-free performance when going into and out of power-down mode.

Copyright © 2024 Texas Instruments Incorporated

Power-down mode is also be enabled by setting DAC_CFG.PD to 1. In power-down mode, the DAC output amplifier powers down and the DAC output pin is put into the Hi-Z configuration. The DAC output remains in power-down mode until the DAC output is re-enabled.

Alarm control of the power-down mode is enabled by setting the alarm events as DAC power-down sources. The alarm events that trigger the DAC output power-down state must be specified in the ALARM_ACT register. After the alarm bit is cleared, the DAC returns to normal operation, as long as no other power-down controlling alarm event has been triggered.

The DAC register does not change when the DAC enters power-down mode, which enables the device to return to the original operating point after return from the power-down mode. Additionally, the DAC register can be updated while the DAC is in power-down mode, thus allowing the DAC to output a new value upon return to normal operation.

6.4.3 Reset

There are three reset mechanisms in the device: a power-on reset (POR), a $\overline{\text{RESET}}$ pin, and the SW_RST command that can be sent through the either the SPI or by UBM.

When power is first applied to the device, a POR circuit holds the device in reset until all supplies reach the specified operating voltages. The power-on reset returns the device to a known operating state in case a brownout event occurs (when the supplies have dipped below the minimum operating voltages). The POR starts all digital circuits in reset as the supply settles, and releases them to make sure that the device starts in the default condition and loads the OTP memory. After the OTP memory has been loaded, the $\overline{\text{ALARM}}$ pin is released. At this time, communication with the device is safe. This t_{POR} time is less than 100 µs.

The devices also have a $\overline{\text{RESET}}$ pin that is used as a hardware reset to the device. Send the $\overline{\text{RESET}}$ pin low for a minimum of 100 ns (t_{RESET}) to reset the device. A delay time of 10 µs ($t_{RESETWAIT}$) is required before sending the first serial interface command as the device latches and releases the reset. The release of the internal reset state is synchronized to the internal clock. The $\overline{\text{RESET}}$ pin resets the SPI and the UART interfaces, the watchdog timer, the internal oscillator, and the device registers. $\overline{\text{RESET}}$ does not reload the OTP memory.

The command to RESET.SW_RST = 0xAD resets the device as a software reset. The command is decoded at the rising edge of $\overline{\text{CS}}$ with an SPI command or during the stop bit of the last character of a UBM frame. Set UBM.REG_MODE again to put the device back into UBM when resetting the device in UBM. After sending the RESET command, no delay time is required before sending the first serial interface command as the device latches and releases the reset. The reset is synchronized to the falling edge of the internal clock and is released well before the next rising edge. The $\overline{\text{ALARM}}$ pin pulses low for the width of the internal reset. This pulse duration is less than 20 ns. This command resets the SPI and the UART interface, and the watchdog timer, but does not reset the internal oscillator. The software reset also reloads internal factory trim registers if properly configured in the SPECIAL_CFG register. The SPECIAL_CFG register is only reset with a POR.

The POR and hardware reset place the internal oscillator into a reset condition, which holds the clock low. When these two signals are released, there is a delay of a few microseconds before the first rising edge of the clock. The hardware reset, $\overline{\text{RESET}}$, pulse width must be at least 100 ns to allow the oscillator to properly reset. The SW_RST command is a short pulse. This pulse is not long enough to adequately reset the oscillator. The SW_RST is asserted with a falling edge of the clock. As a result of the long oscillator period, the design architecture provides that all devices are out of reset by the next rising edge.

図 6-16 shows the reset tree.

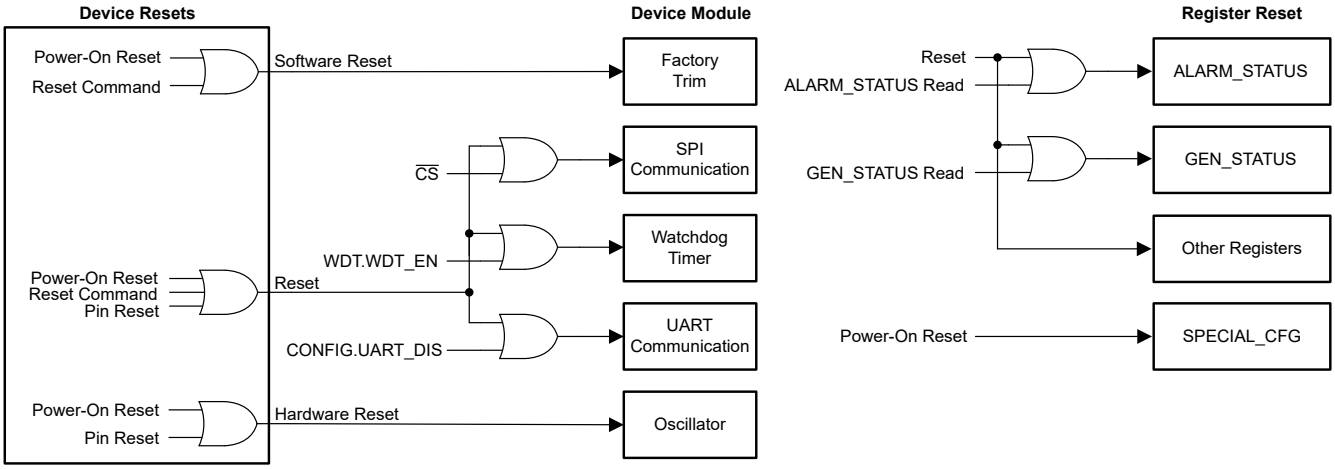

図 6-16. Reset Conditions

Copyright © 2024 Texas Instruments Incorporated

6.5 Programming

The AFEx8201 communicate with the system controller through a serial interface that supports either a UART-compatible two-wire bus or an SPI-compatible bus. Based on the hardware configuration, either interface can be enabled. 図 6-17 and 図 6-18 show the configurations to enable SPI mode and UART break mode (UBM), respectively. The SPI supports an 8-bit frame-by-frame CRC that is enabled by default, but can be disabled by the user. UBM does not support CRC, but does support the UART protocol parity bit.

6.5.1 Communication Setup

After any reset or power up, the AFEx8201 wake up able to use the SPI or UART break mode (UBM). The devices include a robust mechanism that configures the interface between either an SPI-compatible or UART-compatible protocol based system, thus preventing protocol change during normal operation. The selection is based on initial conditions from the respective hardware configurations (see 図 6-17 and 図 6-18) and any subsequent user configuration.

6.5.1.1 SPI Mode

By default, the AFEx8201 can be fully accessed with the SPI (except UBM.REG_MODE). To set up the device in SPI mode:

1. Set CONFIG.UART_DIS = 1 (disables the UART communication).
2. Optionally, set CONFIG.DSDO, CONFIG.FSDO, CONFIG.CLR_PIN_EN, and CONFIG.IRQ_PIN_EN. For details, see 表 7-5.

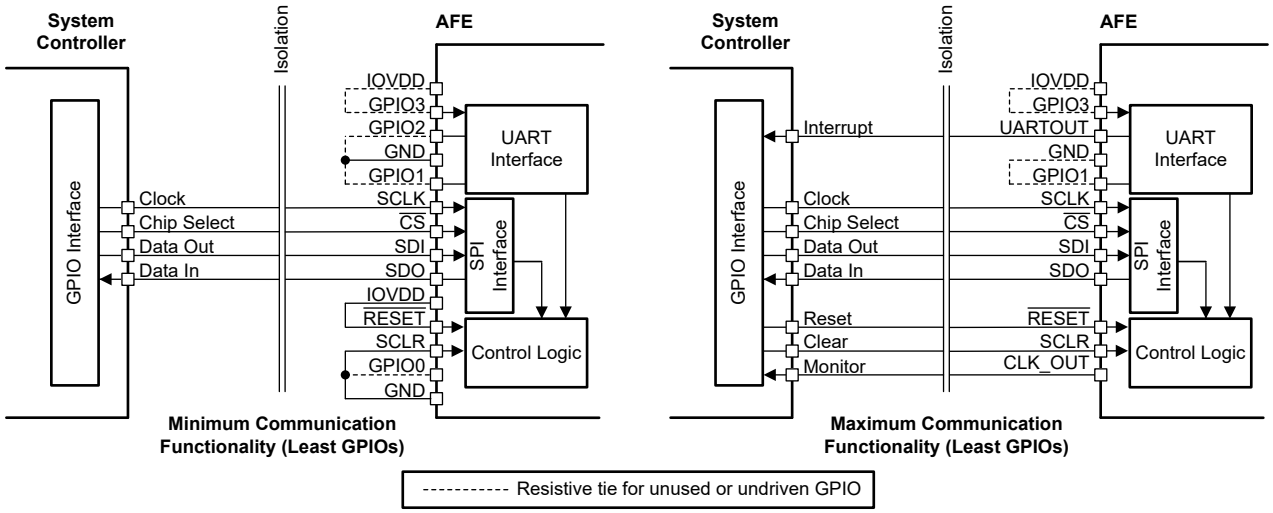

図 6-17. SPI Mode Connections

図 6-17 shows the SPI mode logical connections (through the isolation barrier, if used) for both minimum communication functionality (all optional communication pins disconnected, most GPIO pins available shown) and maximum communication functionality (all communication pins connected, least GPIO pins available shown). If CONFIG.IRQ_PIN_EN = 1 is set, then the UARTOUT pin functions as the IRQ output. In SPI mode, set CONFIG.SDO_DSDO = 0 to enable the readback function. This function is disabled by default to save power. If the readback function not enabled, SDO remains in Hi-Z mode even during the subsequent frame after a read request. Enable each GPIO pin for use through proper register configuration. If a pin remains unused, tied the pin to either IOVDD using a pullup resistor or to GND using a pull-down resistor as indicated to avoid floating I/Os.

6.5.1.2 UART Mode

At power up, the UART interface is set to 9600 baud with UBM enabled. Any reset clears the UBM register, and the register must be set again to use UBM. To set up the device in UBM:

1. Using UBM, set UBM.REG_MODE = 1 at 9600 baud. This setting blocks the SPI from accessing the device and enables the UART interface access to the entire register map.
2. Optionally, set CONFIG.CLR_PIN_EN and CONFIG.IRQ_PIN_EN (See 表 7-5 for details).

図 6-18 shows the UBM logical connections (through the isolation barrier, if used) for both minimum communication functionality (all optional communication pins disconnected, most GPIO pins available shown) and maximum communication functionality (all communication pins connected, least GPIO pins available shown). If CONFIG.IRQ_PIN_EN = 1 is set, then the SDO pin functions as the IRQ output. If CONFIG.CLR_PIN_EN = 1 is set, then the SDI pin controls the clear pin function. Enable each GPIO pin for use through proper register configuration. If a GPIO pin remains unused, tie the pin to either IOVDD using a pullup resistor or to GND using a pulldown resistor to avoid floating I/Os.

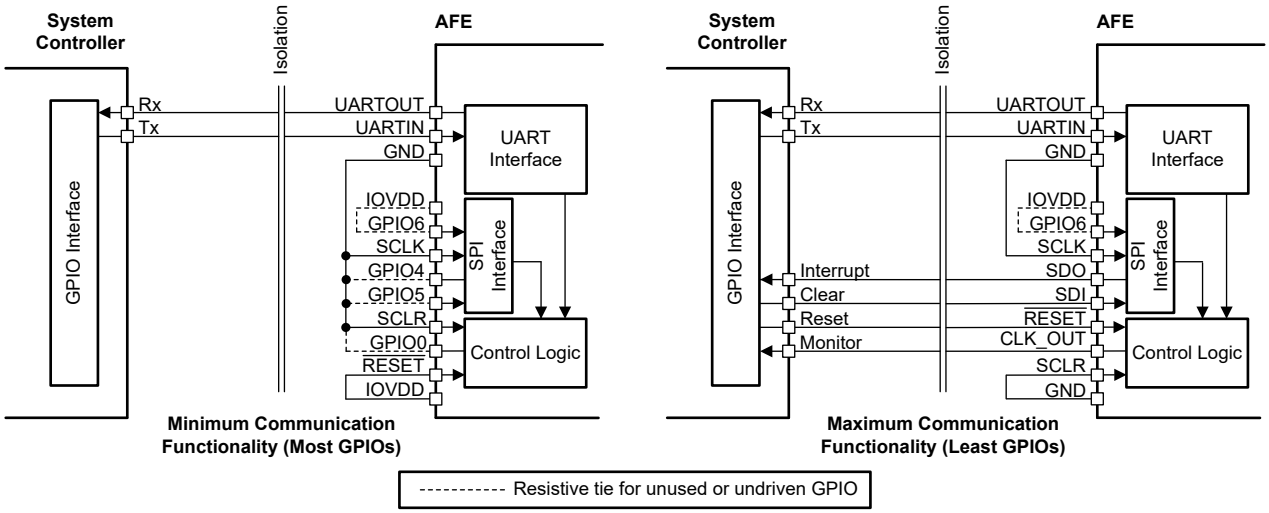

図 6-18. UBM (UART Interface) Connections

Copyright © 2024 Texas Instruments Incorporated

6.5.2 GPIO Programming

Seven physical pins are interoperable as GPIOs in the AFEx8201 when not used for communication. The state of these pins is set after the communication interface mode is determined (see セクション 6.5.1 for power-up conditions and connection-diagram options for each communication mode supported by the AFEx8201). Configure any unused communication pins as GPIO, and resistively tie the pins to IOVDD or GND, respectively, as described in セクション 6.5.1.

表 6-8 shows the pins and pin functions in UBM or SPI mode and lists the register configuration conditions to enable GPIO functionality for each pin. In addition to these register configurations, to use an available pin as GPIO, set the corresponding GPIO_CFG.EN bit.

For a GPIO pin to be configured as an input, the following conditions must be met:

1. GPIO_CFG.ODE for the pin must = 1
2. GPIO.DATA for the pin must = 1

After initialization, the pin state is Hi-Z. Reading the GPIO.DATA register reads the pin value.

If the previous conditions are not met, the pin is an output. In this case, the output drive type is determined by the GPIO_CFG.ODE bits to be push-pull or pseudo open drain. The GPIO output is driven by the GPIO.DATA bits. All reads of GPIO.DATA reports the values of the pins, regardless if the pins are configured as GPIO or not. Data written to the GPIO.DATA bits cannot be read directly. If a pin is available for use as GPIO, then the corresponding GPIO_CFG.EN bit must be set to enable GPIO functionality.

表 6-8. Pin Configuration in Each Interface Mode

PIN	UBM		SPI		REGISTER CONFIGURATION TO ENABLE GPIO [(1)]
	FUNCTION	DIRECTION	FUNCTION	DIRECTION	
GPIO6/$\overline{CS}$	GPIO	Input/Output	$\overline{CS}$	Input	(UBM.REG_MODE = 1)
GPIO5/SDI	CLR/GPIO	Input/Output	SDI	Input	(UBM.REG_MODE = 1) AND (CONFIG.CLR_PIN_EN = 0)
GPIO4/SDO	IRQ/GPIO	Input/Output	SDO	Output	(UBM.REG_MODE = 1) AND (CONFIG.IRQ_PIN_EN = 0)
GPIO3/UARTIN	UARTIN	Input	GPIO	Input/Output	(CONFIG.UART_DIS = 1)
GPIO2/UARTOUT	UARTOUT	Output	IRQ/GPIO	Input/Output	(CONFIG.UART_DIS = 1) AND (CONFIG.IRQ_PIN_EN = 0)
GPIO1	GND	N/A	GPIO	Input/Output	(CONFIG.UART_DIS = 1)
GPIO0/CLK_OUT	CLKO/GPIO	Input/Output	GPIO/CLKO	Input/Output	(CONFIG.CLKO = 0) AND ((UBM.REGMODE = 1) OR (CONFIG.UART_DIS = 1))

(1) Required by pin in addition to the corresponding GPIO_CFG.EN bit.

6.5.3 Serial Peripheral Interface (SPI)

The AFEx8201 are controlled over a versatile four-wire serial interface (SDIN, SDO, SCLK, and $\overline{CS}$). The interface operates at clock rates of up to 12.5 MHz and is compatible with SPI, QSPI, Microwire, and digital signal processing (DSP) standards. The SPI communication command consists of a read or write address, a data word, and an optional CRC byte.

The SPI can access all register addresses except for the UBM register. Read-only and read-write capability is defined by register (see 表 7-1). The SPI supports both SPI Mode 1 (CPOL = 0, CPHA = 1) and SPI Mode 2 (CPOL = 1, CPHA = 0). The default SCLK value is low for SPI Mode 1 and high for SPI Mode 2. See セクション 5.7 for timing diagrams in each mode. The serial clock, SCLK, can be continuous or gated.

6.5.3.1 SPI Frame Definition

Subject to the timing requirements listed in the *Timing Requirements* , the first SCLK falling edge immediately following the falling edge of $\overline{CS}$ captures the first frame bit. Subject to the same requirements, the last SCLK falling edge before the rising edge of $\overline{CS}$ captures the last bit of the frame. 図 6-19 shows that the SPI shift register frame is 32-bits wide, and consists of an R/W bit, followed by a 7-bit address, and a 16-bit data word. The 8-bit CRC is optional (enabled by default) and is disabled by setting CONFIG.CRC_EN = 0 (see also セクション 6.5.3.3). 図 6-20 shows that when the CRC is disabled, the frame is 24-bits wide.

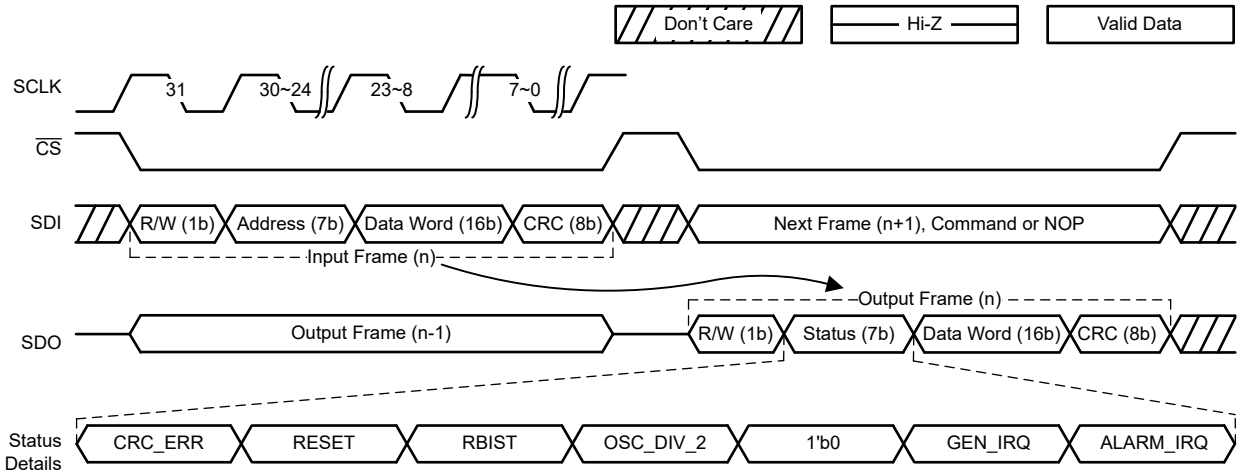

図 6-19. SPI Frame Details (Default, CRC Enabled)

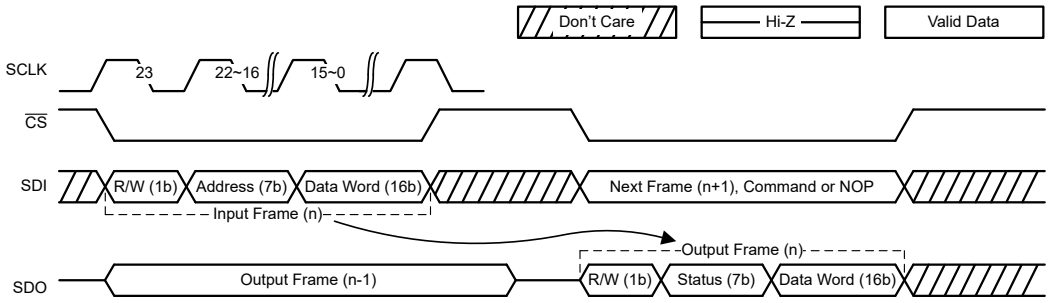

図 6-20. SPI Frame Details (CRC Disabled)

For a valid frame, a full frame length of data (24 bits if CRC is disabled or 32 bits if CRC is enabled) must be transmitted before $\overline{CS}$ is brought high. If $\overline{CS}$ is brought high before the last falling SCLK edge of a full frame, then the data word is not transferred into the internal registers. If more than a full frame length of falling SCLK edges are applied before $\overline{CS}$ is brought high, then the last full frame length number of bits are used. In other words, if the number of falling SCLK edges while $\overline{CS}$ = 0 is 34, then the last 32 SCLK cycles (or 24 if CRC is disabled) are treated as the valid frame. The device internal registers are updated from the SPI shift register on

Copyright © 2024 Texas Instruments Incorporated

the rising edge of $\overline{CS}$. To start another serial transfer, bring $\overline{CS}$ low again. When $\overline{CS}$ is high, the SCLK and SDI signals are blocked and the SDO pin is high impedance.

6.5.3.2 SPI Read and Write

The SDI input bit is latched on the SCLK falling edge. The SDI pin receives right-justified data. At the rising edge of $\overline{CS}$, the right-most (last) bits are evaluated as a frame. Extra clock cycles (exceeding frame length) during the frame begin to output on SDO the SDI data delayed by one frame length.

A read operation is started when R/W bit is 1. The data word input for SDI is ignored in the read command frame. Send the subsequent read or write command frame into SDI to clock out the data of the addressed register on SDO. If no other read or write commands are needed, then issue a NOP command to retrieve the requested data. The read register value is output most significant bit first on SDO on successive edges (rising or falling based on CONFIG.FSDO setting) of SCLK.

A write operation starts when R/W bit is 0. The SDO output to a write command, delivered in the next frame, contains status bits, data described in 表 6-9, and if the CRC is enabled, an 8-bit CRC for the output frame.

表 6-9. Command Functions

COMMAND BIT	SDI INPUT DATA WORD	SDO RESPONSE DATA WORD[(1)]
Write (R/W = 0)	Data to be written (16b)	0x0000
Read (R/W = 1)	Ignored[(2)]	Register output data (16b)

(1) Response data portion in next frame output.
(2) The input bits are included in the calculation for CRC, if enabled (see セクション 6.5.3.3).

Valid SDO output is driven only when $\overline{CS}$ = 0 and CONFIG.DSDO = 0; otherwise, the SDO pin remains Hi-Z to save power. The SDO data bits are left-justified within the frame, meaning the most significant bit is produced on the line (subject to timing details) when $\overline{CS}$ is asserted low (bit is driven by falling edge of $\overline{CS}$). The subsequent bits in the frame are driven by the rising SCLK edge when CONFIG.FSDO = 0 (default). To drive the SDO data on the falling edge of SCLK, set CONFIG.FSDO = 1. This setting effectively gives the SDO data an additional ½ clock period for setup time, but at the expense of hold time.

The frame output on SDO contains the command bit of the input that generated the frame (previous input frame), followed by seven status bits (see 図 6-19). When an input frame CRC error is detected, the status bit CRC_ERR = 1. If there is no input frame CRC error, then CRC_ERR = 0. See 表 6-10 for details.

6.5.3.3 Frame Error Checking

If the AFEx8201 are used in a noisy environment, use the CRC to check the integrity of the SPI data communication between the device and the system controller. This feature is enabled by default and is controlled by the CONFIG.CRC_EN bit. If the CRC is not required in the system, disable frame error checking through the CRC_EN bit, and switch from the default 32-bit frame to the 24-bit frame.

Frame error checking is based on the CRC-8-ATM (HEC) polynomial: $x^8 + x^2 + x + 1$ (*9'b100000111*).

For the output register readback, the AFEx8201 supply the calculated 8-bit CRC for the 24 bits of data provided, as part of the 32-bit frame.

The AFEx8201 decodes 24-bits of the input frame data and the 8-bit CRC to compute the CRC remainder. If no error exists in the frame, the CRC remainder is zero. When the remainder is nonzero (that is, the input frame has single-bit or multiple-bit errors) the ALARM_STATUS.CRC_ERR_CNT bits are incremented. A bad CRC value prevents execution of commands to the device.

When the CRC error counter reaches the limit programmed in CONFIG.CRC_ERR_CNT, the CRC_FLT status bit is set in the ALARM_STATUS register. The fault is reported (as long as the corresponding mask is not set) as an ALARM_IRQ on SDO during the next frame. The $\overline{ALARM}$ pin asserts low if enabled by the alarm action configuration (see セクション 6.3.3.2).

The CRC_ERR status bit (see 図 6-19) in the SDO frame is not sticky and is only reported for the previous frame. The ALARM_STATUS.CRC_FLT bit is sticky and is only cleared after a successful read of the ALARM_STATUS register. Read the GEN_STATUS or ALARM_STATUS registers to clear any sticky bits that are set.

The sticky status bits are cleared at the start of the readback frame and are latched again at the end of the readback frame. Therefore, if the fault condition previously reported in the status register is no longer present at the end of the readback frame, and the data are received by the microcontroller with the CRC error, the fault information is lost. If a robust monitoring of the status bits is required in a noisy environment, use the IRQ pin in combination with the status mask bits to find out the status of each fault before clearing the status bits. Set the CONFIG.IRQ_LVL bit to monitor the signal level on the IRQ pin, and unmask each status bit one at a time to retrieve the information from the status registers.

6.5.3.4 Synchronization

The AFEx8201 register map runs on the internal clock domain. Both the SPI and UBM packets are synchronized to this domain. This synchronization adds a latency of 0.4 µs to 1.22 µs (1.5 internal clocks), with respect to the rising edge of $\overline{CS}$ or the STOP bit of the last byte of the UBM packet.

The effect of clock synchronization on UBM communication is not evident because of the lower speed and asynchronous nature of UBM communication.

In SPI mode, if changing register bits CONFIG.DSDO, CONFIG.FSDO, or CONFIG.CRC_EN, keep $\overline{CS}$ high for at least two clock cycles before issuing the next frame. Frame data corruption can occur if the two extra cycles are not used. The following are examples of frame corruption:

- Setting CONFIG.DSDO = 0: SDO begins to drive in the middle of the next frame.
- Changing CONFIG.FSDO: The launching edge of SDO changes in the middle of the next frame.
- Setting CONFIG.CRC_EN = 1: The next frame has a CRC error because the CRC is enabled in the middle of the frame.

Send a NOP command (SDI = 0x00_0000) after setting the DSDO, FSDO, and CRC_EN bits to prevent the corrupted frames from impacting communication. Sending a NOP after CONFIG.CRC_EN is set still generates a CRC error, and is reported in the STATUS portion of SDO. To avoid false errors, wait approximately 2 µs after setting CONFIG.CRC_EN before sending the next frame.

Copyright © 2024 Texas Instruments Incorporated

6.5.4 UART Interface

In UART mode, the device expects 1 start bit, 8 data bits, 1 odd parity bit, and 1 stop bit, or an 8O1 UART character format.

6.5.4.1 UART Break Mode (UBM)

In UART break mode (UBM), the microcontroller issues a UART break to start communication. The device interprets the UART break as the start to receive commands from the UART. A communication UART character consists of one start bit, eight data bits, one odd parity bit, and at least one stop bit. A UART break character is all 11 bits (including start, data, parity and stop bit) held low by the microcontroller on the UARTIN pin and by the AFEx8201 on the UARTOUT pin. When a valid break character is detected on UARTIN by the AFEx8201, no parity (even though parity is odd) or stop bit errors are flagged for this character. The parity and stop bit differences between valid UBM break and communication characters must be managed by the system microcontroller when receiving these characters from the UARTOUT pin of the AFEx8201. See 図 5-2 for UBM break character, communication timing details, and bit order.

AFEx8201 UART break mode communication is supported at 9600 baud.

Set UBM.REG_MODE = 1 to enable register map access through the UART. By default, this bit is set to 0. The entire register map can only be accessed with SPI, except for the UBM register. The UBM register can only be accessed with UBM. After UBM.REG_MODE is set to 1, the SPI does not have access to the register map, and the full register map is accessible by UBM.

A UBM data output packet is initiated by AFEx8201 on UARTOUT in two cases. See 図 6-23 for packet structure details. If the R/IRQn status bit is 0 an IRQ event initiated the break command. If the R/IRQn status bit is 1, the break command is a response to the prior read request.

To enable IRQ events, set CONFIG.UBM_IRQ_EN = 1. When IRQ is enabled, the AFEx8201 triggers a break command followed by data on UARTOUT (see 図 6-23).

The contents of the data are listed in order of priority below.

1. If ALARM_IRQ bit is set, then the contents of the ALARM_STATUS register are output.
2. If GEN_IRQ is set, then the contents of the GEN_STATUS register are output.
3. If none of the previous bits are set, then an IRQ is not generated.

A break byte is followed by three bytes. These three bytes have information identical to the SPI frame without the CRC (see 図 6-20). The CRC cannot be enabled for UBM. All communication characters on the UART bus are transmitted least significant data bit (D0) first.

図 6-21 shows the data structure of the UBM write command, and 図 6-22 shows the data structure of the UBM read command.

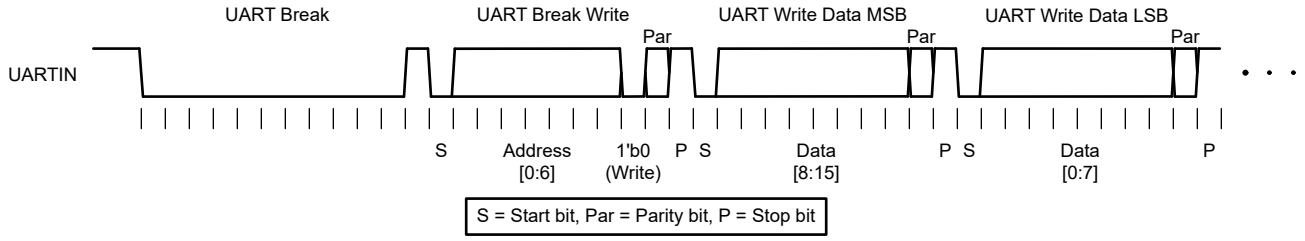

図 6-21. UARTIN Break Write Data Format

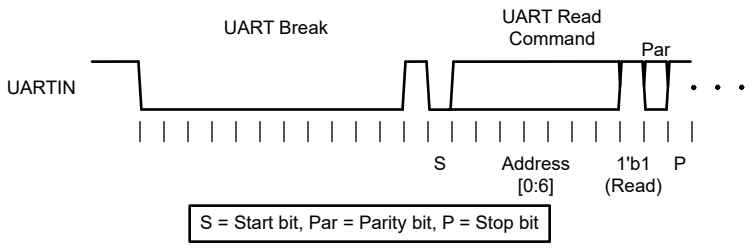

図 6-22. UARTIN Break Read Data Format

図 6-23 shows the UARTOUT data frame with details of the status bits produced by the AFEx8201. See 表 6-10 for details.

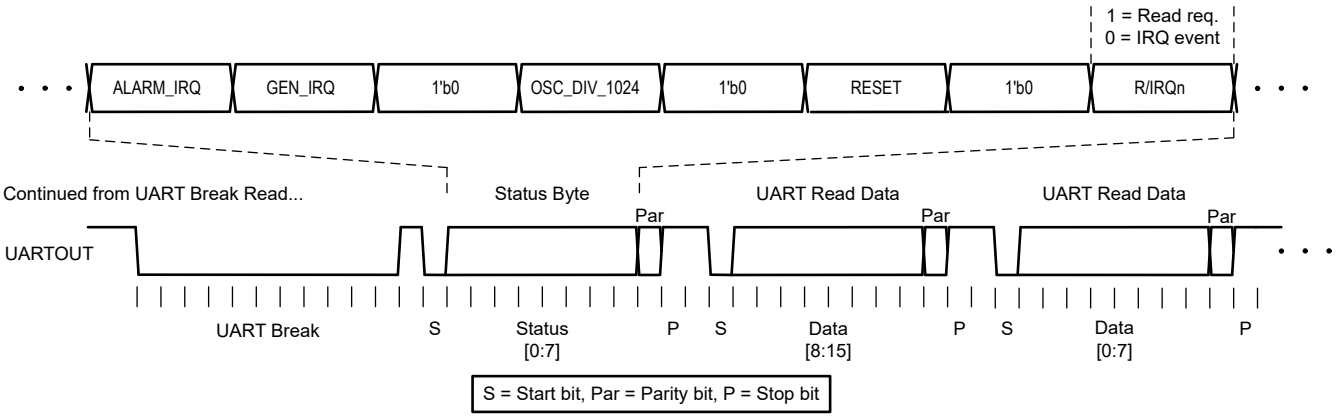

図 6-23. UARTOUT Break Data Format

Copyright © 2024 Texas Instruments Incorporated

6.5.5 Status Bits

In SPI mode and UBM, every response from the AFEx8201 includes a set of status bits. For SPI mode bit order, see セクション 6.5.3.1. For UBM bit order, セクション 6.5.4.1.

表 6-10. Status Bits

STATUS BIT	DESCRIPTION	NOTES / REFERENCE
ALARM_IRQ	1h = ALARM_IRQ asserted 0h = Normal operation	From the GEN_STATUS[(1)] register (表 7-29). See also セクション 6.3.4.
CRC_ERR (CRC enabled SPI only)	1h = CRC error detect in input frame 0h = No CRC error detected	Generated by the SPI on a frame by frame basis. See セクション 6.5.3.3.
GEN_IRQ	1h = GEN_IRQ asserted 0h = Normal Operation	From the ALARM_STATUS[(1)] register (表 7-28). See also セクション 6.3.4.
OSC_DIV_1024 (UBM mode)	1h = Sampled signal is high 0h = Sampled signal is low	Subdivided internal oscillator clock signal (frequency divided by 1024) sampled at the falling edge of the status byte start bit. See also セクション 6.3.7.
OSC_DIV_2 (SPI mode)	1h = Sampled signal is high 0h = Sampled signal is low	Subdivided internal oscillator clock signal (frequency divided by 2) sampled at $\overline{CS}$ falling edge. See also セクション 6.3.7.
R/IRQn (UBM only)	1h = Read request 0h = IRQ event	Generated by the UART interface on a frame by frame basis. See セクション 6.5.4.1 for details.
RBIST	1h = RBIST busy (registers not readable) 0h = RBIST done (registers readable)	RBIST running status. See セクション 6.4.1 for details.
RESET	1h = First readback after RESET 0h = All other readbacks	From the GEN_STATUS register (表 7-29). See also セクション 6.4.3.

(1) ALARM_STATUS, and GEN_STATUS registers contain cross-readable IRQ flags for the other register. The ALARM_STATUS register has the GEN_IRQ bit. GEN_STATUS has the ALARM_IRQ bit. This functionality enables the system microcontroller to always get full status information by reading only one register, and thus save power.

6.5.6 Watchdog Timer

The AFEx8201 include a watchdog timer (WDT) that is used to make sure that communication between the system controller and the device is not lost. The WDT checks that the device received a communication from the system controller within a programmable period of time. To enable this feature, set WDT.WDT_EN to 1. The WDT monitors both SPI and UBM communications.

The WDT has two limit fields: WDT.WDT_UP and WDT.WDT_LO. The WDT_UP field sets the upper time limit for the WDT. The WDT_LO field sets the lower time limit. If the WDT_LO is set to a value other than 2'b00, then the WDT acts as a window comparator. If the write occurs too quickly (less than the WDT_LO time), or too slowly (greater than the WDT_UP time), then a WDT error is asserted. When acting as a window comparator, in the event of a WDT error, the WDT resets only when a write to the WDT register occurs. If the WDT_LO is set to 2'b00, then a write to any register resets the WDT time counter. In this mode, the WDT error is asserted when the timer expires.

If enabled, the chip must have any SPI or UBM write to the device within the programmed timeout window. Otherwise, the $\overline{ALARM}$ pin asserts low, and the ALARM_STATUS.WD_FLT bit is set to 1. The WD_FLT bit is sticky. After a WD_FLT has been asserted, WDT.WDT_EN must be set to 0 to clear the WDT condition. Then the WDT can be re-enabled. The WDT condition is also cleared by issuing a software or hardware reset. After the WDT condition is clear, WD_FLT is cleared by reading the ALARM_STATUS register.

When using multiple AFEx8201 devices in a daisy-chain configuration, connect the open-drain $\overline{ALARM}$ pins of all devices together to form a wired-OR network. The watchdog timer can be enabled in any number of the devices in the chain; although, enabling the watchdog timer in one device in the chain is usually sufficient. The wired-OR $\overline{ALARM}$ pin can be pulled low in response to the simultaneous presence of different trigger conditions in the devices in the daisy-chain. The host processor must read the ALARM_STATUS register of each device to know all the fault conditions present in the chain.

The watchdog timeout period is based on a 1200-Hz clock (1.2288 MHz / 1024).

7 Register Maps

表 7-1 lists the memory-mapped registers for the AFEx8201 registers. Consider all register offset addresses not listed in 表 7-1 as reserved locations; do not modify these register contents.

表 7-1. Register Map

ADDR (HEX)	REGISTER	BIT DESCRIPTION															
		15	14	13	12	11	10	9	8	7	6	5	4	3	2	1	0
00h	NOP	NOP [15:0]															
01h	DAC_DATA	DATA [15:0]															
02h	CONFIG	CRC_ERR_CNT [1:0]		CLKO [3:0]				UBM_ IRQ_EN	IRQ_ PIN_EN	CLR_ PIN_EN	UART_DIS	RESERVED	CRC_EN	IRQ_POL	IRQ_LVL	DSDO	FSDO
03h	DAC_CFG	RESERVED			PD	SR_CLK [2:0]			SR_STEP [2:0]			SR_EN	SR_MODE	RESERVED	CLR	RESERVED	
04h	DAC_GAIN	GAIN [15:0]															
05h	DAC_OFFSET	OFFSET [15:0]															
06h	DAC_CLR_ CODE	CODE [15:0]															
07h	RESET	RESERVED								SW_RST [7:0]							
08h	ADC_CFG	BUF_PD	HYST [6:0]							FLT_CNT [2:0]			AIN_ RANGE	EOC_ PER_CH	CONV_RATE [1:0]		DIRECT_ MODE
09h	ADC_INDEX_ CFG	RESERVED								STOP [3:0]				START [3:0]			
0Ah	TRIGGER	RESERVED												RBIST	RESERVED	SHADOW LOAD	ADC
0Bh	SPECIAL_ CFG (1)	RESERVED													OTP_ LOAD_ SW_RST	ALMV_ POL	AIN1_ENB
10h	ALARM_ACT	SD_FLT [1:0]		TEMP_FLT [1:0]		AIN1_FLT [1:0]		AIN0_FLT [1:0]		CRC_WDT_FLT [1:0]		VREF_FLT [1:0]		THERM_ERR_FLT [1:0]		THERM_WARN_FLT [1:0]	
11h	WDT	RESERVED										WDT_UP [2:0]			WDT_LO [1:0]		WDT_EN
12h	AIN0_ THRESHOLD	Hi [7:0]								Lo [7:0]							
13h	AIN1_ THRESHOLD	Hi [7:0]								Lo [7:0]							
14h	TEMP_ THRESHOLD	Hi [7:0]								Lo [7:0]							
16h	UBM (2)	RESERVED															REG_ MODE
18h	SCRATCH	DATA [15:0]															
19h	CHIP_ID_LSB	ID [15:0]															
1Ah	CHIP_ID_MSB	ID [15:0]															
1Bh	GPIO_CFG	RESERVED	EN [6:0]							RESERVED	ODE [6:0]						
1Ch	GPIO	RESERVED									DATA [6:0]						
1Dh	ALARM_ STATUS_MASK	RESERVED		SD_FLT	OSC_FAIL	RESERVED			OTP_ CRC_ERR	CRC_FLT	WD_FLT	VREF_FLT	ADC_ AIN1_FLT	ADC_ AIN0_FLT	ADC_ TEMP_ FLT	THERM_ ERR_FLT	THERM_ WARN_ FLT

Copyright © 2024 Texas Instruments Incorporated

表 7-1. Register Map (続き)

ADDR (HEX)	REGISTER	BIT DESCRIPTION															
		15	14	13	12	11	10	9	8	7	6	5	4	3	2	1	0
1Eh	GEN_ STATUS_MASK	RESERVED					RBIST_ DONE	RBIST_ FAIL	RESERVED	SR_ BUSYn	ADC_ EOC	RESERVED		BREAK_ FRAME_ ERR	BREAK_ PARITY_ ERR	UART_ FRAME_ ERR	UART_ PARITY_ ERR
20h	ALARM_ STATUS	GEN_ IRQ	RESERVED	SD_FLT	OSC_FAIL	CRC_CNT [1:0]		OTP_ LOADEDn	OTP_ CRC_ERR	CRC_FLT	WD_FLT	VREF_FLT	ADC_ AIN1_FLT	ADC_ AIN0_FLT	ADC_ TEMP_ FLT	THERM_ ERR_FLT	THERM_ WARN_ FLT
21h	GEN_ STATUS	ALARM_ IRQ	RESERVED		OTP_ BUSY	RBIST_ MODE	RBIST_ DONE	RBIST_ FAIL	RESET	SR_ BUSYn	ADC_ EOC	ADC_ BUSY	PVDD_HI	BREAK_ FRAME_ ERR	BREAK_ PARITY_ ERR	UART _FRAME _ERR	UART_ PARITY_ ERR
23h	ADC_FLAGS	RESERVED							SD4_FAIL	SD3_FAIL	SD2_FAIL	SD1_FAIL	SD0_FAIL	TEMP_ FAIL	AIN1_ FAIL	AIN0_ FAIL	RESERVED
24h	ADC_AIN0	RESERVED				DATA [11:0]											
25h	ADC_AIN1	RESERVED				DATA [11:0]											
26h	ADC_TEMP	RESERVED				DATA [11:0]											
27h	ADC_SD_MUX	RESERVED				DATA [11:0]											
28h	ADC_OFFSET	RESERVED				DATA [11:0]											
2Ch	DAC_OUT	DATA [15:0]															
2Dh	ADC_OUT	RESERVED				DATA [11:0]											
2Eh	ADC_BYP	DATA_ BYP_EN	OFST_ BYP_EN	DIS_GND_ SAMP	RESERVED	DATA [11:0]											
2Fh	FORCE_FAIL	CRC_FLT	VREF_FLT	THERM_ ERR_FLT	THERM_ WARN_ FLT	RESERVED		SD4_HI_ FLT	SD4_LO_ FLT	SD3_HI_ FLT	SD3_LO_ FLT	SD2_HI_ FLT	SD2_LO_ FLT	SD1_HI_ FLT	SD1_LO_ FLT	SD0_HI_ FLT	SD0_LO_ FLT
3Bh	TIMER_CFG_0	RESERVED												CLK_SEL [1:0]		INVERT	ENABLE
3Ch	TIMER_CFG_1	PERIOD [15:0]															
3Dh	TIMER_CFG_2	SET_TIME [15:0]															
3Eh	CRC_RD	CRC [15:0]															
3Fh	RBIST_CRC	CRC [15:0]															

(1) The SPECIAL_CFG register can only be reset with POR, and does not respond to the $\overline{\text{RESET}}$ pin or SW_RST command.
(2) The UBM register can only be accessed with a UBM command.

7.1 AFEx8201 Registers

Complex bit access types are encoded to fit into small table cells. The following table shows the codes that are used for access types in this section.

表 7-2. AFEx8201 Access-Type Codes

Access Type	Code	Description
Read Type		
R	R	Read
Write Type		
W	W	Write
W	WO	Write only
W	WSC	Write self clear
Reset or Default Value		
-n		Value after reset or the default value
Register Array Variables		
i,j,k,l,m,n		When used in a register name, an offset, or an address, these variables refer to the value of a register array where the register is part of a group of repeating registers. The register groups form a hierarchical structure and the array is represented with a formula.
y		When used in a register name, an offset, or an address, this variable refers to the value of a register array.

7.1.1 NOP Register (Offset = 0h) [Reset = 0000h]

Return to the Register Map .

表 7-3. NOP Register Field Descriptions

Bit	Field	Type	Reset	Description
15-0	NOP	WO	0h	No operation. Data written to this field have no effect. Always reads zeros.

7.1.2 DAC_DATA Register (Offset = 1h) [Reset = 0000h]

Return to the Register Map .

DAC code for VOUT.

表 7-4. DAC_DATA Register Field Descriptions

Bit	Field	Type	Reset	Description
15-0	DATA	R/W	0h	Data. DAC code for VOUT.

Copyright © 2024 Texas Instruments Incorporated

7.1.3 CONFIG Register (Offset = 2h) [Reset = 0036h]

Return to the Register Map .

表 7-5. CONFIG Register Field Descriptions

Bit	Field	Type	Reset	Description
15-14	CRC_ERR_CNT	R/W	0h	CRC Errors Count Limit Sets the numbers of consecutive SPI CRC frames that must have errors before the status bits is set. 0h = 1 (default); 1h = 2; 2h = 4; 3h = 8
13-10	CLKO	R/W	0h	CLKO Enable Enable the CLK_OUT pin and set the divider value. 0h = CLKO disabled (default); 1h = 1.2288 MHz; 2h = 1.2288 / 2 MHz; 3h = 1.2288 / 4 MHz; 4h = 1.2288 / 8 MHz; 5h = 1.2288 / 16 MHz; 6h =1.2288 / 32 MHz; 7h = 1.2288 / 64 MHz; 8h = 1.2288 / 128 MHz; 9h = 1.2288 / 256 MHz; Ah = 1.2288 / 512 MHz; Bh = 1.2288 / 1024 MHz; Ch = 1'b0; Dh = 1'b0; Eh = 1'b0; Fh = Timer
9	UBM_IRQ_EN	R/W	0h	UBM IRQ Enable Enable IRQ to be sent on UARTOUT through UBM. 0h = Disabled (default); 1h = Enabled
8	IRQ_PIN_EN	R/W	0h	IRQ Pin Enable Enable IRQ pin functionality. 0h = Disabled (default); 1h = Enabled
7	CLR_PIN_EN	R/W	0h	Clear Input Pin Enable Enable pin-based transition to the CLEAR state in UBM and SPI. 0h = Disabled (default); 1h = SCLR pin enabled in SPI mode or SDI pin configured as clear input pin in UBM
6	UART_DIS	R/W	0h	UART Disable Disable UART functionality. 0h = UART Enabled (default); 1h = UART Disabled
5	RESERVED	R	1h	Reserved. Always set this bit to 1h for proper functionality.
4	CRC_EN	R/W	1h	CRC Enable Enable CRC for SPI. 0h = Disabled; 1h = Enabled (default)
3	IRQ_POL	R/W	0h	IRQ Polarity 0h = Active low (default); 1h = Active high
2	IRQ_LVL	R/W	1h	IRQ Level 0h = Edge sensitive; 1h = Level sensitive (default)
1	DSDO	R/W	1h	SDO Hi-Z 0h = Drive SDO during $\overline{CS}$ = 0; 1h = SDO always Hi-Z (default)
0	FSDO	R/W	0h	Fast SDO SDO is driven on negative edge of SCLK. 0h = drive SDO on rising edge of SCLK (launching edge) (default) 1h = drive SDO on falling edge of SCLK (capture edge 1/2 clock early)

Copyright © 2024 Texas Instruments Incorporated

7.1.4 DAC_CFG Register (Offset = 3h) [Reset = 0B00h]

Return to the Register Map .

表 7-6. DAC_CFG Register Field Descriptions

Bit	Field	Type	Reset	Description
15-13	RESERVED	R/W	0h	
12	PD	R/W	0h	DAC Output Buffer Power-down DAC output set to Hi-Z in power-down. 0h = DAC output buffer enabled (default) 1h = DAC output buffer disabled
11-9	SR_CLK	R/W	5h	Slew Clock Rate 0h = 307.2 kHz 1h = 153.6 kHz 2h = 76.8 kHz 3h = 38.4 kHz 4h = 19.2 kHz 5h = 9600 Hz (default) 6h = 4800 Hz 7h = 2400 Hz
8-6	SR_STEP	R/W	4h	Slew Step Size 0h = 1 code 1h = 2 codes 2h = 4 codes 3h = 8 codes 4h = 16 codes (default) 5h = 32 codes 6h = 64 codes 7h = 128 codes
5	SR_EN	R/W	0h	Slew Enable Enables slew on the output voltage. 0h = Disabled (default) 1h = Enabled
4	SR_MODE	R/W	0h	Slew Mode Output slew rate mode select. 0h = Linear Slew (default) 1h = Sinusoidal Slew
3	RESERVED	R	0h	
2	CLR	R/W	0h	CLEAR State 0h = Normal operation (default) 1h = Force the DAC to the CLEAR state
1-0	RESERVED	R	0h	

Copyright © 2024 Texas Instruments Incorporated

7.1.5 DAC_GAIN Register (Offset = 4h) [Reset = 8000h]

Return to the Register Map .

表 7-7. DAC_GAIN Register Field Descriptions

Bit	Field	Type	Reset	Description
15-0	GAIN	R/W	8000h	Gain Set the gain of the DAC output from 0.5 – 1.499985. For example: 0000h = 0.5 8000h = 1.0 (default) FFFFh = 1.499985

7.1.6 DAC_OFFSET Register (Offset = 5h) [Reset = 0000h]

Return to the Register Map .

表 7-8. DAC_OFFSET Register Field Descriptions

Bit	Field	Type	Reset	Description
15-0	OFFSET	R/W	0h	Offset Adjust the offset of the DAC output, 2's complement number. For example: 0000h = 0 (default) FFFFh = –1

7.1.7 DAC_CLR_CODE Register (Offset = 6h) [Reset = 0000h]

Return to the Register Map .

表 7-9. DAC_CLR_CODE Register Field Descriptions

Bit	Field	Type	Reset	Description
15-0	CODE	R/W	0h	CLEAR State DAC Code DAC code applied in the CLEAR state. See セクション 6.3.1.6.

7.1.8 RESET Register (Offset = 7h) [Reset = 0000h]

Return to the Register Map .

表 7-10. RESET Register Field Descriptions

Bit	Field	Type	Reset	Description
15-8	RESERVED	R	0h	
7-0	SW_RST	WSC	0h	Software Reset Write ADh to initiate software reset.

7.1.9 ADC_CFG Register (Offset = 8h) [Reset = 8810h]

Return to the Register Map .

表 7-11. ADC_CFG Register Field Descriptions

Bit	Field	Type	Reset	Description
15	BUF_PD	R/W	1h	ADC Buffer Power-Down 0h = ADC buffer enabled; 1h = ADC buffer powered down (default)
14-8	HYST	R/W	8h	Hysteresis The number of codes of hysteresis used when a threshold is exceeded for an ADC measurement of AIN0/AIN1/TEMP.
7-5	FLT_CNT	R/W	0h	Fault Count Number of successive faults to trip an alarm. Number of successive faults is programmed value + 1 (1-8 faults).
4	AIN_RANGE	R/W	1h	ADC Analog Input Range Can only be set if PVDD ≥ 2.7 V to use 2.5-V range for AIN0 and AIN1 inputs. 0h = 2 × VREF; 1h = 1 × VREF (default)
3	EOC_PER_CH	R/W	0h	ADC End-of-Conversion for Every Channel Sends an EOC pulse at the end of each channel instead of at the end of all the channels. 0h = EOC after last channel (default); 1h = EOC for every channel
2-1	CONV_RATE	R/W	0h	ADC Conversion Rate This setting only affects the conversion rate for channels AIN0 and AIN1. Rates are based on a 76.8-kHz ADC clock. All other channels use 2560 Hz. 0h = 3840 Hz (default) 1h = 2560 Hz 2h = 1280 Hz 3h = 640 Hz
0	DIRECT_MODE	R/W	0h	Direct Mode Enable 0h = Auto mode (default); 1h = Direct mode

7.1.10 ADC_INDEX_CFG Register (Offset = 9h) [Reset = 0080h]

Return to the Register Map .

The ADC custom channel sequencing configuration is shown in 表 7-12.

表 7-12. ADC_INDEX_CFG Register Field Descriptions

Bit	Field	Type	Reset	Description
15-8	RESERVED	R	0h	
7-4	STOP	R/W	8h	Custom Channel Sequencer Stop Index CCS index to stop ADC sequence. Must be ≥ START. If not, STOP is forced to = START. 0h = OFFSET 1h = AIN0 2h = AIN1 3h = TEMP 4h = SD0 (VREF) 5h = SD1 (PVDD) 6h = SD2 (VDD) 7h = SD3 (ZTAT) 8h = SD4 (VOUT) (default) 9h through Fh = GND
3-0	START	R/W	0h	Custom Channel Sequencer Start Index CCS index to start ADC sequence. 0h through Fh = Same as STOP field (0h is default)

Copyright © 2024 Texas Instruments Incorporated

7.1.11 TRIGGER Register (Offset = Ah) [Reset = 0000h]

Return to the Register Map .

表 7-13. TRIGGER Register Field Descriptions

Bit	Field	Type	Reset	Description
15-4	RESERVED	R	0h	
3	RBIST	WSC	0h	RBIST Trigger This trigger initiates a Register BIST. This BIST runs a CRC calculation through the configuration registers (表 6-7) and compares the result to a stored CRC value in the RBIST_CRC register.
2	RESERVED	R	0h	
1	SHADOWLOAD	WSC	0h	Shadow Load Trigger This trigger initiates the loading of the OTP array into the parallel latches. If an OTP CRC error is detected, assert this trigger to try and reload the OTP into the memory locations.
0	ADC	WSC	0h	ADC Trigger In auto mode, this bit enables or disables the conversions. Manually set to 1 (enable) or 0 (disable). In direct mode, set this bit to start a conversion sequence. The bit is cleared at the end of the sequence. To stop a sequence prematurely, manually clear this bit.

7.1.12 SPECIAL_CFG Register (Offset = Bh) [Reset = 0000h]

Return to the Register Map .

表 7-14. SPECIAL_CFG Register Field Descriptions

Bit	Field	Type	Reset	Description
15-3	RESERVED	R	0h	
2	OTP_LOAD_SW_RST	R/W	0h	OTP (One Time Programmable Factory Trimmed Registers) LOAD with SW RESET OTP reloads with the assertion of a software reset (SW_RST). 0h = No reload with SW_RST 1h = Reload with SW_RST
1	ALMV_POL	R/W	0h	Alarm Voltage Polarity This register bit is ORed with the POL_SEL/AIN1 pin (if AIN1_ENB bit is low) to control the VOUT during a hardware reset condition or if alarm is active and alarm action is set appropriately. The following Boolean function is implemented for the internal signal ALMV_POL_o that sets the VOUT voltage: ALMV_POL_o = ALMV_POL OR (POL_SEL/AIN1 AND NOT AIN1_ENB) 0h = Low (0 V) 1h = High (2.5 V)
0	AIN1_ENB	R/W	0h	AIN1 Pin Enable This bit determines whether the POL_SEL/AIN1 pin acts as alarm voltage polarity control bit or an input channel to the ADC. 0h = AIN1 pin acts as alarm voltage polarity bit and ADC converts GND 1h = AIN1 pin is an active channel to the ADC

7.1.13 ALARM_ACT Register (Offset = 10h) [Reset = 8020h]

Return to the Register Map .

表 7-15. ALARM_ACT Register Field Descriptions

Bit	Field	Type	Reset	Description
15-14	SD_FLT	R/W	2h	Self-Diagnostic Fault Action These bits set the device action after a self-diagnostic fault. 0h = No Action 1h = Set DAC to CLEAR state 2h = Switch to alarm voltage determined by ALMV_POL (default) 3h = Place DAC into Hi-Z (power-down)
13-12	TEMP_FLT	R/W	0h	TEMP Fault Action These bits set the device action if the ADC temperature is outside the TEMP_THRESHOLD Hi or Lo thresholds. 0h through 3h = Same as SD_FLT field (default 0h)
11-10	AIN1_FLT	R/W	0h	AIN1 Fault Action These bits set the device action if the ADC AIN1 channel is outside the AIN1_THRESHOLD Hi or Lo thresholds. 0h through 3h = Same as SD_FLT field (default 0h)
9-8	AIN0_FLT	R/W	0h	AIN0 Fault Action These bits set the device action if the ADC AIN0 channel is outside the AIN0_THRESHOLD Hi or Lo thresholds. 0h through 3h = Same as SD_FLT field (default 0h)
7-6	CRC_WDT_FLT	R/W	0h	CRC and WDT Fault Action These bits set the device action when a SPI CRC or SPI Watchdog Timeout error occurs. 0h through 3h = Same as SD_FLT field (default 0h)
5-4	VREF_FLT	R/W	2h	VREF Fault Action These bits set the device action when a fault is detected on VREF. 0h through 3h = Same as SD_FLT field a
3-2	THERM_ERR_FLT	R/W	0h	Thermal Error Fault Action These bits set the device action when a high temperature error occurs (> 130°C). 0h through 3h = Same as SD_FLT field (default 0h)
1-0	THERM_WARN_FLT	R/W	0h	Thermal Warning Fault Action These bits set the device action when a high temperature warning occurs (> 85°C). 0h through 3h = Same as SD_FLT field (default 0h)

Copyright © 2024 Texas Instruments Incorporated

7.1.14 WDT Register (Offset = 11h) [Reset = 0018h]

Return to the Register Map .

表 7-16. WDT Register Field Descriptions

Bit	Field	Type	Reset	Description
15-6	RESERVED	R	0h	
5-3	WDT_UP	R/W	3h	Watchdog Timer (WDT) Upper Limit If the WDT is enabled and the timer exceeds the programmed value, a WDT error is asserted. All times are based on 1200-Hz clock (1.2288 MHz / 1024). 0h = 53 ms (64 clocks) 1h = 106 ms (128 clocks) 2h = 427 ms (512 clocks) 3h = 853 ms (1024 clocks, default) 4h = 1.7 s (2048 clocks) 5h = 2.56 s (3072 clocks) 6h = 3.41 s (4096 clocks) 7h = 5.12 s (6144 clocks)
2-1	WDT_LO	R/W	0h	WDT Lower Limit If the WDT is enabled and the WDT Lower Limit is enabled, then only a write to this register resets the WDT timer. If the write occurs before the WDT Lower Limit time, or after the WDT Upper Limit time, then a WDT error is asserted. If WDT Lower Limit is disabled, then a write to any register resets the timer. This is true for both SPI and UART Break modes. All times are based on 1200-Hz clock (1.2288 MHz / 1024). 0h = Disabled (default) 1h = 53 ms (64 clocks) 2h = 106 ms (128 clocks) 3h = 427 ms (512 clocks)
0	WDT_EN	R/W	0h	WDT Enable 0h = Disabled (default); 1h = Enabled

7.1.15 AIN0_THRESHOLD Register (Offset = 12h) [Reset = FF00h]

Return to the Register Map .

表 7-17. AIN0_THRESHOLD Register Field Descriptions

Bit	Field	Type	Reset	Description
15-8	Hi	R/W	FFh	High Threshold for Channel AIN0 {[11:4],4b1111} This value is compared (>) against AIN0 data bits[11:0].
7-0	Lo	R/W	0h	Low Threshold for Channel AIN0 {[11:4],4b0000} This value is compared (<) against AIN0 data bits[11:0].

7.1.16 AIN1_THRESHOLD Register (Offset = 13h) [Reset = FF00h]

Return to the Register Map .

表 7-18. AIN1_THRESHOLD Register Field Descriptions

Bit	Field	Type	Reset	Description
15-8	Hi	R/W	FFh	High Threshold for Channel AIN1 {[11:4],4b1111} This value is compared (>) against AIN1 data bits[11:0].
7-0	Lo	R/W	0h	Low Threshold for Channel AIN1 {[11:4],4b0000} This value is compared (<) against AIN1 data bits[11:0].

7.1.17 TEMP_THRESHOLD Register (Offset = 14h) [Reset = FF00h]

Return to the Register Map .

表 7-19. TEMP_THRESHOLD Register Field Descriptions

Bit	Field	Type	Reset	Description
15-8	Hi	R/W	FFh	High Threshold for Channel TEMP {[11:4],4b1111} This value is compared (>) against TEMP data bits[11:0].
7-0	Lo	R/W	0h	Low Threshold for Channel TEMP {[11:4],4b0000} This value is compared (<) against TEMP data bits[11:0].

7.1.18 UBM Register (Offset = 16h) [Reset = 0000h]

Return to the Register Map .

表 7-20. UBM Register Field Descriptions

Bit	Field	Type	Reset	Description
15-1	RESERVED	R	0h	
0	REG_MODE	R/W	0h	Register Mode Configure the rest of the Register Map to be accessed by UART break mode (UBM) or SPI. This register can only be written by the UART Break communication. 0h = SPI Mode (default) 1h = UART Break Mode

7.1.19 SCRATCH Register (Offset = 18h) [Reset = FFFFh]

Return to the Register Map .

表 7-21. SCRATCH Register Field Descriptions

Bit	Field	Type	Reset	Description
15-0	DATA	R/W	FFFFh	Scratch Data Data written is read back as the inverted value. For example, writing 0xAAAA is read back as 0x5555.

7.1.20 CHIP_ID_LSB Register (Offset = 19h)

Return to the Register Map .

表 7-22. CHIP ID LSB Register Field Descriptions

Bit	Field	Type	Reset	Description
15-0	ID	R		Unique part number within each lot

7.1.21 CHIP_ID_MSB Register (Offset = 1Ah)

Return to the Register Map .

表 7-23. CHIP ID MSB Register Field Descriptions

Bit	Field	Type	Reset	Description
15-0	ID	R		Encoded lot identification number

Copyright © 2024 Texas Instruments Incorporated

7.1.22 GPIO_CFG Register (Offset = 1Bh) [Reset = 00FFh]

Return to the Register Map .

表 7-24. GPIO CONFIG Register Field Descriptions

Bit	Field	Type	Reset	Description
15	RESERVED	R	0h	
14-8	EN	R/W	00h	GPIO per Pin Enable. (See 表 6-8 for additional configuration required specific to each pin and communication mode) [14] = GPIO6 [13] = GPIO5 [12] = GPIO4 [11] = GPIO3 [10] = GPIO2 [9] = GPIO1 [8] = GPIO0 0h = GPIO function disable 1h = GPIO function enabled For any pin used either for the communication function or not used as an active GPIO, set this bit to 0h.
7	RESERVED	R	0h	
6-0	ODE	R/W	FFh	Pseudo Open Drain Enable GPIO output enable and pseudo open drain functionality on the GPIO pins. (See 表 6-8 for additional configuration required specific to each pin and communication mode.) [6] = GPIO6 [5] = GPIO5 [4] = GPIO4 [3] = GPIO3 [2] = GPIO2 [1] = GPIO1 [0] = GPIO0 0h = Push-pull output enabled 1h = Pseudo open-drain output enabled

7.1.23 GPIO Register (Offset = 1Ch) [Reset = 007Fh]

Return to the Register Map .

表 7-25. GPIO Register Field Descriptions

Bit	Field	Type	Reset	Description
15-7	RESERVED	R	0h	
6-0	DATA	R/W	7Fh	GPIO pin data. For GPIO input this bit must be written as 1 and GPIO_CFG.ODE = 1 and GPIO_CFG.EN = 1. Reading this register reads the pin value when the pin is correctly enabled. (See 表 6-8 for additional configuration required specific to each pin and communication mode) For GPIO output this bit sets the pin value. [6] = GPIO6 [5] = GPIO5 [4] = GPIO4 [3] = GPIO3 [2] = GPIO2 [1] = GPIO1 [0] = GPIO0

Copyright © 2024 Texas Instruments Incorporated

7.1.24 ALARM_STATUS_MASK Register (Offset = 1Dh) [Reset = EFDFh]

Return to the Register Map .

表 7-26. ALARM_STATUS_MASK Register Field Descriptions

Bit	Field	Type	Reset	Description
15-14	RESERVED	R	3h	
13	SD_FLT	R/W	1h	SD Fault Mask 0h = Fault asserts IRQ 1h = The mask prevents IRQ or Alarm being triggered (default). The status is always set if the condition exists.
12	OSC_FAIL	R/W	0h	OSC_FAIL Fault Mask Same as SD Fault Mask (default 0h).
11-9	RESERVED	R	7h	
8	OTP_CRC_ERR	R/W	1h	OTP CRC Error Mask Same as SD Fault Mask (default 1h).
7	CRC_FLT	R/W	1h	SPI CRC Fault Mask Same as SD Fault Mask (default 1h).
6	WD_FLT	R/W	1h	Watchdog Fault Mask Same as SD Fault Mask (default 1h).
5	VREF_FLT	R/W	0h	VREF Fault Mask Same as SD Fault Mask (default 0h).
4	ADC_AIN1_FLT	R/W	1h	ADC AIN1 Fault Mask Same as SD Fault Mask (default 1h).
3	ADC_AIN0_FLT	R/W	1h	ADC AIN0 Fault Mask Same as SD Fault Mask (default 1h).
2	ADC_TEMP_FLT	R/W	1h	ADC TEMP Fault Mask Same as SD Fault Mask (default 1h).
1	THERM_ERR_FLT	R/W	1h	Temperature > 130°C Error Mask Same as SD Fault Mask (default 1h).
0	THERM_WARN_FLT	R/W	1h	Temperature > 85°C Warning Mask Same as SD Fault Mask (default 1h).

Copyright © 2024 Texas Instruments Incorporated

7.1.25 GEN_STATUS_MASK Register (Offset = 1Eh) [Reset = FFFFh]

Return to the Register Map .

表 7-27. GEN_STATUS_MASK Register Field Descriptions

Bit	Field	Type	Reset	Description
15-11	RESERVED	R	1Fh	
10	RBIST_DONE	R/W	1h	RBIST Done Mask 0h = Fault asserts IRQ 1h = The mask prevents IRQ or Alarm being triggered (default). The status is always set if the condition exists.
9	RBIST_FAIL	R/W	1h	RBIST Failed Fault Mask Same as RBIST Done Mask (default 1h).
8	RESERVED	R	1h	
7	SR_BUSYn	R/W	1h	Slew Rate Not Busy Mask Same as RBIST Done Mask (default 1h).
6	ADC_EOC	R/W	1h	ADC End Of Conversion Mask Same as RBIST Done Mask (default 1h).
5-4	RESERVED	R	3h	
3	BREAK_FRAME_ERR	R/W	1h	Break Frame Error Fault Mask Same as RBIST Done Mask (default 1h).
2	BREAK_PARITY_ERR	R/W	1h	Break Parity Error Fault Mask Same as RBIST Done Mask (default 1h).
1	UART_FRAME_ERR	R/W	1h	UART Frame Error Fault Mask Same as RBIST Done Mask (default 1h).
0	UART_PARITY_ERR	R/W	1h	UART Parity Error Fault Mask Same as RBIST Done Mask (default 1h).

Copyright © 2024 Texas Instruments Incorporated

7.1.26 ALARM_STATUS Register (Offset = 20h) [Reset = 0200h]

Return to the Register Map .

表 7-28. ALARM_STATUS Register Field Descriptions

Bit	Field	Type	Reset	Description
15	GEN_IRQ	R	0h	General IRQ OR of all the unmasked bits in the GEN_STATUS register. 0h = All of the unmasked bits of the GEN_STATUS register are low 1h = At least one of the unmasked bits in the GEN_STATUS register is high
14	RESERVED	R	0h	
13	SD_FLT	R	0h	Self Diagnostic (SD) Fault 0h = All self diagnostic channels are within threshold limits 1h = At least one of the self diagnostic channels has failed
12	OSC_FAIL	R	0h	Oscillator Fault Oscillator failed to start. This bit holds $\overline{\text{ALARM}}$ low and does not feed IRQ. 0h = Oscillator started; 1h = Oscillator has failed to start
11-10	CRC_CNT	R	0h	CRC Fault Counter If counter limit ≤ 4 then bits[1:0] of the counter are shown here. If the counter limit = 8 then bits[2:1] of the counter are shown.
9	OTP_LOADEDn	R	1h	OTP NOT Loaded Clears when OTP has loaded at least once. Keeps $\overline{\text{ALARM}}$ asserted until OTP finishes loading. Does not feed IRQ. 0h = OTP has loaded at least once; 1h = OTP has not finished loading
8	OTP_CRC_ERR	R	0h	OTP CRC Error Maskable fault. An error occurred with the OTP CRC calculation. Sticky, cleared by reading register, unless condition still persist. 0h = No OTP CRC fault; 1h = OTP CRC fault
7	CRC_FLT	R	0h	CRC Fault Maskable fault. Invalid CRC value transmitted during SPI frame. Sticky, cleared by reading register, unless condition still persist. 0h = No CRC fault; 1h = CRC fault
6	WD_FLT	R	0h	Watchdog Timer Fault Maskable fault. Sticky, cleared by reading register, unless condition still persist. 0h = No watchdog fault; 1h = Watchdog fault
5	VREF_FLT	R	0h	Invalid Reference Voltage Maskable fault. OR with FORCE_FAIL.VREF_FLT bit. Active signal, set as long as condition is true. Direct input from analog circuit. 0h = Valid VREF voltage; 1h = Invalid VREF voltage
4	ADC_AIN1_FLT	R	0h	ADC AIN1 Fault. Maskable fault. 0h = AIN1 ADC measurement within threshold limits 1h = AIN1 ADC measurement outside threshold limits
3	ADC_AIN0_FLT	R	0h	ADC AIN0 Fault. Maskable fault. 0h = AIN0 ADC measurement within threshold limits 1h = AIN0 ADC measurement outside threshold limits
2	ADC_TEMP_FLT	R	0h	ADC Temp Fault. Maskable fault. 0h = TEMP ADC measurement within threshold limits 1h = TEMP ADC measurement outside threshold limits
1	THERM_ERR_FLT	R	0h	Temperature > 130°C error. Maskable fault. OR with FORCE_FAIL.THERM_ERR_FLT bit. Active signal, set as long as condition is true. Direct input from analog circuit. 0h = Temperature ≤ 130°C; 1h = Temperature > 130°C
0	THERM_WARN_FLT	R	0h	Temperature > 85°C warning. Maskable fault. OR with FORCE_FAIL.THERM_WARN_FLT bit. Active signal, set as long as condition is true. Direct input from analog circuit. 0h = Temperature ≤ 85°C; 1h = Temperature > 85°C

Copyright © 2024 Texas Instruments Incorporated

7.1.27 GEN_STATUS Register (Offset = 21h) [Reset = 1180h]

Return to the Register Map .

表 7-29. GEN_STATUS Register Field Descriptions

Bit	Field	Type	Reset	Description
15	ALARM_IRQ	R	0h	Alarm IRQ OR of all the unmasked bits in the ALARM_STATUS register. 0h = All of the unmasked bits of the ALARM_STATUS register are low 1h = At least one of the unmasked bits in the ALARM_STATUS register is high
14-13	RESERVED	R	0h	
12	OTP_BUSY	R	1h	OTP Busy Status = 1h at power up while the OTP is being loaded into the trim latches. 0h = OTP has completed loading into the device 1h = OTP is being loaded into the device
11	RBIST_MODE	R	0h	Enables RBIST to run. 0h = RBIST disabled; 1h = RBIST enabled
10	RBIST_DONE	R	0h	RBIST Completed. Maskable fault. Sticky, cleared by reading register, unless condition still persist. 0h = RBIST has not completed; 1h = RBIST has completed
9	RBIST_FAIL	R	0h	RBIST Failed. Maskable fault. Sticky, cleared by reading register, unless condition still persist. 0h = RBIST has passed; 1h = RBIST has failed
8	RESET	R	1h	Device Reset Occurred. Status only. Does not feed IRQ. Sticky, cleared by reading register, unless condition still persist. 0h = Device has not reset since last read of register 1h = Device has reset since last read of register
7	SR_BUSYn	R	1h	Slew Rate Not Busy. Maskable fault. 0h = DAC is slewing to the target code 1h = DAC_OUT has reached the DAC_DATA. If slew rate is disabled, then this signal produces a rising edge within 3 internal clock cycles. If slew rate is enabled, this signal creates an IRQ event when the DAC_OUT has reached the DAC_DATA. At this time, slew rate can be safely disabled. If slew rate is disabled prior to DAC_OUT = DAC_DATA then a jump of DAC_OUT occurs. This can cause an unwanted fast transition on VOUT.
6	ADC_EOC	R	0h	ADC End of Conversion (EOC). Maskable fault. Sticky, cleared by reading register, unless condition still persist. 0h = No EOC since last read of register; 1h = ADC end of conversion
5	ADC_BUSY	R	0h	ADC Busy. Status only. Does not feed IRQ. Active signal, set as long as condition is true. 0h = No ADC activity; 1h = ADC is actively converting
4	PVDD_HI	R	0h	PVDD High. Status only. Does not feed IRQ. Set as long as condition is true. 0h = PVDD < 2.7 V; 1h = PVDD ≥ 2.7 V
3	BREAK_ FRAME_ERR	R	0h	Incorrect Stop Bit During Break Character. Maskable fault. Applies to UARTIN. Sticky, cleared by reading register, unless condition still persist. 0h = No break frame error; 1h = Break frame error
2	BREAK_ PARITY_ERR	R	0h	Incorrect parity (ODD) bit during break character. Maskable fault. Applies to UARTIN. Sticky, cleared by reading register, unless condition still persist. 0h = No break parity error; 1h = Break parity error
1	UART_ FRAME_ERR	R	0h	Incorrect Stop Bit During UART Character. Maskable fault. Applies to UARTIN. Sticky, cleared by reading register, unless condition still persist. 0h = No UART frame error; 1h = UART frame error
0	UART_ PARITY_ERR	R	0h	Incorrect Parity (ODD) Bit During UART Character. Maskable fault. Applies to UARTIN. Sticky, cleared by reading register, unless condition still persist. 0h = No UART parity error; 1h = UART parity error

Copyright © 2024 Texas Instruments Incorporated

7.1.28 ADC_FLAGS Register (Offset = 23h) [Reset = 0000h]

Return to the Register Map .

The limits for Self Diagnostic (SD) Alarm ADC Thresholds are shown in 表 6-5.

表 7-30. ADC_FLAGS Register Field Descriptions

Bit	Field	Type	Reset	Description
15-9	RESERVED	R	0h	
8	SD4_FAIL	R	0h	SD4 (VOUT) Limit Fail
7	SD3_FAIL	R	0h	SD3 (ZTAT) Limit Fail
6	SD2_FAIL	R	0h	SD2 (VDD) Limit Fail
5	SD1_FAIL	R	0h	SD1 (PVDD) Limit Fail
4	SD0_FAIL	R	0h	SD0 (VREF) Limit Fail
3	TEMP_FAIL	R	0h	TEMP Limit Fail
2	AIN1_FAIL	R	0h	AIN1 Limit Fail
1	AIN0_FAIL	R	0h	AIN0 Limit Fail
0	RESERVED	R	0h	

7.1.29 ADC_AIN0 Register (Offset = 24h) [Reset = 0000h]

Return to the Register Map .

表 7-31. ADC_AIN0 Register Field Descriptions

Bit	Field	Type	Reset	Description
15-12	RESERVED	R	0h	
11-0	DATA	R	0h	Converted Value of Voltage on Pin AIN0

7.1.30 ADC_AIN1 Register (Offset = 25h) [Reset = 0000h]

Return to the Register Map .

表 7-32. ADC_AIN1 Register Field Descriptions

Bit	Field	Type	Reset	Description
15-12	RESERVED	R	0h	
11-0	DATA	R	0h	Converted Value of Voltage on Pin AIN1

7.1.31 ADC_TEMP Register (Offset = 26h) [Reset = 0000h]

Return to the Register Map .

表 7-33. ADC_TEMP Register Field Descriptions

Bit	Field	Type	Reset	Description
15-12	RESERVED	R	0h	
11-0	DATA	R	0h	Converted Value of Temperature

7.1.32 ADC_SD_MUX Register (Offset = 27h) [Reset = 0000h]

Return to the Register Map .

表 7-34. ADC_SD_MUX Register Field Descriptions

Bit	Field	Type	Reset	Description
15-12	RESERVED	R	0h	
11-0	DATA	R	0h	Converted Value of Voltage on Self-Diagnostic (SD) MUX Input

7.1.33 ADC_OFFSET Register (Offset = 28h) [Reset = 0000h]

Return to the Register Map .

表 7-35. ADC_OFFSET Register Field Descriptions

Bit	Field	Type	Reset	Description
15-12	RESERVED	R	0h	
11-0	DATA	R	0h	ADC Comparator Offset This value reports the offset measured in the device, and can be used to adjust each conversion value. If ADC_BYP.OFST_BYP_EN is set, then the value in ADC_BYP.DATA is used as the offset. This value is not affected by ADC_BYP.

7.1.34 DAC_OUT Register (Offset = 2Ch) [Reset = 0000h]

Return to the Register Map .

表 7-36. DAC_OUT Register Field Descriptions

Bit	Field	Type	Reset	Description
15-0	DATA	R	0h	DAC Code Applied to the Analog Circuit

Copyright © 2024 Texas Instruments Incorporated

7.1.35 ADC_OUT Register (Offset = 2Dh) [Reset = 0000h]

Return to the Register Map .

表 7-37. ADC_OUT Register Field Descriptions

Bit	Field	Type	Reset	Description
15-12	RESERVED	R	0h	
11-0	DATA	R	0h	ADC Data for Each Conversion Does not include ADC_OFFSET.DATA adjustment. Is not affected by ADC_BYP.DATA.

7.1.36 ADC_BYP Register (Offset = 2Eh) [Reset = 0000h]

Return to the Register Map .

ADC_BYP is shown in ADC_BYP Register Field Descriptions .

表 7-38. ADC_BYP Register Field Descriptions

Bit	Field	Type	Reset	Description
15	DATA_BYP_EN	R/W	0h	Data Bypass Enable Applies ADC_BYP.DATA to the ADC channel being converted. ADC_OFFSET is ignored. Do not set OFST_BYP_EN and DATA_BYP_EN at the same time. If OFST_BYP_EN is also set, DATA_BYP_EN takes priority over OFST_BYP_EN. After a channel is converted, the ADC_BYP.DATA value appears in the readback register for the converted channel and is used to calculate faults. 0h = Data bypass disabled (default) 1h = Data bypass enabled
14	OFST_BYP_EN	R/W	0h	Offset Bypass Enable Overrides the offset register with the ADC_BYP.DATA value. When using this bit, the ADC_BYP.DATA field is processed as 2's complement. Do not set OFST_BYP_EN and DATA_BYP_EN at the same time. 0h = Offset bypass disabled (default) 1h = Offset bypass enabled
13	DIS_GND_SAMP	R/W	0h	Disable GND Sampling This bit disables the sampling of GND during SAR activity. The sampling of GND is used to fully discharge the sampling CAP to reduce channel crosstalk. 0h = GND sampling enabled (default) 1h = GND sampling disabled
12	RESERVED	R	0h	
11-0	DATA	R/W	0h	Bypass Data

7.1.37 FORCE_FAIL Register (Offset = 2Fh) [Reset = 0000h]

Return to the Register Map .

Force failures for fault detection.

表 7-39. FORCE_FAIL Register Field Descriptions

Bit	Field	Type	Reset	Description
15	CRC_FLT	R/W	0h	Force CRC Failure on SDO by Inverting the CRC Byte 0h = No force failure of CRC (default) 1h = Force failure of CRC
14	VREF_FLT	R/W	0h	Force Reference Voltage Failure. Analog signal. 0h = No force failure of VREF (default) 1h = Force failure of VREF
13	THERM_ERR_FLT	R/W	0h	Force Temperature > 130°C Thermal Error. Analog signal. 0h = No force temperature > 130°C error (default) 1h = Force temperature > 130°C error
12	THERM_WARN_FLT	R/W	0h	Force Temperature > 85°C thermal Warning. Analog signal. 0h = No force temperature > 85°C warning (default) 1h = Force temperature > 85°C warning
11-10	RESERVED	R/W	0h	
9	SD4_HI_FLT	R/W	0h	SD4 (VOUT) High Limit Failure. ADC measurement. 0h = No force failure of SD4 (VOUT) (default) 1h = Force failure of SD4 (VOUT)
8	SD4_LO_FLT	R/W	0h	SD4 (VOUT) Low limit failure. ADC measurement. 0h = No force failure of SD4 (VOUT) (default) 1h = Force failure of SD4 (VOUT)
7	SD3_HI_FLT	R/W	0h	SD3 (ZTAT) High Limit Failure. ADC measurement. 0h = No force failure of SD3 (ZTAT) (default) 1h = Force failure of SD3 (ZTAT)
6	SD3_LO_FLT	R/W	0h	SD3 (ZTAT) Low Limit Failure. ADC measurement. 0h = No force failure of SD3 (ZTAT) (default) 1h = Force failure of SD3 (ZTAT)
5	SD2_HI_FLT	R/W	0h	SD2 (VDD) High Limit Failure. ADC measurement. 0h = No force failure of SD2 (VDD) (default) 1h = Force failure of SD2 (VDD)
4	SD2_LO_FLT	R/W	0h	SD2 (VDD) Low Limit Failure. ADC measurement. 0h = No force failure of SD2 (VDD) (default) 1h = Force failure of SD2 (VDD)
3	SD1_HI_FLT	R/W	0h	SD1 (PVDD) High Limit Failure. ADC measurement. 0h = No force failure of SD1 (PVDD) (default) 1h = Force failure of SD1 (PVDD)
2	SD1_LO_FLT	R/W	0h	SD1 (PVDD) Low Limit Failure. ADC measurement. 0h = No force failure of SD1 (PVDD) (default) 1h = Force failure of SD1 (PVDD)
1	SD0_HI_FLT	R/W	0h	SD0 (VREF) High Limit Failure. ADC measurement. 0h = No force failure of SD0 (VREF) (default) 1h = Force failure of SD0 (VREF)
0	SD0_LO_FLT	R/W	0h	SD0 (VREF) Low Limit Failure. ADC measurement. 0h = No force failure of SD0 (VREF) (default) 1h = Force failure of SD0 (VREF)

Copyright © 2024 Texas Instruments Incorporated

7.1.38 TIMER_CFG_0 Register (Offset = 3Bh) [Reset = 0000h]

Return to the Register Map .

TIMER Configuration 0.

表 7-40. TIMER CONFIG 0 Register Field Descriptions

Bit	Field	Type	Reset	Description
15-4	RESERVED	TO	0h	
3-2	CLK_SEL	R/W	0h	Clock Select Selects the timer clock frequency. 0h = None (default) 1h = 1.2288 MHz 2h = 1.200 kHz 3h = 1.171 Hz
1	INVERT	R/W	0h	Invert Output Invert the Timer output. By default, the output is set to 1 when the counter is ≥ SET_TIME (3Dh).
0	ENABLE	R/W	0h	Timer Enable The CLK_OUT pin must also be configured to output the Timer.

7.1.39 TIMER_CFG_1 Register (Offset = 3Ch) [Reset = 0000h]

Return to the Register Map .

TIMER Configuration 1.

表 7-41. TIMER CONFIG 1 Register Field Descriptions

Bit	Field	Type	Reset	Description
15-0	PERIOD	R/W	0h	This field defines the period of the timer. The period is the product of (PERIOD + 1) and the clock period of CLK_SEL. For example, CLK_SEL = 2h (1200 Hz), The period is (PERIOD + 1) × 853 ms.

7.1.40 TIMER_CFG_2 Register (Offset = 3Dh) [Reset = 0000h]

Return to the Register Map .

TIMER Configuration 2.

表 7-42. TIMER CONFIG 2 Register Field Descriptions

Bit	Field	Type	Reset	Description
15-0	SET_TIME	R/W	0h	The SET_TIME determine when the output of the timer goes high. The bits define the duty cycle of the timer (PERIOD – SET_TIME). The timer starts out as 0 and transitions to 1 when the SET_TIME is met. The polarity of the timer can be inverted using the TIMER_CFG_0.INVERT bit.

7.1.41 CRC_RD Register (Offset = 3Eh) [Reset = 0000h]

Return to the Register Map .

CRC read.

表 7-43. CRC Read Register Field Descriptions

Bit	Field	Type	Reset	Description
15-0	CRC	R/O	0h	Calculated CRC for RBIST or SHADOWLOAD. Final value is calculated internally. This value changes while RBIST or shadow load are running.

7.1.42 RBIST_CRC Register (Offset = 3Fh) [Reset = 0000h]

Return to the Register Map .

RBIST CRC.

表 7-44. RBIST CRC Register Field Descriptions

Bit	Field	Type	Reset	Description
15-0	RBIST CRC	R/W	0h	Calculated CRC for Register RBIST

Copyright © 2024 Texas Instruments Incorporated

8 Application and Implementation

注

以下のアプリケーション情報は、TI の製品仕様に含まれるものではなく、TI ではその正確性または完全性を保証いたしません。個々の目的に対する製品の適合性については、お客様の責任で判断していただくことになります。お客様は自身の設計実装を検証しテストすることで、システムの機能を確認する必要があります。

8.1 Application Information

The AFEx8201 are extremely low-power 16-bit and 14-bit voltage output DACs. The DACs support an output range of 0 V to 2.5 V. These devices have an onboard oscillator and an optional precision internal reference. This DAC is designed for analog voltage or current output modules. These devices also feature a SAR ADC that is used to measure internal and external nodes for making diagnostic measurements with fault detection and alarm actions. Use these diagnostic measurements together with the CRC and watchdog timer monitoring for device and system monitoring for functional safety.

The PVDD power supply has an operating range of 2.7 V to 5.5 V. The VDD is powered from an onboard LDO. Run the digital interface supply, IOVDD, from 1.71 V to 5.5 V.

8.1.1 Multichannel Configuration

Because $\overline{CS}$ low is required for communication and SDO can be set to a tri-state condition, only individual $\overline{CS}$ signals are required from the microcontroller for all the AFEx8201 devices in the system. The SDI, SDO, and SCLK signals can be combined. All the individual $\overline{ALARM}$ pins can be wired-OR together. This minimizes the number of microcontroller GPIO signals required for communication, as well as the number of isolation channels for isolated systems. The multichannel configuration block diagram is shown in 図 8-1.

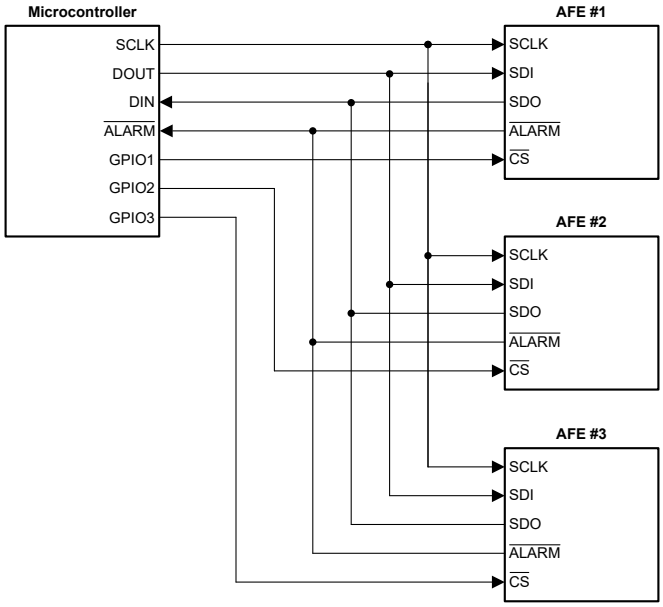

図 8-1. Multichannel Configuration

8.2 Typical Application

8.2.1 Analog Output Module

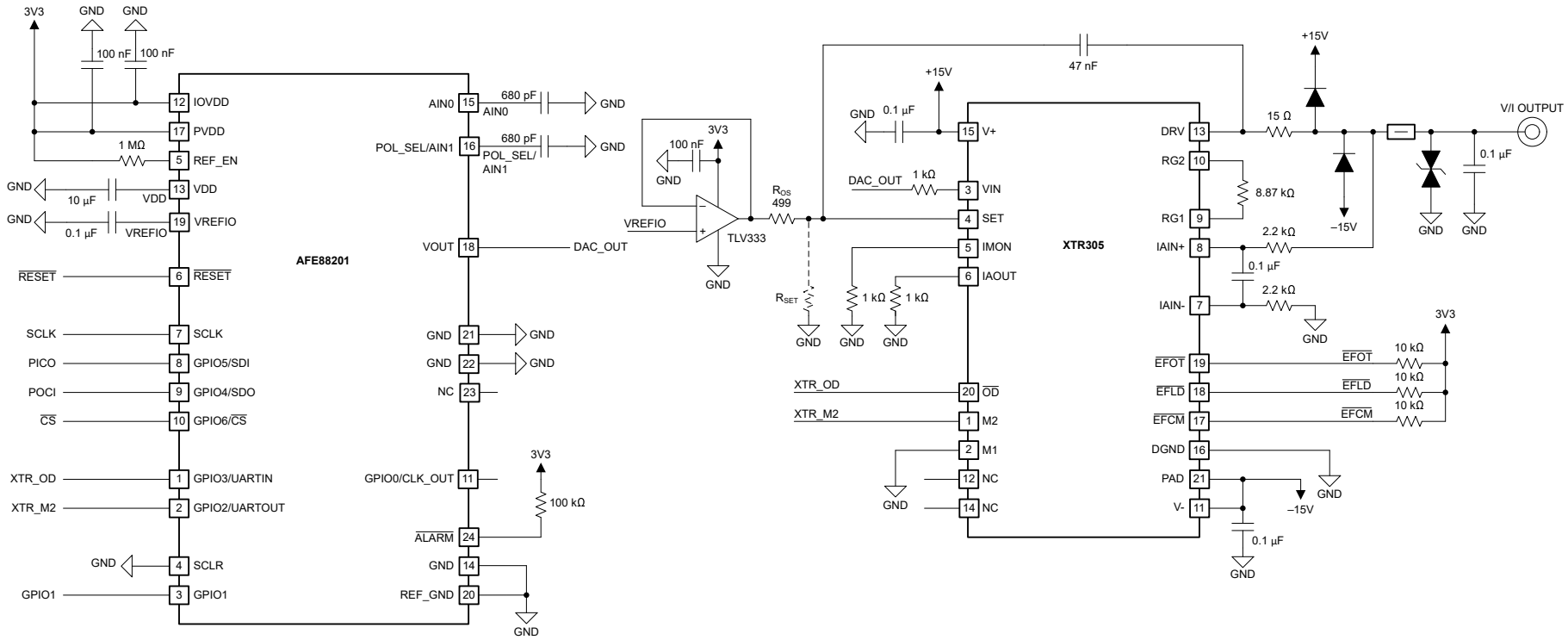

図 8-2. AFE88201 With an XTR305 in an Analog Output Module

This design example shows the construction of an analog output module capable of current and voltage outputs for a programmable logic controller (PLC). This example combines several circuit elements to create a subsystem that can support most analog output applications. This application requires supplies of 3.3 V and ±15 V. The circuit output sets a precision voltage or current with an accuracy of less than 0.1% full scale range (FSR) of total error at room temperature after calibration. The high integration in the system allows for a compact circuit, making this device an excellent choice for analog outputs for ac inverters and servo drives where space is a concern. Error flags and output load monitoring capability enable a robust design. 図 8-2 shows the schematic diagram for the analog output module.

Copyright © 2024 Texas Instruments Incorporated

8.2.1.1 Design Requirements

The design requirements are:

- Bipolar analog output voltage range: ±11 V
- Bipolar analog output current range: –25 mA to 25 mA
- Operation with standard industrial automation supply voltages from 3.3 V and ±15 V
- Current and voltage outputs with TUE less than 0.5% at 25°C after calibration

8.2.1.2 Detailed Design Procedure

図 8-3 shows a block diagram of an analog output module using the AFEx8201 and the XTR305.

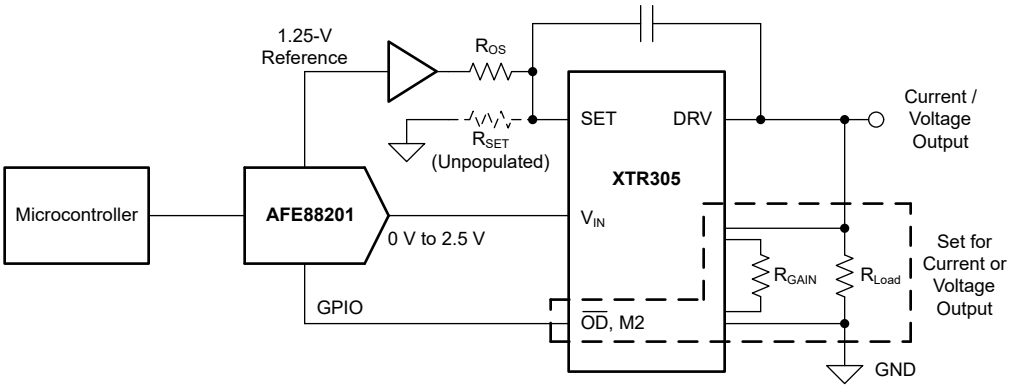

図 8-3. Block Diagram of the Analog Output Module Using the AFEx8201 and XTR305

The AFE88201 sets an output voltage from 0 V to 2.5 V using a 16-bit code. Use the AFE78201 in this same application if 14-bit performance is required. This DAC voltage is converted to an output voltage or an output current by the XTR305. The XTR305 provides two basic functional blocks: an instrumentation amplifier (IA) and an operational amplifier (OPA) for an output driver.

This application is a configurable current or voltage analog output. 図 8-2 shows a schematic of the circuit. The AFE88201 DAC controls the XTR305, which is an industrial analog current or voltage output driver. The XTR305 takes an analog input control signal and drives a proportional analog output. The output is configured as a current output if M2 is high and M1 is low, and a voltage output if M2 and M1 are both low.

The input-to-output gain of the XTR305 is set by R_{SET} and R_{GAIN}. The gain components in this design are selected for ±11-V or 0-mA to 25-mA output.

During current-output mode, a precision current mirror generates an exact 1/10th copy of the output current, and this current is routed to the summing junction of the OPA to close the feedback loop. In voltage-output mode, the IA senses the output voltage and feeds back a current equal to $2 \times V_{OUT} / R_{GAIN}$ to the summing junction of the OPA to close the feedback loop.

A basic design procedure using the XTR305 as an output stage is described in the following list.

- Leave R_{SET} open for bipolar output
- Select R_{OS} for current-output transfer function
- Select R_{GAIN} for the voltage-output transfer function
- Select EMC protection components

8.2.1.2.1 XTR305

The XTR305 is a complete output driver for cost-sensitive industrial and process-control applications. Use the M2 pin to configure the application for current or voltage output, No external shunt resistor is required. Only external gain-setting resistors and a loop-compensation capacitor are required.

The separate driver and receiver channels provide flexibility. The instrumentation amplifier can be used for remote voltage sensing or as a high-voltage, high-impedance measurement channel. In voltage-output mode, a copy of the output current is provided, allowing calculation of load resistance. The digital-output selection capability, error flags, and monitor pins make remote configuration and troubleshooting possible. Fault conditions on the output and on the IA input, as well as overtemperature conditions, are indicated by error flags. The monitoring pins provide continuous feedback about load power or impedance.

8.2.1.2.1.1 Current-Output Mode

In the current-output mode, a 0-V to 2.5-V control input is converted to a ±25-mA current output. As the input is unipolar, and the output is bipolar, a reference bias voltage (VREF) is required on the input stage of the XTR305. The bias voltage of 1.25 V is taken from a buffered VREFIO output from the AFE88201. 図 8-4 shows the configuration of the XTR305 in current-output mode.

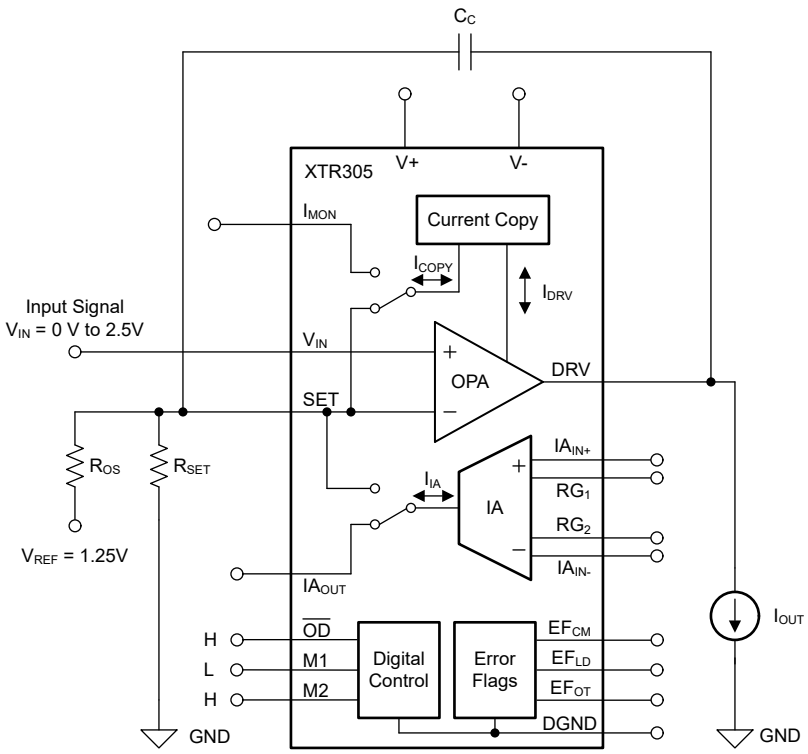

図 8-4. The XTR305 Standard Circuit for Current Output

For current-output mode, $\overline{OD}$ is set high, M1 is set low, and M2 is set high. The normal transfer function for this circuit is given in 式 10.

$$I_{OUT} = 10 \times \left(\frac{V_{IN}}{R_{SET}} + \frac{V_{IN} - V_{REF}}{R_{OS}} \right) \tag{10}$$

However, with the R_{SET} resistor as an open circuit, the singular V_{IN} term drops out. Using 式 10, the R_{OS} term sets the output. The transconductance gain is set by R_{OS} according to 式 11.

$$R_{OS} = \frac{10}{I_{outFSR}} \times V_{inFSR} = \frac{10}{50\ mA} \times 2.5\ V = 500\ \Omega \tag{11}$$

Copyright © 2024 Texas Instruments Incorporated

Select R_{OS} = 499 Ω as a standard resistor value. This gives an I_{outFSR} of 50.1 mA, with an output range of ±25.05 mA. The transfer function is given by 式 12.

$$I_{OUT} = \frac{10}{R_{OS}} \times (V_{in} - V_{REF}) \tag{12}$$

Using the AFE88201, the transfer function from code to output current is shown in 式 13.

$$I_{OUT} = \frac{10}{R_{OS}} \times \left(\frac{DAC_CODE \times 2.5\,V}{2^{16}} - 1.25V\right) \tag{13}$$

When using the current-output mode, the output load voltage can be monitored through an analog output monitor in the XTR305. See also セクション 8.2.1.2.1.3.

8.2.1.2.1.2 Voltage Output Mode

For voltage-output mode, the 0-V to 2.5-V control input is translated to a ±11-V voltage output. Similar to current-output mode, a unipolar input is used to create a bipolar output. 図 8-5 shows the configuration of the XTR305 in voltage-output mode.

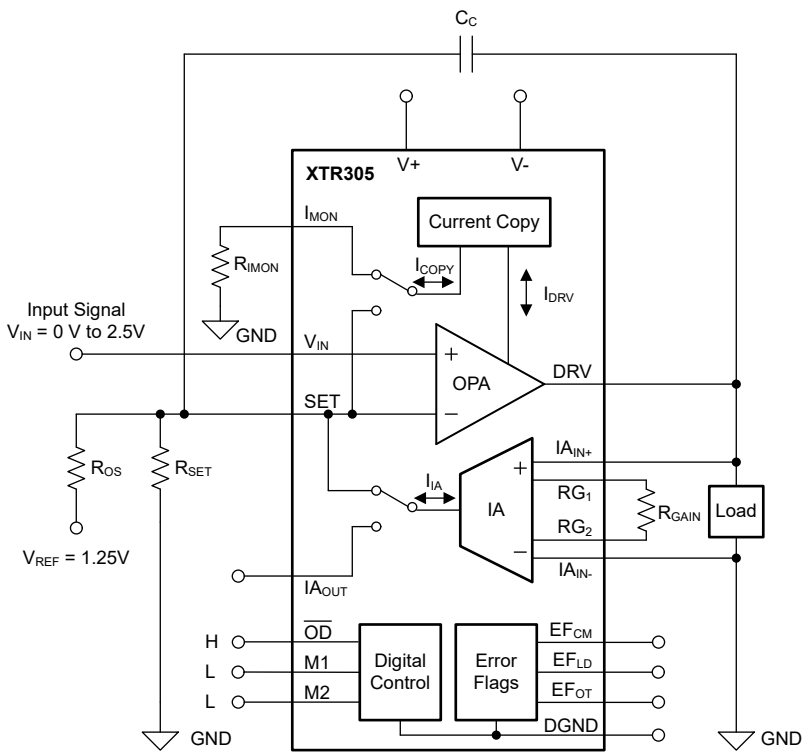

図 8-5. The XTR305 Standard Circuit for Voltage Output

For voltage-output mode, $\overline{OD}$ is set high, while M1 and M2 are set low. The normal transfer function for this circuit is given in 式 14.

$$V_{OUT} = \frac{R_{GAIN}}{2} \times \left(\frac{V_{IN}}{R_{SET}} + \frac{V_{IN} - V_{REF}}{R_{OS}}\right) \tag{14}$$

Again, with R_{SET} as an open circuit, the singular V_{IN} term drops out. The gain is set by R_{OS} and R_{GAIN} as per 式 15.

$$R_{GAIN} = \frac{2 \times V_{outFSR} \times R_{OS}}{V_{inFSR}} = \frac{2 \times 22 \times 499}{2.5} = 8782\ \Omega \tag{15}$$

Select R_{GAIN} = 8870 Ω, which gives a V_{outFSR} of 22.22 V, with an output range of ±11.11 V The transfer function is given by 式 16.

$$V_{OUT} = \frac{R_{GAIN}}{2} \times \left(\frac{V_{IN} - V_{REF}}{R_{OS}}\right) \tag{16}$$

Using the AFE88201, the transfer function from code to output voltage is shown in 式 17.

$$V_{OUT} = \frac{R_{GAIN}}{2 \times R_{OS}} \times \left(\frac{DAC_CODE \times 2.5\ V}{2^{16}} - 1.25V\right) \tag{17}$$

When using the voltage-output mode, the output load current can be monitored through an analog output monitor in the XTR305. See also セクション 8.2.1.2.1.3.

8.2.1.2.1.3 Diagnostic Features

In addition to the diagnostic ADC and alarms of the AFEx8201 described in セクション 6.3.2 and セクション 6.3.3.6, the XTR305 has several additional diagnostic features.

IA Common-Mode Overvoltage Range (EF_{CM}): This flag goes low as soon as the input of the IA reach the limits of the linear operation for the input voltage.

Overtemperature Flag (EF_{OT}): This flag goes low if the chip temperature reaches 140°C and resets as soon as the temperature cools down to less than 125°C.

Load Error (EF_{LD}): Indicates fault conditions driving voltage or current into the load. In voltage-output mode, the device monitors the voltage limits of the output swing and the current limit condition caused from short or low load resistance. In current-output mode, the alarm indicates a saturation into the supply rails from a high-load resistance or open load. The fault flag helps detect whether the analog output wire is broken or shorted. This feature improves the reliability of the analog output function. In case of a short-circuited load, the output current is limited to ±20 mA in voltage-output mode, and ±32 mA in the current-output mode.

All three fault flags are open collector, and therefore require pullup resistors.

Analog Output Monitor: In current-output mode, the IA output is connected to a resistor through the IAOUT pin and the IMON pin is internally disconnected. IAOUT is proportional to the output voltage given by 式 18. This current is converted into voltage across a 500-Ω resistor that can be sensed by the ADC on the AFEx8201. This current measurement enables a monitor of the output power delivered to the load. If the load resistance is known, then the output current can be calculated and compared with the commanded value.

$$IA_{OUT} = \frac{2 \times V_{OUT}}{R_{GAIN}} \tag{18}$$

During voltage-output mode, 1/10th of the output drive current is mirrored onto the IMON pin and IAOUT is internally disconnected. The IMON pin is connected to a 1-kΩ resistor. The voltage across this resistor is sensed by the ADC on the AFE88201. If the output load is known, then the output voltage can be calculated and compared with the commanded value. The output power delivered to the load can also be calculated. Output monitor functions help detect load changes enabling predictive maintenance, which increase reliability of the analog output function.

Copyright © 2024 Texas Instruments Incorporated

8.2.1.3 Application Curves

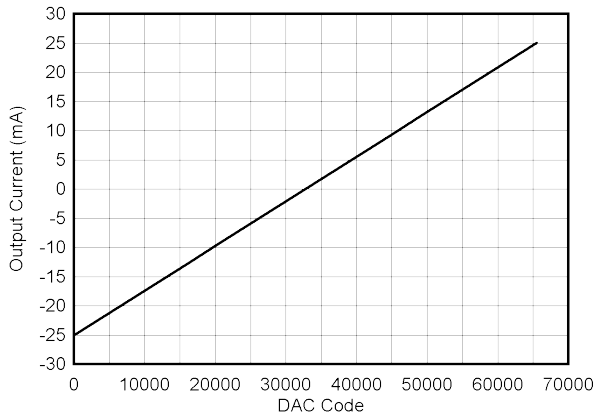

図 8-6. DAC Code to XTR Output Current

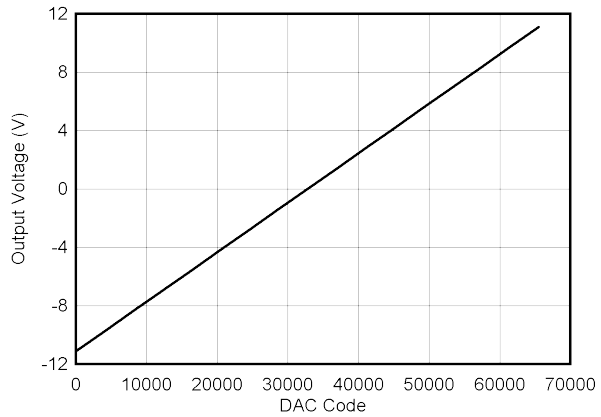

図 8-7. DAC Code to XTR Output Voltage

8.3 Initialization Setup

This section describes several recommendations to set up the AFEx8201.

The AFEx8201 power up with the CRC enabled. If the device is intended to be run without the CRC, the CRC must be disabled by setting the CRC_EN bit to 0h in the CONFIG register. Be aware that the command to write to this register is first done with the CRC enabled. The CRC byte must be appended to the command for the device to interpret the command correctly. To disable the CRC after start up, write 0x02 0x00 0x26 0x24 to the device. The first three bytes write the command, while the last byte is the CRC byte. For more information on the CRC, see the communication description in セクション 6.5.3.3.

The AFEx8201 also power up with the SDO pin disabled. The SDO pin is required for reading from any of the device registers, as well as reading any data from the ADC in SPI mode. The SDO pin is enabled by writing 0h into the DSDO bit in the CONFIG register. See also セクション 6.5.3.1 and セクション 6.5.3.2.

To enable the ADC, first enable the ADC buffer by writing 0h into the BUF_PD bit in the ADC_CFG register. For information about using the ADC in different modes of operation, see セクション 6.3.2.

8.4 Power Supply Recommendations

The AFEx8201 can operate within a single-supply range of 2.7 V to 5.5 V applied to the PVDD pin. When 2.7 V to 5.5 V is provided to PVDD, an internal LDO is enabled that drives VDD internally. VDD pin must have 1 µF to 10 µF of capacitance for operation.

The digital interface supply, IOVDD, can operate with a supply range of 1.71 V to 5.5 V.

Switching power supplies and DC/DC converters often have high-frequency glitches or spikes riding on the output voltage. In addition, digital components can create similar high-frequency spikes. This noise can easily couple into the DAC output voltage or current through various paths between the power connections and analog output. To further reduce noise, include bulk and local decoupling capacitors. The current consumption on the PVDD and IOVDD pins, the short-circuit current limit for the voltage output, and the current ranges for the current output are listed in the *Electrical Characteristics* . The power supply must meet the requirements listed in the *Recommended Operating Conditions* .

Copyright © 2024 Texas Instruments Incorporated

8.5 Layout

8.5.1 Layout Guidelines

To maximize the performance of the AFEx8201 in any application, follow good layout practices and proper circuit design. The following recommendations are specific to the device:

- For best performance, dedicate an entire PCB layer to a ground plane and do not route any other signal traces on this layer. However, depending on restrictions imposed by specific end equipment, a dedicated ground plane is not always practical. If ground-plane separation is necessary, make a direct connection of the planes at the DAC. Do not connect individual ground planes at multiple locations because this configuration creates ground loops.
- IOVDD and PVDD must have 100-nF decoupling capacitors local to the respective pins. VDD must have at least a 1-µF decoupling capacitor used for the internal LDO. Use a high-quality ceramic-type NP0 or X7R capacitor for best performance across temperature and a very low dissipation factor.
- Place a 100-nF reference capacitor close to the VREFIO pin.
- Avoid routing switching signals near the reference input.
- Maintain proper placement for the digital and analog sections with respect to the digital and analog components. Separate the analog and digital circuitry for less coupling into neighboring blocks and to minimize the interaction between analog and digital return currents.
- For designs that include protection circuits:
  - Place diversion elements, such as TVS diodes or capacitors, close to off-board connectors to make sure that return current from high-energy transients does not cause damage to sensitive devices
  - Use large, wide traces to provide a low-impedance path to divert high-energy transients away from the I/O pins.

8.5.2 Layout Example

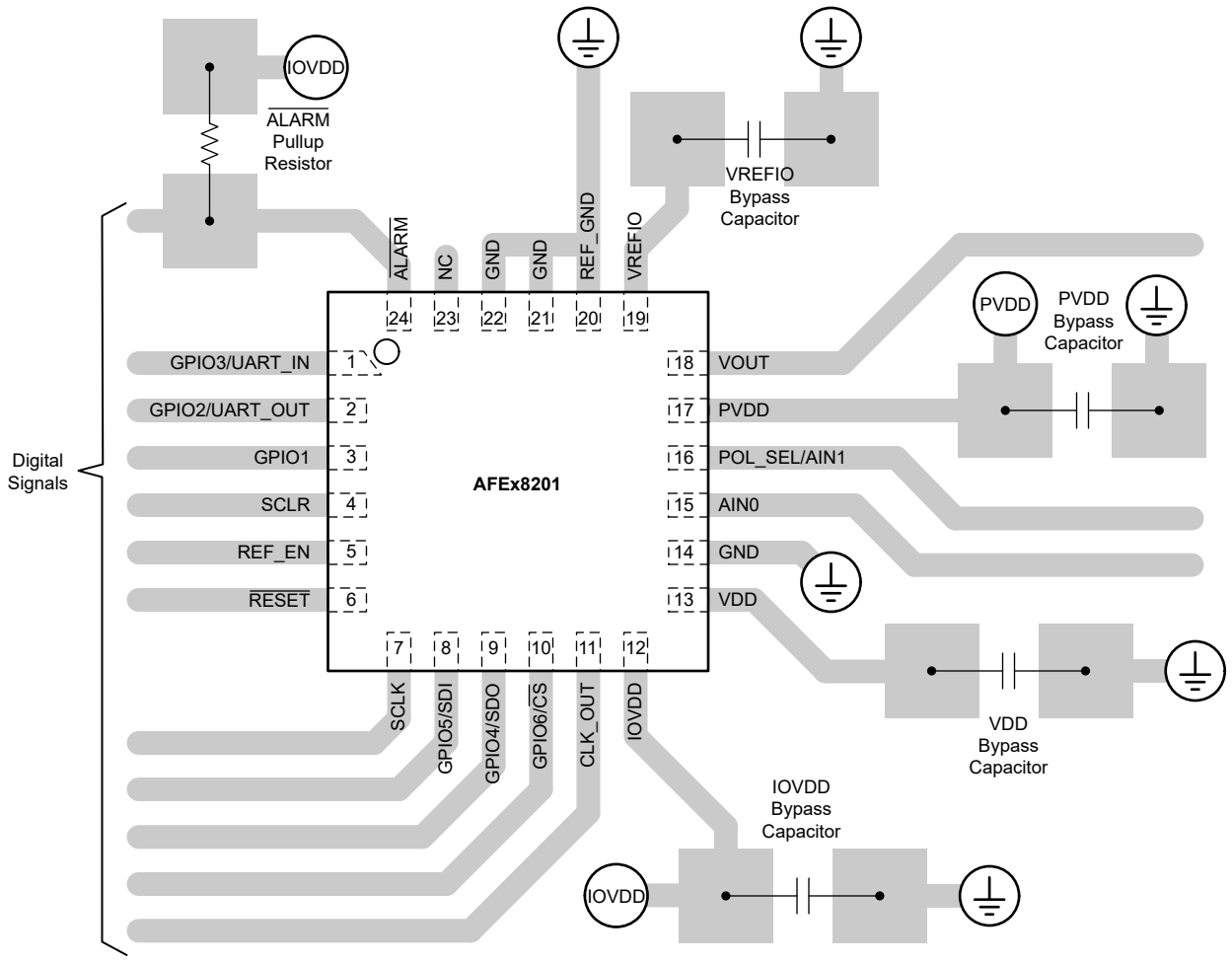

All pins with GPIO should have an external pullup or pulldown resistor (not shown)

図 8-8. Layout Example

Copyright © 2024 Texas Instruments Incorporated

9 Device and Documentation Support

9.1 Documentation Support

9.1.1 Related Documentation

For related documentation see the following:

- Texas Instruments, AFE882H1 Evaluation Module User's Guide
- Texas Instruments, REF35 Ultra Low-Power, High-Precision Voltage Reference data sheet
- Texas Instruments, XTR305 Industrial Analog Current or Voltage Output Driver data sheet
- Texas Instruments, ADS1220 4-Channel, 2-kSPS, Low-Power, 24-Bit ADC with Integrated PGA and Reference data sheet
- Texas Instruments, TPS7A16 60-V, 5-µA IQ, 100-mA, Low-Dropout Voltage Regulator With Enable and Power-Good data sheet
- Texas Instruments, TPS7A02 Nanopower IQ, 25-nA, 200-mA, Low-Dropout Voltage Regulator With Fast Transient Response data sheet
- Texas Instruments, ISO7021 Ultra-Low Power Two-Channel Digital Isolator data sheet
- Texas Instruments, Isolated, Ultra-Low Power Design for 4- to 20-mA Loop Powered Transmitters design guide
- Texas Instruments, Isolated Loop Powered Thermocouple Transmitter design guide
- Texas Instruments, Small Form Factor, 2-Wire, 4- to 20-mA Current-Loop, RTD Temperature Transmitter design guide
- Texas Instruments, Isolated Power and Data Interface for Low-power Applications reference design
- Texas Instruments, Uniquely Efficient Isolated DC/DC Converter for Ultra-Low Power and Low-Power Applications design guide

9.2 ドキュメントの更新通知を受け取る方法

ドキュメントの更新についての通知を受け取るには、www.tij.co.jp のデバイス製品フォルダを開いてください。[通知] をクリックして登録すると、変更されたすべての製品情報に関するダイジェストを毎週受け取ることができます。 変更の詳細については、改訂されたドキュメントに含まれている改訂履歴をご覧ください。

9.3 サポート・リソース

テキサス・インスツルメンツ E2E™ サポート・フォーラムは、エンジニアが検証済みの回答と設計に関するヒントをエキスパートから迅速かつ直接得ることができる場所です。既存の回答を検索したり、独自の質問をしたりすることで、設計で必要な支援を迅速に得ることができます。

リンクされているコンテンツは、各寄稿者により「現状のまま」提供されるものです。これらはテキサス・インスツルメンツの仕様を構成するものではなく、必ずしもテキサス・インスツルメンツの見解を反映したものではありません。テキサス・インスツルメンツの使用条件を参照してください。

9.4 Trademarks

テキサス・インスツルメンツ E2E™ is a trademark of Texas Instruments.
すべての商標は、それぞれの所有者に帰属します。

9.5 静電気放電に関する注意事項

この IC は、ESD によって破損する可能性があります。テキサス・インスツルメンツは、IC を取り扱う際には常に適切な注意を払うことを推奨します。正しい取り扱いおよび設置手順に従わない場合、デバイスを破損するおそれがあります。

ESD による破損は、わずかな性能低下からデバイスの完全な故障まで多岐にわたります。精密な IC の場合、パラメータがわずかに変化するだけで公表されている仕様から外れる可能性があるため、破損が発生しやすくなっています。

9.6 用語集

テキサス・インスツルメンツ用語集　　この用語集には、用語や略語の一覧および定義が記載されています。

10 Revision History

資料番号末尾の英字は改訂を表しています。その改訂履歴は英語版に準じています。

Changes from Revision * (May 2023) to Revision A (June 2024)	Page
• Updated GPIO pin descriptions for clarity	3
• Updated reset values in Table 6-7, *List of Registers Covered by RBIST*	41

11 Mechanical, Packaging, and Orderable Information

The following pages include mechanical, packaging, and orderable information. This information is the most current data available for the designated devices. This data is subject to change without notice and revision of this document. For browser-based versions of this data sheet, refer to the left-hand navigation.

Copyright © 2024 Texas Instruments Incorporated

重要なお知らせと免責事項

テキサス・インスツルメンツは、技術データと信頼性データ (データシートを含みます)、設計リソース (リファレンス デザインを含みます)、アプリケーションや設計に関する各種アドバイス、Web ツール、安全性情報、その他のリソースを、欠陥が存在する可能性のある「現状のまま」提供しており、商品性および特定目的に対する適合性の黙示保証、第三者の知的財産権の非侵害保証を含むいかなる保証も、明示的または黙示的にかかわらず拒否します。

これらのリソースは、テキサス・インスツルメンツ製品を使用する設計の経験を積んだ開発者への提供を意図したものです。(1) お客様のアプリケーションに適した テキサス・インスツルメンツ製品の選定、(2) お客様のアプリケーションの設計、検証、試験、(3) お客様のアプリケーションに該当する各種規格や、その他のあらゆる安全性、セキュリティ、規制、または他の要件への確実な適合に関する責任を、お客様のみが単独で負うものとします。

上記の各種リソースは、予告なく変更される可能性があります。これらのリソースは、リソースで説明されている テキサス・インスツルメンツ製品を使用するアプリケーションの開発の目的でのみ、テキサス・インスツルメンツはその使用をお客様に許諾します。これらのリソースに関して、他の目的で複製することや掲載することは禁止されています。テキサス・インスツルメンツや第三者の知的財産権のライセンスが付与されている訳ではありません。お客様は、これらのリソースを自身で使用した結果発生するあらゆる申し立て、損害、費用、損失、責任について、テキサス・インスツルメンツおよびその代理人を完全に補償するものとし、テキサス・インスツルメンツは一切の責任を拒否します。

テキサス・インスツルメンツの製品は、テキサス・インスツルメンツの販売条件、または ti.com やかかる テキサス・インスツルメンツ製品の関連資料などのいずれかを通じて提供する適用可能な条項の下で提供されています。テキサス・インスツルメンツがこれらのリソースを提供することは、適用される テキサス・インスツルメンツの保証または他の保証の放棄の拡大や変更を意味するものではありません。

お客様がいかなる追加条項または代替条項を提案した場合でも、テキサス・インスツルメンツはそれらに異議を唱え、拒否します。

郵送先住所：Texas Instruments, Post Office Box 655303, Dallas, Texas 75265
Copyright © 2024, Texas Instruments Incorporated

PACKAGING INFORMATION

Orderable part number	Status (1)	Material type (2)	Package | Pins	Package qty | Carrier	RoHS (3)	Lead finish/ Ball material (4)	MSL rating/ Peak reflow (5)	Op temp (°C)	Part marking (6)
AFE78201RRUR	Active	Production	UQFN (RRU) | 24	3000 | LARGE T&R	Yes	NIPDAU	Level-2-260C-1 YEAR	-55 to 125	AFE 78201
AFE78201RRUR.A	Active	Production	UQFN (RRU) | 24	3000 | LARGE T&R	Yes	NIPDAU	Level-2-260C-1 YEAR	-55 to 125	AFE 78201
AFE78201RRUT	Active	Production	UQFN (RRU) | 24	250 | SMALL T&R	Yes	NIPDAU	Level-2-260C-1 YEAR	-55 to 125	AFE 78201
AFE78201RRUT.A	Active	Production	UQFN (RRU) | 24	250 | SMALL T&R	Yes	NIPDAU	Level-2-260C-1 YEAR	-55 to 125	AFE 78201
AFE88201RRUR	Active	Production	UQFN (RRU) | 24	3000 | LARGE T&R	Yes	NIPDAU	Level-2-260C-1 YEAR	-55 to 125	AFE 88201
AFE88201RRUR.A	Active	Production	UQFN (RRU) | 24	3000 | LARGE T&R	Yes	NIPDAU	Level-2-260C-1 YEAR	-55 to 125	AFE 88201
AFE88201RRUT	Active	Production	UQFN (RRU) | 24	250 | SMALL T&R	Yes	NIPDAU	Level-2-260C-1 YEAR	-55 to 125	AFE 88201
AFE88201RRUT.A	Active	Production	UQFN (RRU) | 24	250 | SMALL T&R	Yes	NIPDAU	Level-2-260C-1 YEAR	-55 to 125	AFE 88201

(1) **Status:** For more details on status, see our product life cycle.

(2) **Material type:** When designated, preproduction parts are prototypes/experimental devices, and are not yet approved or released for full production. Testing and final process, including without limitation quality assurance, reliability performance testing, and/or process qualification, may not yet be complete, and this item is subject to further changes or possible discontinuation. If available for ordering, purchases will be subject to an additional waiver at checkout, and are intended for early internal evaluation purposes only. These items are sold without warranties of any kind.

(3) **RoHS values:** Yes, No, RoHS Exempt. See the TI RoHS Statement for additional information and value definition.

(4) **Lead finish/Ball material:** Parts may have multiple material finish options. Finish options are separated by a vertical ruled line. Lead finish/Ball material values may wrap to two lines if the finish value exceeds the maximum column width.

(5) **MSL rating/Peak reflow:** The moisture sensitivity level ratings and peak solder (reflow) temperatures. In the event that a part has multiple moisture sensitivity ratings, only the lowest level per JEDEC standards is shown. Refer to the shipping label for the actual reflow temperature that will be used to mount the part to the printed circuit board.

(6) **Part marking:** There may be an additional marking, which relates to the logo, the lot trace code information, or the environmental category of the part.

Multiple part markings will be inside parentheses. Only one part marking contained in parentheses and separated by a "~" will appear on a part. If a line is indented then it is a continuation of the previous line and the two combined represent the entire part marking for that device.

Important Information and Disclaimer: The information provided on this page represents TI's knowledge and belief as of the date that it is provided. TI bases its knowledge and belief on information provided by third parties, and makes no representation or warranty as to the accuracy of such information. Efforts are underway to better integrate information from third parties. TI has taken and continues to take reasonable steps to provide representative and accurate information but may not have conducted destructive testing or chemical analysis on incoming materials and chemicals. TI and TI suppliers consider certain information to be proprietary, and thus CAS numbers and other limited information may not be available for release.

In no event shall TI's liability arising out of such information exceed the total purchase price of the TI part(s) at issue in this document sold by TI to Customer on an annual basis.

TAPE AND REEL INFORMATION

REEL DIMENSIONS

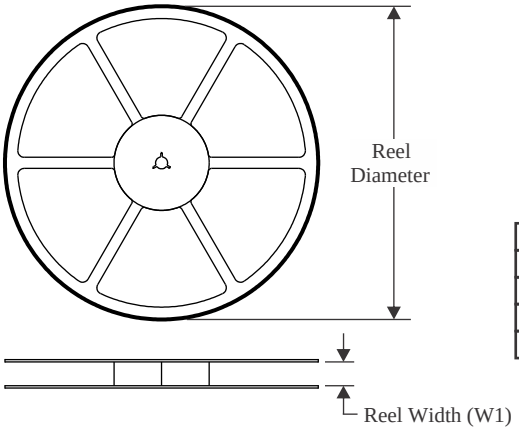

TAPE DIMENSIONS

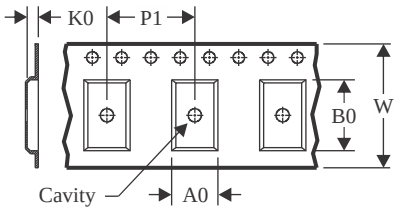

A0	Dimension designed to accommodate the component width
B0	Dimension designed to accommodate the component length
K0	Dimension designed to accommodate the component thickness
W	Overall width of the carrier tape
P1	Pitch between successive cavity centers

QUADRANT ASSIGNMENTS FOR PIN 1 ORIENTATION IN TAPE

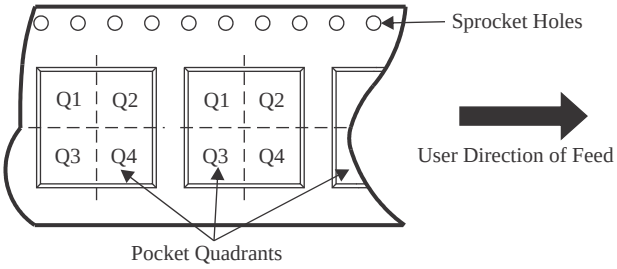

*All dimensions are nominal

Device	Package Type	Package Drawing	Pins	SPQ	Reel Diameter (mm)	Reel Width W1 (mm)	A0 (mm)	B0 (mm)	K0 (mm)	P1 (mm)	W (mm)	Pin1 Quadrant
AFE78201RRUR	UQFN	RRU	24	3000	330.0	12.4	4.25	4.25	0.8	8.0	12.0	Q2
AFE78201RRUT	UQFN	RRU	24	250	180.0	12.4	4.25	4.25	0.8	8.0	12.0	Q2
AFE88201RRUR	UQFN	RRU	24	3000	330.0	12.4	4.25	4.25	0.8	8.0	12.0	Q2
AFE88201RRUT	UQFN	RRU	24	250	180.0	12.4	4.25	4.25	0.8	8.0	12.0	Q2

TAPE AND REEL BOX DIMENSIONS

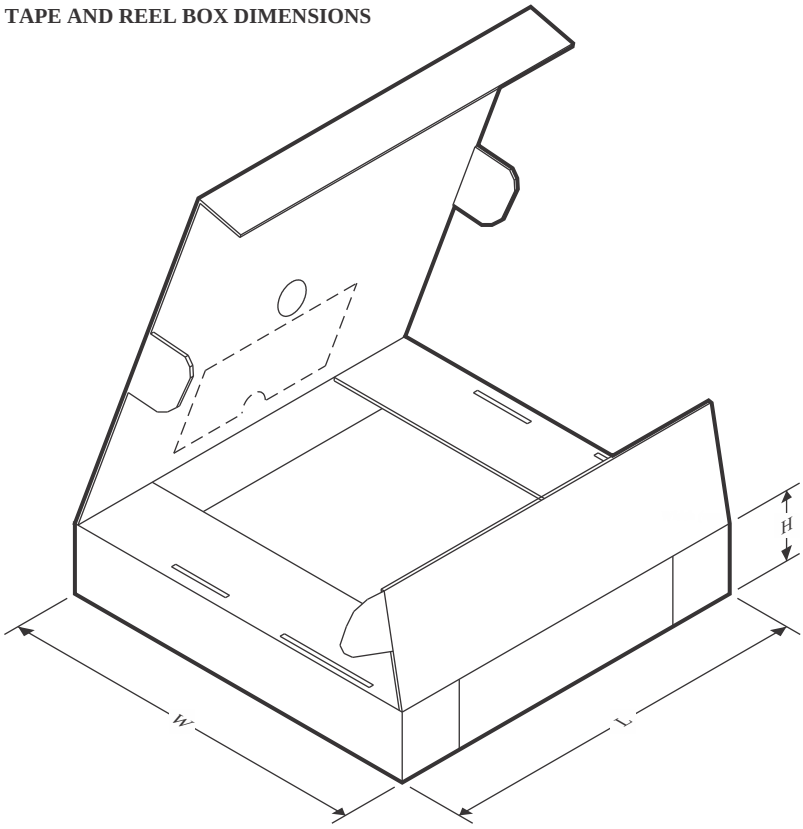

*All dimensions are nominal

Device	Package Type	Package Drawing	Pins	SPQ	Length (mm)	Width (mm)	Height (mm)
AFE78201RRUR	UQFN	RRU	24	3000	360.0	360.0	36.0
AFE78201RRUT	UQFN	RRU	24	250	210.0	185.0	35.0
AFE88201RRUR	UQFN	RRU	24	3000	367.0	367.0	35.0
AFE88201RRUT	UQFN	RRU	24	250	210.0	185.0	35.0

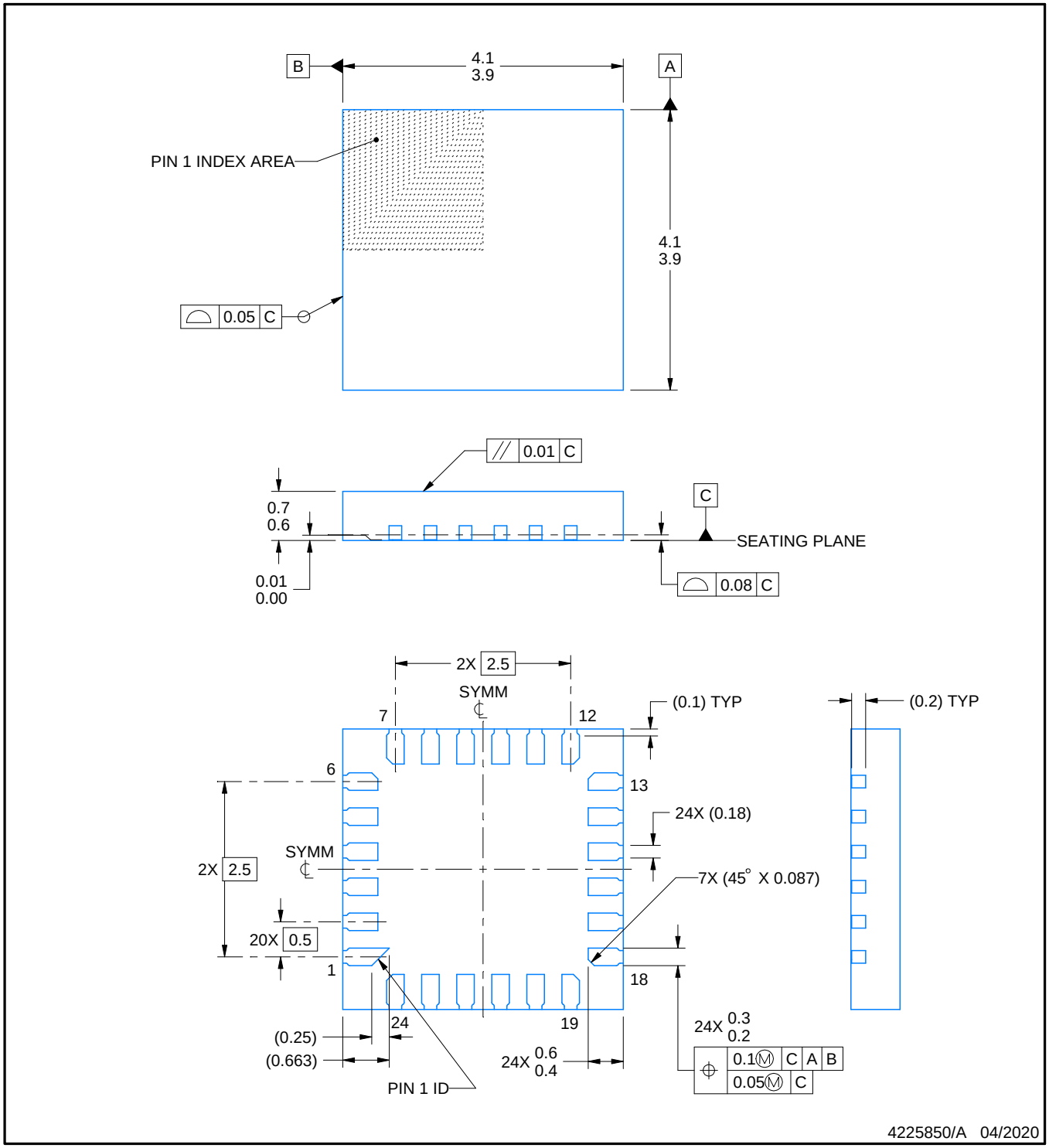

NOTES:

1. All linear dimensions are in millimeters. Any dimensions in parenthesis are for reference only. Dimensioning and tolerancing per ASME Y14.5M.
2. This drawing is subject to change without notice.
3. The package thermal pad must be soldered to the printed circuit board for thermal and mechanical performance.

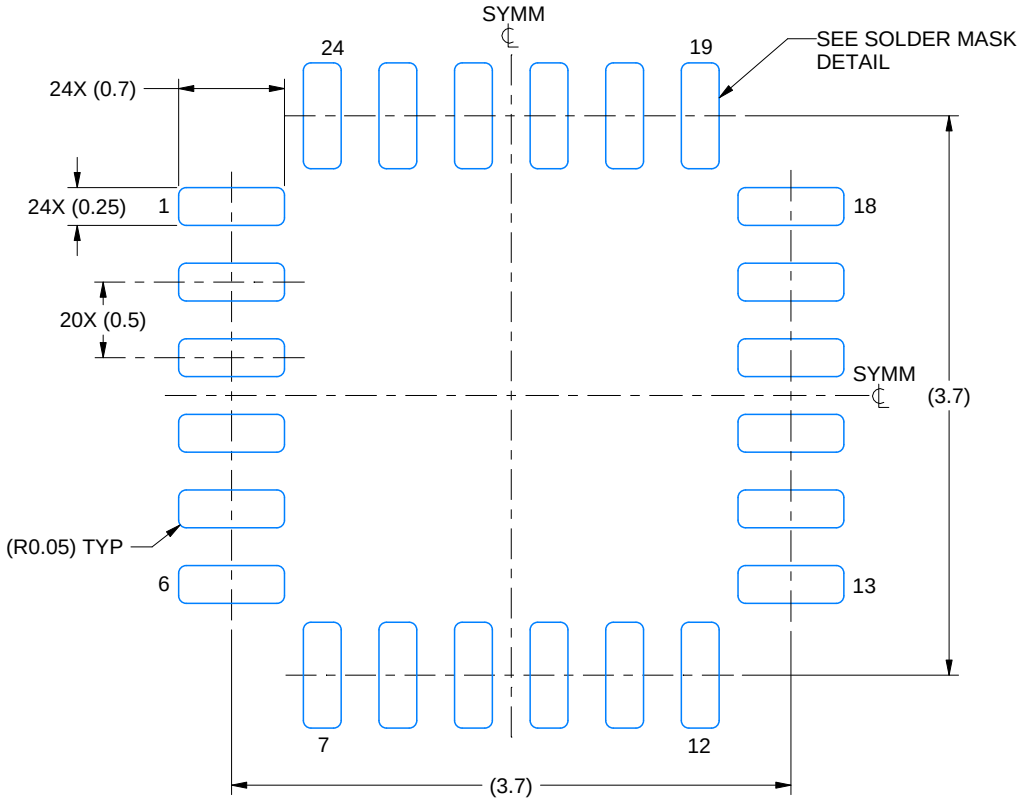

LAND PATTERN EXAMPLE
EXPOSED METAL SHOWN
SCALE: 20X

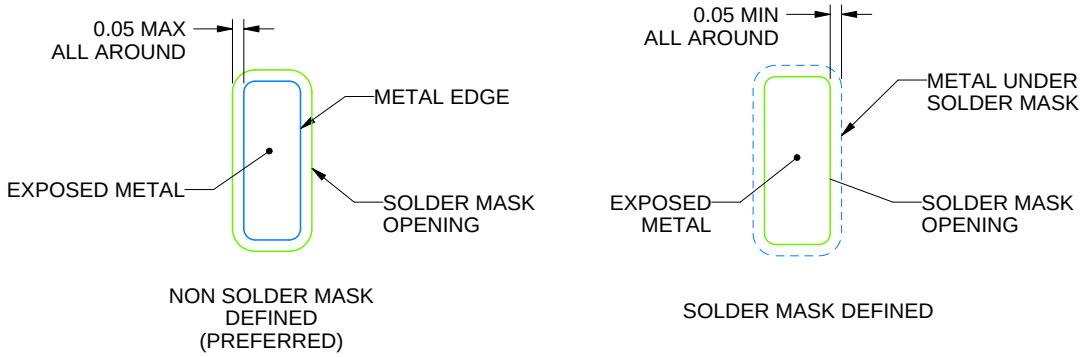

SOLDER MASK DETAILS

4225850/A 04/2020

NOTES: (continued)

4. This package is designed to be soldered to a thermal pad on the board. For more information, see Texas Instruments literature number SLUA271 (www.ti.com/lit/slua271).
5. Vias are optional depending on application, refer to device data sheet. If any vias are implemented, refer to their locations shown on this view. It is recommended that vias under paste be filled, plugged or tented.

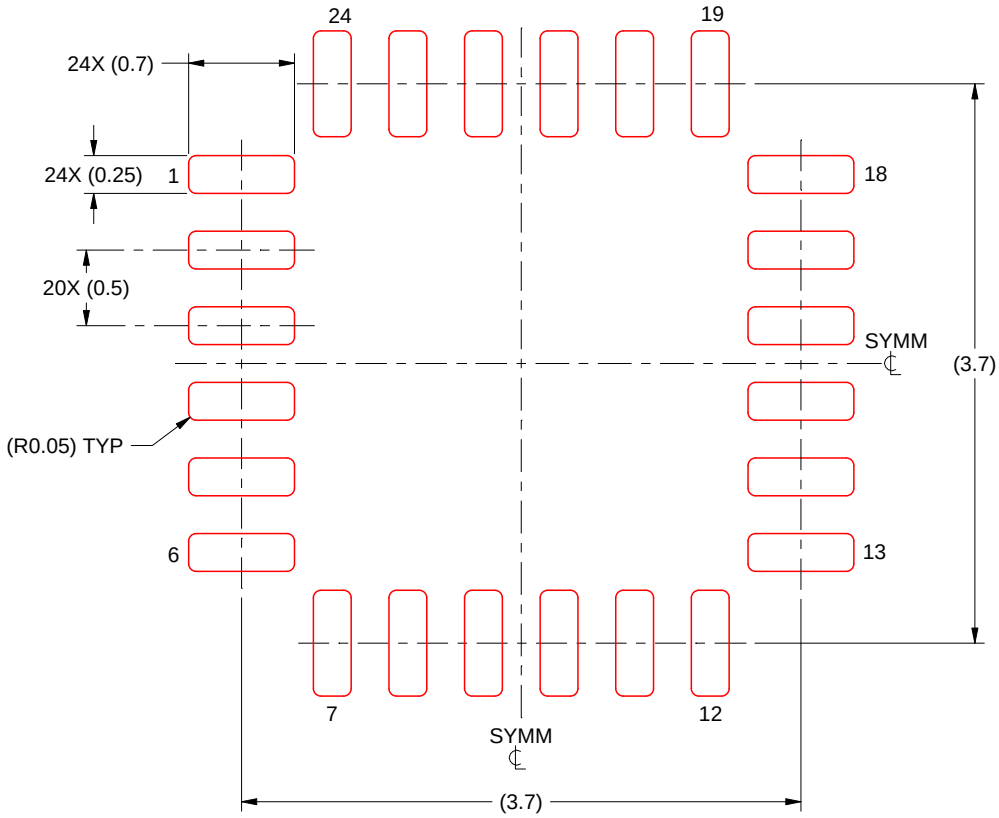

SOLDER PASTE EXAMPLE
BASED ON 0.125 MM THICK STENCIL
SCALE: 20X

4225850/A 04/2020

NOTES: (continued)

6. Laser cutting apertures with trapezoidal walls and rounded corners may offer better paste release. IPC-7525 may have alternate design recommendations.

重要なお知らせと免責事項

TI は、技術データと信頼性データ (データシートを含みます)、設計リソース (リファレンス デザインを含みます)、アプリケーションや設計に関する各種アドバイス、Web ツール、安全性情報、その他のリソースを、欠陥が存在する可能性のある「現状のまま」提供しており、商品性および特定目的に対する適合性の黙示保証、第三者の知的財産権の非侵害保証を含むいかなる保証も、明示的または黙示的にかかわらず拒否します。

これらのリソースは、TI 製品を使用する設計の経験を積んだ開発者への提供を意図したものです。(1) お客様のアプリケーションに適した TI 製品の選定、(2) お客様のアプリケーションの設計、検証、試験、(3) お客様のアプリケーションに該当する各種規格や、その他のあらゆる安全性、セキュリティ、規制、または他の要件への確実な適合に関する責任を、お客様のみが単独で負うものとします。

上記の各種リソースは、予告なく変更される可能性があります。これらのリソースは、リソースで説明されている TI 製品を使用するアプリケーションの開発の目的でのみ、TI はその使用をお客様に許諾します。これらのリソースに関して、他の目的で複製することや掲載することは禁止されています。TI や第三者の知的財産権のライセンスが付与されている訳ではありません。お客様は、これらのリソースを自身で使用した結果発生するあらゆる申し立て、損害、費用、損失、責任について、TI およびその代理人を完全に補償するものとし、TI は一切の責任を拒否します。

TI の製品は、 TI の販売条件 、 TI の総合的な品質ガイドライン 、 ti.com または TI 製品などに関連して提供される他の適用条件に従い提供されます。TI がこれらのリソースを提供することは、適用される TI の保証または他の保証の放棄の拡大や変更を意味するものではありません。 TI がカスタム、またはカスタマー仕様として明示的に指定していない限り、TI の製品は標準的なカタログに掲載される汎用機器です。

お客様がいかなる追加条項または代替条項を提案する場合も、TI はそれらに異議を唱え、拒否します。

Copyright © 2026, Texas Instruments Incorporated

最終更新日：2025 年 10 月