BQ2404x 1A、シングル入力、シングル・セル・リチウムイオンおよびリチウムポリマ・バッテリ・チャージャ、自動スタート機能付き

1 特長

- 充電
  - 1% の充電電圧精度
  - 10% の充電電流精度
  - 最大入力電流制限として USB 100mA と 500mA をピン選択可能
  - 終端とプリチャージのスレッショルドをプログラム可能、BQ24040 および BQ24045
  - BQ24045 による高電圧 (4.35V) ケミストリーのサポート
- 保護
  - 入力定格 30V、6.6V または 7.1V の入力過電圧保護機能付き
  - 入力電圧のダイナミックな電源管理
  - 125℃のサーマル・レギュレーション、150℃のサーマル・シャットダウン保護
  - OUT 短絡保護および ISET 短絡検出
  - バッテリ NTC により JEITA 範囲全体で動作 - 低温時は ½ 高速充電電流、高温時は 4.06V、BQ24040 および BQ24045
  - 固定の 10 時間安全タイマ、BQ24040 および BQ24045
- システム
  - サーミスタ付きバッテリ・パックがない場合の自動終端およびタイマ・ディスエーブル・モード (TTDM)、BQ24040 および BQ24045
  - ステータス表示 - 充電中/完了
  - 小型 2 × 2mm^2 DFN-10 パッケージで供給
  - 生産ライン・テスト用の自動スタート機能を内蔵、BQ24041
- 機能安全対応 (BQ24074)
  - 機能安全システムの設計に役立つ資料を利用可能
- 安全関連認証:
  - IEC 62368-1 CB 認証 (BQ24040、BQ24045)

2 アプリケーション

- TWS ヘッドセットとヘッドホン
- スマートウォッチとリストバンド
- ワイヤレス・スピーカ
- モバイル POS
- ポータブル医療機器

3 概要

BQ2404x シリーズのデバイスは、スペースに制約のあるポータブル・アプリケーションを対象とした高集積リチウムイオンおよびリチウムポリマ・リニア・チャージャ・デバイスです。このデバイスは、USB ポートまたは AC アダプタで動作します。入力電圧範囲が高く、入力過電圧保護が搭載されているため、レギュレーションのない低コストのアダプタもサポートできます。

BQ2404x には、バッテリを充電する電源出力が 1 つあります。平均システム負荷によって 10 時間の安全タイマ内でバッテリをフル充電できなくならない限り、バッテリと並行してシステム負荷を使用できます。

バッテリの充電は、コンディショニング、定電流、定電圧の 3 フェーズで行われます。すべての充電フェーズで、内部の制御ループが IC の接合部温度を監視し、内部温度スレッショルドを超えた場合には充電電流を減少させます。

充電器の出力段と、充電電流検出機能は、完全に統合されています。チャージャには、高精度の電流および電圧レギュレーション・ループ、充電ステータスの表示、および充電終了の機能があります。プリチャージ電流および終了電流スレッショルドは、BQ24040 および BQ24045 上にある外部抵抗を介してプログラムできます。高速充電電流値も外部抵抗を介してプログラムできます。

製品情報

部品番号 (1)	パッケージ	本体サイズ (公称)
BQ24040	WSON (10)	2.00mm × 2.00mm
BQ24041		
BQ24045		

(1) 利用可能なすべてのパッケージについては、このデータシートの末尾にある注文情報を参照してください。

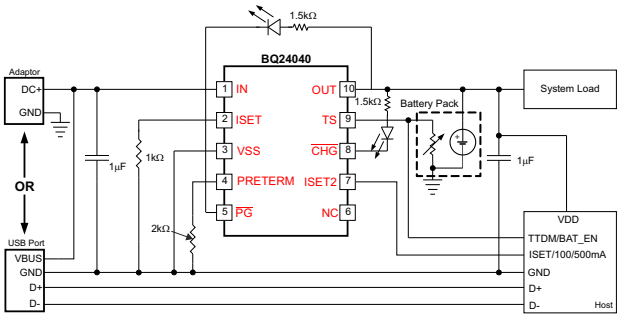

概略回路図

英語版の TI 製品についての情報を翻訳したこの資料は、製品の概要を確認する目的で便宜的に提供しているものです。該当する正式な英語版の最新情報は、www.ti.com で閲覧でき、その内容が常に優先されます。TI では翻訳の正確性および妥当性につきましては一切保証いたしません。実際の設計などの前には、必ず最新版の英語版をご参照くださいますようお願いいたします。

Table of Contents

1 特長 ... 1
2 アプリケーション ... 1
3 概要 ... 1
4 Revision History ... 2
5 Device Comparison ... 5
6 Pin Configuration and Functions ... 5
7 Specifications ... 7
7.1 Absolute Maximum Ratings ... 7
7.2 ESD Ratings ... 7
7.3 Recommended Operating Conditions ... 7
7.4 Thermal Information ... 8
7.5 Electrical Characteristics ... 8
7.6 Timing Requirements ... 11
7.7 Typical Operational Characteristics (Protection Circuits Waveforms) ... 12
8 Detailed Description ... 13
8.1 Overview ... 13
8.2 Functional Block Diagram ... 14
8.3 Feature Description ... 15
8.4 Device Functional Modes ... 18
9 Application and Implementation ... 23
9.1 Application Information ... 23
9.2 Typical Applications ... 23
10 Power Supply Recommendations ... 30
11 Layout ... 31
11.1 Layout Guidelines ... 31
11.2 Layout Example ... 31
11.3 Thermal Considerations ... 32
12 Device and Documentation Support ... 33
12.1 Device Support ... 33
12.2 Documentation Support ... 33
12.3 ドキュメントの更新通知を受け取る方法 ... 33
12.4 サポート・リソース ... 33
12.5 Trademarks ... 33
12.6 静電気放電に関する注意事項 ... 33
12.7 用語集 ... 33
13 Mechanical, Packaging, and Orderable Information ... 33

4 Revision History

資料番号末尾の英字は改訂を表しています。その改訂履歴は英語版に準じています。

Changes from Revision G (June 2020) to Revision H (February 2021) — **Page**

- BQ24040、BQ24045 を IEC 62368-1 CB 認定機能に追加 ... 1
- Changed $I_{BD\text{-}SINK}$ minimum from 7 mA to 6 mA ... 8
- Changed I_{IH} maximum from 8 µA to 9.5 µA ... 8

Changes from Revision F (March 2015) to Revision G (June 2020) — **Page**

- 機能安全対応の特長を追加 ... 1
- IEC 62368-1 対応を追加 ... 1
- 「アプリケーション」を変更 ... 1
- 検出後の切断を概略回路図から削除 ... 1
- Changed thermal pad description ... 5
- Added $I_{OUT(SC)}$ test condition ... 8
- Changed 図 7-5 ... 12
- Changed the *セクション 8.3.4* section ... 15
- Added (BQ24040) to 図 8-4 and 図 8-5 ... 19
- Deleted Disconnect after Detection from 図 9-1 ... 23
- Added link to BQ24040 Application Report ... 24
- Deleted Disconnect after Detection from 図 9-20 ... 28
- Moved *セクション 11.3* to *Layout* section ... 32

Changes from Revision E (February 2014) to Revision F (March 2015) — **Page**

- 「製品情報」表のヘッダー情報を変更し、デバイス番号からパッケージ指定を削除 ... 1
- Changed the *Terminal Configuration and Functions* To: *セクション 6* ... 5
- The storage temperature range has been moved to the *セクション 7.1* ... 7
- Changed the *Handling Ratings* table To: *セクション 7.2* and updated the guidelines ... 7
- Added the package family to the column heading in the *セクション 7.4* ... 8

Copyright © 2023 Texas Instruments Incorporated

- Added the NOTE to the *セクション 9* 23

Changes from Revision D (March 2013) to Revision E (February 2014) **Page**

- 「取り扱い定格」表、「機能説明」セクション、「デバイスの機能モード」セクション、「アプリケーションと実装」セクション、「電源に関する推奨事項」セクション、「レイアウト」セクション、「デバイスおよびドキュメントのサポート」セクション、「メカニカル、パッケージ、および注文情報」セクションを追加。 1
- Changed the Dissipation Rating table to the *セクション 7.4* 8
- Changed $V_{O_HT(REG)}$ in the Electrical Characteristics table to include new values BQ24045 8
- Added the Timing Requirements table 11
- Deleted the last sentence in the first paragraph of the TS (BQ24040/5) section 20
- Added the *セクション 9.2.1.3* 25

Changes from Revision C (February 2013) to Revision D (March 2013) — Page

- 「特長」を「固定の 10 時間安全タイマ」から「固定の 10 時間安全タイマ、BQ24040 および BQ24045」に変更.....1
- Changed the OUT terminal *DESCRIPTION* 5
- Changed R_{ISET} NOM value in the ROC table From: 49.9 kΩ To: 10.8 kΩ.....7
- Changed R_{ISET_SHORT} test conditions From: R_{ISET} : 600Ω → 250Ω To: R_{ISET} : 540Ω → 250Ω.....8
- Changed I_{OUT_CL} test conditions From: R_{ISET} : 600Ω → 250Ω To: R_{ISET} : 540Ω → 250Ω.....8
- Deleted: Internally Set: BQ24041 from the TERMINATION section.....8
- Added BQ24040 and BQ24045 only to the BATTERY CHARGING TIMERS AND FAULT TIMERS section...11
- Changed text in the ISET section From: "maximum current between 1.1A and 1.35A" To: "maximum current between 1.05A and 1.4A".....19
- Changed the Timers section.....21
- Deleted: I_{OUT_TERM} = 54mA from the Typical Application Circuit: BQ24041, with ASI and ASO conditions.....28

Changes from Revision B (June 2012) to Revision C (February 2013) — Page

- デバイス BQ24045 を追加.....1
- Added additional K_{ISET} information to the Electrical Characteristics table.....8
- Added graph - Load Regulation.....12
- Added graph - Line Regulation.....12

Changes from Revision A (September 2009) to Revision B (June 2012) — Page

- リチウムイオンのすべてのオカレンスを以下のように変更:リチウムイオンとリチウムポリマ.....1

Changes from Revision * (August 2009) to Revision A (September 2009) — Page

- 文書のステータスを以下のように変更:「製品プレビュー」から「量産データ」.....1

Copyright © 2023 Texas Instruments Incorporated

5 Device Comparison

PART NO.	$V_{O(REG)}$	V_{OVP}	PreTerm	ASI/ASO	TS/BAT_EN	PG	PACKAGE
BQ24040	4.20 V	6.6 V	Yes	No	TS (JEITA)	Yes	10-pin 2 × 2mm^2 DFN
BQ24041	4.20 V	7.1 V	No	Yes	$\overline{\text{BAT_EN}}$ Terminaton Disabled	Yes	10-pin 2 × 2mm^2 DFN
BQ24045	4.35V	6.6V	Yes	No	TS (JEITA)	Yes	10-pin 2 × 2mm^2 DFN

6 Pin Configuration and Functions

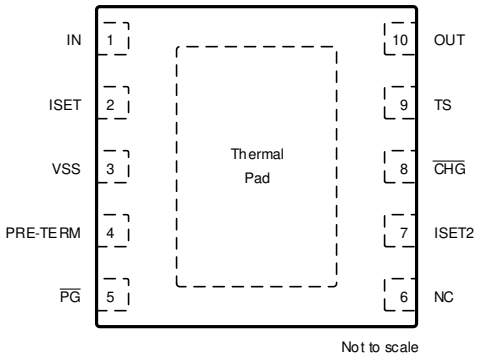

図 6-1. BQ24040 and BQ24045 DSQ Package 10-Pin WSON Top View

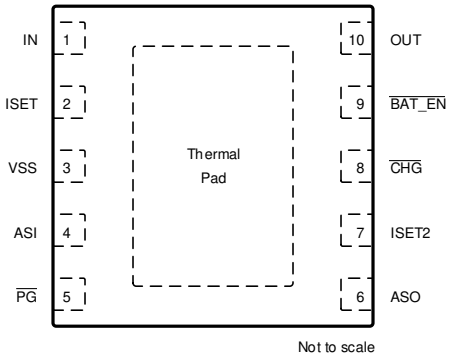

図 6-2. BQ24041 DSQ Package 10-Pin WSON Top View

表 6-1. Pin Functions

PIN			I/O	DESCRIPTION
NAME	BQ24040 BQ24045	BQ24041		
IN	1	1	I	Input power, connected to external DC supply (AC adapter or USB port). Expected range of bypass capacitors 1µF to 10µF, connect from IN to V_{SS}.
OUT	10	10	O	Battery Connection. System Load may be connected. Expected range of bypass capacitors 1µF to 10µF.
PRE-TERM	4	–	I	Programs the Current Termination Threshold (5 to 50% of Iout which is set by ISET) and Sets the Pre-Charge Current to twice the Termination Current Level. Expected range of programming resistor is 1k to 10kΩ (2k: Ipgm/10 for term; Ipgm/5 for precharge)
ISET	2	2	I	Programs the Fast-charge current setting. External resistor from ISET to VSS defines fast charge current value. Range is 10.8k (50mA) to 540Ω (1000mA).
ISET2	7	7	I	Programming the Input/Output Current Limit for the USB or Adaptor source: BQ24040/5 => High = 500mAmax, Low = ISET, FLOAT = 100mAmax. BQ24041 => High = 410mAmax, Low = ISET, FLOAT = 100mAmax.
TS	9[(1)]	–	I	Temperature sense terminal connected to BQ24040/5 -10k at 25°C NTC thermistor, in the battery pack. Floating T terminal or pulling High puts part in TTDM “Charger” Mode and disable TS monitoring, Timers and Termination. Pulling terminal Low disables the IC. If NTC sensing is not needed, connect this terminal to VSS through an external 10 kΩ resistor. A 250kΩ from TS to ground will prevent IC entering TTDM mode when battery with thermistor is removed.
$\overline{\text{BAT_EN}}$	–	9	I	Charge Enable Input (active low)
VSS	3	3	–	Ground terminal
$\overline{\text{CHG}}$	8	8	O	Low (FET on) indicates charging and Open Drain (FET off) indicates no Charging or Charge complete.

表 6-1. Pin Functions (continued)

PIN			I/O	DESCRIPTION
NAME	BQ24040 BQ24045	BQ24041		
$\overline{PG}$	5	5	O	Low (FET on) indicates the input voltage is above UVLO and the OUT (battery) voltage.
ASI	–	4	I	Auto start External input. Internal 200kΩ pull-down.
ASO	–	6	O	Auto Start Logic Output
NC	6	–	NA	Do not make a connection to this terminal (for internal use) – Do not route through this terminal
Thermal Pad and Package	Pad 2x2mm^2	Pad 2x2mm^2	–	Connect exposed thermal pad to VSS terminal of the device and main ground plane. The thermal pad must be connected to the same potential as the VSS terminal on the printed circuit board. Do not use the thermal pad as the primary ground input for the device. VSS terminal must be connected to ground at all times.

(1) Spins have different terminal definitions

Copyright © 2023 Texas Instruments Incorporated

7 Specifications

7.1 Absolute Maximum Ratings

over operating free-air temperature range (unless otherwise noted)[1]

			MIN	MAX	UNIT
	Input voltage	IN (with respect to VSS)	–0.3	30	V
		OUT (with respect to VSS)	–0.3	7	V
		PRE-TERM, ISET, ISET2, TS, $\overline{CHG}$, $\overline{PG}$, ASI, ASO (with respect to VSS)	–0.3	7	V
	Input current	IN		1.25	A
	Output current (continuous)	OUT		1.25	A
	Output sink current	$\overline{CHG}$		15	mA
T_J	Junction temperature		–40	150	°C
T_{stg}	Storage temperature		–65	150	°C

(1) Stresses beyond those listed under absolute maximum ratings may cause permanent damage to the device. These are stress ratings only, and functional operation of the device at these or any other conditions beyond those indicated under recommended operating conditions is not implied. Exposure to absolute-maximum-rated conditions for extended periods may affect device reliability. All voltage values are with respect to the network ground terminal unless otherwise noted.

7.2 ESD Ratings

			VALUE	UNIT
$V_{(ESD)}$	Electrostatic discharge[3]	Human-body model (HBM), per ANSI/ESDA/JEDEC JS-001[1]	±3000	V
		Charged-device model (CDM), per JEDEC specification JESD22-C101 or ANSI/ESDA/JEDEC JS-002[2]	±1500	

(1) JEDEC document JEP155 states that 500-V HBM allows safe manufacturing with a standard ESD control process.
(2) JEDEC document JEP157 states that 250-V CDM allows safe manufacturing with a standard ESD control process.
(3) The test was performed on IC terminals that may potentially be exposed to the customer at the product level. The BQ2404x IC requires a minimum of the listed capacitance, external to the IC, to pass the ESD test. The D+ D- lines require clamp diodes such as CM1213A-02SR from CMD to protect the IC for this testing.

7.3 Recommended Operating Conditions

see [1]

		MIN	NOM	UNIT
V_{IN}	IN voltage range	3.5	28	V
	IN operating voltage range, Restricted by V_{DPM} and V_{OVP}	4.45	6.45	V
I_{IN}	Input current, IN terminal		1	A
I_{OUT}	Current, OUT terminal		1	A
T_J	Junction temperature	0	125	°C
$R_{PRE-TERM}$	Programs precharge and termination current thresholds	1	10	kΩ
R_{ISET}	Fast-charge current programming resistor	0.540	10.8	kΩ
R_{TS}	10k NTC thermistor range without entering $\overline{BAT_EN}$ or TTDM	1.66	258	kΩ

(1) Operation with V_{IN} less than 4.5V or in drop-out may result in reduced performance.

7.4 Thermal Information

THERMAL METRIC[1]		BQ2404x DSQ (WSON) 10 PINS	UNIT
$R_{\theta JA}$	Junction-to-ambient thermal resistance	63.5	°C/W
$R_{\theta JC(top)}$	Junction-to-case (top) thermal resistance	79.5	°C/W
$R_{\theta JB}$	Junction-to-board thermal resistance	33.9	°C/W
ψ_{JT}	Junction-to-top characterization parameter	7.8	°C/W
ψ_{JB}	Junction-to-board characterization parameter	34.3	°C/W
$R_{\theta JC(bot)}$	Junction-to-case (bottom) thermal resistance	7.5	°C/W

(1) For more information about traditional and new thermal metrics, see the *Semiconductor and IC Package Thermal Metrics* application report.

7.5 Electrical Characteristics

Over junction temperature range 0°C ≤ T_J ≤ 125°C and recommended supply voltage (unless otherwise noted)

PARAMETER		TEST CONDITIONS	MIN	TYP	MAX	UNIT
INPUT						
UVLO	Undervoltage lock-out Exit	V_{IN}: 0V → 4V Update based on sim/char	3.15	3.3	3.45	V
V_{HYS_UVLO}	Hysteresis on V_{UVLO_RISE} falling	V_{IN}: 4V→0V, $V_{UVLO_FALL} = V_{UVLO_RISE} - V_{HYS-UVLO}$	175	227	280	mV
V_{IN-DT}	Input power good detection threshold is V_{OUT} + V_{IN-DT}	(Input power good if $V_{IN} > V_{OUT} + V_{IN-DT}$); V_{OUT} = 3.6V, V_{IN}: 3.5V → 4V	30	80	145	mV
$V_{HYS-INDT}$	Hysteresis on V_{IN-DT} falling	V_{OUT} = 3.6V, V_{IN}: 4V → 3.5V		31		mV
V_{OVP}	Input over-voltage protection threshold	V_{IN}: 5V → 12V (BQ24040, BQ24045)	6.5	6.65	6.8	V
		V_{IN}: 5V → 12V (BQ24041)	6.9	7.1	7.3	
$V_{HYS-OVP}$	Hysteresis on OVP	V_{IN}: 11V → 5V		95		mV
V_{IN-DPM}	USB/Adaptor low input voltage protection. Restricts Iout at V_{IN-DPM}	Feature active in USB mode; Limit Input Source Current to 50mA; V_{OUT}= 3.5V; R_{ISET} = 825Ω	4.34	4.4	4.46	V
		Feature active in Adaptor mode; Limit Input Source Current to 50mA; V_{OUT} = 3.5V; R_{ISET} = 825	4.24	4.3	4.46	
$I_{IN-USB-CL}$	USB input I-Limit 100mA	ISET2 = Float; R_{ISET} = 825Ω	85	92	100	mA
	USB input I-Limit 500mA, BQ24040, BQ24045	ISET2 = High; R_{ISET} = 825Ω	430	462	500	
	USB input I-Limit 380mA, BQ24041	ISET2 = High; R_{ISET} = 825Ω	350	386	420	
ISET SHORT CIRCUIT TEST						
R_{ISET_SHORT}	Highest Resistor value considered a fault (short). Monitored for Iout>90mA	R_{ISET}: 540Ω → 250Ω, Iout latches off. Cycle power to Reset.	280		500	Ω
I_{OUT_CL}	Maximum OUT current limit Regulation (Clamp)	V_{IN} = 5V, V_{OUT} = 3.6V, V_{ISET2} = Low, R_{ISET}: 540Ω → 250Ω, I_{OUT} latches off after $t_{DGL-SHORT}$	1.05		1.4	A
BATTERY SHORT PROTECTION						
$V_{OUT(SC)}$	OUT terminal short-circuit detection threshold/ precharge threshold	V_{OUT}: 3V → 0.5V, no deglitch	0.75	0.8	0.85	V
$V_{OUT(SC-HYS)}$	OUT terminal Short hysteresis	Recovery ≥ $V_{OUT(SC)}$ + $V_{OUT(SC-HYS)}$; Rising, no Deglitch		77		mV
$I_{OUT(SC)}$	Source current to OUT terminal during short-circuit detection	V_{OUT} < 0.8 V	10	15	20	mA
QUIESCENT CURRENT						
$I_{OUT(PDWN)}$	Battery current into OUT terminal	V_{IN} = 0V			1	μA
$I_{OUT(DONE)}$	OUT terminal current, charging terminated	V_{IN} = 6V, $V_{OUT} > V_{OUT(REG)}$			6	
$I_{IN(STDBY)}$	Standby current into IN terminal	TS = LO, V_{IN} ≤ 6V			125	μA
I_{CC}	Active supply current, IN terminal	TS = open, V_{IN} = 6V, TTDM – no load on OUT terminal, $V_{OUT} > V_{OUT(REG)}$, IC enabled		0.8	1	mA

Copyright © 2023 Texas Instruments Incorporated

7.5 Electrical Characteristics (continued)

Over junction temperature range 0°C ≤ T_J ≤ 125°C and recommended supply voltage (unless otherwise noted)

PARAMETER		TEST CONDITIONS	MIN	TYP	MAX	UNIT
BATTERY CHARGER FAST-CHARGE						
$V_{OUT(REG)}$	Battery regulation voltage	V_{IN} = 5.5V, I_{OUT} = 25mA, ($V_{TS-45°C}$ ≤ V_{TS} ≤ $V_{TS-0°C}$, BQ24040)	4.16	4.2	4.23	V
		V_{IN} = 5.5V, I_{OUT} = 25mA, ($V_{TS-45°C}$ ≤ V_{TS} ≤ $V_{TS-0°C}$, BQ24045)	4.30	4.35	4.40	
$V_{O_HT(REG)}$	Battery hot regulation voltage	V_{IN} = 5.5V, I_{OUT} = 25mA, ($V_{TS-45°C}$≤ V_{TS} ≤ $V_{TS-0°C}$, BQ24040)	4.02	4.06	4.1	V
		V_{IN} = 5.5V, I_{OUT} = 25mA, ($V_{TS-45°C}$ ≤ V_{TS} ≤ $V_{TS-0°C}$, BQ24045)	4.16	4.2	4.23	
$I_{OUT(RANGE)}$	Programmed Output "fast charge" current range	$V_{OUT(REG)}$ > V_{OUT} > V_{LOWV}; V_{IN} = 5V, ISET2 = LO, R_{ISET} = 540 to 10.8kΩ	10		1000	mA
$V_{DO(IN-OUT)}$	Drop-Out, VIN – VOUT	Adjust VIN down until I_{OUT} = 0.5A, V_{OUT} = 4.15V, R_{ISET} = 540 , ISET2 = Lo (adaptor mode); T_J ≤ 100°C		325	500	mV
I_{OUT}	Output "fast charge" formula	$V_{OUT(REG)}$ > V_{OUT} > V_{LOWV}; V_{IN} = 5V, ISET2 = Lo		K_{ISET}/R_{ISET}		A
K_{ISET}	Fast charge current factor	R_{ISET} = K_{ISET} /I_{OUT}; 50 < I_{OUT} < 1000 mA	510	540	570	AΩ
		R_{ISET} = K_{ISET} /I_{OUT}; 25 < I_{OUT} < 50 mA	480	527	600	
		R_{ISET} = K_{ISET} /I_{OUT}; 10 < I_{OUT} < 25 mA	350	520	680	
K_{ISET}	Fast charge current factor (BQ24045)	R_{ISET} = K_{ISET} /I_{OUT}; 50 < I_{OUT} < 1000 mA	510	560	585	AΩ
		R_{ISET} = K_{ISET} /I_{OUT}; 25 < I_{OUT} < 50 mA	480	557	596	
		R_{ISET} = K_{ISET} /I_{OUT}; 10 < I_{OUT} < 25 mA	350	555	680	
PRECHARGE – SET BY PRETERM terminal: BQ24040 / BQ24045; Internally Set: BQ24041						
V_{LOWV}	Pre-charge to fast-charge transition threshold		2.4	2.5	2.6	V
$I_{PRE-TERM}$	See the Termination Section					
$\%_{PRECHG}$	Pre-charge current, default setting	V_{OUT} < V_{LOWV}; R_{ISET} = 1080Ω; BQ24040: **$R_{PRE-TERM}$= High Z**; BQ24041: Internally Fixed	18	20	22	$\%I_{OUT-CC}$
	Pre-charge current formula	$R_{PRE-TERM}$ = $K_{PRE-CHG}$ (Ω/%) × $\%_{PRE-CHG}$ (%)		$R_{PRE-TERM}/K_{PRE-CHG\%}$		
$K_{PRE-CHG}$	% Pre-charge Factor	V_{OUT} < V_{LOWV}, V_{IN} = 5V, $R_{PRE-TERM}$ = 2k to 10kΩ; R_{ISET} = 1080Ω , $R_{PRE-TERM}$ = $K_{PRE-CHG}$ × $\%I_{FAST-CHG}$, where $\%I_{FAST-CHG}$ is 20 to 100%	90	100	110	Ω/%
		V_{OUT} < V_{LOWV}, V_{IN} = 5V, $R_{PRE-TERM}$ = 1k to 2kΩ; R_{ISET} = 1080Ω, $R_{PRE-TERM}$ = $K_{PRE-CHG}$ × $\%I_{FAST-CHG}$, where $\%I_{FAST-CHG}$ is 10% to 20%	84	100	117	Ω/%
TERMINATION – SET BY PRE-TERM terminal: BQ24040 / BQ24045						
%TERM	Termination Threshold Current, default setting	V_{OUT} > V_{RCH}; R_{ISET} = 1k; BQ24040 / BQ24045: **$R_{PRE-TERM}$= High Z**	9	10	11	$\%I_{OUT-CC}$
	Termination Current Threshold Formula, BQ24040 / BQ24045	$R_{PRE-TERM}$ = K_{TERM} (Ω/%) × %TERM (%)		$R_{PRE-TERM}$/ K_{TERM}		
K_{TERM}	% Term Factor	V_{OUT} > V_{RCH}, V_{IN} = 5V, $R_{PRE-TERM}$ = 2k to 10kΩ ; R_{ISET} = 750Ω K_{TERM} × $\%I_{FAST-CHG}$, where $\%I_{FAST-CHG}$ is 10 to 50%	182	200	216	Ω/%
		V_{OUT} > V_{RCH}, V_{IN} = 5V, $R_{PRE-TERM}$ = 1k to 2kΩ ; R_{ISET} = 750Ω K_{TERM} × %Iset, where %Iset is 5 to 10%	174	199	224	
$I_{PRE-TERM}$	Current for programming the term. and pre-chg with resistor. $I_{Term-Start}$ is the initial PRE-TERM curent.	$R_{PRE-TERM}$ = 2k, V_{OUT} = 4.15V	71	75	81	µA
%TERM	Termination current formula			R_{TERM}/ K_{TERM} %		
$I_{Term-Start}$	Elevated PRE-TERM current for, $t_{Term-Start}$, during start of charge to prevent recharge of full battery,		80	85	92	µA
RECHARGE OR REFRESH – BQ24040 / BQ24045						
V_{RCH}	Recharge detection threshold – Normal Temp	V_{IN} = 5V, V_{TS} = 0.5V, V_{OUT}: 4.25V → V_{RCH}	$V_{O(REG)}$ –0.120	$V_{O(REG)}$–0.095	$V_{O(REG)}$– 0.070	V
	Recharge detection threshold – Hot Temp	V_{IN} = 5V, V_{TS} = 0.2V, V_{OUT}: 4.15V → V_{RCH}	$V_{O_HT(REG)}$ –0.130	$V_{O_HT(REG)}$ –0.105	$V_{O_HT(REG)}$ –0.080	V
BATTERY DETECT ROUTINE – BQ24040 / BQ24045 (NOTE: In Hot mode $V_{O(REG)}$ becomes $V_{O_HT(REG)}$)						
V_{REG-BD}	VOUT Reduced regulation during battery detect	V_{IN} = 5V, V_{TS} = 0.5V, Battery Absent	$V_{O(REG)}$-0.450	$V_{O(REG)}$-0.400	$V_{O(REG)}$-350	V
$I_{BD-SINK}$	Sink current during V_{REG-BD}		6		10	mA
V_{BD-HI}	High battery detection threshold	V_{IN} = 5V, V_{TS} = 0.5V, Battery Absent	$V_{O(REG)}$ -0.150	$V_{O(REG)}$-0.100	$V_{O(REG)}$-0.050	V
V_{BD-LO}	Low battery detection threshold	V_{IN} = 5V, V_{TS} = 0.5V, Battery Absent	V_{REG-BD} +0.50	V_{REG-BD} +0.1	V_{REG-BD} +0.15	V

Copyright © 2023 Texas Instruments Incorporated

7.5 Electrical Characteristics (continued)

Over junction temperature range 0°C ≤ T_J ≤ 125°C and recommended supply voltage (unless otherwise noted)

PARAMETER		TEST CONDITIONS	MIN	TYP	MAX	UNIT
BATTERY-PACK NTC MONITOR; TS Terminal: BQ24040 / BQ24045: 10k NTC						
$I_{NTC-10k}$	NTC bias current	V_{TS} = 0.3V	48	50	52	µA
$I_{NTC-DIS-10k}$	10k NTC bias current when Charging is disabled.	V_{TS} = 0V	27	30	34	µA
$I_{NTC-FLDBK-10k}$	INTC is reduced prior to entering TTDM to keep cold thermistor from entering TTDM	V_{TS}: Set to 1.525V	4	5	6.5	µA
$V_{TTDM(TS)}$	Termination and timer disable mode Threshold – Enter	V_{TS}: 0.5V → 1.7V; Timer Held in Reset	1550	1600	1650	mV
$V_{HYS-TTDM(TS)}$	Hysteresis exiting TTDM	V_{TS}: 1.7V → 0.5V; Timer Enabled		100		mV
$V_{CLAMP(TS)}$	TS maximum voltage clamp	V_{TS} = Open (Float)	1800	1950	2000	mV
$V_{TS_I-FLDBK}$	TS voltage where INTC is reduce to keep thermistor from entering TTDM	INTC adjustment (90 to 10%; 45 to 6.6uS) takes place near this spec threshold. V_{TS}: 1.425V → 1.525V		1475		mV
C_{TS}	Optional Capacitance – ESD			0.22		µF
$V_{TS-0°C}$	Low temperature CHG Pending	Low Temp Charging to Pending; V_{TS}: 1V → 1.5V	1205	1230	1255	mV
$V_{HYS-0°C}$	Hysteresis at 0°C	Charge pending to low temp charging; V_{TS}: 1.5V → 1V		86		mV
$V_{TS-10°C}$	Low temperature, half charge	Normal charging to low temp charging; V_{TS}: 0.5V → 1V	765	790	815	mV
$V_{HYS-10°C}$	Hysteresis at 10°C	Low temp charging to normal CHG; V_{TS}: 1V → 0.5V		35		mV
$V_{TS-45°C}$	High temperature at 4.1V	Normal charging to high temp CHG; V_{TS}: 0.5V → 0.2V	263	278	293	mV
$V_{HYS-45°C}$	Hysteresis at 45°C	High temp charging to normal CHG; V_{TS}: 0.2V → 0.5V		10.7		mV
$V_{TS-60°C}$	High temperature Disable	High temp charge to pending; V_{TS}: 0.2V → 0.1V	170	178	186	mV
$V_{HYS-60°C}$	Hysteresis at 60°C	Charge pending to high temp CHG; V_{TS}: 0.1V → 0.2V		11.5		mV
$V_{TS-EN-10k}$	Charge Enable Threshold, (10k NTC)	V_{TS}: 0V → 0.175V	80	88	96	mV
$V_{TS-DIS_HYS-10k}$	HYS below $V_{TS-EN-10k}$ to Disable, (10k NTC)	V_{TS}: 0.125V → 0V		12		mV
THERMAL REGULATION						
$T_{J(REG)}$	Temperature regulation limit			125		°C
$T_{J(OFF)}$	Thermal shutdown temperature			155		°C
$T_{J(OFF-HYS)}$	Thermal shutdown hysteresis			20		°C
$\overline{BAT_EN}$, BQ24041						
$I_{\overline{BAT_EN}}$	Current Sourced out of terminal	$V_{\overline{BAT_EN}}$ < 1.4 V	2.3	5	9	µA
V_{IL}	Logic LOW enables charger		0		0.4	V
V_{IH}	Logic HIGH disables charger		1.1		6	V
V_{CLAMP}	Floating Clamp Voltage	Floating $\overline{BAT_EN}$ terminal	1.4	1.6	1.8	V
LOGIC LIVELS ON ISET2						
V_{IL}	Logic LOW input voltage	Sink 8 µA			0.4	V
V_{IH}	Logic HIGH input voltage	Source 8 µA	1.4			V
I_{IL}	Sink current required for LO	V_{ISET2} = 0.4V	2		9	µA
I_{IH}	Source current required for HI	V_{ISET2} = 1.4V	1.1		9.5	µA
V_{FLT}	ISET2 Float Voltage		575	900	1225	mV
AUTO START, ASI AND ASO TERMINALS, BQ24041						
V_{ASIL}	Has 200k Internal Pull-down				0.4	V
V_{ASIH}			1.3			V
V_{ASOL}	Auto Start Output Sinks 1mA				0.4	V
V_{ASOH}	Auto Start Input Sources 1mA		V_{OUT} - 0.4			V
LOGIC LEVELS ON $\overline{CHG}$ AND $\overline{PG}$						
V_{OL}	Output LOW voltage	I_{SINK} = 5 mA			0.4	V
I_{LEAK}	Leakage current into IC	$V_{\overline{CHG}}$ = 5V, $V_{\overline{PG}}$ = 5V			1	µA

Copyright © 2023 Texas Instruments Incorporated

7.6 Timing Requirements

			MIN	NOM	MAX	UNIT
INPUT						
$t_{DGL(PG_PWR)}$	Deglitch time on exiting sleep.	Time measured from V_{IN}: 0V → 5V 1µs rise-time to $\overline{PG}$ = low, V_{OUT} = 3.6V		45		µs
$t_{DGL(PG_NO_PWR)}$	Deglitch time on V_{HYS_INDT} power down. Same as entering sleep.	Time measured from V_{IN}: 5V → 3.2V 1µs fall-time to $\overline{PG}$ = OC, V_{OUT} = 3.6V		29		ms
$t_{DGL(OVP_SET)}$	Input over-voltage blanking time	V_{IN}: 5V → 12V		113		µs
$t_{DGL(OVP_REC)}$	Deglitch time exiting OVP	Time measured from V_{IN}: 12V → 5V 1µs fall-time to $\overline{PG}$ = LO		30		µs
ISET SHORT CIRCUIT TEST						
t_{DGL_SHORT}	Deglitch time transition from ISET short to I_{OUT} disable	Clear fault by disconnecting IN or cycling (high / low) TS/ $\overline{BAT_EN}$		1		ms
PRECHARGE – SET BY PRETERM PIN: BQ24040 / BQ24045; Internally Set: BQ24041						
$t_{DGL1(LOWV)}$	Deglitch time on pre-charge to fast-charge transition			70		µs
$t_{DGL2(LOWV)}$	Deglitch time on fast-charge to pre-charge transition			32		ms
TERMINATION – SET BY PRE-TERM PIN: BQ24040 / BQ24045						
$t_{DGL(TERM)}$	Deglitch time, termination detected			29		ms
$t_{Term\text{-}Start}$	Elevated termination threshold initially active for $t_{Term\text{-}Start}$			1.25		min
RECHARGE OR REFRESH – BQ24040 / BQ24045						
$t_{DGL1(RCH)}$	Deglitch time, recharge threshold detected	V_{IN} = 5V, V_{TS} = 0.5V, V_{OUT}: 4.25V → 3.5V in 1µs; $t_{DGL(RCH)}$ is time to ISET ramp		29		ms
$t_{DGL2(RCH)}$	Deglitch time, recharge threshold detected in OUT-Detect Mode	V_{IN} = 5V, V_{TS} = 0.5V, V_{OUT} = 3.5V inserted; $t_{DGL(RCH)}$ is time to ISET ramp		3.6		ms
BATTERY DETECT ROUTINE – BQ24040 / BQ24045 (NOTE: In Hot mode $V_{O(REG)}$ becomes $V_{O_HT(REG)}$)						
$t_{DGL(HI/LOW\ REG)}$	Regulation time at V_{REG} or $V_{REG\text{-}BD}$			25		ms
BATTERY CHARGING TIMERS AND FAULT TIMERS: BQ24040 and BQ24045 only						
t_{PRECHG}	Pre-charge safety timer value	Restarts when entering Pre-charge; Always enabled when in pre-charge.	1700	1940	2250	s
t_{MAXCH}	Charge safety timer value	Clears fault or resets at UVLO, TS/ $\overline{BAT_EN}$ disable, OUT Short, exiting LOWV and Refresh	34000	38800	45000	s
BATTERY-PACK NTC MONITOR; TS Terminal: BQ24040 / BQ24045: 10k NTC						
$t_{DGL(TTDM)}$	Deglitch exit TTDM between states			57		ms
	Deglitch enter TTDM between states			8		µs
$t_{DGL(TS_10C)}$	Deglitch for TS thresholds: 10C.	Normal to Cold Operation; V_{TS}: 0.6V → 1V		50		ms
		Cold to Normal Operation; V_{TS}: 1V → 0.6V		12		ms
$t_{DGL(TS)}$	Deglitch for TS thresholds: 0/45/60C.	Battery charging		30		ms

Copyright © 2023 Texas Instruments Incorporated

7.7 Typical Operational Characteristics (Protection Circuits Waveforms)

SETUP: BQ24040 typical applications schematic; V_{IN} = 5V, V_{BAT} = 3.6V (unless otherwise indicated)

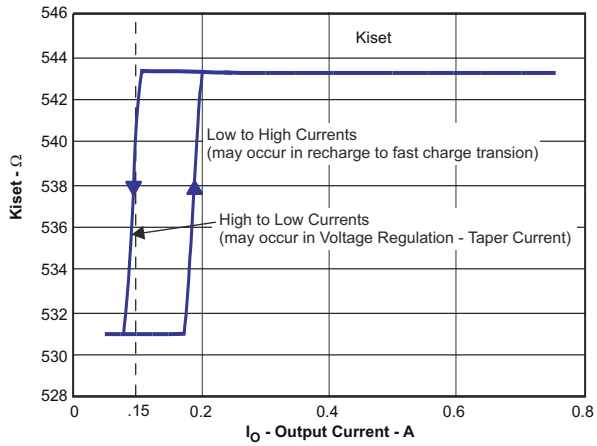

図 7-1. Kiset for Low and High Currents

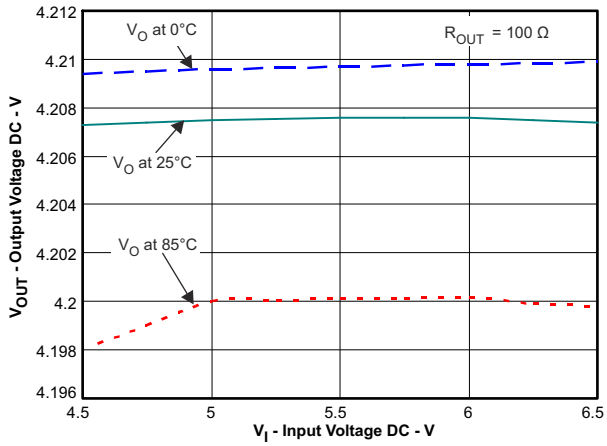

図 7-2. Line Regulation

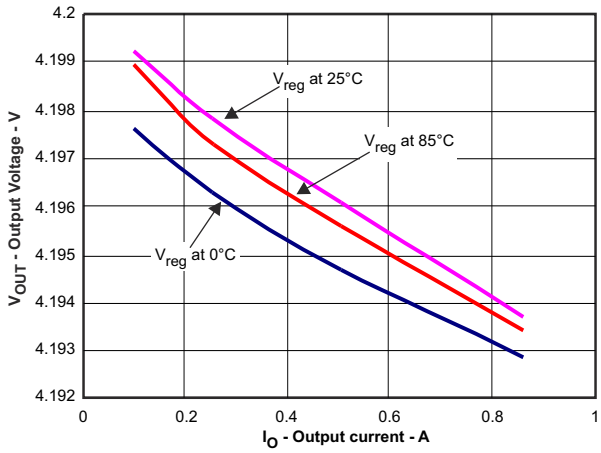

図 7-3. Load Regulation Over Temperature

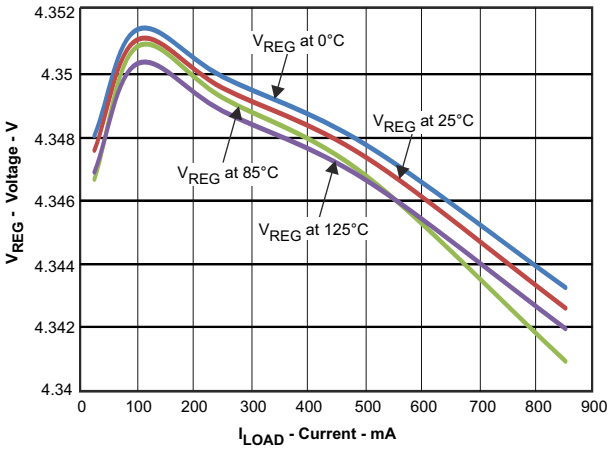

図 7-4. Load Regulation

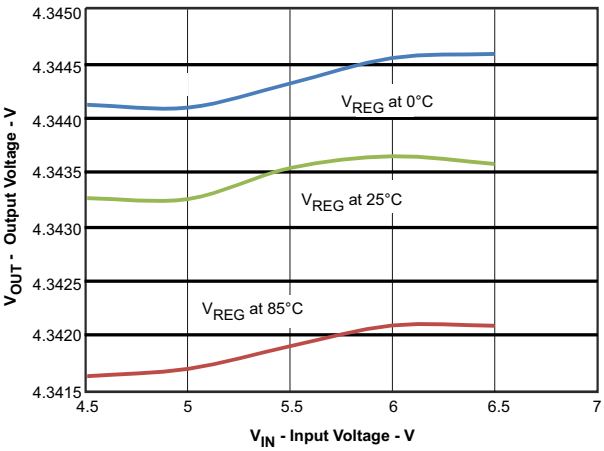

図 7-5. Line Regulation

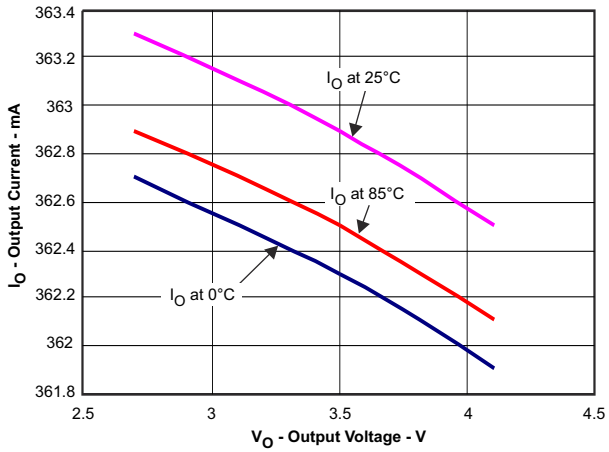

図 7-6. Current Regulation Over Temperature

Copyright © 2023 Texas Instruments Incorporated

8 Detailed Description

8.1 Overview

The BQ2404x is a highly integrated family of 2×2 single cell Li-Ion and Li-Pol chargers. The charger can be used to charge a battery, power a system or both. The charger has three phases of charging: Pre-charge to recover a fully discharged battery, fast-charge constant current to supply the buck charge safely and voltage regulation to safely reach full capacity. The charger is very flexible, allowing programming of the fast-charge current and Pre-charge/Termination Current (BQ24040/5 only). This charger is designed to work with a USB connection or Adaptor (DC out). The charger also checks to see if a battery is present.

The charger also comes with a full set of safety features: JEITA Temperature Standard (BQ24040/5 only), Over-Voltage Protection, DPM-IN, Safety Timers, and ISET short protection. All of these features and more are described in detail below.

The charger is designed for a single power path from the input to the output to charge a single cell Li-Ion or Li-Pol battery pack. Upon application of a 5VDC power source the ISET and OUT short checks are performed to assure a proper charge cycle.

If the battery voltage is below the LOWV threshold, the battery is considered discharged and a preconditioning cycle begins. The amount of precharge current can be programmed using the PRE-TERM terminal which programs a percent of fast charge current (10 to 100%) as the precharge current. This feature is useful when the system load is connected across the battery “stealing” the battery current. The precharge current can be set higher to account for the system loading while allowing the battery to be properly conditioned. The PRE-TERM terminal is a dual function terminal which sets the precharge current level and the termination threshold level. The termination "current threshold" is always half of the precharge programmed current level.

Once the battery voltage has charged to the VLOWV threshold, fast charge is initiated and the fast charge current is applied. The fast charge constant current is programmed using the ISET terminal. The constant current provides the bulk of the charge. Power dissipation in the IC is greatest in fast charge with a lower battery voltage. If the IC reaches 125°C the IC enters thermal requlation, slows the timer clock by half and reduce the charge current as needed to keep the temperature from rising any further. 図 8-1 shows the charging profile with thermal regulation. Typically under normal operating conditions, the IC’s junction temperature is less than 125°C and thermal regulation is not entered.

Once the cell has charged to the regulation voltage the voltage loop takes control and holds the battery at the regulation voltage until the current tapers to the termination threshold. The termination can be disabled if desired. The $\overline{\text{CHG}}$ terminal is low (LED on) during the first charge cycle only and turns off once the termination threshold is reached, regardless if termination, for charge current, is enabled or disabled.

Further details are mentioned in the Operating Modes section.

8.2 Functional Block Diagram

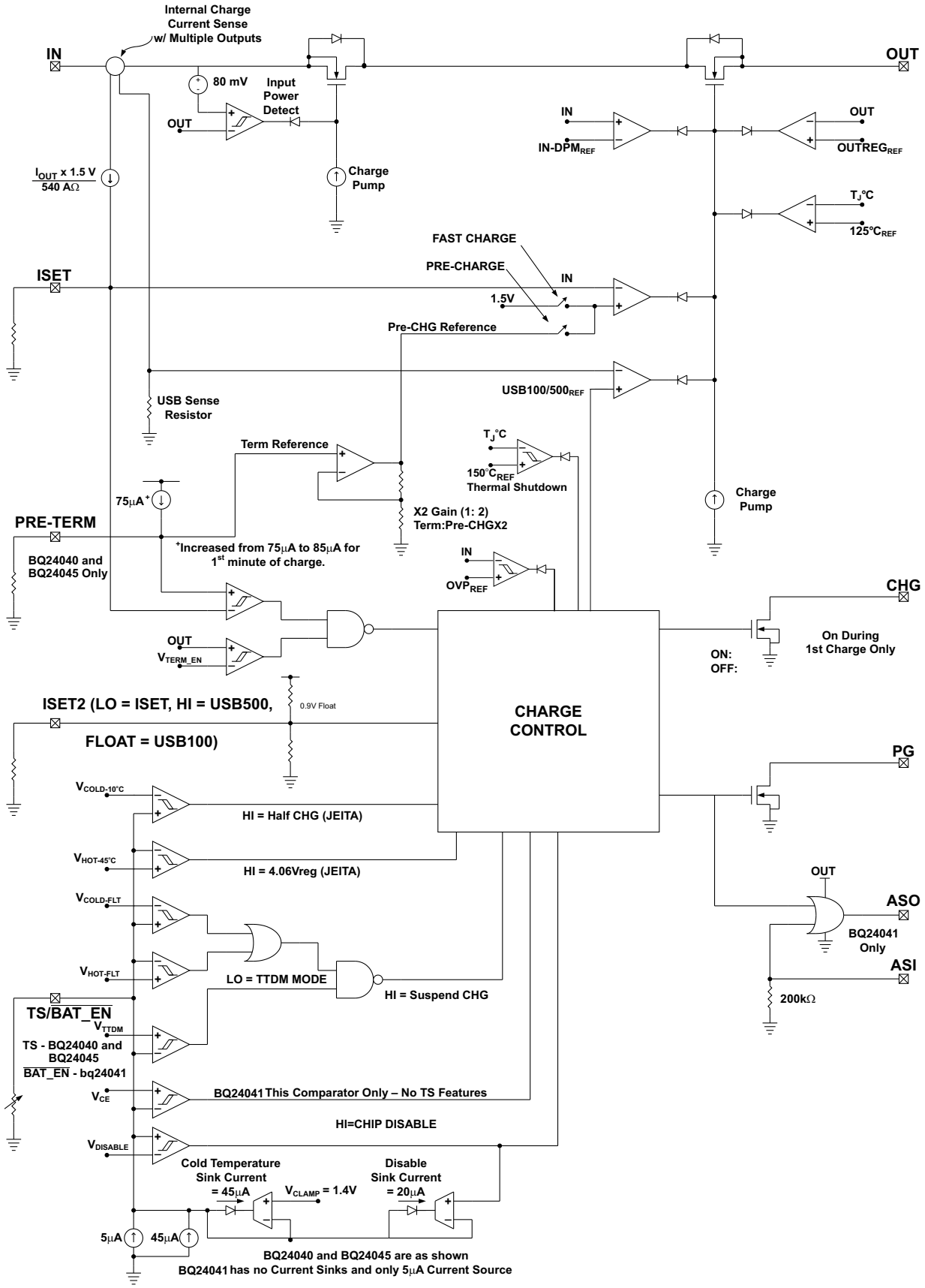

Copyright © 2023 Texas Instruments Incorporated

8.3 Feature Description

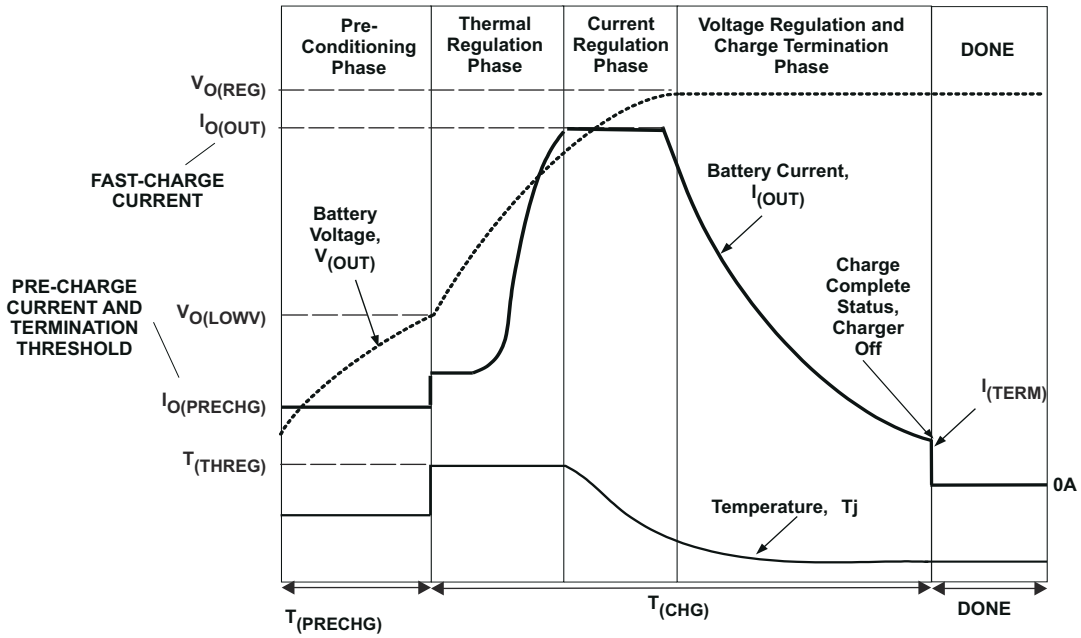

図 8-1. Charging Profile With Thermal Regulation

8.3.1 Power-Down or Undervoltage Lockout (UVLO)

The BQ2404x family is in power down mode if the IN terminal voltage is less than UVLO. The part is considered “dead” and all the terminals are high impedance. Once the IN voltage rises above the UVLO threshold the IC will enter Sleep Mode or Active mode depending on the OUT terminal (battery) voltage.

8.3.2 Power-up

The IC is alive after the IN voltage ramps above UVLO (see sleep mode), resets all logic and timers, and starts to perform many of the continuous monitoring routines. Typically the input voltage quickly rises through the UVLO and sleep states where the IC declares power good, starts the qualification charge at 100mA, sets the input current limit threshold base on the ISET2 terminal, starts the safety timer and enables the $\overline{CHG}$ terminal. See 図 8-2.

8.3.3 Sleep Mode

If the IN terminal voltage is between than V_{OUT}+V_{DT} and UVLO, the charge current is disabled, the safety timer counting stops (not reset) and the $\overline{PG}$ and $\overline{CHG}$ terminals are high impedance. As the input voltage rises and the charger exits sleep mode, the $\overline{PG}$ terminal goes low, the safety timer continues to count, charge is enabled and the $\overline{CHG}$ terminal returns to its previous state. See 図 8-3.

8.3.4 New Charge Cycle

A new charge cycle is started when any of these events occur:

- A valid power source is applied;
- The chip is enabled/disabled using TS pin or BAT_EN;
- Exit of termination/Timer Disable Mode (TTDM);
- Detection of batter insertion;
- OUT voltage drops below the VRCH threshold.

The $\overline{CHG}$ signal is active only during the first charge cycle. Exiting TTDM or the OUT voltage falling below VRCH will not activate the $\overline{CHG}$ signal if it is already in the open-drain (off) state.

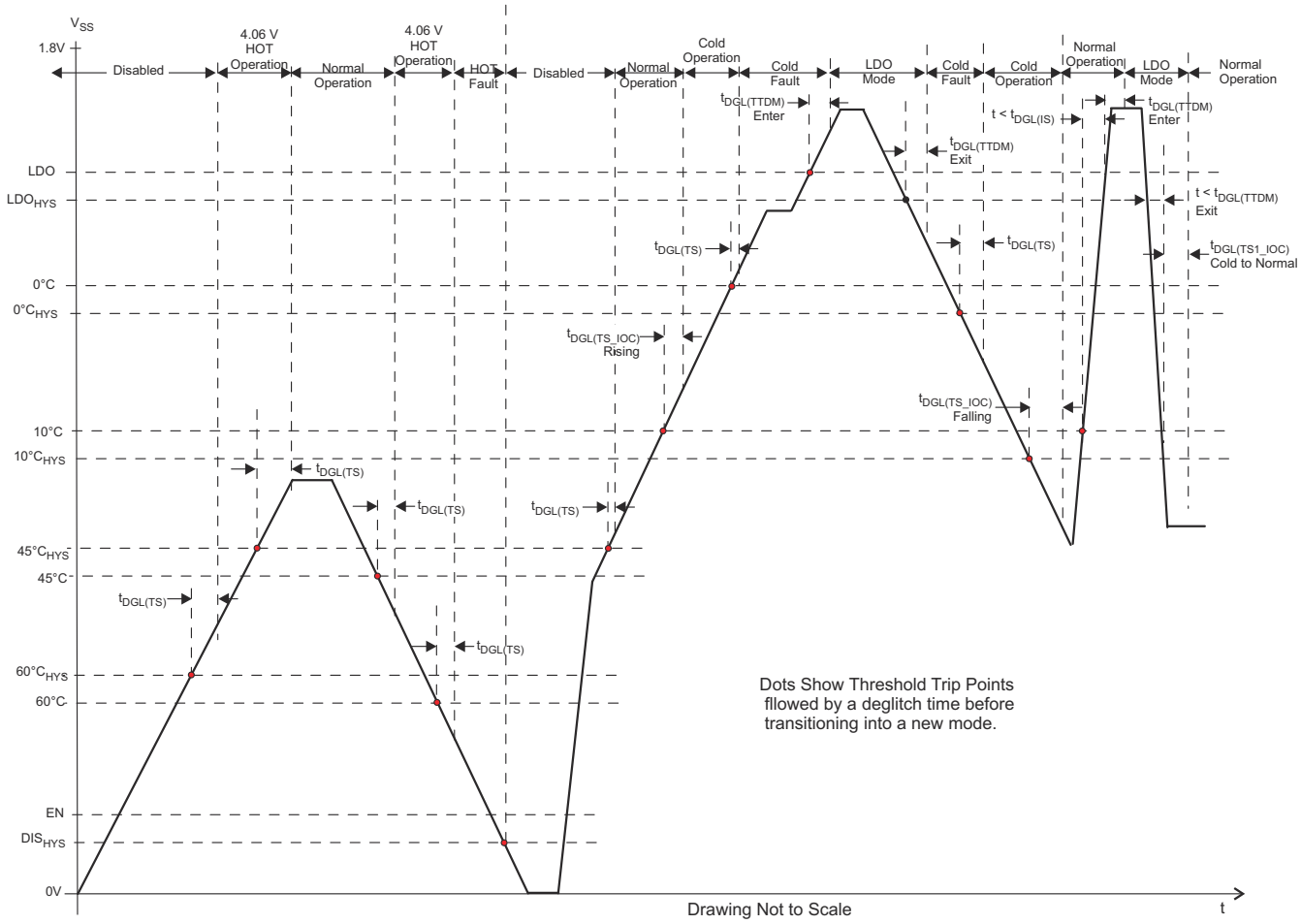

図 8-2. TS Battery Temperature Bias Threshold and Deglitch Timers

Copyright © 2023 Texas Instruments Incorporated

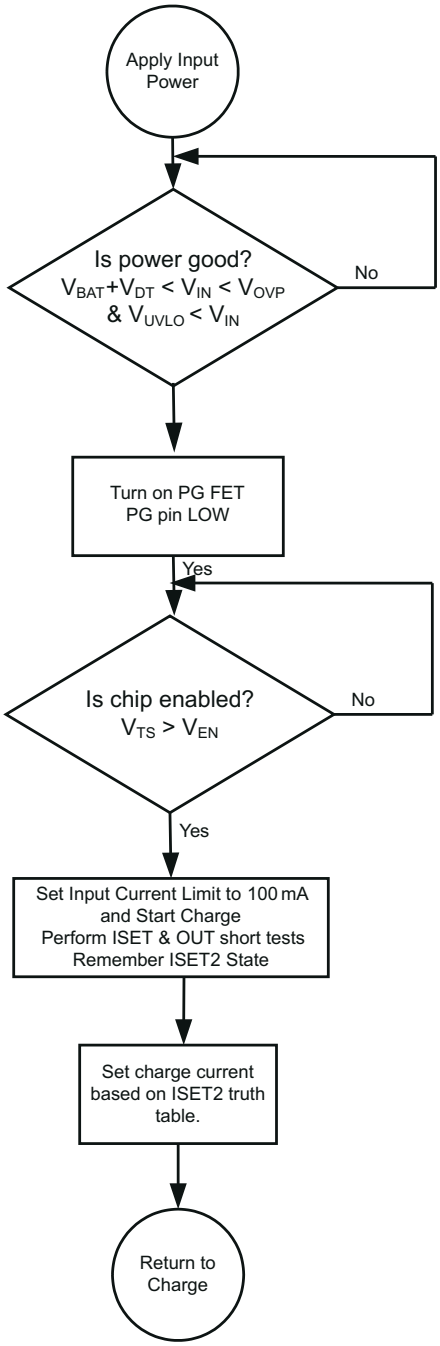

図 8-3. BQ2404x Power-Up Flow Diagram

8.3.5 Overvoltage-Protection (OVP) – Continuously Monitored

If the input source applies an overvoltage, the pass FET, if previously on, turns off after a deglitch, $t_{BLK(OVP)}$. The timer ends and the $\overline{CHG}$ and $\overline{PG}$ terminal goes to a high impedance state. Once the overvoltage returns to a normal voltage, the $\overline{PG}$ terminal goes low, timer continues, charge continues and the $\overline{CHG}$ terminal goes low after a 25ms deglitch. PG terminal is optional on some packages

8.3.6 Power Good Indication ($\overline{PG}$)

After application of a 5V source, the input voltage rises above the UVLO and sleep thresholds (V_{IN}>V_{BAT}+V_{DT}), but is less than OVP (V_{IN}<V_{OVP},), then the PG FET turns on and provides a low impedance path to ground. See 図 9-6, 図 9-7, and 図 9-19.

8.3.7 $\overline{CHG}$ Terminal Indication

The charge terminal has an internal open drain FET which is on (pulls down to V_{SS}) during the first charge only (independent of TTDM) and is turned off once the battery reaches voltage regulation and the charge current tapers to the termination threshold set by the PRE-TERM resistor. The BQ24041 does not terminate charge, however, the $\overline{CHG}$ terminal will turn off once the battery current reaches 10% of the programmed charge current.

The charge terminal is high impedance in sleep mode and OVP (if $\overline{PG}$ is high impedance) and return to its previous state once the condition is removed.

Cycling input power, pulling the TS terminal low and releasing or entering pre-charge mode causes the $\overline{CHG}$ terminal to go reset (go low if power is good and a discharged battery is attached) and is considered the start of a first charge.

8.4 Device Functional Modes

8.4.1 $\overline{CHG}$ and $\overline{PG}$ LED Pull-up Source

For host monitoring, a pullup resistor is used between the STATUS terminal and the V_{CC} of the host and for a visual indication a resistor in series with an LED is connected between the STATUS terminal and a power source. If the $\overline{CHG}$ or $\overline{PG}$ source is capable of exceeding 7V, a 6.2V Zener should be used to clamp the voltage. If the source is the OUT terminal, note that as the battery changes voltage, and the brightness of the LEDs vary.

表 8-1.

CHARGING STATE	$\overline{CHG}$ FET/LED
First charge after VIN applied	ON
Refresh charge	OFF
OVP	
SLEEP	
TEMP FAULT	ON for 1st Charge

表 8-2.

V_{IN} POWER GOOD STATE	$\overline{PG}$ FET/LED
UVLO	OFF
SLEEP mode	
OVP mode	
Normal input (V_{OUT} + V_{DT} < V_{IN} < V_{OUP})	ON
PG is independent of chip disable	

8.4.2 Auto Start-up (BQ24041)

The auto start-up feature is an OR gate with two inputs; an internal power good signal (logic 1 when V_{IN}>V_{BAT} + $V_{IN\text{-}DT}$) and an external input from ASI terminal (internal 100kΩ pull-down). The ASO terminal outputs a signal that can be used as a system boot signal. The OR gate is powered by the OUT terminal and the OUT terminal must be powered by an external source (battery or P/S) or via the IN terminal for the ASO terminal to deliver a logic High. The ASI and/or the internal power good signal have to be logic high for the ASO to be logic high. The ASI/ASO, OUT and PG signals are used in production testing to test the system without a battery.

8.4.3 IN-DPM (V_{IN}-DPM or IN-DPM)

The IN-DPM feature is used to detect an input source voltage that is folding back (voltage dropping), reaching its current limit due to excessive load. When the input voltage drops to the $V_{IN\text{-}DPM}$ threshold the internal pass FET

Copyright © 2023 Texas Instruments Incorporated

starts to reduce the current until there is no further drop in voltage at the input. This would prevent a source with voltage less than $V_{IN\text{-}DPM}$ to power the out terminal. This works well with current limited adaptors and USB ports as long as the nominal voltage is above 4.3V and 4.4V respectively. This is an added safety feature that helps protect the source from excessive loads.

8.4.4 OUT

The Charger's OUT terminal provides current to the battery and to the system, if present. This IC can be used to charge the battery plus power the system, charge just the battery or just power the system (TTDM) assuming the loads do not exceed the available current. The OUT terminal is a current limited source and is inherently protected against shorts. If the system load ever exceeds the output programmed current threshold, the output will be discharged unless there is sufficient capacitance or a charged battery present to supplement the excessive load.

8.4.5 ISET

An external resistor is used to Program the Output Current (50 to 1000mA) and can be used as a current monitor.

$$R_{ISET} = K_{ISET} / I_{OUT} \quad (1)$$

where

- I_{OUT} is the desired fast charge current;
- K_{ISET} is a gain factor found in the electrical specification

For greater accuracy at lower currents, part of the sense FET is disabled to give better resolution. 図 7-1 shows the transition from low current to higher current. Going from higher currents to low currents, there is hysteresis and the transition occurs around 0.15A.

The ISET resistor is short protected and will detect a resistance lower than ≠340Ω. The detection requires at least 80mA of output current. If a "short" is detected, then the IC will latch off and can only be reset by cycling the power. The OUT current is internally clamped to a maximum current between 1.05A and 1.4A and is independent of the ISET short detection circuitry, as shown in 図 8-5. Also, see 図 9-14 and 図 9-15.

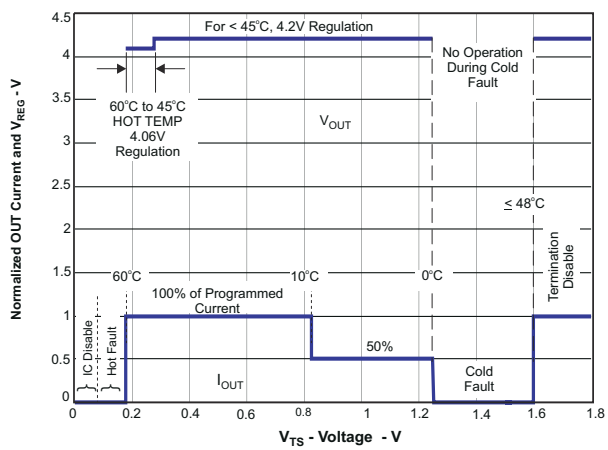

図 8-4. Operation Over TS Bias Voltage (BQ24040)

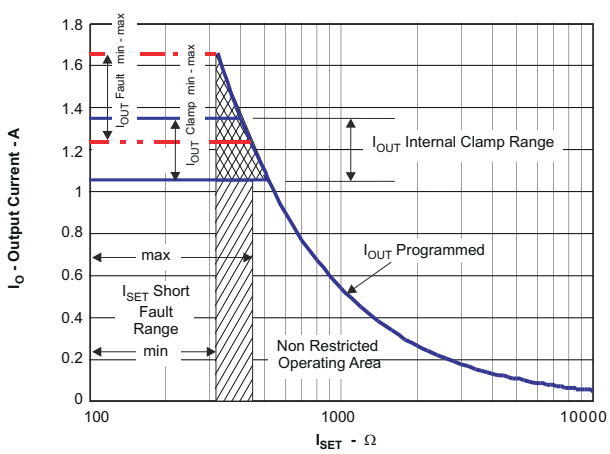

図 8-5. Programmed/Clamped Out Current (BQ24040)

8.4.6 PRE_TERM – Pre-Charge and Termination Programmable Threshold, BQ24040/5

Pre-Term is used to program both the pre-charge current and the termination current threshold. The pre-charge current level is a factor of two higher than the termination current level. The termination can be set between 5 and 50% of the programmed output current level set by ISET. If left floating the termination and pre-charge are set internally at 10/20% respectively. The pre-charge-to-fast-charge, V_{lowv} threshold is set to 2.5V.

$$R_{PRE\text{-}TERM} = \%Term \times K_{TERM} = \%Pre\text{-}CHG \times K_{PRE\text{-}CHG} \quad (2)$$

where

- %Term is the percent of fast charge current where termination occurs;
- %Pre-CHG is the percent of fast charge current that is desired during precharge;
- K_{TERM} and $K_{PRE\text{-}CHG}$ are gain factors found in the electrical specifications.

8.4.7 ISET2

ISET2 is a 3-state input and programs the Input Current Limit/Regulation Threshold. A low will program a regulated fast charge current via the ISET resistor and is the maximum allowed input/output current for any ISET2 setting, Float will program a 100mA Current limit and High will program a 500mA Current limit.

Below are two configurations for driving the 3-state ISET2 terminal:

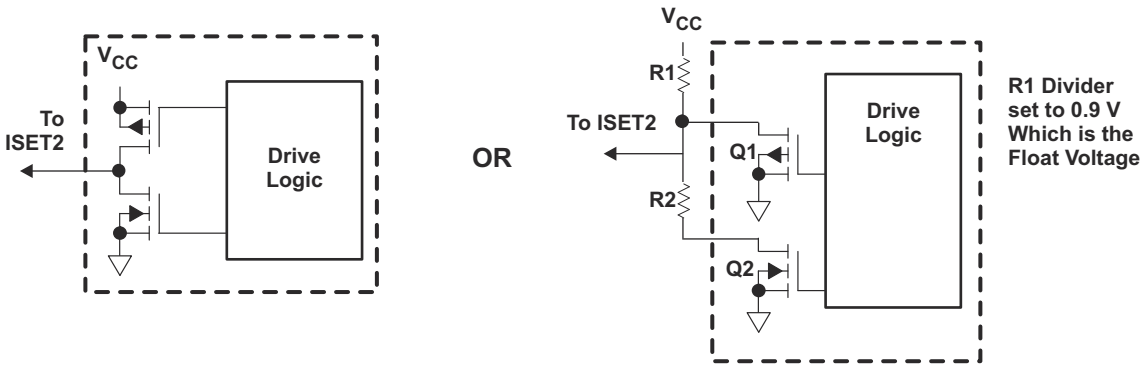

図 8-6. 3-State ISET2 Terminal Circuits

8.4.8 TS (BQ24040/5)

The TS function for the BQ24040/5 is designed to follow the new JEITA temperature standard for Li-Ion and Li-Pol batteries. There are now four thresholds, 60°C, 45°C, 10°C, and 0°C. Normal operation occurs between 10°C and 45°C. If between 0°C and 10°C the charge current level is cut in half and if between 45°C and 60°C the regulation voltage is reduced to 4.1Vmax, see 図 8-4.

The TS feature is implemented using an internal 50µA current source to bias the thermistor (designed for use with a 10k NTC β = 3370 (SEMITEC 103AT-2 or Mitsubishi TH05-3H103F) connected from the TS terminal to V_{SS}. If this feature is not needed, a fixed 10kΩ can be placed between TS and V_{SS} to allow normal operation. This may be done if the host is monitoring the thermistor and then the host would determine when to pull the TS terminal low to disable charge.

The TS terminal has two additional features, when the TS terminal is pulled low or floated/driven high. A low disables charge (similar to a high on the $\overline{BAT_EN}$ feature) and a high puts the charger in TTDM.

Above 60°C or below 0°C the charge is disabled. Once the thermistor reaches ≠–10°C the TS current folds back to keep a cold thermistor (between –10°C and –50°C) from placing the IC in the TTDM mode. If the TS terminal is pulled low into disable mode, the current is reduce to ≠30µA, see 図 8-2. Since the I_{TS} curent is fixed along with the temperature thresholds, it is not possible to use thermistor values other than the 10k NTC (at 25°C).

Copyright © 2023 Texas Instruments Incorporated

8.4.9 Termination and Timer Disable Mode (TTDM) - TS Terminal High

The battery charger is in TTDM when the TS terminal goes high from removing the thermistor (removing battery pack/floating the TS terminal) or by pulling the TS terminal up to the TTDM threshold.

When entering TTDM, the 10 hour safety timer is held in reset and termination is disabled. A battery detect routine is run to see if the battery was removed or not. If the battery was removed then the $\overline{CHG}$ terminal will go to its high impedance state if not already there. If a battery is detected the $\overline{CHG}$ terminal does not change states until the current tapers to the termination threshold, where the $\overline{CHG}$ terminal goes to its high impedance state if not already there (the regulated output will remain on).

The charging profile does not change (still has pre-charge, fast-charge constant current and constant voltage modes). This implies the battery is still charged safely and the current is allowed to taper to zero.

When coming out of TTDM, the battery detect routine is run and if a battery is detected, then a new charge cycle begins and the $\overline{CHG}$ LED turns on.

If TTDM is not desired upon removing the battery with the thermistor, one can add a 237k resistor between TS and V_{SS} to disable TTDM. This keeps the current source from driving the TS terminal into TTDM. This creates ≠0.1°C error at hot and a ≠3°C error at cold.

8.4.10 Timers, BQ24040 and BQ24045 only

The pre-charge timer is set to 30 minutes. The pre-charge current, can be programmed to off-set any system load, making sure that the 30 minutes is adequate. The BQ24041 does not have a safety timer.

The fast charge timer is fixed at 10 hours and can be increased real time by going into thermal regulation, IN-DPM or if in USB current limit. The timer clock slows by a factor of 2, resulting in a clock than counts half as fast when in these modes. If either the 30 minute or ten hour timer times out, the charging is terminated and the $\overline{CHG}$ terminal goes high impedance if not already in that state. The timer is reset by disabling the IC, cycling power or going into and out of TTDM.

8.4.11 Termination

Once the OUT terminal goes above VRCH, (reaches voltage regulation) and the current tapers down to the termination threshold, the $\overline{CHG}$ terminal goes high impedance and a battery detect route is run to determine if the battery was removed or the battery is full. If the battery is present, the charge current will terminate. If the battery was removed along with the thermistor, then the TS terminal is driven high and the charge enters TTDM. If the battery was removed and the TS terminal is held in the active region, then the battery detect routine will continue until a battery is inserted.

8.4.12 Battery Detect Routine

The battery detect routine should check for a missing battery while keeping the OUT terminal at a useable voltage. Whenever the battery is missing the $\overline{CHG}$ terminal should be high impedance.

The battery detect routine is run when entering and exiting TTDM to verify if battery is present, or run all the time if battery is missing and not in TTDM. On power-up, if battery voltage is greater than V_{RCH} threshold, a battery detect routine is run to determine if a battery is present.

The battery detect routine is disabled while the IC is in TTDM, or has a TS fault. See 図 8-7 for the Battery Detect Flow Diagram.

8.4.13 Refresh Threshold

After termination, if the OUT terminal voltage drops to V_{RCH} (100mV below regulation) then a new charge is initiated, but the $\overline{CHG}$ terminal remains at a high impedance (off).

8.4.14 Starting a Charge on a Full Battery

The termination threshold is raised by ≠14%, for the first minute of a charge cycle so if a full battery is removed and reinserted or a new charge cycle is initiated, that the new charge terminates (less than 1 minute). Batteries

that have relaxed many hours may take several minutes to taper to the termination threshold and terminate charge.

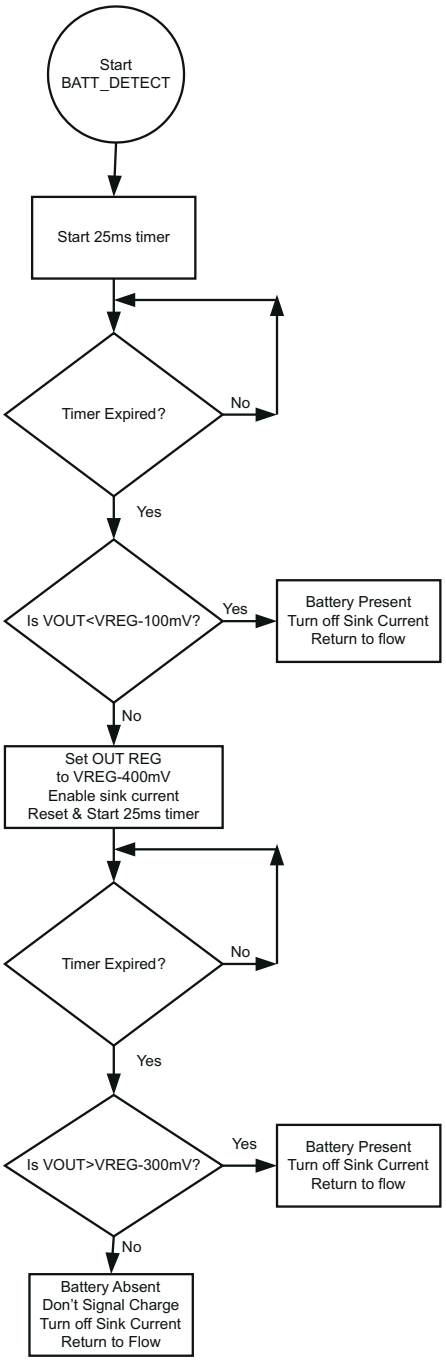

図 8-7. Battery Detect Routine (BQ24040)

Copyright © 2023 Texas Instruments Incorporated

9 Application and Implementation

注

Information in the following applications sections is not part of the TI component specification, and TI does not warrant its accuracy or completeness. TI's customers are responsible for determining suitability of components for their purposes. Customers should validate and test their design implementation to confirm system functionality.

9.1 Application Information

The BQ2404x series of devices are highly integrated Li-Ion and Li-Pol linear chargers devices targeted at space-limited portable applications. The devices operate from either a USB port or AC adapter. The high input voltage range with input overvoltage protection supports low-cost unregulated adapters. These devices have a single power output that charges the battery. A system load can be placed in parallel with the battery as long as the average system load does not keep the battery from charging fully during the 10 hour safety timer.

9.2 Typical Applications

9.2.1 Typical Application: BQ24040 and BQ24045

$I_{OUT_FAST_CHG}$ = 540mA; $I_{OUT_PRE_CHG}$ = 108mA; I_{OUT_TERM} = 54mA

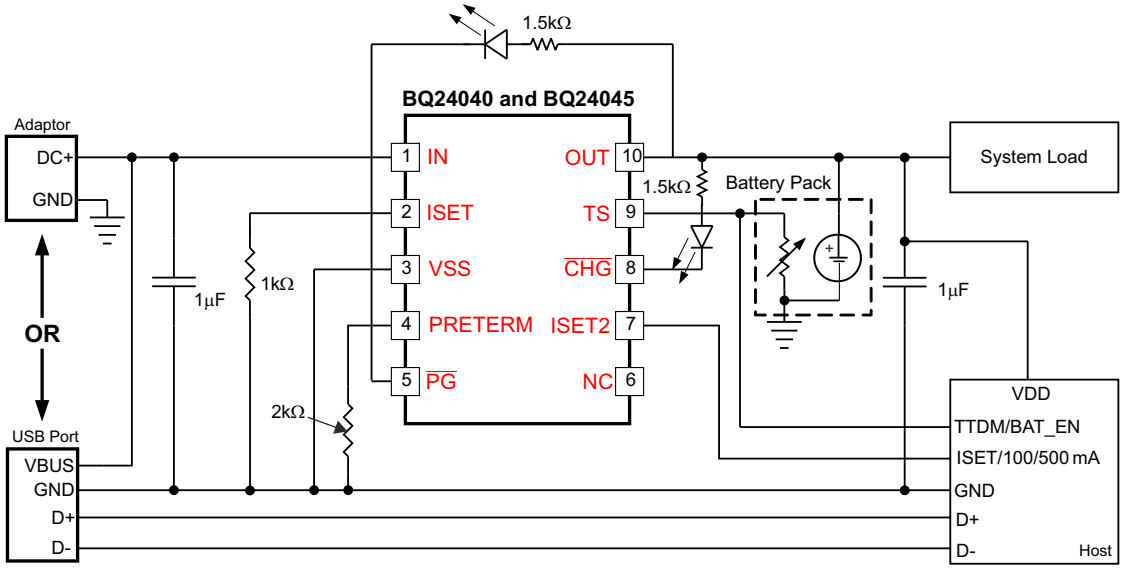

図 9-1. Typical Application Circuit: BQ24040 and BQ24045

9.2.1.1 Design Requirements

- Supply voltage = 5 V
- Fast charge current: $I_{OUT\text{-}FC}$ = 540 mA; ISET-terminal 2
- Termination Current Threshold: $\%_{IOUT\text{-}FC}$ = 10% of Fast Charge or about 54mA
- Pre-Charge Current by default is twice the termination Current or about 108mA
- TS – Battery Temperature Sense = 10k NTC (103AT)

9.2.1.2 Detailed Design Procedure

9.2.1.2.1 Calculations

For additional information on calculations, refer to *BQ24040 Application Report*.

9.2.1.2.1.1 Program the Fast Charge Current, ISET:

$$R_{ISET} = [K_{(ISET)} / I_{(OUT)}] \quad (3)$$

From セクション 7.5:

- $K_{(SET)}$ = 540AΩ
- R_{ISET} = [540AΩ/0.54A] = 1.0 kΩ

Selecting the closest standard value, use a 1.0 kΩ resistor between ISET (terminal 16) and VSS.

9.2.1.2.1.2 Program the Termination Current Threshold, ITERM:

$$R_{PRE\text{-}TERM} = K_{(TERM)} \times \%_{IOUT\text{-}FC} \quad (4)$$

$$R_{PRE\text{-}TERM} = 200\Omega/\% \times 10\% = 2k\Omega \quad (5)$$

Selecting the closest standard value, use a 2 kΩ resistor between ITERM (terminal 15) and VSS.

One can arrive at the same value by using 20% for a pre-charge value (factor of 2 difference).

$$R_{PRE\text{-}TERM} = K_{(PRE\text{-}CHG)} \times \%_{IOUT\text{-}FC} \quad (6)$$

$$R_{PRE\text{-}TERM} = 100\Omega/\% \times 20\% = 2k\Omega \quad (7)$$

9.2.1.2.1.3 TS Function (BQ24040)

Use a 10k NTC thermistor in the battery pack (103AT).

To Disable the temp sense function, use a fixed 10k resistor between the TS (terminal 1) and VSS.

9.2.1.2.1.4 $\overline{CHG}$ and PG

LED Status: connect a 1.5k resistor in series with a LED between the OUT terminal and the $\overline{CHG}$ terminal. Connect a 1.5k resistor in series with a LED between the OUT terminal and the and PG terminal.

Processor Monitoring: Connect a pull-up resistor between the processor's power rail and the $\overline{CHG}$ terminal. Connect a pull-up resistor between the processor's power rail and the PG terminal.

9.2.1.2.2 Selecting In and Out Terminal Capacitors

In most applications, all that is needed is a high-frequency decoupling capacitor (ceramic) on the power terminal, input and output terminals. Using the values shown on the application diagram, is recommended. After evaluation of these voltage signals with real system operational conditions, one can determine if capacitance values can be adjusted toward the minimum recommended values (DC load application) or higher values for fast high amplitude pulsed load applications. Note if designed for high input voltage sources (bad adaptors or wrong adaptors), the capacitor needs to be rated appropriately. Ceramic capacitors are tested to 2x their rated values so a 16V capacitor may be adequate for a 30V transient (verify tested rating with capacitor manufacturer).

Copyright © 2023 Texas Instruments Incorporated

9.2.1.3 Application Curves

SETUP: BQ24040 typical applications schematic; V_{IN} = 5V, V_{BAT} = 3.6V (unless otherwise indicated)

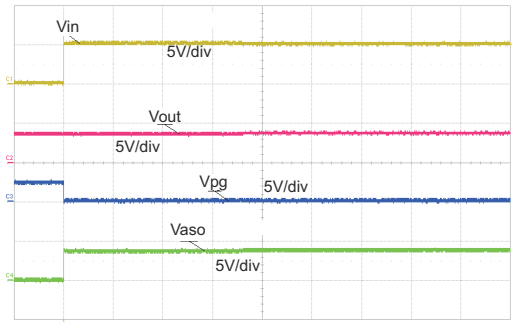

t - time - 10ms/div

図 9-2. Power-up Timing

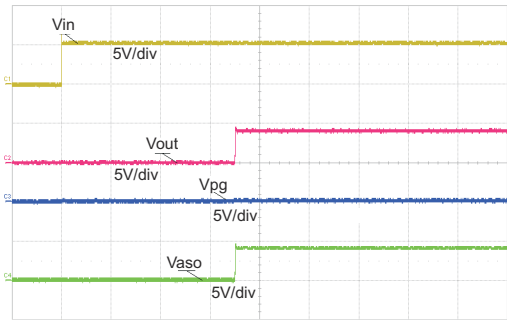

t - time - 10ms/div

図 9-3. Power-up Timing – No Battery or Load

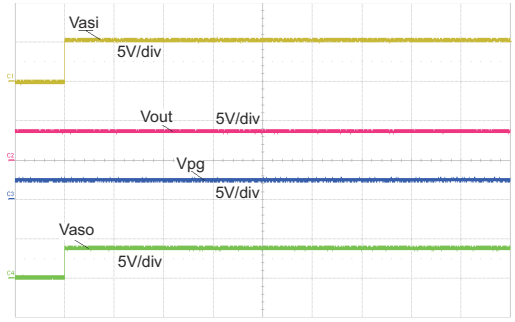

t - time - 20ms/div

図 9-4. – ASI and OUT Power-up Timing – No Input

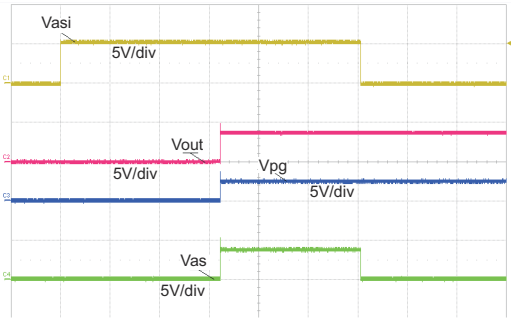

t - time - 50ms/div

図 9-5. ASI and delayed OUT Power-up Timing – No Input

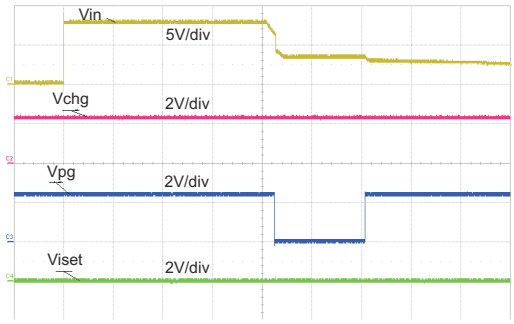

t - time - 20ms/div

図 9-6. OVP 8V Adaptor - Hot Plug

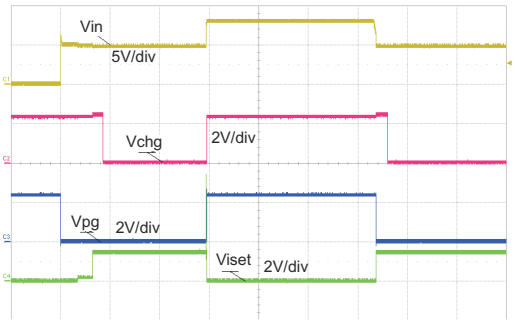

t - time - 100ms/div

図 9-7. OVP from Normal Power-up Operation – V_{IN} 0V → 5V → 8V →5V

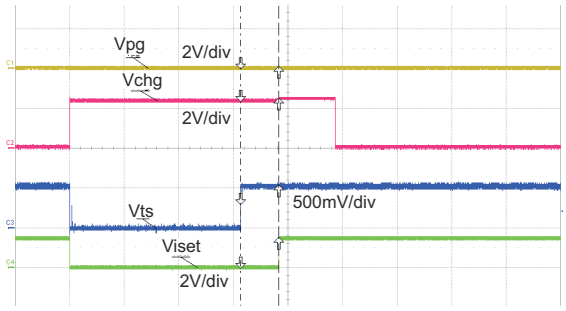

t - time - 50ms/div

10kΩ resistor from TS to GND. 10kΩ is shorted to disable the IC

.

図 9-8. TS Enable and Disable

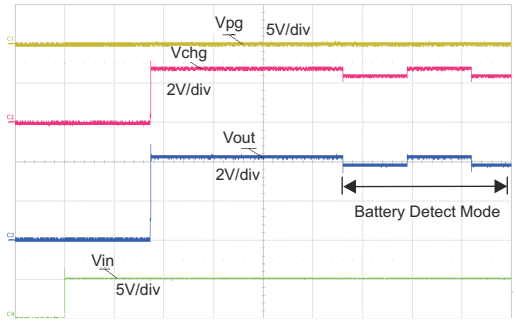

t - time - 20ms/div

図 9-9. Hot Plug Source w/No Battery – Battery Detection

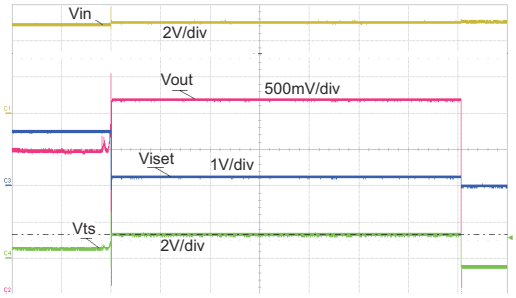

t - time - 5ms/div

図 9-10. Battery Removal – GND Removed 1st, 42 Ω Load

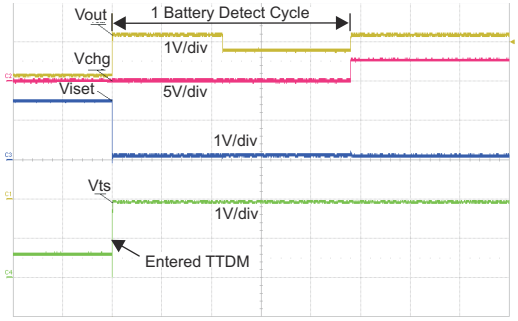

t - time - 10ms/div

図 9-11. Battery Removal with OUT and TS Disconnect 1st, With 100 Ω Load

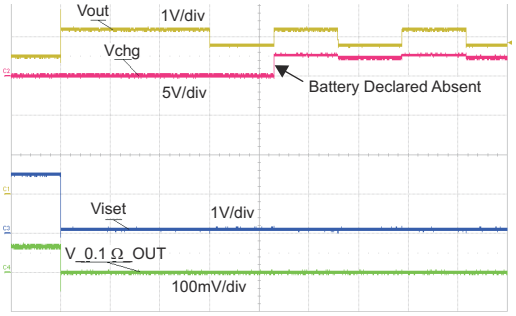

t - time - 20ms/div

Continuous battery detection when not in TTDM

図 9-12. Battery Removal with fixed TS = 0.5V

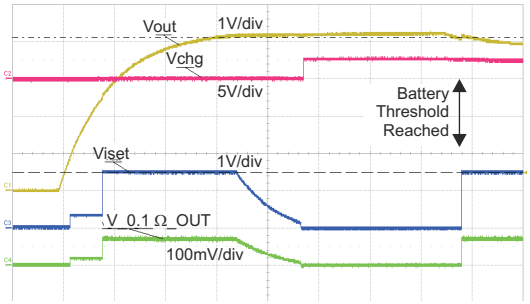

t - time - 500ms/div

CH4: I_{OUT} (1A/Div)

Battery voltage swept from 0V to 4.25V to 3.9V.

図 9-13. Battery Charge Profile

Copyright © 2023 Texas Instruments Incorporated

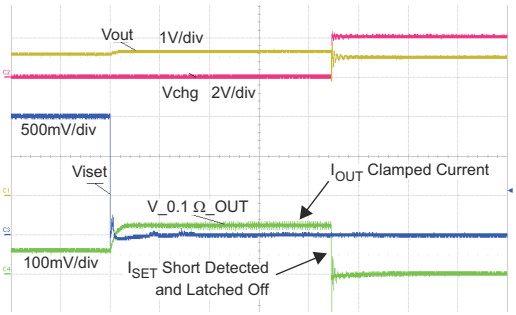

t - time - 200µs/div

CH4: I_{OUT} (1A/Div)

図 9-14. ISET Shorted During Normal Operation

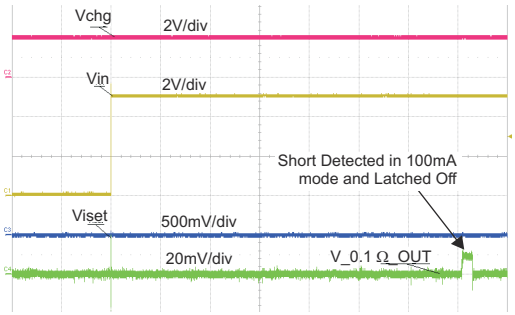

t - time - 5ms/div

CH4: I_{OUT} (0.2A/Div)

図 9-15. ISET Shorted Prior to USB Power-up

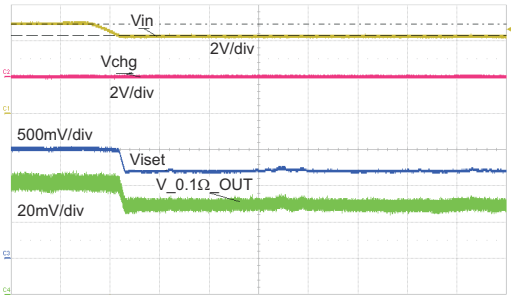

t - time - 1ms/div

CH4: I_{OUT} (0.2A/Div)

図 9-16. DPM – Adaptor Current Limits – Vin Regulated

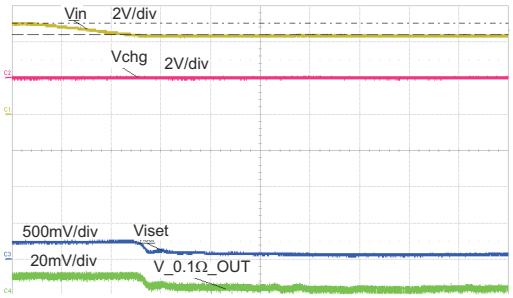

t - time - 500µs/div

図 9-17. DPM – USB Current Limits – Vin Regulated to 4.4V

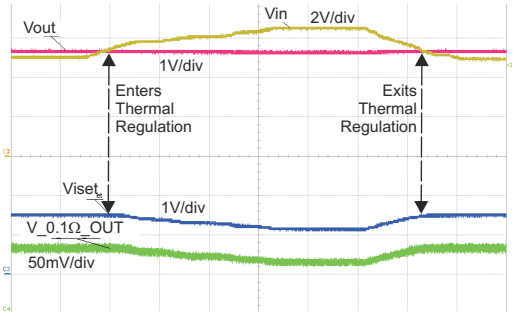

t - time - 1s/div

The IC temperature rises to 125°C and enters thermal regulation. Charge current is reduced to regulate the IC at 125°C. VIN is reduced, the IC temperature drops, the charge current returns to the programmed value

.

図 9-18. Thermal Reg. – Vin increases PWR/Iout Reduced

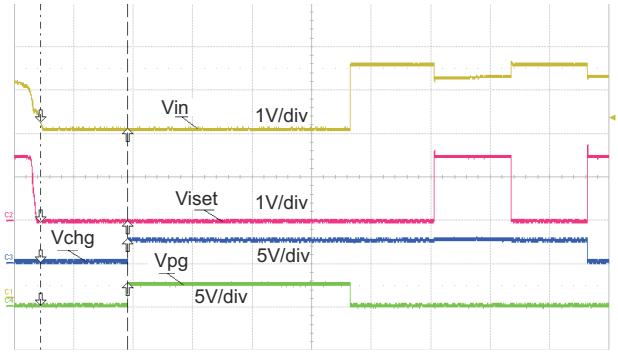

t - time - 20ms/div

V_{IN} swept from 5V to 3.9V to 5V

V_{BAT} = 4V

図 9-19. Entering and Exiting Sleep mode

9.2.2 Typical Application Circuit: BQ24041, with ASI and ASO

$I_{OUT_FAST_CHG}$ = 540mA; $I_{OUT_PRE_CHG}$ = 108mA

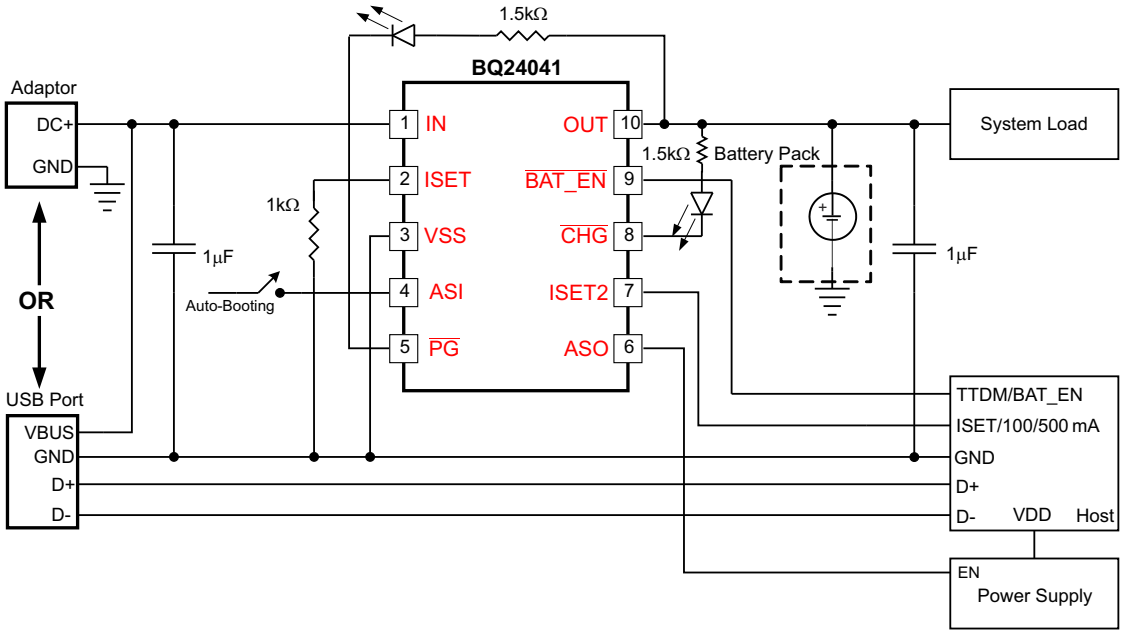

図 9-20. Typical Application Circuit: BQ24041, with ASI and ASO

9.2.2.1 Design Requirements

See *セクション 9.2.1* for design requirements.

9.2.2.2 Detailed Design Procedure

See *セクション 9.2.1* for detailed design procedures.

Copyright © 2023 Texas Instruments Incorporated

9.2.2.3 Application Curves

SETUP: BQ24041 typical applications schematic; V_{IN} = 5V, V_{BAT} = 3.6V (unless otherwise indicated)

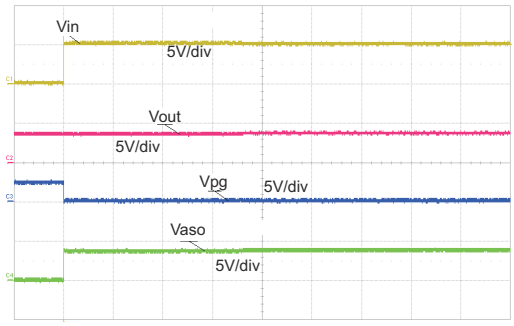

図 9-21. Power-up Timing, BQ24041

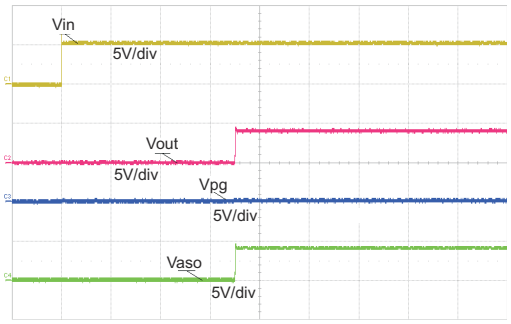

図 9-22. Power-up Timing – No Battery or Load, BQ24041

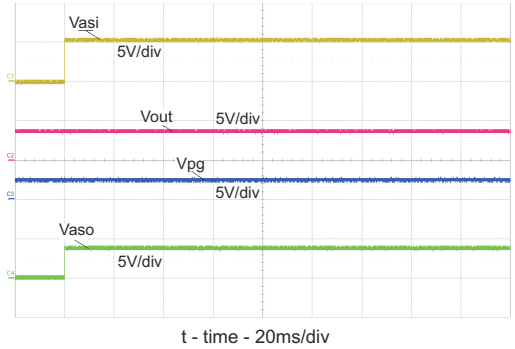

図 9-23. – ASI and OUT Power-up Timing – No Input, BQ24041

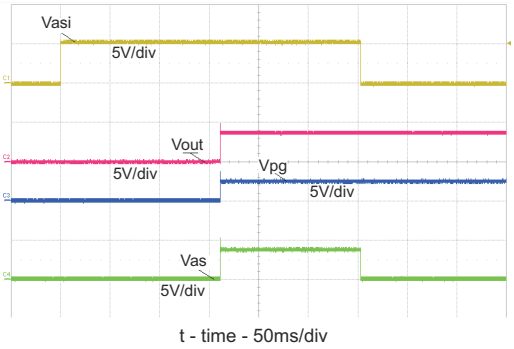

図 9-24. ASI and Delayed OUT Power-up Timing – No Input, BQ24041

10 Power Supply Recommendations

The devices are designed to operate from an input voltage supply range between 3.5 V and 28 V and current capability of at least the maximum designed charge current. This input supply should be well regulated. If located more than a few inches from the BQ24040x IN and GND terminals, a larger capacitor is recommended.

Copyright © 2023 Texas Instruments Incorporated

11 Layout

11.1 Layout Guidelines

To obtain optimal performance, the decoupling capacitor from IN to GND (thermal pad) and the output filter capacitors from OUT to GND (thermal pad) should be placed as close as possible to the BQ2405x, with short trace runs to both IN, OUT, and GND (thermal pad).

- All low-current GND connections should be kept separate from the high-current charge or discharge paths from the battery. Use a single-point ground technique incorporating both the small signal ground path and the power ground path.
- The high current charge paths into IN terminal and from the OUT terminal must be sized appropriately for the maximum charge current in order to avoid voltage drops in these traces
- The BQ2404x family is packaged in a thermally enhanced MLP package. The package includes a thermal pad to provide an effective thermal contact between the IC and the printed circuit board (PCB); this thermal pad is also the main ground connection for the device. Connect the thermal pad to the PCB ground connection. It is best to use multiple 10mil vias in the power pad of the IC and close enough to conduct the heat to the bottom ground plane. The bottom ground plane should avoid traces that “cut off” the thermal path. The thinner the PCB the less temperature rise. The EVM PCB has a thickness of 0.031 inches and uses 2 oz. (2.8mil thick) copper on top and bottom, and is a good example of optimal thermal performance.

11.2 Layout Example

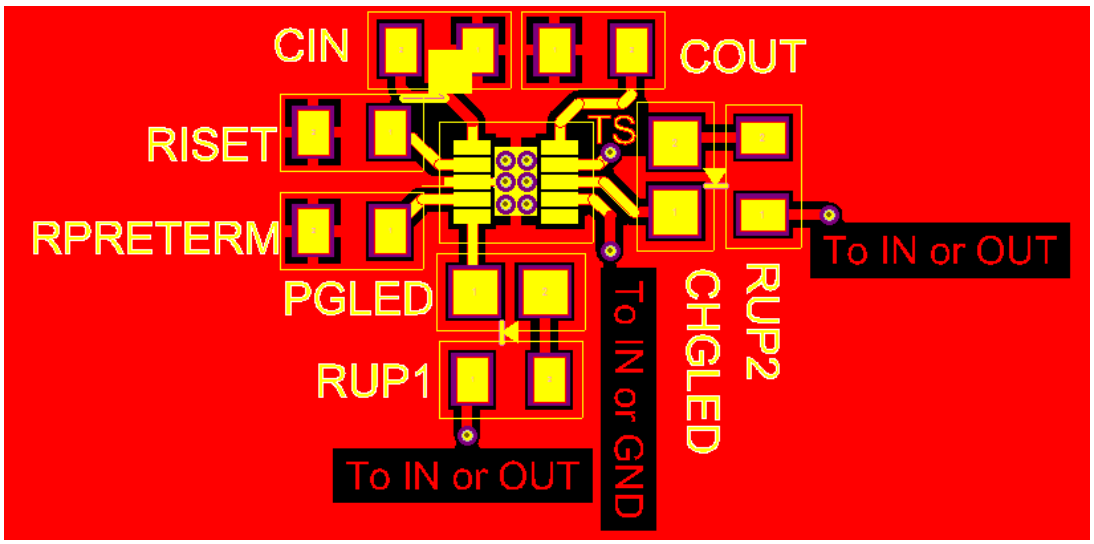

図 11-1. Board Layout

11.3 Thermal Considerations

The BQ2404x family is packaged in a thermally enhanced MLP package. The package includes a thermal pad to provide an effective thermal contact between the IC and the printed circuit board (PCB). The power pad should be directly connected to the VSS terminal. Full PCB design guidelines for this package are provided in the application note entitled: *QFN/SON PCB Attachment Application Report*. The most common measure of package thermal performance is thermal impedance ($R_{\theta JA}$) measured (or modeled) from the chip junction to the air surrounding the package surface (ambient). The mathematical expression for $R_{\theta JA}$ is:

$$R_{\theta JA} = (T_J – T) / P \quad (8)$$

where

- T_J = Chip junction temperature
- T = Ambient temperature
- P = Device power dissipation

Factors that can influence the measurement and calculation of $R_{\theta JA}$ include:

1. Whether or not the device is board mounted
2. Trace size, composition, thickness, and geometry
3. Orientation of the device (horizontal or vertical)
4. Volume of the ambient air surrounding the device under test and airflow
5. Whether other surfaces are in close proximity to the device being tested

Due to the charge profile of Li-Ion and Li-Pol batteries the maximum power dissipation is typically seen at the beginning of the charge cycle when the battery voltage is at its lowest. Typically after fast charge begins the pack voltage increases to ≠3.4V within the first 2 minutes. The thermal time constant of the assembly typically takes a few minutes to heat up so when doing maximum power dissipation calculations, 3.4V is a good minimum voltage to use. This is verified, with the system and a fully discharged battery, by plotting temperature on the bottom of the PCB under the IC (pad should have multiple vias), the charge current and the battery voltage as a function of time. The fast charge current will start to taper off if the part goes into thermal regulation.

The device power dissipation, P, is a function of the charge rate and the voltage drop across the internal PowerFET. It can be calculated from the following equation when a battery pack is being charged:

$$P = [V_{(IN)} – V_{(OUT)}] \times I_{(OUT)} + [V_{(OUT)} – V_{(BAT)}] \times I_{(BAT)} \quad (9)$$

The thermal loop feature reduces the charge current to limit excessive IC junction temperature. It is recommended that the design not run in thermal regulation for typical operating conditions (nominal input voltage and nominal ambient temperatures) and use the feature for non typical situations such as hot environments or higher than normal input source voltage. With that said, the IC will still perform as described, if the thermal loop is always active.

11.3.1 Leakage Current Effects on Battery Capacity

To determine how fast a leakage current on the battery will discharge the battery is an easy calculation. The time from full to discharge can be calculated by dividing the Amp-Hour Capacity of the battery by the leakage current. For a 0.75AHr battery and a 10µA leakage current (750 mAHr / 0.010 mA = 75000 hours), it would take 75k hours or 8.8 years to discharge. In reality the self discharge of the cell would be much faster so the 10µA leakage would be considered negligible.

Copyright © 2023 Texas Instruments Incorporated

12 Device and Documentation Support

12.1 Device Support

12.1.1 サード・パーティ製品に関する免責事項

サード・パーティ製品またはサービスに関するテキサス・インスツルメンツの出版物は、単独またはテキサス・インスツルメンツの製品、サービスと一緒に提供される場合に関係なく、サード・パーティ製品またはサービスの適合性に関する是認、サード・パーティ製品またはサービスの是認の表明を意味するものではありません。

12.2 Documentation Support

12.2.1 Related Documentation

For related documentation see the following:

- *BQ24040 Pin FMA Application Report*
- *BQ2404x FIT Rate Application Report*
- *BQ24040 Application Report*
- *QFN/SON PCB Attachment Application Report*

12.3 ドキュメントの更新通知を受け取る方法

ドキュメントの更新についての通知を受け取るには、ti.com のデバイス製品フォルダを開いてください。*「更新の通知を受け取る」をクリック*して登録すると、変更されたすべての製品情報に関するダイジェストを毎週受け取れます。変更の詳細については、修正されたドキュメントに含まれている改訂履歴をご覧ください。

12.4 サポート・リソース

TI E2E™ サポート・フォーラムは、エンジニアが検証済みの回答と設計に関するヒントをエキスパートから迅速かつ直接得ることができる場所です。既存の回答を検索したり、独自の質問をしたりすることで、設計で必要な支援を迅速に得ることができます。

リンクされているコンテンツは、該当する貢献者により、現状のまま提供されるものです。これらは TI の仕様を構成するものではなく、必ずしも TI の見解を反映したものではありません。TI の使用条件を参照してください。

12.5 Trademarks

TI E2E™ is a trademark of Texas Instruments.
すべての商標は、それぞれの所有者に帰属します。

12.6 静電気放電に関する注意事項

この IC は、ESD によって破損する可能性があります。テキサス・インスツルメンツは、IC を取り扱う際には常に適切な注意を払うことを推奨します。正しい ESD 対策をとらないと、デバイスを破損するおそれがあります。

ESD による破損は、わずかな性能低下からデバイスの完全な故障まで多岐にわたります。精密な IC の場合、パラメータがわずかに変化するだけで公表されている仕様から外れる可能性があるため、破損が発生しやすくなっています。

12.7 用語集

TI 用語集　　この用語集には、用語や略語の一覧および定義が記載されています。

13 Mechanical, Packaging, and Orderable Information

The following pages include mechanical packaging and orderable information. This information is the most current data available for the designated devices. This data is subject to change without notice and revision of this document. For browser-based versions of this data sheet, refer to the left-hand navigation.

PACKAGING INFORMATION

Orderable part number	Status (1)	Material type (2)	Package | Pins	Package qty | Carrier	RoHS (3)	Lead finish/ Ball material (4)	MSL rating/ Peak reflow (5)	Op temp (°C)	Part marking (6)
BQ24040DSQR	Active	Production	WSON (DSQ) | 10	3000 | LARGE T&R	Yes	NIPDAU | NIPDAUAG	Level-2-260C-1 YEAR	0 to 125	NXE
BQ24040DSQR.A	Active	Production	WSON (DSQ) | 10	3000 | LARGE T&R	Yes	NIPDAU	Level-2-260C-1 YEAR	0 to 125	NXE
BQ24040DSQR.B	Active	Production	WSON (DSQ) | 10	3000 | LARGE T&R	Yes	NIPDAU	Level-2-260C-1 YEAR	0 to 125	NXE
BQ24040DSQRG4	Active	Production	WSON (DSQ) | 10	3000 | LARGE T&R	Yes	NIPDAU	Level-2-260C-1 YEAR	0 to 125	NXE
BQ24040DSQRG4.A	Active	Production	WSON (DSQ) | 10	3000 | LARGE T&R	Yes	NIPDAU	Level-2-260C-1 YEAR	0 to 125	NXE
BQ24040DSQRG4.B	Active	Production	WSON (DSQ) | 10	3000 | LARGE T&R	Yes	NIPDAU	Level-2-260C-1 YEAR	0 to 125	NXE
BQ24040DSQT	Active	Production	WSON (DSQ) | 10	250 | SMALL T&R	Yes	NIPDAU | NIPDAUAG	Level-2-260C-1 YEAR	0 to 125	NXE
BQ24040DSQT.A	Active	Production	WSON (DSQ) | 10	250 | SMALL T&R	Yes	NIPDAU	Level-2-260C-1 YEAR	0 to 125	NXE
BQ24040DSQT.B	Active	Production	WSON (DSQ) | 10	250 | SMALL T&R	Yes	NIPDAU	Level-2-260C-1 YEAR	0 to 125	NXE
BQ24041DSQR	Active	Production	WSON (DSQ) | 10	3000 | LARGE T&R	Yes	NIPDAUAG	Level-2-260C-1 YEAR	0 to 125	NXF
BQ24041DSQR.A	Active	Production	WSON (DSQ) | 10	3000 | LARGE T&R	Yes	NIPDAUAG	Level-2-260C-1 YEAR	0 to 125	NXF
BQ24041DSQR.B	Active	Production	WSON (DSQ) | 10	3000 | LARGE T&R	Yes	NIPDAUAG	Level-2-260C-1 YEAR	0 to 125	NXF
BQ24041DSQT	Active	Production	WSON (DSQ) | 10	250 | SMALL T&R	Yes	NIPDAUAG	Level-2-260C-1 YEAR	0 to 125	NXF
BQ24041DSQT.A	Active	Production	WSON (DSQ) | 10	250 | SMALL T&R	Yes	NIPDAUAG	Level-2-260C-1 YEAR	0 to 125	NXF
BQ24041DSQT.B	Active	Production	WSON (DSQ) | 10	250 | SMALL T&R	Yes	NIPDAUAG	Level-2-260C-1 YEAR	0 to 125	NXF
BQ24045DSQR	Active	Production	WSON (DSQ) | 10	3000 | LARGE T&R	Yes	NIPDAU	Level-2-260C-1 YEAR	0 to 125	SII
BQ24045DSQR.A	Active	Production	WSON (DSQ) | 10	3000 | LARGE T&R	Yes	NIPDAU	Level-2-260C-1 YEAR	0 to 125	SII
BQ24045DSQR.B	Active	Production	WSON (DSQ) | 10	3000 | LARGE T&R	Yes	NIPDAU	Level-2-260C-1 YEAR	0 to 125	SII
BQ24045DSQRG4	Active	Production	WSON (DSQ) | 10	3000 | LARGE T&R	Yes	NIPDAU	Level-2-260C-1 YEAR	0 to 125	SII
BQ24045DSQRG4.A	Active	Production	WSON (DSQ) | 10	3000 | LARGE T&R	Yes	NIPDAU	Level-2-260C-1 YEAR	0 to 125	SII
BQ24045DSQRG4.B	Active	Production	WSON (DSQ) | 10	3000 | LARGE T&R	Yes	NIPDAU	Level-2-260C-1 YEAR	0 to 125	SII
BQ24045DSQT	Active	Production	WSON (DSQ) | 10	250 | SMALL T&R	Yes	NIPDAU | NIPDAUAG	Level-2-260C-1 YEAR	0 to 125	SII
BQ24045DSQT.A	Active	Production	WSON (DSQ) | 10	250 | SMALL T&R	Yes	NIPDAU	Level-2-260C-1 YEAR	0 to 125	SII
BQ24045DSQT.B	Active	Production	WSON (DSQ) | 10	250 | SMALL T&R	Yes	NIPDAU	Level-2-260C-1 YEAR	0 to 125	SII

(1) **Status:** For more details on status, see our product life cycle.

(2) **Material type:** When designated, preproduction parts are prototypes/experimental devices, and are not yet approved or released for full production. Testing and final process, including without limitation quality assurance, reliability performance testing, and/or process qualification, may not yet be complete, and this item is subject to further changes or possible discontinuation. If available for ordering, purchases will be subject to an additional waiver at checkout, and are intended for early internal evaluation purposes only. These items are sold without warranties of any kind.

(3) **RoHS values:** Yes, No, RoHS Exempt. See the TI RoHS Statement for additional information and value definition.

(4) **Lead finish/Ball material:** Parts may have multiple material finish options. Finish options are separated by a vertical ruled line. Lead finish/Ball material values may wrap to two lines if the finish value exceeds the maximum column width.

(5) **MSL rating/Peak reflow:** The moisture sensitivity level ratings and peak solder (reflow) temperatures. In the event that a part has multiple moisture sensitivity ratings, only the lowest level per JEDEC standards is shown. Refer to the shipping label for the actual reflow temperature that will be used to mount the part to the printed circuit board.

(6) **Part marking:** There may be an additional marking, which relates to the logo, the lot trace code information, or the environmental category of the part.

Multiple part markings will be inside parentheses. Only one part marking contained in parentheses and separated by a "~" will appear on a part. If a line is indented then it is a continuation of the previous line and the two combined represent the entire part marking for that device.

Important Information and Disclaimer: The information provided on this page represents TI's knowledge and belief as of the date that it is provided. TI bases its knowledge and belief on information provided by third parties, and makes no representation or warranty as to the accuracy of such information. Efforts are underway to better integrate information from third parties. TI has taken and continues to take reasonable steps to provide representative and accurate information but may not have conducted destructive testing or chemical analysis on incoming materials and chemicals. TI and TI suppliers consider certain information to be proprietary, and thus CAS numbers and other limited information may not be available for release.

In no event shall TI's liability arising out of such information exceed the total purchase price of the TI part(s) at issue in this document sold by TI to Customer on an annual basis.

TAPE AND REEL INFORMATION

REEL DIMENSIONS

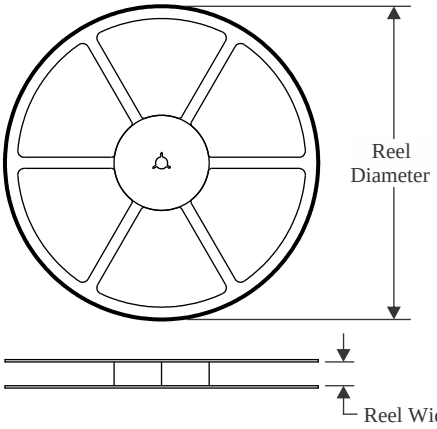

TAPE DIMENSIONS

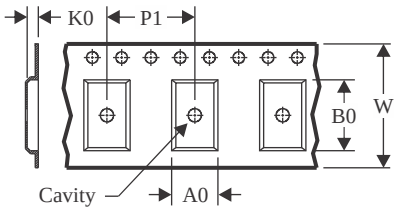

A0	Dimension designed to accommodate the component width
B0	Dimension designed to accommodate the component length
K0	Dimension designed to accommodate the component thickness
W	Overall width of the carrier tape
P1	Pitch between successive cavity centers

QUADRANT ASSIGNMENTS FOR PIN 1 ORIENTATION IN TAPE

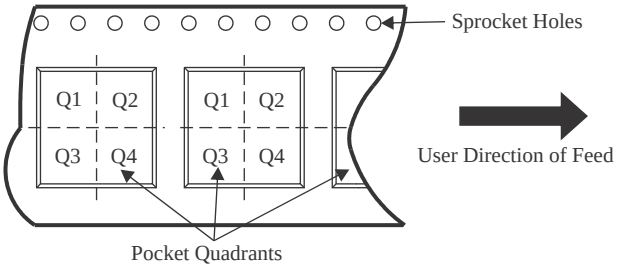

*All dimensions are nominal

Device	Package Type	Package Drawing	Pins	SPQ	Reel Diameter (mm)	Reel Width W1 (mm)	A0 (mm)	B0 (mm)	K0 (mm)	P1 (mm)	W (mm)	Pin1 Quadrant
BQ24040DSQR	WSON	DSQ	10	3000	180.0	8.4	2.3	2.3	1.15	4.0	8.0	Q2
BQ24040DSQRG4	WSON	DSQ	10	3000	180.0	8.4	2.3	2.3	1.15	4.0	8.0	Q2
BQ24040DSQT	WSON	DSQ	10	250	180.0	8.4	2.3	2.3	1.15	4.0	8.0	Q2
BQ24041DSQR	WSON	DSQ	10	3000	179.0	8.4	2.2	2.2	1.2	4.0	8.0	Q2
BQ24041DSQT	WSON	DSQ	10	250	179.0	8.4	2.2	2.2	1.2	4.0	8.0	Q2
BQ24045DSQR	WSON	DSQ	10	3000	178.0	8.4	2.3	2.3	1.15	4.0	8.0	Q2
BQ24045DSQRG4	WSON	DSQ	10	3000	180.0	8.4	2.3	2.3	1.15	4.0	8.0	Q2
BQ24045DSQT	WSON	DSQ	10	250	180.0	8.4	2.3	2.3	1.15	4.0	8.0	Q2

TAPE AND REEL BOX DIMENSIONS

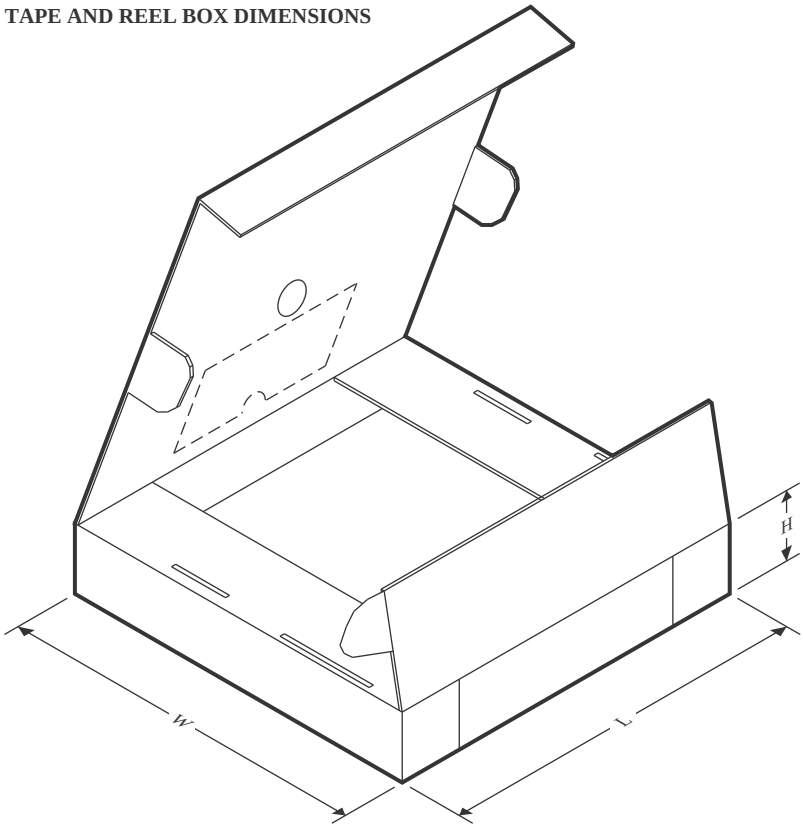

*All dimensions are nominal

Device	Package Type	Package Drawing	Pins	SPQ	Length (mm)	Width (mm)	Height (mm)
BQ24040DSQR	WSON	DSQ	10	3000	210.0	185.0	35.0
BQ24040DSQRG4	WSON	DSQ	10	3000	210.0	185.0	35.0
BQ24040DSQT	WSON	DSQ	10	250	210.0	185.0	35.0
BQ24041DSQR	WSON	DSQ	10	3000	213.0	191.0	35.0
BQ24041DSQT	WSON	DSQ	10	250	213.0	191.0	35.0
BQ24045DSQR	WSON	DSQ	10	3000	208.0	191.0	35.0
BQ24045DSQRG4	WSON	DSQ	10	3000	210.0	185.0	35.0
BQ24045DSQT	WSON	DSQ	10	250	210.0	185.0	35.0

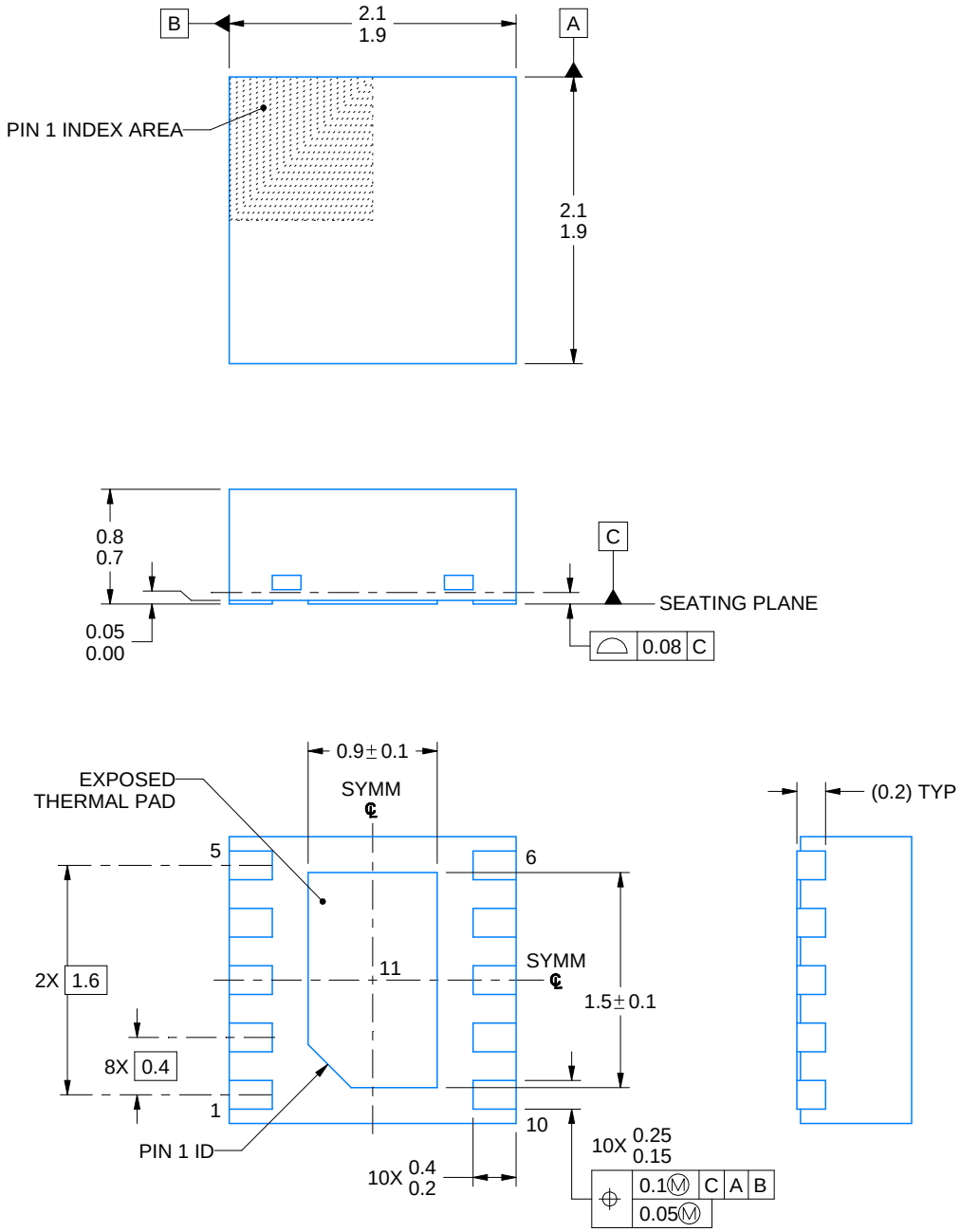

4218906/A 04/2019

NOTES:

1. All linear dimensions are in millimeters. Any dimensions in parenthesis are for reference only. Dimensioning and tolerancing per ASME Y14.5M.
2. This drawing is subject to change without notice.
3. The package thermal pad must be soldered to the printed circuit board for thermal and mechanical performance.

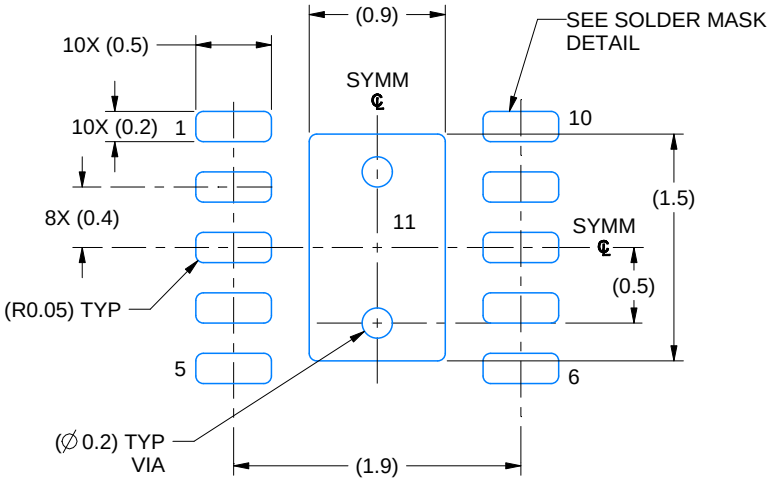

LAND PATTERN EXAMPLE
EXPOSED METAL SHOWN
SCALE: 20X

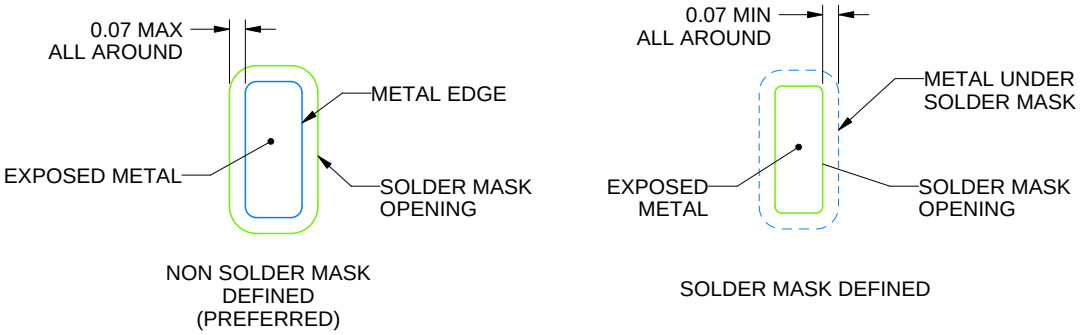

SOLDER MASK DETAILS

4218906/A 04/2019

NOTES: (continued)

4. This package is designed to be soldered to a thermal pad on the board. For more information, see Texas Instruments literature number SLUA271 (www.ti.com/lit/slua271).
5. Vias are optional depending on application, refer to device data sheet. If any vias are implemented, refer to their locations shown on this view. It is recommended that vias under paste be filled, plugged or tented.

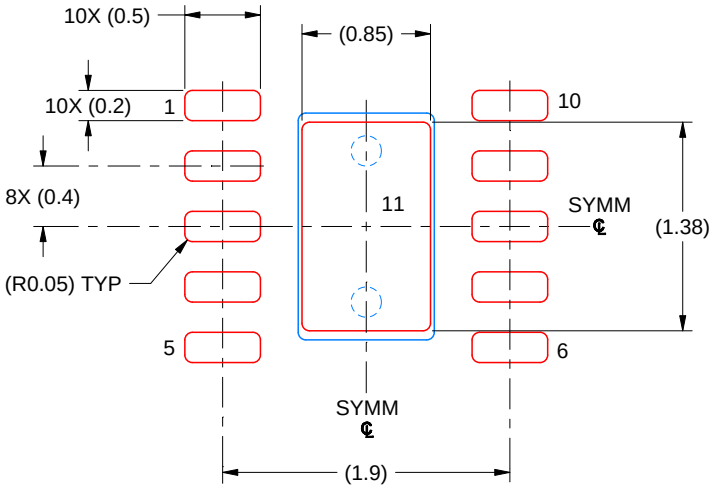

SOLDER PASTE EXAMPLE
BASED ON 0.125 MM THICK STENCIL
SCALE: 20X

EXPOSED PAD 11
87% PRINTED SOLDER COVERAGE BY AREA UNDER PACKAGE

4218906/A 04/2019

NOTES: (continued)

6. Laser cutting apertures with trapezoidal walls and rounded corners may offer better paste release. IPC-7525 may have alternate design recommendations.

重要なお知らせと免責事項

TI は、技術データと信頼性データ (データシートを含みます)、設計リソース (リファレンス デザインを含みます)、アプリケーションや設計に関する各種アドバイス、Web ツール、安全性情報、その他のリソースを、欠陥が存在する可能性のある「現状のまま」提供しており、商品性および特定目的に対する適合性の黙示保証、第三者の知的財産権の非侵害保証を含むいかなる保証も、明示的または黙示的にかかわらず拒否します。

これらのリソースは、TI 製品を使用する設計の経験を積んだ開発者への提供を意図したものです。(1) お客様のアプリケーションに適した TI 製品の選定、(2) お客様のアプリケーションの設計、検証、試験、(3) お客様のアプリケーションに該当する各種規格や、その他のあらゆる安全性、セキュリティ、規制、または他の要件への確実な適合に関する責任を、お客様のみが単独で負うものとします。

上記の各種リソースは、予告なく変更される可能性があります。これらのリソースは、リソースで説明されている TI 製品を使用するアプリケーションの開発の目的でのみ、TI はその使用をお客様に許諾します。これらのリソースに関して、他の目的で複製することや掲載することは禁止されています。TI や第三者の知的財産権のライセンスが付与されている訳ではありません。お客様は、これらのリソースを自身で使用した結果発生するあらゆる申し立て、損害、費用、損失、責任について、TI およびその代理人を完全に補償するものとし、TI は一切の責任を拒否します。

TI の製品は、 TI の販売条件 、 TI の総合的な品質ガイドライン 、 ti.com または TI 製品などに関連して提供される他の適用条件に従い提供されます。TI がこれらのリソースを提供することは、適用される TI の保証または他の保証の放棄の拡大や変更を意味するものではありません。 TI がカスタム、またはカスタマー仕様として明示的に指定していない限り、TI の製品は標準的なカタログに掲載される汎用機器です。

お客様がいかなる追加条項または代替条項を提案する場合も、TI はそれらに異議を唱え、拒否します。

Copyright © 2026, Texas Instruments Incorporated

最終更新日：2025 年 10 月