TEXAS INSTRUMENTS
CD54HC259, CD74HC259, CD54HCT259, CD74HCT259
JAJSND6D – NOVEMBER 1997 – REVISED NOVEMBER 2021

CDx4HC(T)259 ハイスピード SMOS ロジック 8 ビット・アドレス指定可能ラッチ

1 特長

- バッファ付き入力および出力
- 4 つの動作モード
- 15ns の伝搬遅延 (標準値、V_{CC} = 5V、C_L = 15pF、T_A = 25℃)
- ファンアウト (全温度範囲にわたって)
  - 標準出力:10 の LSTTL 負荷
  - バス・ドライバ出力:15 の LSTTL 負荷
- 広い動作温度範囲:-55℃～125℃
- 平衡な伝搬遅延と遷移時間
- LSTTL ロジック IC に比べて消費電力を大幅削減
- HC タイプ
  - 2V～6V で動作
  - 優れたノイズ耐性:N_{IL} = V_{CC} の 30%、N_{IH} = V_{CC} の 30% (V_{CC} = 5V の場合)
- HCT タイプ
  - 4.5V～5.5V で動作
  - LSTTL 入力ロジックと直接互換、V_{IL} = 0.8V (最大値)、V_{IH} = 2V (最小値)
  - CMOS 入力互換、V_{OL}、V_{OH} で $I_I \leq 1\mu A$

2 概要

CDx4HC(T)259 は、3 つのアクティブ動作モード (アドレス指定可能ラッチ、メモリ、8 ライン・デマルチプレクサ) と 1 つのリセット・モードを備えた 8 ビット・アドレス指定可能ラッチです。

製品情報

部品番号	パッケージ (1)	本体サイズ (公称)
CD54HC259F3A	CDIP (16)	21.34mm × 6.92mm
CD54HCT259F3A	CDIP (16)	21.34mm × 6.92mm
CD74HC259E	PDIP (16)	19.31mm × 6.35mm
CD74HCT259E	PDIP (16)	19.31mm × 6.35mm
CD74HC259M	SOIC (16)	9.90mm × 3.90mm
CD74HCT259M	SOIC (16)	9.90mm × 3.90mm

(1) すべてのパッケージについては、このデータシートの末尾にある注文情報を参照してください。

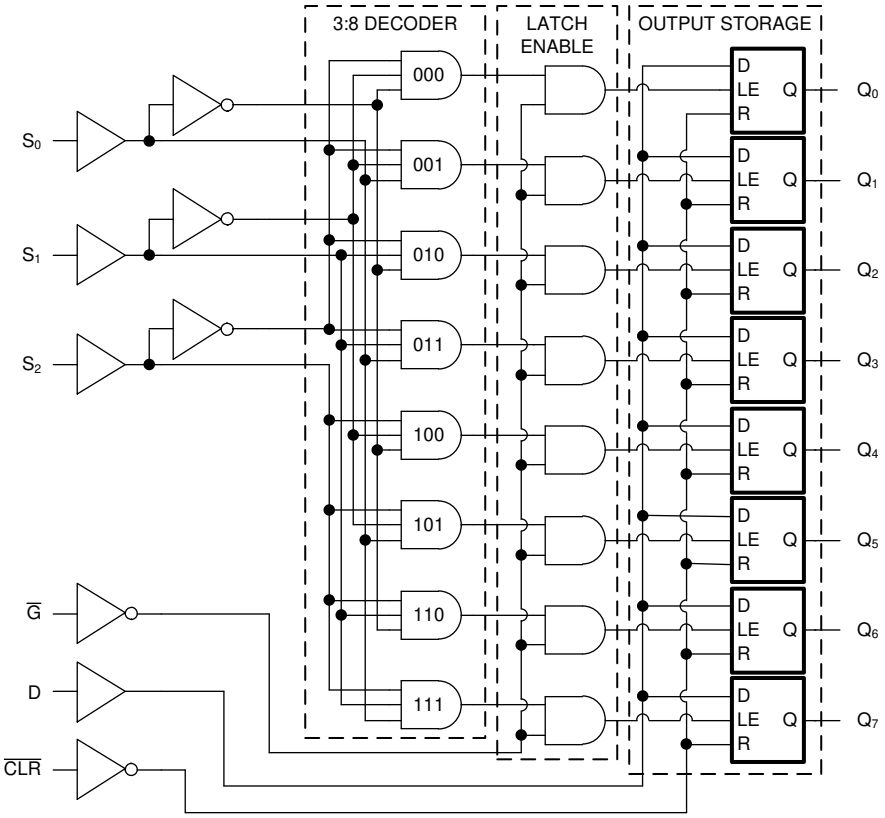

機能ブロック図

英語版の TI 製品についての情報を翻訳したこの資料は、製品の概要を確認する目的で便宜的に提供しているものです。該当する正式な英語版の最新情報は、www.ti.com で閲覧でき、その内容が常に優先されます。TI では翻訳の正確性および妥当性につきましては一切保証いたしません。実際の設計などの前には、必ず最新版の英語版をご参照くださいますようお願いいたします。

Table of Contents

1 特長 ... 1
2 概要 ... 1
3 Revision History ... 2
4 Pin Configuration and Functions ... 3
5 Specifications ... 4
5.1 Absolute Maximum Ratings ... 4
5.2 Recommended Operating Conditions ... 4
5.3 Thermal Information ... 4
5.4 Electrical Characteristics ... 5
5.5 Prerequisite for Switching Characteristics ... 6
5.6 Switching Characteristics(2) ... 7
6 Parameter Measurement Information ... 8
7 Detailed Description ... 10
7.1 Overview ... 10
7.2 Functional Block Diagram ... 10
7.3 Device Functional Modes ... 11
8 Power Supply Recommendations ... 12
9 Layout ... 12
9.1 Layout Guidelines ... 12
10 Device and Documentation Support ... 13
10.1 Documentation Support ... 13
10.2 Receiving Notification of Documentation Updates ... 13
10.3 サポート・リソース ... 13
10.4 Trademarks ... 13
10.5 Electrostatic Discharge Caution ... 13
10.6 Glossary ... 13
11 Mechanical, Packaging, and Orderable Information ... 13

3 Revision History

資料番号末尾の英字は改訂を表しています。その改訂履歴は英語版に準じています。

Changes from Revision C (October 2003) to Revision D (November 2021)	Page
• 最新のデータシート規格を反映するように、文書全体の表、図、相互参照の採番と書式設定を更新	1
• Updated pin names to match current TI naming conventions. A_0 is now S_0, A_1 is now S_1, A_2 is now S_2	3

Copyright © 2022 Texas Instruments Incorporated

4 Pin Configuration and Functions

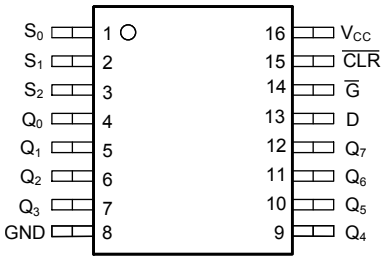

J, D or PW Package
16-Pin CDIP, SOIC or TSSOP
Top View

5 Specifications

5.1 Absolute Maximum Ratings

Over operating free-air temperature range (unless otherwise noted)(1)

			MIN	MAX	UNIT
V_{CC}	Supply voltage		-0.5	7	V
I_{IK}	Input clamp diode current	For V_I < -0.5V or V_I > V_{CC} + 0.5V		±20	mA
I_{OK}	Output clamp diode current	For V_O < -0.5V or V_O > V_{CC} + 0.5V		±20	mA
I_O	Drain current, per output	For -0.5V < V_O < V_{CC} + 0.5V		±25	mA
I_O	Output source or sink current per output pin	For V_O > -0.5V or V_O < V_{CC} + 0.5V		±25	mA
	Continuous current through V_{CC} or GND			±50	mA
T_J	Junction temperature			150	°C
T_{stg}	Storage temperature		-65	150	°C
	Lead temperature (Soldering 10s) (SOIC - lead tips only)			300	°C

(1) Stresses beyond those listed under *absolute maximum ratings* may cause permanent damage to the device. These are stress ratings only and functional operation of the device at these or any other conditions beyond those indicated under *recommended operating conditions* is not implied. Exposure to absolute-maximum-rated conditions for extended periods may affect device reliability.

5.2 Recommended Operating Conditions

			MIN	MAX	UNIT
V_{CC}	Supply voltage range	HC Types	2	6	V
		HCT Types	4.5	5.5	
V_I	Input voltage		0	V_{CC}	V
V_O	Output voltage		0	V_{CC}	V
t_t	Input rise and fall time	V_{CC} = 2V		1000	ns
		V_{CC} = 4.5V		500	
		V_{CC} = 6V		400	
T_A	Temperature range		-55	125	°C

5.3 Thermal Information

THERMAL METRIC		CD74HC259, CD74HCT259		UNIT
		N (PDIP)	D (SOIC)	
		16 PINS	16 PINS	
$R_{\theta JA}$	Junction-to-ambient thermal resistance(1)	67	73	°C/W

(1) For more information about traditional and new thermal metrics, see the Semiconductor and IC Package Thermal Metrics application report.

Copyright © 2022 Texas Instruments Incorporated

5.4 Electrical Characteristics

PARAMETER		TEST CONDITIONS	V_{CC} (V)	25°C			-40°C to 85°C		-55°C to 125°C		UNIT
				MIN	TYP	MAX	MIN	MAX	MIN	MAX	
HC TYPES											
V_{IH}	High-level input voltage		2	1.5			1.5		1.5		V
			4.5	3.15			3.15		3.15		V
			6	4.2			4.2		4.2		V
V_{IL}	Low-level input voltage		2			0.5		0.5		0.5	V
			4.5			1.35		1.35		1.35	V
			6			1.8		1.8		1.8	V
V_{OH}	High-level output voltage	I_{OH} = – 20 µA	2	1.9			1.9		1.9		V
		I_{OH} = – 20 µA	4.5	4.4			4.4		4.4		V
		I_{OH} = – 20 µA	6	5.9			5.9		5.9		V
	High-level output voltage	I_{OH}= – 4 mA	4.5	3.98			3.84		3.7		V
		I_{OH} = – 5.2 mA	6	5.48			5.34		5.2		V
V_{OL}	Low-level output voltage	I_{OL} = 20 µA	2			0.1		0.1		0.1	V
		I_{OL} = 20 µA	4.5			0.1		0.1		0.1	V
		I_{OL} = 20 µA	6			0.1		0.1		0.1	V
	Low-level output voltage	I_{OL}= 4 mA	4.5			0.26		0.33		0.4	V
		I_{OL} = 5.2 mA	6			0.26		0.33		0.4	V
I_I	Input leakage current	V_I = V_{CC} or GND	6			±0.1		±1		±1	µA
I_{CC}	Supply current	V_I = V_{CC} or GND	6			8		80		160	µA
HCT TYPES											
V_{IH}	High-level input voltage		4.5 to 5.5	2			2		2		V
V_{IL}	Low-level input voltage		4.5 to 5.5			0.8		0.8		0.8	V
V_{OH}	High-level output voltage	V_{OH} = – 20 µA	4.5	4.4			4.4		4.4		V
	HIgh-level output voltage	V_{OH} = – 4 mA	4.5	3.98			3.84		3.7		V
V_{OL}	Low-level output voltage	V_{OL} = 20 µA	4.5			0.1		0.1		0.1	V
	Low-level output voltage	V_{OL} = 4 mA	4.5			0.26		0.33		0.4	V
I_I	Input leakage current	V_I = V_{CC} or GND	5.5			±0.1		±1		±1	µA
I_{CC}	Supply current	V_I = V_{CC} or GND	5.5			8		80		160	µA
ΔI_{CC}(1)	Additional supply current per input pin	One of A0 - A2 and $\overline{LE}$ inputs held at V_{CC} – 2.1	4.5 to 5.5		100	540		675		735	µA
		D input held at V_{CC} – 2.1	4.5 to 5.5		100	432		540		588	
		$\overline{MR}$ input held at V_{CC} – 2.1	4.5 to 5.5		100	270		337.5		367.5	

(1) V_I = V_{IH} or V_{IL}, unless otherwise noted.

Copyright © 2022 Texas Instruments Incorporated

5.5 Prerequisite for Switching Characteristics

PARAMETER		V_{CC} (V)	25°C			-40°C to 85°C			-55°C to 125°C			UNIT
			MIN	TYP	MAX	MIN	TYP	MAX	MIN	TYP	MAX	
HC TYPES												
t_{WL}	Pulse Width $\overline{G}$	2	70			90			105			ns
		4.5	14			18			21			
		5	12			15			18			
t_{WL}	$\overline{CLR}$	2	70			90			105			ns
		4.5	14			18			21			
		6	12			15			18			
t_{SU}	Setup time D to $\overline{G}$ S to $\overline{G}$	2	80			100			120			ns
		4.5	16			20			24			
		6	14			17			20			
t_H	Hold time D to $\overline{G}$ S to $\overline{G}$	2	0			0			0			ns
		4.5	0			0			0			
		6	0			0			0			
HCT TYPES												
t_{WL}	Pulse width $\overline{G}$ $\overline{CLR}$	4.5	18			23			27			ns
t_{SU}	Setup Time D to $\overline{G}$ S to $\overline{G}$	4.5	17			21			26			ns
t_H	Hold Time D to $\overline{G}$ S to $\overline{G}$	4.5	0			0			0			pF

Copyright © 2022 Texas Instruments Incorporated

5.6 Switching Characteristics[2]

C_L = 50pF, Input t_t = 6ns

PARAMETER		V_{CC} (V)	25°C			-40°C to 85°C		-55°C to 125°C		UNIT
			MIN	TYP	MAX	MIN	MAX	MIN	MAX	
HC TYPES										
t_{pd}	D to Q	2			185		230		280	ns
		4.5		15[1]	37		46		56	
		6			31		39		48	
	$\overline{G}$ to Q	2			170		215		255	ns
		4.5		14[1]	34		43		51	
		6			29		37		43	
	S to Q	2			185		230		280	ns
		4.5		15[1]	37		46		56	
		6			31		39		48	
	$\overline{CLR}$ to Q	2			155		195		235	ns
		4.5		13[1]	31		39		47	
		6			26		33		40	
t_t	Output transition time	2			75		95		110	ns
		4.5			15		19		22	
		6			13		16		19	
C_{pd}	Power dissipation Capacitance[1]	5		21[1]						pF
C_i	Input capacitance		10		10	10		10		pF
HCT TYPES										
t_{pd}	D to Q	4.5		16[1]	39		49		59	ns
	$\overline{G}$ to Q	4.5		16[1]	38		48		57	ns
	S to Q	4.5		17[1]	41		51		61	ns
	$\overline{CLR}$ to Q	4.5		16[1]	39		49		59	pF
C_{pd}	Power dissipaction Capacitance[1]	5		22[1]						pF
C_i	Input Capacitance		10		10	10		10		pF
t_t	Output transition time	4.5			15		19		22	ns

(1) C_L = 15pF and V_{CC} = 5 V.
(2) For details on CMOS power calculation see, SCAA053B.

Copyright © 2022 Texas Instruments Incorporated

6 Parameter Measurement Information

Phase relationships between waveforms were chosen arbitrarily. All input pulses are supplied by generators having the following characteristics: PRR ≤ 1 MHz, Z_O = 50 Ω, t_t < 6 ns.

For clock inputs, f_{max} is measured when the input duty cycle is 50%.

The outputs are measured one at a time with one input transition per measurement.

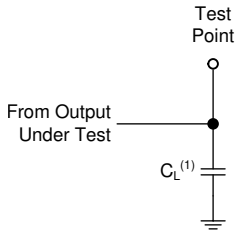

(1) C_L includes probe and test-fixture capacitance.

図 6-1. Load Circuit for Push-Pull Outputs

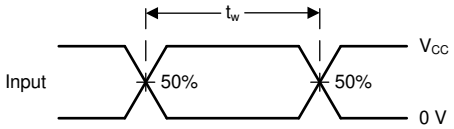

図 6-2. Voltage Waveforms, Standard CMOS Inputs Pulse Duration

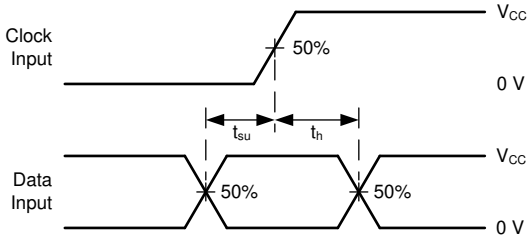

図 6-3. Voltage Waveforms, Standard CMOS Inputs Setup and Hold Times

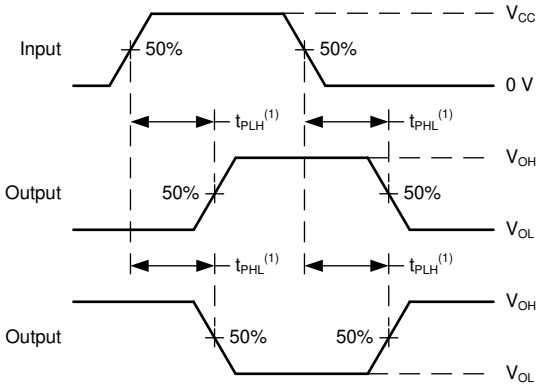

(1) The greater between t_{PLH} and t_{PHL} is the same as t_{pd}.

図 6-4. Voltage Waveforms, Propagation Delays for Standard CMOS Inputs

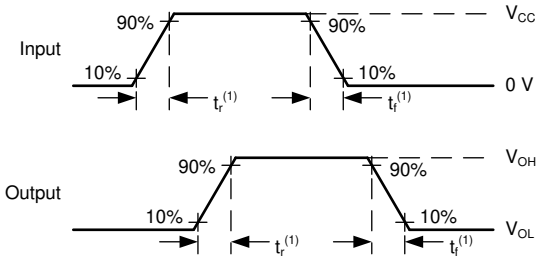

(1) The greater between t_r and t_f is the same as t_t.

図 6-5. Voltage Waveforms, Input and Output Transition Times for Standard CMOS Inputs

Copyright © 2022 Texas Instruments Incorporated

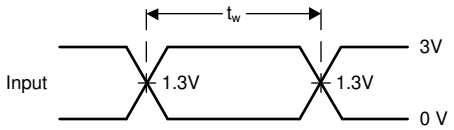

図 6-6. Voltage Waveforms, TTL-Compatible CMOS Inputs Pulse Duration

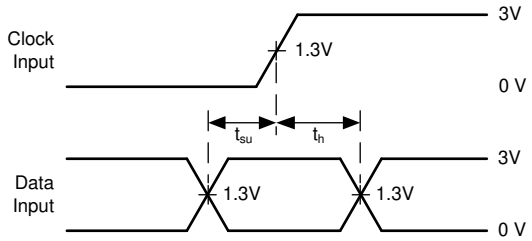

図 6-7. Voltage Waveforms, TTL-Compatible CMOS Inputs Setup and Hold Times

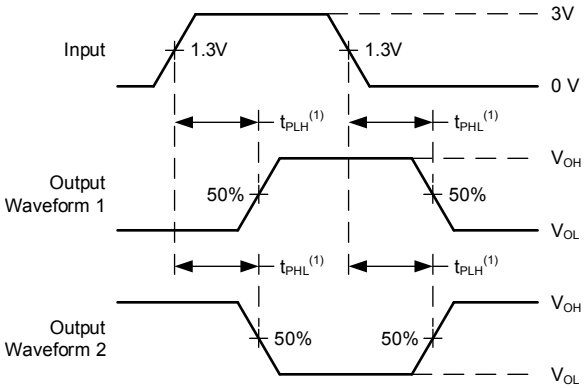

(1) The greater between t_{PLH} and t_{PHL} is the same as t_{pd}.

図 6-8. Voltage Waveforms, Propagation Delays for TTL-Compatible Inputs

Copyright © 2022 Texas Instruments Incorporated

7 Detailed Description

7.1 Overview

The CDx4HC(T)259 8-bit addressable latches are designed for general-purpose storage applications in digital systems. Specific uses include working registers, serial-holding registers, and active-high decoders or demultiplexers. They are multifunctional devices capable of storing single-line data in eight addressable latches and being a 1-of-8 decoder or demultiplexer with active-high outputs.

Four distinct modes of operation are selectable by controlling the clear ($\overline{CLR}$) and enable ($\overline{G}$) inputs:

- Addressable-latch mode: $\overline{CLR}$ = HIGH; $\overline{G}$ = LOW
  - Data at the data-in terminal is written into the addressed latch
  - The addressed latch follows the data input, with all unaddressed latches remaining in their previous states
- Memory mode: $\overline{CLR}$ = HIGH; $\overline{G}$ = HIGH
  - All latches remain in their previous states and are unaffected by the data or address inputs
  - To eliminate the possibility of entering erroneous data in the latches, $\overline{G}$ should be held high (inactive) while the address lines are changing
- 1-of-8 decoding or demultiplexing mode: $\overline{CLR}$ = LOW; $\overline{G}$ = LOW
  - The addressed output follows the level of the D input with all other outputs low
- Clear mode: $\overline{CLR}$ = LOW; $\overline{G}$ = HIGH
  - All outputs are low and unaffected by the address and data inputs

7.2 Functional Block Diagram

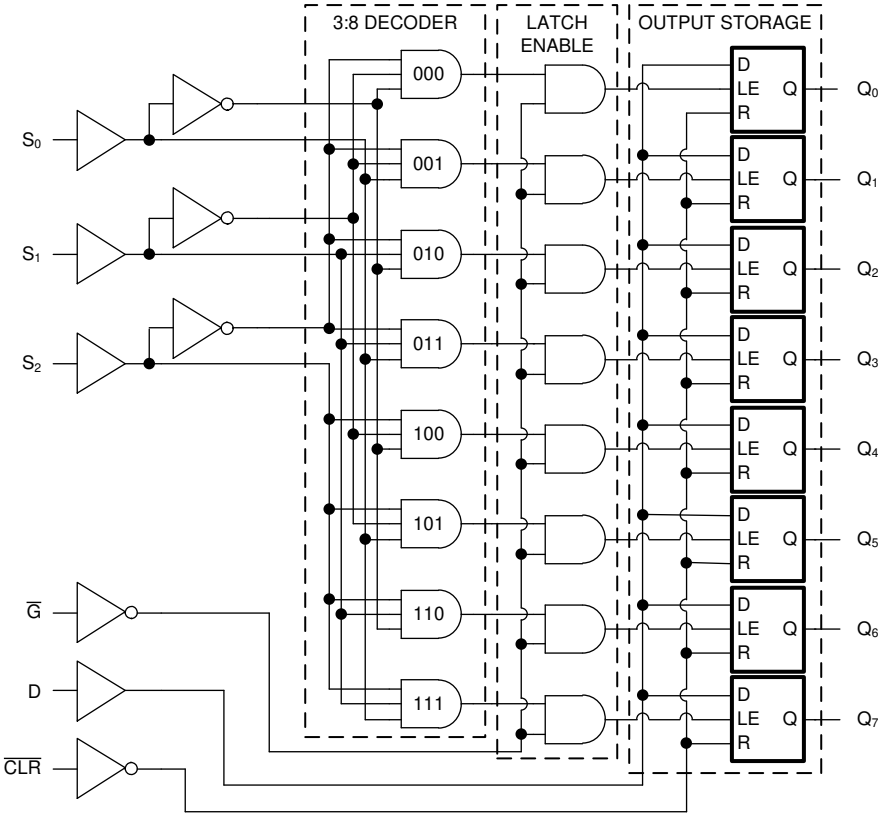

Copyright © 2022 Texas Instruments Incorporated

7.3 Device Functional Modes

The Function Tableand Latch Selection Table below list the functional modes of the CDx4HC(T)259.

表 7-1. Function Table

INPUTS(1)		OUTPUT OF ADDRESSED LATCH(2)	EACH OTHER OUTPUT(2)	FUNCTION
$\overline{CLR}$	$\overline{G}$			
H	L	D	Q_{iO}	Addressable latch
H	H	Q_{iO}	Q_{iO}	Memory
L	L	D	L	8-line demultiplexer
L	H	L	L	Clear

(1) H = High voltage level, L = Low voltage level
(2) Q_{iO} = Previous output state of selected latch, D = Data input logic value

表 7-2. Latch Selection Table

SELECT INPUTS(1)			LATCH ADDRESSED
S2	S1	S0	
L	L	L	0
L	L	H	1
L	H	L	2
L	H	H	3
H	L	L	4
H	L	H	5
H	H	L	6
H	H	H	7

(1) H = High Voltage Level, L = Low Voltage Level

Copyright © 2022 Texas Instruments Incorporated

8 Power Supply Recommendations

The power supply can be any voltage between the minimum and maximum supply voltage rating located in the *Recommended Operating Conditions*. Each V_{CC} terminal should have a good bypass capacitor to prevent power disturbance. A 0.1-µF capacitor is recommended for this device. It is acceptable to parallel multiple bypass caps to reject different frequencies of noise. The 0.1-µF and 1-µF capacitors are commonly used in parallel. The bypass capacitor should be installed as close to the power terminal as possible for best results.

9 Layout

9.1 Layout Guidelines

When using multiple-input and multiple-channel logic devices inputs must not ever be left floating. In many cases, functions or parts of functions of digital logic devices are unused; for example, when only two inputs of a triple-input AND gate are used or only 3 of the 4 buffer gates are used. Such unused input pins must not be left unconnected because the undefined voltages at the outside connections result in undefined operational states. All unused inputs of digital logic devices must be connected to a logic high or logic low voltage, as defined by the input voltage specifications, to prevent them from floating. The logic level that must be applied to any particular unused input depends on the function of the device. Generally, the inputs are tied to GND or V_{CC}, whichever makes more sense for the logic function or is more convenient.

Copyright © 2022 Texas Instruments Incorporated

10 Device and Documentation Support

TI offers an extensive line of development tools. Tools and software to evaluate the performance of the device, generate code, and develop solutions are listed below.

10.1 Documentation Support

10.1.1 Related Documentation

10.2 Receiving Notification of Documentation Updates

To receive notification of documentation updates, navigate to the device product folder on ti.com. Click on *Subscribe to updates* to register and receive a weekly digest of any product information that has changed. For change details, review the revision history included in any revised document.

10.3 サポート・リソース

TI E2E™ サポート・フォーラムは、エンジニアが検証済みの回答と設計に関するヒントをエキスパートから迅速かつ直接得ることができる場所です。既存の回答を検索したり、独自の質問をしたりすることで、設計で必要な支援を迅速に得ることができます。

リンクされているコンテンツは、該当する貢献者により、現状のまま提供されるものです。これらは TI の仕様を構成するものではなく、必ずしも TI の見解を反映したものではありません。TI の使用条件を参照してください。

10.4 Trademarks

TI E2E™ is a trademark of Texas Instruments.
すべての商標は、それぞれの所有者に帰属します。

10.5 Electrostatic Discharge Caution



This integrated circuit can be damaged by ESD. Texas Instruments recommends that all integrated circuits be handled with appropriate precautions. Failure to observe proper handling and installation procedures can cause damage.

ESD damage can range from subtle performance degradation to complete device failure. Precision integrated circuits may be more susceptible to damage because very small parametric changes could cause the device not to meet its published specifications.

10.6 Glossary

TI Glossary — This glossary lists and explains terms, acronyms, and definitions.

11 Mechanical, Packaging, and Orderable Information

The following pages include mechanical, packaging, and orderable information. This information is the most current data available for the designated devices. This data is subject to change without notice and revision of this document. For browser-based versions of this data sheet, refer to the left-hand navigation.

Copyright © 2022 Texas Instruments Incorporated

PACKAGING INFORMATION

Orderable part number	Status (1)	Material type (2)	Package | Pins	Package qty | Carrier	RoHS (3)	Lead finish/ Ball material (4)	MSL rating/ Peak reflow (5)	Op temp (°C)	Part marking (6)
5962-8985201EA	Active	Production	CDIP (J) | 16	25 | TUBE	No	SNPB	N/A for Pkg Type	-55 to 125	5962-8985201EA CD54HCT259F3A
CD54HC259F3A	Active	Production	CDIP (J) | 16	25 | TUBE	No	SNPB	N/A for Pkg Type	-55 to 125	8551901EA CD54HC259F3A
CD54HC259F3A.A	Active	Production	CDIP (J) | 16	25 | TUBE	No	SNPB	N/A for Pkg Type	-55 to 125	8551901EA CD54HC259F3A
CD54HCT259F3A	Active	Production	CDIP (J) | 16	25 | TUBE	No	SNPB	N/A for Pkg Type	-55 to 125	5962-8985201EA CD54HCT259F3A
CD54HCT259F3A.A	Active	Production	CDIP (J) | 16	25 | TUBE	No	SNPB	N/A for Pkg Type	-55 to 125	5962-8985201EA CD54HCT259F3A
CD74HC259E	Active	Production	PDIP (N) | 16	25 | TUBE	Yes	NIPDAU	N/A for Pkg Type	-55 to 125	CD74HC259E
CD74HC259E.A	Active	Production	PDIP (N) | 16	25 | TUBE	Yes	NIPDAU	N/A for Pkg Type	-55 to 125	CD74HC259E
CD74HC259M	Obsolete	Production	SOIC (D) | 16	-	-	Call TI	Call TI	-55 to 125	HC259M
CD74HC259M96	Active	Production	SOIC (D) | 16	2500 | LARGE T&R	Yes	NIPDAU | SN	Level-1-260C-UNLIM	-55 to 125	HC259M
CD74HC259M96.A	Active	Production	SOIC (D) | 16	2500 | LARGE T&R	Yes	NIPDAU	Level-1-260C-UNLIM	-55 to 125	HC259M
CD74HC259M96G4	Active	Production	SOIC (D) | 16	2500 | LARGE T&R	Yes	NIPDAU	Level-1-260C-UNLIM	-55 to 125	HC259M
CD74HC259M96G4.A	Active	Production	SOIC (D) | 16	2500 | LARGE T&R	Yes	NIPDAU	Level-1-260C-UNLIM	-55 to 125	HC259M
CD74HC259MT	Obsolete	Production	SOIC (D) | 16	-	-	Call TI	Call TI	-55 to 125	HC259M
CD74HCT259E	Active	Production	PDIP (N) | 16	25 | TUBE	Yes	NIPDAU	N/A for Pkg Type	-55 to 125	CD74HCT259E
CD74HCT259E.A	Active	Production	PDIP (N) | 16	25 | TUBE	Yes	NIPDAU	N/A for Pkg Type	-55 to 125	CD74HCT259E
CD74HCT259EE4	Active	Production	PDIP (N) | 16	25 | TUBE	Yes	NIPDAU	N/A for Pkg Type	-55 to 125	CD74HCT259E
CD74HCT259M	Obsolete	Production	SOIC (D) | 16	-	-	Call TI	Call TI	-55 to 125	HCT259M
CD74HCT259M96	Active	Production	SOIC (D) | 16	2500 | LARGE T&R	Yes	NIPDAU | SN	Level-1-260C-UNLIM	-55 to 125	HCT259M
CD74HCT259M96.A	Active	Production	SOIC (D) | 16	2500 | LARGE T&R	Yes	NIPDAU	Level-1-260C-UNLIM	-55 to 125	HCT259M
CD74HCT259M96G4	Active	Production	SOIC (D) | 16	2500 | LARGE T&R	Yes	NIPDAU	Level-1-260C-UNLIM	-55 to 125	HCT259M
CD74HCT259M96G4.A	Active	Production	SOIC (D) | 16	2500 | LARGE T&R	Yes	NIPDAU	Level-1-260C-UNLIM	-55 to 125	HCT259M
CD74HCT259MT	Obsolete	Production	SOIC (D) | 16	-	-	Call TI	Call TI	-55 to 125	HCT259M

(1) **Status:** For more details on status, see our product life cycle.

(2) **Material type:** When designated, preproduction parts are prototypes/experimental devices, and are not yet approved or released for full production. Testing and final process, including without limitation quality assurance, reliability performance testing, and/or process qualification, may not yet be complete, and this item is subject to further changes or possible discontinuation. If available for ordering, purchases will be subject to an additional waiver at checkout, and are intended for early internal evaluation purposes only. These items are sold without warranties of any kind.

(3) **RoHS values:** Yes, No, RoHS Exempt. See the TI RoHS Statement for additional information and value definition.

(4) **Lead finish/Ball material:** Parts may have multiple material finish options. Finish options are separated by a vertical ruled line. Lead finish/Ball material values may wrap to two lines if the finish value exceeds the maximum column width.

(5) **MSL rating/Peak reflow:** The moisture sensitivity level ratings and peak solder (reflow) temperatures. In the event that a part has multiple moisture sensitivity ratings, only the lowest level per JEDEC standards is shown. Refer to the shipping label for the actual reflow temperature that will be used to mount the part to the printed circuit board.

(6) **Part marking:** There may be an additional marking, which relates to the logo, the lot trace code information, or the environmental category of the part.

Multiple part markings will be inside parentheses. Only one part marking contained in parentheses and separated by a "~" will appear on a part. If a line is indented then it is a continuation of the previous line and the two combined represent the entire part marking for that device.

Important Information and Disclaimer: The information provided on this page represents TI's knowledge and belief as of the date that it is provided. TI bases its knowledge and belief on information provided by third parties, and makes no representation or warranty as to the accuracy of such information. Efforts are underway to better integrate information from third parties. TI has taken and continues to take reasonable steps to provide representative and accurate information but may not have conducted destructive testing or chemical analysis on incoming materials and chemicals. TI and TI suppliers consider certain information to be proprietary, and thus CAS numbers and other limited information may not be available for release.

In no event shall TI's liability arising out of such information exceed the total purchase price of the TI part(s) at issue in this document sold by TI to Customer on an annual basis.

OTHER QUALIFIED VERSIONS OF CD54HC259, CD54HCT259, CD74HC259, CD74HCT259 :

- Catalog : CD74HC259, CD74HCT259
- Military : CD54HC259, CD54HCT259

NOTE: Qualified Version Definitions:

- Catalog - TI's standard catalog product
- Military - QML certified for Military and Defense Applications

TAPE AND REEL INFORMATION

REEL DIMENSIONS

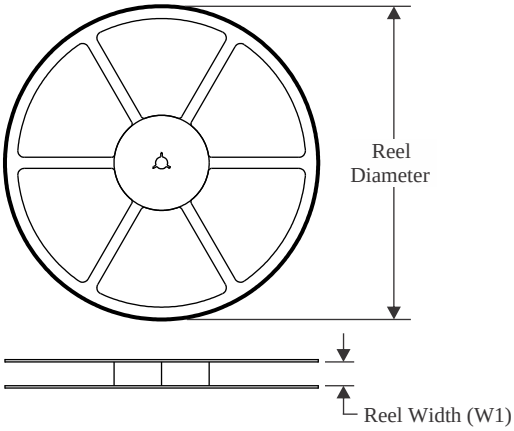

TAPE DIMENSIONS

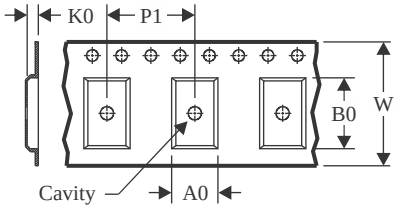

A0	Dimension designed to accommodate the component width
B0	Dimension designed to accommodate the component length
K0	Dimension designed to accommodate the component thickness
W	Overall width of the carrier tape
P1	Pitch between successive cavity centers

QUADRANT ASSIGNMENTS FOR PIN 1 ORIENTATION IN TAPE

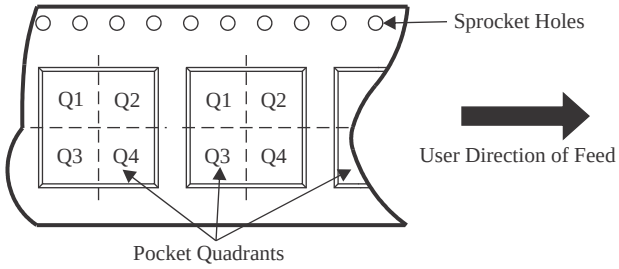

*All dimensions are nominal

Device	Package Type	Package Drawing	Pins	SPQ	Reel Diameter (mm)	Reel Width W1 (mm)	A0 (mm)	B0 (mm)	K0 (mm)	P1 (mm)	W (mm)	Pin1 Quadrant
CD74HC259M96	SOIC	D	16	2500	330.0	16.4	6.5	10.3	2.1	8.0	16.0	Q1
CD74HC259M96G4	SOIC	D	16	2500	330.0	16.4	6.5	10.3	2.1	8.0	16.0	Q1
CD74HCT259M96G4	SOIC	D	16	2500	330.0	16.4	6.5	10.3	2.1	8.0	16.0	Q1

TAPE AND REEL BOX DIMENSIONS

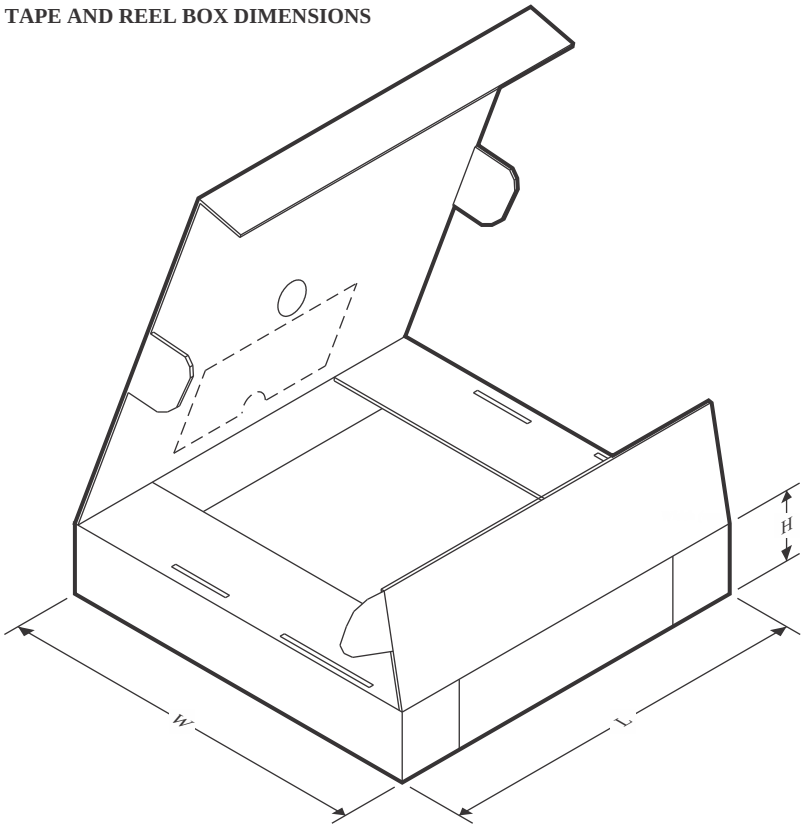

*All dimensions are nominal

Device	Package Type	Package Drawing	Pins	SPQ	Length (mm)	Width (mm)	Height (mm)
CD74HC259M96	SOIC	D	16	2500	340.5	336.1	32.0
CD74HC259M96G4	SOIC	D	16	2500	353.0	353.0	32.0
CD74HCT259M96G4	SOIC	D	16	2500	353.0	353.0	32.0

TUBE

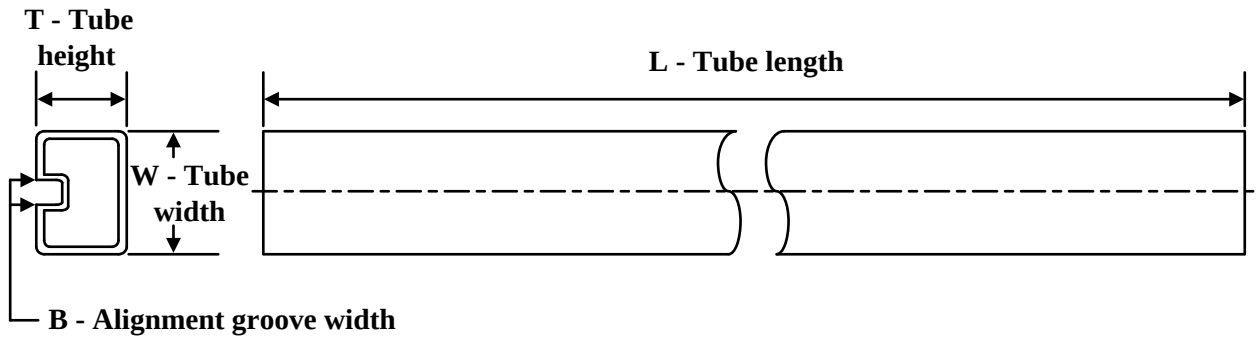

*All dimensions are nominal

Device	Package Name	Package Type	Pins	SPQ	L (mm)	W (mm)	T (µm)	B (mm)
CD74HC259E	N	PDIP	16	25	506	13.97	11230	4.32
CD74HC259E	N	PDIP	16	25	506	13.97	11230	4.32
CD74HC259E.A	N	PDIP	16	25	506	13.97	11230	4.32
CD74HC259E.A	N	PDIP	16	25	506	13.97	11230	4.32
CD74HCT259E	N	PDIP	16	25	506	13.97	11230	4.32
CD74HCT259E	N	PDIP	16	25	506	13.97	11230	4.32
CD74HCT259E.A	N	PDIP	16	25	506	13.97	11230	4.32
CD74HCT259E.A	N	PDIP	16	25	506	13.97	11230	4.32
CD74HCT259EE4	N	PDIP	16	25	506	13.97	11230	4.32
CD74HCT259EE4	N	PDIP	16	25	506	13.97	11230	4.32

J (R–GDIP–T**)

14 LEADS SHOWN

CERAMIC DUAL IN–LINE PACKAGE

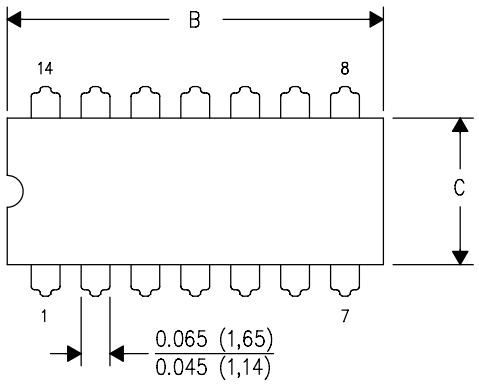

DIM \ PINS **	14	16	18	20
A	0.300 (7,62) BSC	0.300 (7,62) BSC	0.300 (7,62) BSC	0.300 (7,62) BSC
B MAX	0.785 (19,94)	.840 (21,34)	0.960 (24,38)	1.060 (26,92)
B MIN	—	—	—	—
C MAX	0.300 (7,62)	0.300 (7,62)	0.310 (7,87)	0.300 (7,62)
C MIN	0.245 (6,22)	0.245 (6,22)	0.220 (5,59)	0.245 (6,22)

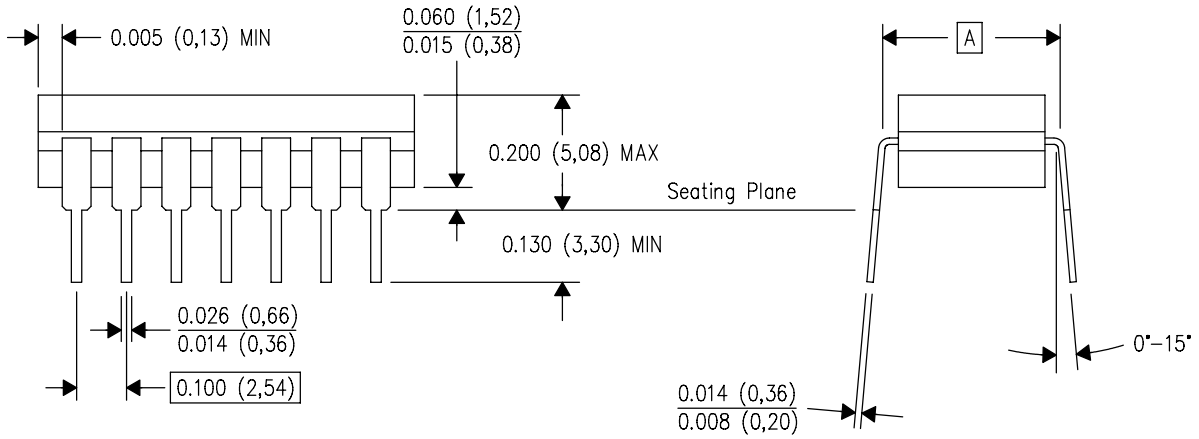

4040083/F 03/03

NOTES:
A. All linear dimensions are in inches (millimeters).
B. This drawing is subject to change without notice.
C. This package is hermetically sealed with a ceramic lid using glass frit.
D. Index point is provided on cap for terminal identification only on press ceramic glass frit seal only.
E. Falls within MIL STD 1835 GDIP1–T14, GDIP1–T16, GDIP1–T18 and GDIP1–T20.

N (R–PDIP–T**)

PLASTIC DUAL–IN–LINE PACKAGE

16 PINS SHOWN

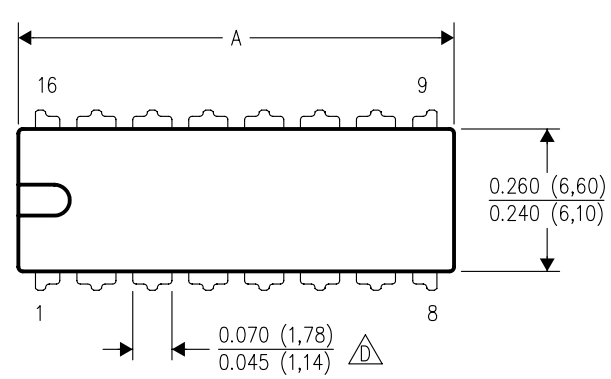

DIM \ PINS **	14	16	18	20
A MAX	0.775 (19,69)	0.775 (19,69)	0.920 (23,37)	1.060 (26,92)
A MIN	0.745 (18,92)	0.745 (18,92)	0.850 (21,59)	0.940 (23,88)
MS–001 VARIATION (C)	AA	BB	AC	AD

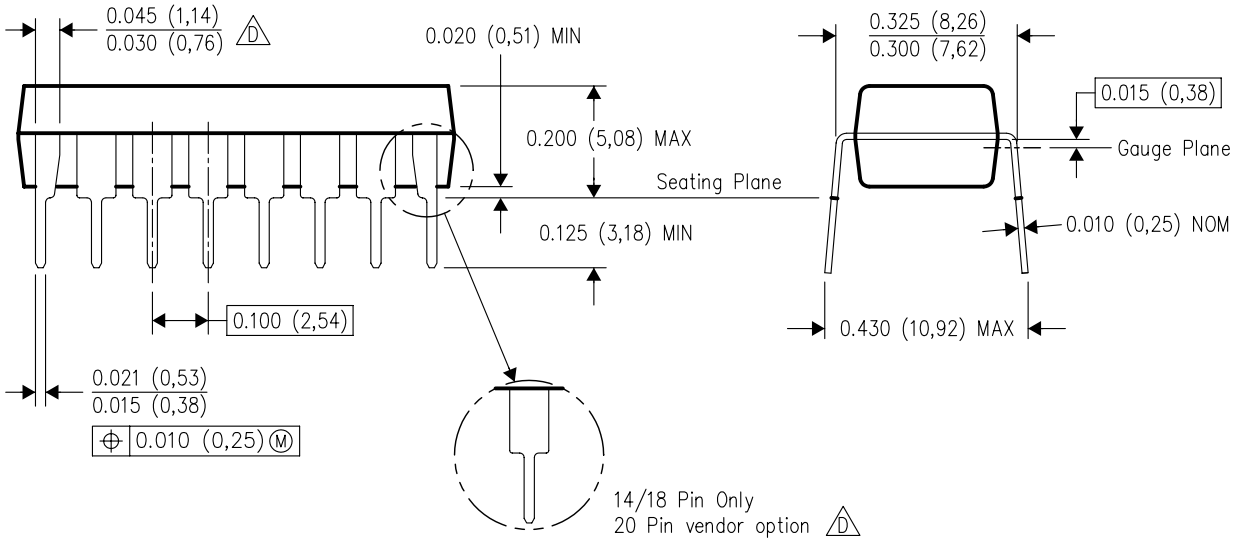

4040049/E 12/2002

NOTES:
A. All linear dimensions are in inches (millimeters).
B. This drawing is subject to change without notice.
C. Falls within JEDEC MS–001, except 18 and 20 pin minimum body length (Dim A).
D. The 20 pin end lead shoulder width is a vendor option, either half or full width.

D (R–PDSO–G16) PLASTIC SMALL OUTLINE

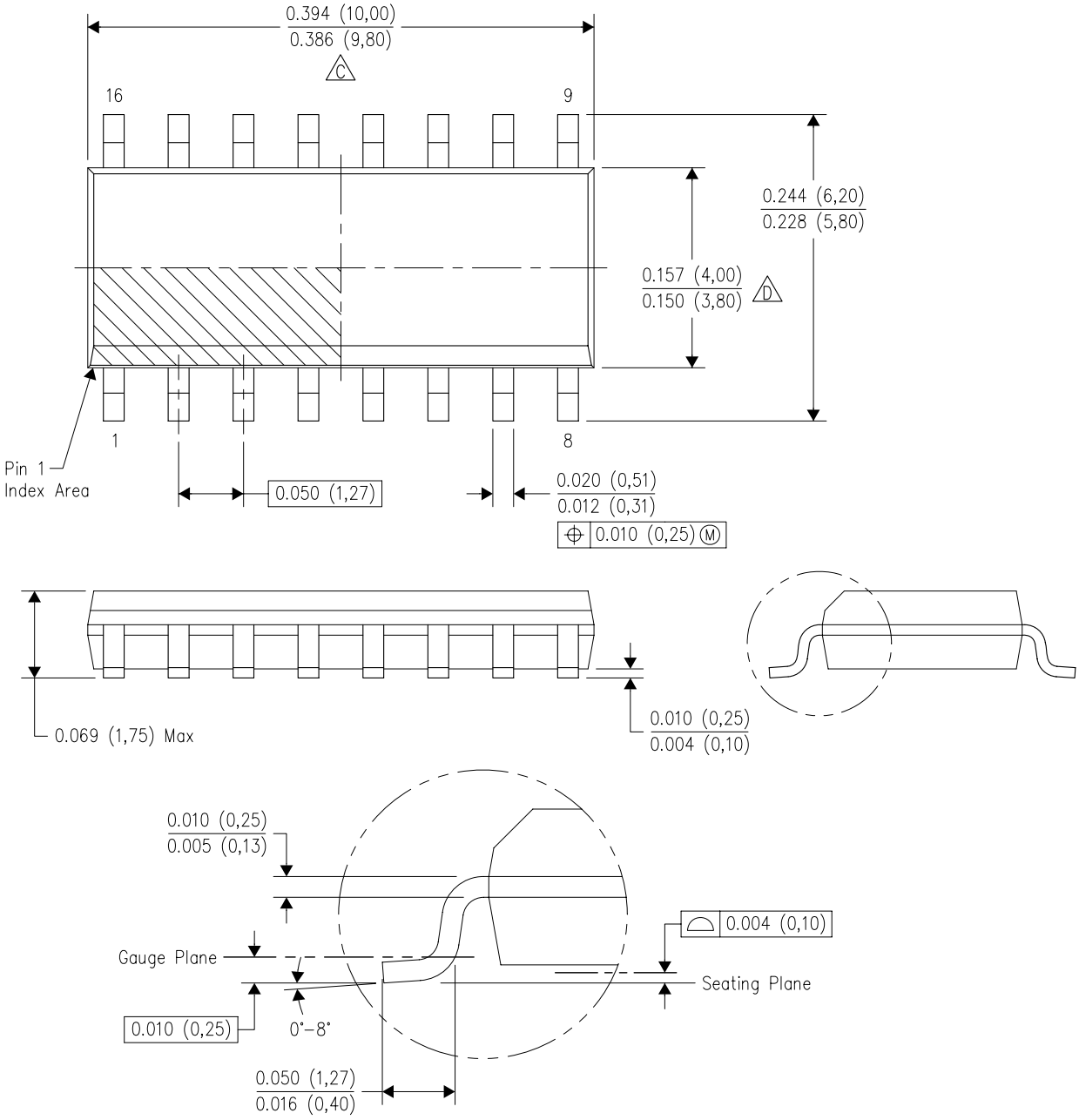

NOTES:
A. All linear dimensions are in inches (millimeters).
B. This drawing is subject to change without notice.
C. Body length does not include mold flash, protrusions, or gate burrs. Mold flash, protrusions, or gate burrs shall not exceed 0.006 (0,15) each side.
D. Body width does not include interlead flash. Interlead flash shall not exceed 0.017 (0,43) each side.
E. Reference JEDEC MS–012 variation AC.

重要なお知らせと免責事項

TI は、技術データと信頼性データ (データシートを含みます)、設計リソース (リファレンス デザインを含みます)、アプリケーションや設計に関する各種アドバイス、Web ツール、安全性情報、その他のリソースを、欠陥が存在する可能性のある「現状のまま」提供しており、商品性および特定目的に対する適合性の黙示保証、第三者の知的財産権の非侵害保証を含むいかなる保証も、明示的または黙示的にかかわらず拒否します。

これらのリソースは、TI 製品を使用する設計の経験を積んだ開発者への提供を意図したものです。(1) お客様のアプリケーションに適した TI 製品の選定、(2) お客様のアプリケーションの設計、検証、試験、(3) お客様のアプリケーションに該当する各種規格や、その他のあらゆる安全性、セキュリティ、規制、または他の要件への確実な適合に関する責任を、お客様のみが単独で負うものとします。

上記の各種リソースは、予告なく変更される可能性があります。これらのリソースは、リソースで説明されている TI 製品を使用するアプリケーションの開発の目的でのみ、TI はその使用をお客様に許諾します。これらのリソースに関して、他の目的で複製することや掲載することは禁止されています。TI や第三者の知的財産権のライセンスが付与されている訳ではありません。お客様は、これらのリソースを自身で使用した結果発生するあらゆる申し立て、損害、費用、損失、責任について、TI およびその代理人を完全に補償するものとし、TI は一切の責任を拒否します。

TI の製品は、 TI の販売条件 、 TI の総合的な品質ガイドライン 、 ti.com または TI 製品などに関連して提供される他の適用条件に従い提供されます。TI がこれらのリソースを提供することは、適用される TI の保証または他の保証の放棄の拡大や変更を意味するものではありません。 TI がカスタム、またはカスタマー仕様として明示的に指定していない限り、TI の製品は標準的なカタログに掲載される汎用機器です。

お客様がいかなる追加条項または代替条項を提案する場合も、TI はそれらに異議を唱え、拒否します。

Copyright © 2026, Texas Instruments Incorporated

最終更新日：2025 年 10 月