ハイスピード CMOS ロジック、非反転型および反転型、スリー・ステート出力のヘキサ・バッファ / ライン・ドライバ

1 特長

- バッファ付き入力
- 大電流バス・ドライバ出力
- t_{PLH}、t_{PHL} = 8ns の標準伝搬遅延 (V_{CC} = 5V、C_L = 15pF、T_A = 25℃)
- ファンアウト (全温度範囲にわたって)
  - 標準出力:10 の LSTTL 負荷
  - バス・ドライバ出力:15 の LSTTL 負荷
- 広い動作温度範囲:-55℃～125℃
- 平衡な伝搬遅延と遷移時間
- LSTTL ロジック IC に比べて消費電力を大幅削減
- HC タイプ
  - 2V～6V で動作
  - 優れたノイズ耐性:V_{CC} に対して N_{IL} = 30%、N_{IH} = 30% (V_{CC} = 5V 時)
- HCT タイプ
  - 4.5V～5.5V で動作
  - LSTTL 入力ロジックと直接互換、V_{IL} = 0.8V (最大値)、V_{IH} = 2V (最小値)
  - CMOS 入力互換、V_{OL}、V_{OH} で I_I ≦ 1μA

製品情報

部品番号	パッケージ(1)	本体サイズ (公称)
CD54HC365	J (CERDIP、16)	19.56 x 6.92mm
CD54HC366	J (CERDIP、16)	19.56 x 6.92mm
CD54HCT365	J (CERDIP、16)	19.56 x 6.92mm
CD74HC365	N (PDIP、16)	19.30 x 6.35mm
	D (SOIC、16)	9.90 x 3.90mm
	D (SOIC、16)	9.90 x 3.90mm
	D (SOIC、16)	9.90 x 3.90mm
CD74HC366	N (PDIP、16)	19.30 x 6.35mm
	D (SOIC、16)	9.90 x 3.90mm
	D (SOIC、16)	9.90 x 3.90mm
CD74HCT365	N (PDIP、16)	19.30 x 6.35mm
	D (SOIC、16)	9.90 x 3.90mm
	D (SOIC、16)	9.90 x 3.90mm
	D (SOIC、16)	9.90 x 3.90mm

(1) 利用可能なパッケージについては、このデータシートの末尾にある注文情報を参照してください。

2 概要

'HC365、'HCT365、'HC366 シリコン・ゲート CMOS スリー・ステート・バッファは、汎用高速非反転 / 反転バッファです。

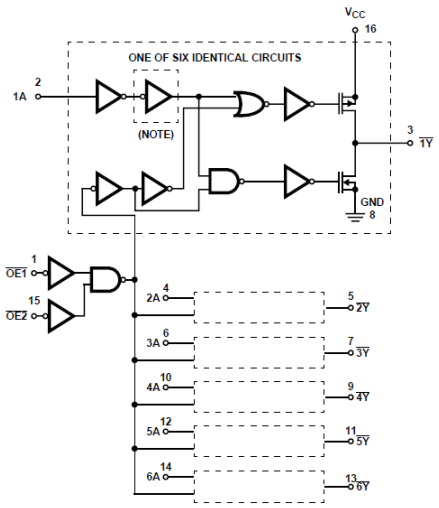

HC/HCT365 と HC366 のロジック図 (HC/HCT365 の出力は、1Y、2Y などに示されているものの補完です)

A. インバータは HC/HCT 365 には含まれていません。

英語版の TI 製品についての情報を翻訳したこの資料は、製品の概要を確認する目的で便宜的に提供しているものです。該当する正式な英語版の最新情報は、www.ti.com で閲覧でき、その内容が常に優先されます。TI では翻訳の正確性および妥当性につきましては一切保証いたしません。実際の設計などの前には、必ず最新版の英語版をご参照くださいますようお願いいたします。

Table of Contents

1 特長 ... 1
2 概要 ... 1
3 Revision History ... 2
4 Pin Configuration and Functions ... 3
5 Specifications ... 4
5.1 Absolute Maximum Ratings[(1)] ... 4
5.2 Operating Conditions ... 4
5.3 Thermal Information ... 4
5.4 Electrical Characteristics ... 5
5.5 HCT Input Loading Table ... 6
5.6 Switching Characteristics ... 6
6 Parameter Measurement Information ... 7
7 Detailed Description ... 8
7.1 Overview ... 8
7.2 Functional Block Diagram ... 8
7.3 Device Functional Modes ... 8
8 Power Supply Recommendations ... 9
9 Layout ... 9
9.1 Layout Guidelines ... 9
10 Device and Documentation Support ... 10
10.1 Receiving Notification of Documentation Updates ... 10
10.2 サポート・リソース ... 10
10.3 Trademarks ... 10
10.4 Electrostatic Discharge Caution ... 10
10.5 Glossary ... 10
11 Mechanical, Packaging, and Orderable Information ... 10

3 Revision History

資料番号末尾の英字は改訂を表しています。その改訂履歴は英語版に準じています。

Changes from Revision C (October 2003) to Revision D (July 2022)	Page
• 最新のデータシート規格を反映するように、文書全体の採番、書式設定、表、図、相互参照を更新	1

Copyright © 2022 Texas Instruments Incorporated

4 Pin Configuration and Functions

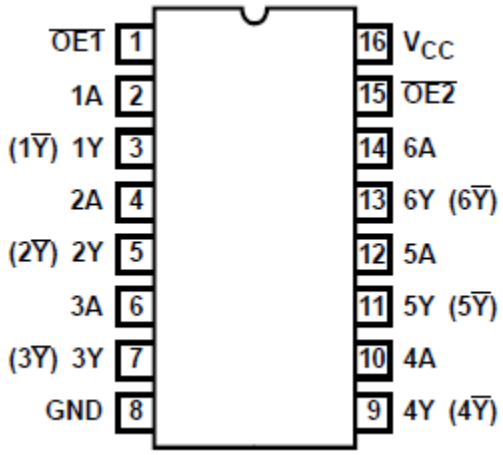

図 4-1. CD54HC365, CD54HCT365, CD54HC366 (CERDIP) CD74HC365, CD74HCT365, CD74HC366 (PDIP, SOIC) Top View

表 4-1. Pin Functions

PIN		TYPE(1)	DESCRIPTION
NO.	NAME		
1	$\overline{OE1}$	I	Output Enable 1, Active Low
2	1A	I	1A Input
3	1Y	O	1Y Output
4	2A	I	2A Input
5	2Y	O	2Y Output
6	3A	I	3A Input
7	3Y	O	3Y Output
8	GND	—	Ground Pin
9	4Y	O	4Y Output
10	4A	I	4A Input
11	5Y	O	5Y Output
12	5A	I	5A Input
13	6Y	O	6Y Output
14	6A	I	6A Input
15	$\overline{OE2}$	I	Output Enable 2, Active Low
16	V_{CC}	—	Power Pin

(1) Signal Types: I = Input, O = Output, I/O = Input or Output.

Copyright © 2022 Texas Instruments Incorporated

5 Specifications

5.1 Absolute Maximum Ratings[1]

			MIN	MAX	UNIT
V_{CC}	DC supply voltage		-0.5	7	V
I_{IK}	DC input diode current	For V_I < -0.5 V or V_I > V_{CC} + 0.5 V		±20	mA
I_{OK}	DC output diode current	For V_O < -0.5 V or V_O > V_{CC} + 0.5		±20	mA
I_O	DC drain current, per output	For -0.5 V < V_O < V_{CC} + 0.5 V		±35	mA
I_O	DC output source or sink current per output pin	For V_O > -0.5 V or V_O < V_{CC} + 0.5 V		±25	mA
I_{CC}	DC V_{CC} or ground current			±50	mA
T_J	Maximum junction temperature			150	℃
T_{stg}	Maximum storage temperature range		-65	150	℃
	Maximum lead temperature (soldering 10s)SOIC - lead tips only			300	℃

(1) Stresses beyond those listed under *absolute maximum ratings* may cause permanent damage to the device. These are stress ratings only and functional operation of the device at these or any other conditions beyond those indicated under *recommended operating conditions* is not implied. Exposure to absolute-maximum-rated conditions for extended periods may affect device reliability.

5.2 Operating Conditions

			MIN	MAX	UNIT
V_{CC}	Supply voltage range	HC Types	2	6	V
		HCT Types	4.5	5.5	V
V_I, V_O	DC input or output voltage		0	V_{CC}	V
	Input rise and fall time	2 V		1000	ns
		4.5 V		500	
		6 V		400	
T_A	Temperature range		-55	125	℃

5.3 Thermal Information

THERMAL METRIC		N (PDIP) 16 PINS	D (SOIC) 16 PINS	UNIT
$R_{\theta JA}$	Junction-to-ambient thermal resistance[1]	67	73	°C/W

(1) The package thermal impedance is calculated in accordance with JESD 51 - 7

Copyright © 2022 Texas Instruments Incorporated

5.4 Electrical Characteristics

PARAMETER		TEST CONDITIONS		V_{CC} (V)	25°C			–40°C to 85°C		–55°C to 125°C		UNIT
		V_I (V)	I_O (mA)		MIN	TYP	MAX	MIN	MAX	MIN	MAX	
HC TYPES												
V_{IH}	High level input voltage			2	1.5			1.5		1.5		V
				4.5	3.15			3.15		3.15		
				6	4.2			4.2		4.2		
V_{IL}	Low level input voltage			2			0.5		0.5		0.5	V
				4.5			1.35		1.35		1.35	
				6			1.8		1.8		1.8	
V_{OH}	High level output voltage CMOS loads	V_{IH} or V_{IL}	-0.02	2	1.9			1.9		1.9		V
			-0.02	4.5	4.4			4.4		4.4		
			-0.02	6	5.9			5.9		5.9		
	High level output voltage TTL loads		-6	4.5	3.98			3.84		3.7		
			-7.8	6	5.48			5.34		5.2		
V_{OL}	Low level output voltage CMOS loads	V_{IH} or V_{IL}	0.02	2			0.1		0.1		0.1	V
			0.02	4.5			0.1		0.1		0.1	
			0.02	6			0.1		0.1		0.1	
	Low level output voltage TTL loads	V_{IH} or V_{IL}	6	4.5			0.26		0.33		0.4	
			7.8	6			0.26		0.33		0.4	
I_I	Input leakage current	V_{CC} or GND		6			±0.1		±1		±1	μA
I_{CC}	Quiescent device current	V_{CC} or GND	0	6			8		80		160	μA
I_{OZ}	Three-state leakage current	V_{IH} or V_{IL}	V_O = V_{CC} or GND	6			±0.5		±5		±10	μA
HCT TYPES												
V_{IH}	High level input voltage			4.5 to 5.5	2			2		2		V
V_{IL}	Low level input voltage			4.5 to 5.5			0.8		0.8		0.8	V
V_{OH}	High level output voltage CMOS loads	V_{IH} or V_{IL}	-0.02	4.5	4.4			4.4		4.4		V
	High level output voltage TTL loads		-4	4.5	3.98			3.84		3.7		
V_{OL}	Low level output voltage CMOS loads	V_{IH} or V_{IL}	0.02	4.5			0.1		0.1		0.1	V
	Low level output voltage TTL loads		4	4.5			0.26		0.33		0.4	
I_I	Input leakage current	V_{CC} or GND	0	5.5			±0.1		±1		±1	μA
I_{CC}	Quiescent device current	V_{CC} or GND	0	5.5			8		80		160	μA
ΔI_{CC}	Additional supply current per input pin: 1 Unit Load(1)	V_{CC} - 2.1		4.5 to 5.5		100	360		450		490	μA
I_{OZ}	Three-state leakage current	V_{IL} or V_{IH}	V_O = V_{CC} or GND	5.5			±0.5		±5		±10	μA

(1) For dual-supply systems theoretical worst case (V_I = 2.4 V, V_{CC} = 5.5 V) specification is 1.8 mA

Copyright © 2022 Texas Instruments Incorporated

5.5 HCT Input Loading Table

Input	Unit Loads[1]
$\overline{OE1}$	0.6
All others	0.55

(1) Unit Load is ΔI_{CC} limit specified in セクション 5.4, e.g., 360 µA max at 25℃.

5.6 Switching Characteristics

t_r, t_f = 6 ns

PARAMETER		TEST CONDITIONS	V_{CC} (V)	25℃		40℃ to 85℃	55℃ to 125℃	UNIT
				TYP	MAX	MAX	MAX	
HC TYPES								
t_{PLH}, t_{PHL}	Propagation delay, data to outputs HC/HCT 365	C_L = 50 pF	2		105	130	160	ns
			4.5		21	26	32	ns
			6		18	22	27	ns
		C_L = 15 pF	5	8				ns
t_{PLH}, t_{PHL}	Propagation delay, data to outputs HC 366	C_L = 50 pF	2		110	140	165	ns
			4.5		22	28	33	ns
			6		19	24	28	ns
		C_L = 15 pF	5	9				ns
t_{PLH}, t_{PHL}	Propagation delay time, output enable and disable to outputs	C_L = 50 pF	2		150	190	225	ns
			4.5		30	38	45	ns
			6		26	33	38	ns
		C_L = 15 pF	5	12				ns
t_{TLH}, t_{THL}	Output transition time	C_L = 50 pF	2		60	75	90	ns
			4.5		12	15	18	ns
			6		10	13	15	ns
C_I	Input capacitance				10	10	10	pF
C_O	Three-state ouput capacitance				20	20	20	pF
C_{PD}	Power dissipation capacitance[1][2]		5	40				pF
HCT TYPES								
t_{PLH}, t_{PHL}	Propagation delay, data to outputs HC/HCT 365	C_L = 50 pF	4.5		25	31	38	ns ns
		C_L = 15 pF	5	9				ns ns
t_{PLH}, t_{PHL}	Propagation delay, data to outputs HC 366	C_L = 50 pF	4.5		27	34	41	ns
		C_L = 15 pF	5	11				ns
t_{PLH}, t_{PHL}	Propagation delay time, output enable and disable to ouputs	C_L = 50 pF	4.5		35	44	53	ns
		C_L = 15 pF	5	14				ns
t_{TLH}, t_{THL}	Output transition time	C_L = 50 pF	4.5		12	15	18	ns
C_{IN}	Input capacitance				10	10	10	pF
C_O	Three-stage capacitance				20	20	20	pF
C_{PD}	Power dissipation capacitance[1][2]		5	42				pF

(1) C_{PD} is used to determine the dynamic power consumption, per buffer.
(2) $P_D = V_{CC}{}^2 f_i (C_{PD} + C_I)$ where f_i = input frequency, C_L = output load capacitance, V_{CC} = supply voltage.

Copyright © 2022 Texas Instruments Incorporated

6 Parameter Measurement Information

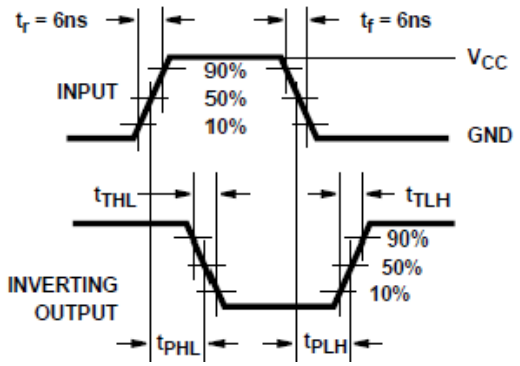

図 6-1. HC Transition Times and Propagation Delay Times, Combination Logic

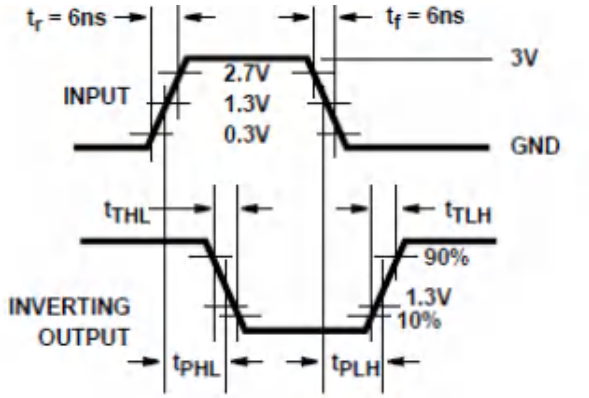

図 6-2. HCT Transition Times and Propagation Delay Times, Combination Logic

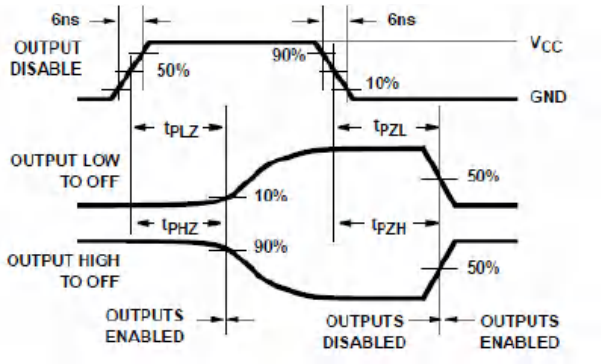

図 6-3. HC Three-State Propagation Delay Waveform

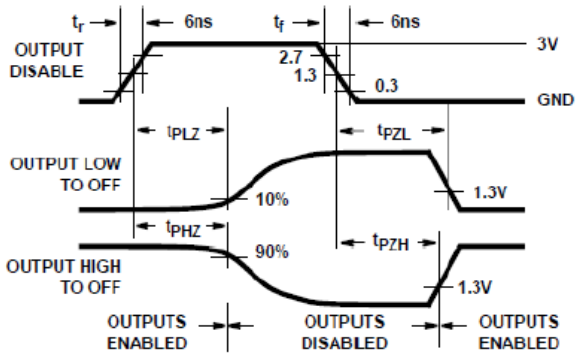

図 6-4. HCT Three-State Propagation Delay Waveform

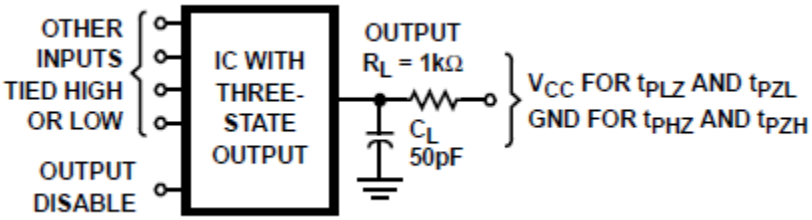

A. Open drain waveforms t_{PLZ} and t_{PZL} are the same as those for three-state shown on the left. The test circuit is output R_L = 1 kΩ to V_{CC}, C_L = 50 pF.

図 6-5. HC and HCT Three-State Propagation Delay Test Circuit

7 Detailed Description

7.1 Overview

The ’HC365, ’HCT365, and ’HC366 silicon gate CMOS three-state buffers are general purpose high-speed non-inverting and inverting buffers. They have high drive current outputs which enable high speed operation even when driving large bus capacitances. These circuits possess the low power dissipation of CMOS circuitry, yet have speeds comparable to low power Schottky TTL circuits. Both circuits are capable of driving up to 15 low power Schottky inputs.

The ’HC365 and ’HCT365 are non-inverting buffers, whereas the ’HC366 is an inverting buffer. These devices have two three-state control inputs ($\overline{OE1}$ and $\overline{OE2}$) which are NORed together to control all six gates.

The ’HCT365 logic families are speed, function and pin compatible with the standard LS logic family.

7.2 Functional Block Diagram

Functional Diagrams

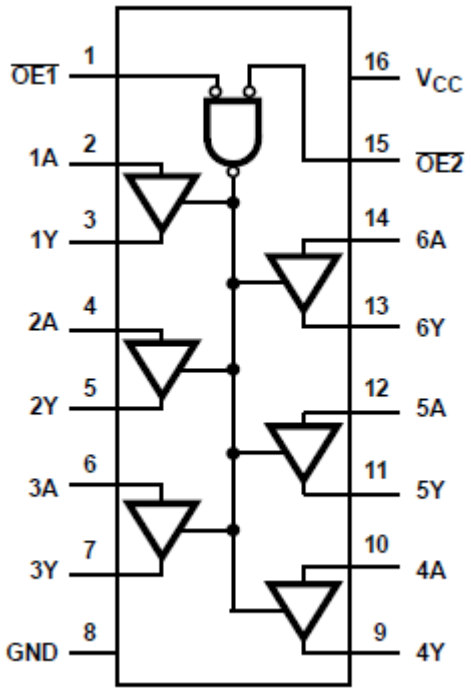

HC365, HCT365

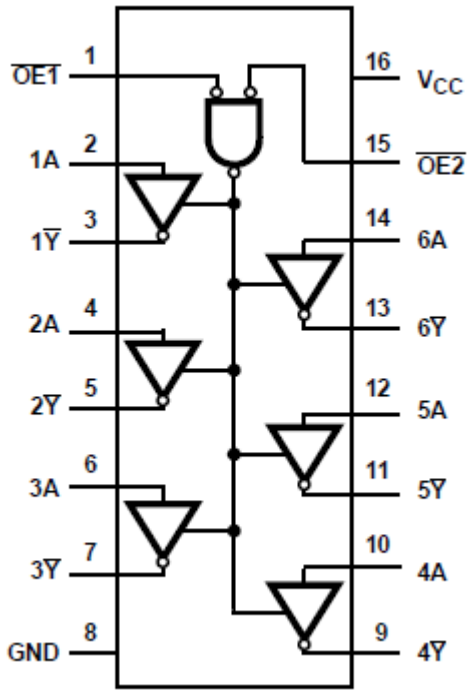

HC366

7.3 Device Functional Modes

表 7-1. Function Table

INPUTS[1]			OUTPUTS (Y)[2]	
$\overline{OE\ 1}$	$\overline{OE\ 2}$	A	HC/HCT 365	HCT 366
L	L	L	L	H
L	L	H	H	L
X	H	X	Z	Z
H	X	X	Z	Z

(1) H = High Voltage Level, L = Low Voltage Level, X = Don’t Care
(2) H = Driving High, L = Driving Low, Z = High Impedance State

Copyright © 2022 Texas Instruments Incorporated

8 Power Supply Recommendations

The power supply can be any voltage between the minimum and maximum supply voltage rating located in the *Recommended Operating Conditions*. Each V_{CC} terminal should have a good bypass capacitor to prevent power disturbance. A 0.1-µF capacitor is recommended for this device. It is acceptable to parallel multiple bypass caps to reject different frequencies of noise. The 0.1-µF and 1-µF capacitors are commonly used in parallel. The bypass capacitor should be installed as close to the power terminal as possible for best results.

9 Layout

9.1 Layout Guidelines

When using multiple-input and multiple-channel logic devices inputs must not ever be left floating. In many cases, functions or parts of functions of digital logic devices are unused; for example, when only two inputs of a triple-input AND gate are used or only 3 of the 4 buffer gates are used. Such unused input pins must not be left unconnected because the undefined voltages at the outside connections result in undefined operational states. All unused inputs of digital logic devices must be connected to a logic high or logic low voltage, as defined by the input voltage specifications, to prevent them from floating. The logic level that must be applied to any particular unused input depends on the function of the device. Generally, the inputs are tied to GND or V_{CC}, whichever makes more sense for the logic function or is more convenient.

Copyright © 2022 Texas Instruments Incorporated

10 Device and Documentation Support

TI offers an extensive line of development tools. Tools and software to evaluate the performance of the device, generate code, and develop solutions are listed below.

10.1 Receiving Notification of Documentation Updates

To receive notification of documentation updates, navigate to the device product folder on ti.com. Click on *Subscribe to updates* to register and receive a weekly digest of any product information that has changed. For change details, review the revision history included in any revised document.

10.2 サポート・リソース

TI E2E™ サポート・フォーラムは、エンジニアが検証済みの回答と設計に関するヒントをエキスパートから迅速かつ直接得ることができる場所です。既存の回答を検索したり、独自の質問をしたりすることで、設計で必要な支援を迅速に得ることができます。

リンクされているコンテンツは、該当する貢献者により、現状のまま提供されるものです。これらは TI の仕様を構成するものではなく、必ずしも TI の見解を反映したものではありません。TI の使用条件を参照してください。

10.3 Trademarks

TI E2E™ is a trademark of Texas Instruments.
すべての商標は、それぞれの所有者に帰属します。

10.4 Electrostatic Discharge Caution

This integrated circuit can be damaged by ESD. Texas Instruments recommends that all integrated circuits be handled with appropriate precautions. Failure to observe proper handling and installation procedures can cause damage.

ESD damage can range from subtle performance degradation to complete device failure. Precision integrated circuits may be more susceptible to damage because very small parametric changes could cause the device not to meet its published specifications.

10.5 Glossary

TI Glossary	This glossary lists and explains terms, acronyms, and definitions.

11 Mechanical, Packaging, and Orderable Information

The following pages include mechanical, packaging, and orderable information. This information is the most current data available for the designated devices. This data is subject to change without notice and revision of this document. For browser-based versions of this data sheet, refer to the left-hand navigation.

Copyright © 2022 Texas Instruments Incorporated

PACKAGING INFORMATION

Orderable part number	Status (1)	Material type (2)	Package | Pins	Package qty | Carrier	RoHS (3)	Lead finish/ Ball material (4)	MSL rating/ Peak reflow (5)	Op temp (°C)	Part marking (6)
CD54HC365F3A	Active	Production	CDIP (J) | 16	25 | TUBE	No	SNPB	N/A for Pkg Type	-55 to 125	8500101EA CD54HC365F3A
CD54HC365F3A.A	Active	Production	CDIP (J) | 16	25 | TUBE	No	SNPB	N/A for Pkg Type	-55 to 125	8500101EA CD54HC365F3A
CD54HC366F3A	Active	Production	CDIP (J) | 16	25 | TUBE	No	SNPB	N/A for Pkg Type	-55 to 125	5962-8682801EA CD54HC366F3A
CD54HC366F3A.A	Active	Production	CDIP (J) | 16	25 | TUBE	No	SNPB	N/A for Pkg Type	-55 to 125	5962-8682801EA CD54HC366F3A
CD54HCT365F3A	Active	Production	CDIP (J) | 16	25 | TUBE	No	SNPB	N/A for Pkg Type	-55 to 125	CD54HCT365F3A
CD54HCT365F3A.A	Active	Production	CDIP (J) | 16	25 | TUBE	No	SNPB	N/A for Pkg Type	-55 to 125	CD54HCT365F3A
CD74HC365E	Active	Production	PDIP (N) | 16	25 | TUBE	Yes	NIPDAU	N/A for Pkg Type	-55 to 125	CD74HC365E
CD74HC365E.A	Active	Production	PDIP (N) | 16	25 | TUBE	Yes	NIPDAU	N/A for Pkg Type	-55 to 125	CD74HC365E
CD74HC365M	Obsolete	Production	SOIC (D) | 16	-	-	Call TI	Call TI	-55 to 125	HC365M
CD74HC365M96	Last Time Buy	Production	SOIC (D) | 16	2500 | LARGE T&R	Yes	NIPDAU	Level-1-260C-UNLIM	-55 to 125	HC365M
CD74HC365M96.A	Last Time Buy	Production	SOIC (D) | 16	2500 | LARGE T&R	Yes	NIPDAU	Level-1-260C-UNLIM	-55 to 125	HC365M
CD74HC365MT	Obsolete	Production	SOIC (D) | 16	-	-	Call TI	Call TI	-55 to 125	HC365M
CD74HC366E	Active	Production	PDIP (N) | 16	25 | TUBE	Yes	NIPDAU	N/A for Pkg Type	-55 to 125	CD74HC366E
CD74HC366E.A	Active	Production	PDIP (N) | 16	25 | TUBE	Yes	NIPDAU	N/A for Pkg Type	-55 to 125	CD74HC366E
CD74HC366M	Obsolete	Production	SOIC (D) | 16	-	-	Call TI	Call TI	-55 to 125	HC366M
CD74HC366M96	Last Time Buy	Production	SOIC (D) | 16	2500 | LARGE T&R	Yes	NIPDAU	Level-1-260C-UNLIM	-55 to 125	HC366M
CD74HC366M96.A	Last Time Buy	Production	SOIC (D) | 16	2500 | LARGE T&R	Yes	NIPDAU	Level-1-260C-UNLIM	-55 to 125	HC366M
CD74HCT365E	Active	Production	PDIP (N) | 16	25 | TUBE	Yes	NIPDAU	N/A for Pkg Type	-55 to 125	CD74HCT365E
CD74HCT365E.A	Active	Production	PDIP (N) | 16	25 | TUBE	Yes	NIPDAU	N/A for Pkg Type	-55 to 125	CD74HCT365E
CD74HCT365M	Obsolete	Production	SOIC (D) | 16	-	-	Call TI	Call TI	-55 to 125	HCT365M
CD74HCT365M96	Active	Production	SOIC (D) | 16	2500 | LARGE T&R	Yes	NIPDAU | SN	Level-1-260C-UNLIM	-55 to 125	HCT365M
CD74HCT365M96.A	Active	Production	SOIC (D) | 16	2500 | LARGE T&R	Yes	NIPDAU	Level-1-260C-UNLIM	-55 to 125	HCT365M

(1) **Status:** For more details on status, see our product life cycle.

(2) **Material type:** When designated, preproduction parts are prototypes/experimental devices, and are not yet approved or released for full production. Testing and final process, including without limitation quality assurance, reliability performance testing, and/or process qualification, may not yet be complete, and this item is subject to further changes or possible discontinuation. If available for ordering, purchases will be subject to an additional waiver at checkout, and are intended for early internal evaluation purposes only. These items are sold without warranties of any kind.

(3) **RoHS values:** Yes, No, RoHS Exempt. See the TI RoHS Statement for additional information and value definition.

(4) **Lead finish/Ball material:** Parts may have multiple material finish options. Finish options are separated by a vertical ruled line. Lead finish/Ball material values may wrap to two lines if the finish value exceeds the maximum column width.

(5) **MSL rating/Peak reflow:** The moisture sensitivity level ratings and peak solder (reflow) temperatures. In the event that a part has multiple moisture sensitivity ratings, only the lowest level per JEDEC standards is shown. Refer to the shipping label for the actual reflow temperature that will be used to mount the part to the printed circuit board.

(6) **Part marking:** There may be an additional marking, which relates to the logo, the lot trace code information, or the environmental category of the part.

Multiple part markings will be inside parentheses. Only one part marking contained in parentheses and separated by a "~" will appear on a part. If a line is indented then it is a continuation of the previous line and the two combined represent the entire part marking for that device.

Important Information and Disclaimer: The information provided on this page represents TI's knowledge and belief as of the date that it is provided. TI bases its knowledge and belief on information provided by third parties, and makes no representation or warranty as to the accuracy of such information. Efforts are underway to better integrate information from third parties. TI has taken and continues to take reasonable steps to provide representative and accurate information but may not have conducted destructive testing or chemical analysis on incoming materials and chemicals. TI and TI suppliers consider certain information to be proprietary, and thus CAS numbers and other limited information may not be available for release.

In no event shall TI's liability arising out of such information exceed the total purchase price of the TI part(s) at issue in this document sold by TI to Customer on an annual basis.

OTHER QUALIFIED VERSIONS OF CD54HC365, CD54HC366, CD54HCT365, CD74HC365, CD74HC366, CD74HCT365 :

- Catalog : CD74HC365, CD74HC366, CD74HCT365
- Automotive : CD74HC366-Q1, CD74HC366-Q1
- Military : CD54HC365, CD54HC366, CD54HCT365

NOTE: Qualified Version Definitions:

- Catalog - TI's standard catalog product

- Automotive - Q100 devices qualified for high-reliability automotive applications targeting zero defects
- Military - QML certified for Military and Defense Applications

TAPE AND REEL INFORMATION

REEL DIMENSIONS

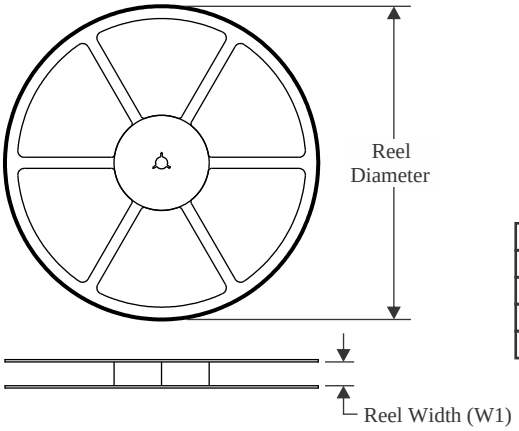

TAPE DIMENSIONS

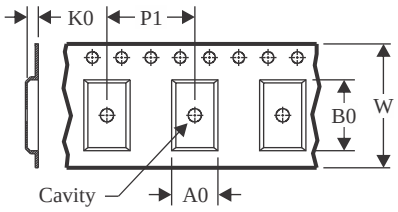

A0	Dimension designed to accommodate the component width
B0	Dimension designed to accommodate the component length
K0	Dimension designed to accommodate the component thickness
W	Overall width of the carrier tape
P1	Pitch between successive cavity centers

QUADRANT ASSIGNMENTS FOR PIN 1 ORIENTATION IN TAPE

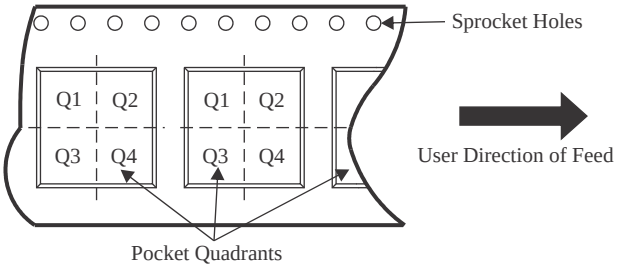

*All dimensions are nominal

Device	Package Type	Package Drawing	Pins	SPQ	Reel Diameter (mm)	Reel Width W1 (mm)	A0 (mm)	B0 (mm)	K0 (mm)	P1 (mm)	W (mm)	Pin1 Quadrant
CD74HC365M96	SOIC	D	16	2500	330.0	16.4	6.5	10.3	2.1	8.0	16.0	Q1
CD74HC366M96	SOIC	D	16	2500	330.0	16.4	6.5	10.3	2.1	8.0	16.0	Q1
CD74HCT365M96	SOIC	D	16	2500	330.0	16.4	6.5	10.3	2.1	8.0	16.0	Q1

TAPE AND REEL BOX DIMENSIONS

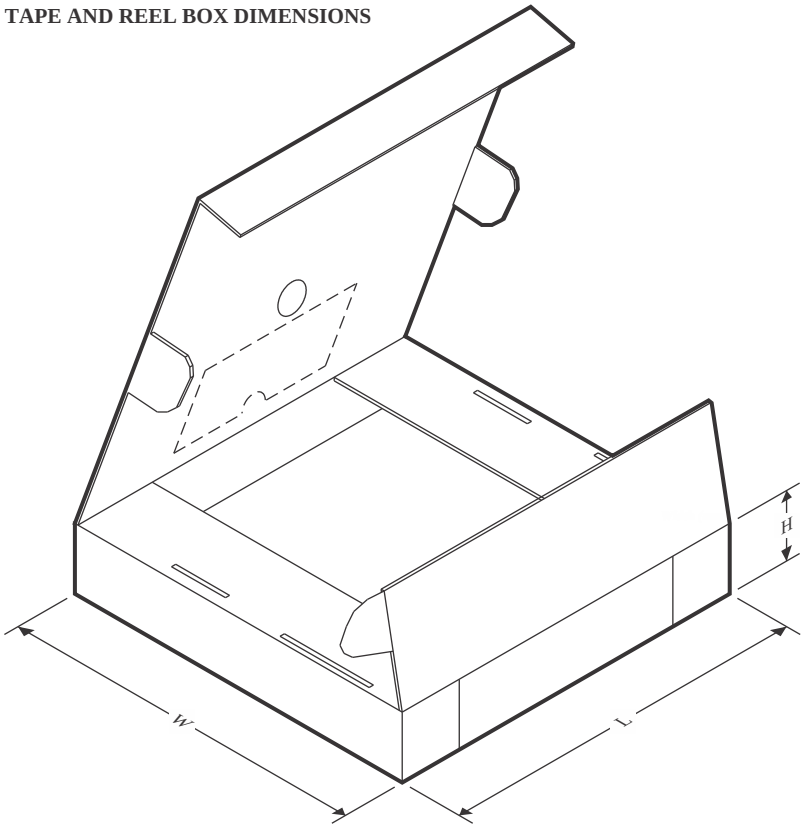

*All dimensions are nominal

Device	Package Type	Package Drawing	Pins	SPQ	Length (mm)	Width (mm)	Height (mm)
CD74HC365M96	SOIC	D	16	2500	353.0	353.0	32.0
CD74HC366M96	SOIC	D	16	2500	353.0	353.0	32.0
CD74HCT365M96	SOIC	D	16	2500	353.0	353.0	32.0

TUBE

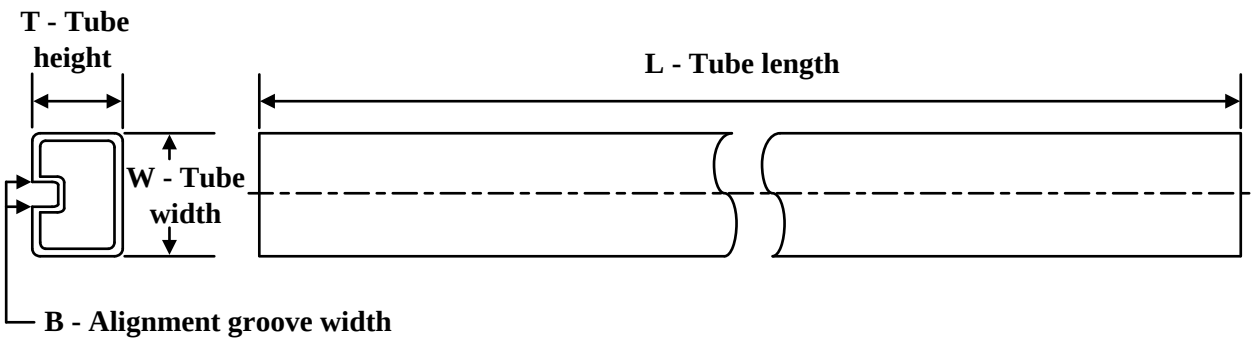

*All dimensions are nominal

Device	Package Name	Package Type	Pins	SPQ	L (mm)	W (mm)	T (µm)	B (mm)
CD74HC365E	N	PDIP	16	25	506	13.97	11230	4.32
CD74HC365E	N	PDIP	16	25	506	13.97	11230	4.32
CD74HC365E.A	N	PDIP	16	25	506	13.97	11230	4.32
CD74HC365E.A	N	PDIP	16	25	506	13.97	11230	4.32
CD74HC366E	N	PDIP	16	25	506	13.97	11230	4.32
CD74HC366E	N	PDIP	16	25	506	13.97	11230	4.32
CD74HC366E.A	N	PDIP	16	25	506	13.97	11230	4.32
CD74HC366E.A	N	PDIP	16	25	506	13.97	11230	4.32
CD74HCT365E	N	PDIP	16	25	506	13.97	11230	4.32
CD74HCT365E	N	PDIP	16	25	506	13.97	11230	4.32
CD74HCT365E.A	N	PDIP	16	25	506	13.97	11230	4.32
CD74HCT365E.A	N	PDIP	16	25	506	13.97	11230	4.32

J (R–GDIP–T**) CERAMIC DUAL IN–LINE PACKAGE

14 LEADS SHOWN

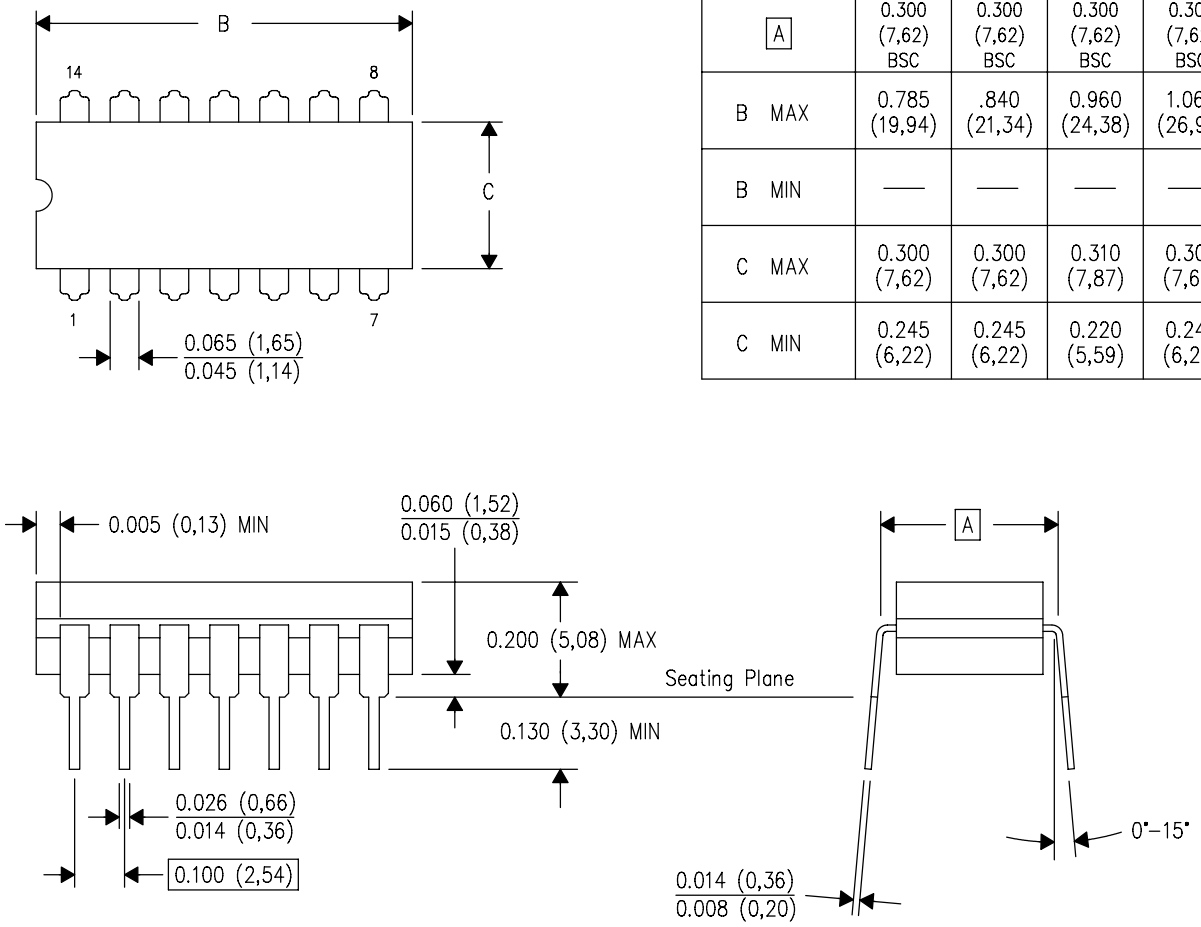

DIM \ PINS **	14	16	18	20
A	0.300 (7,62) BSC	0.300 (7,62) BSC	0.300 (7,62) BSC	0.300 (7,62) BSC
B MAX	0.785 (19,94)	.840 (21,34)	0.960 (24,38)	1.060 (26,92)
B MIN	—	—	—	—
C MAX	0.300 (7,62)	0.300 (7,62)	0.310 (7,87)	0.300 (7,62)
C MIN	0.245 (6,22)	0.245 (6,22)	0.220 (5,59)	0.245 (6,22)

4040083/F 03/03

NOTES:
- A. All linear dimensions are in inches (millimeters).
- B. This drawing is subject to change without notice.
- C. This package is hermetically sealed with a ceramic lid using glass frit.
- D. Index point is provided on cap for terminal identification only on press ceramic glass frit seal only.
- E. Falls within MIL STD 1835 GDIP1–T14, GDIP1–T16, GDIP1–T18 and GDIP1–T20.

N (R–PDIP–T**) PLASTIC DUAL–IN–LINE PACKAGE

16 PINS SHOWN

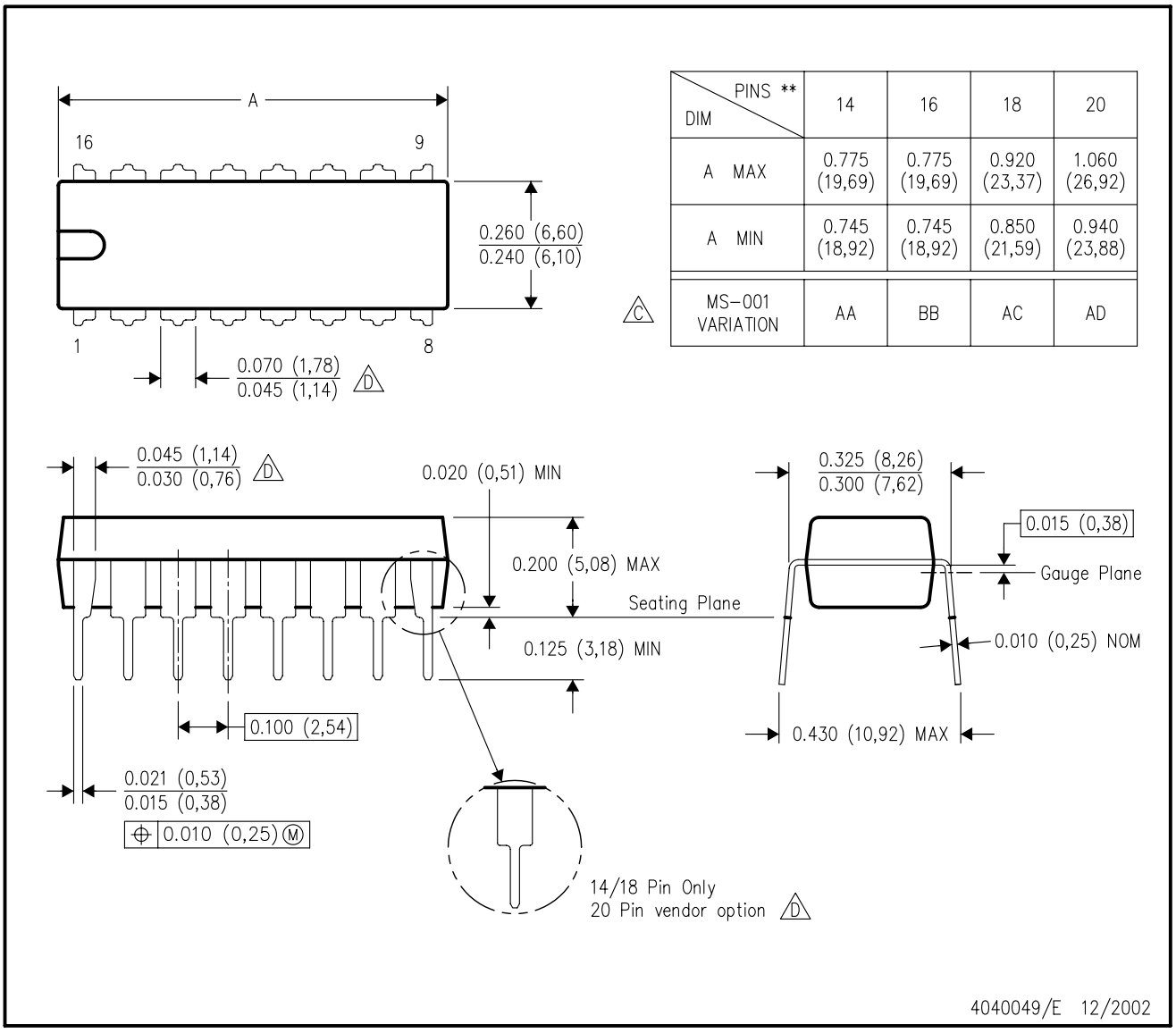

DIM \ PINS **	14	16	18	20
A MAX	0.775 (19,69)	0.775 (19,69)	0.920 (23,37)	1.060 (26,92)
A MIN	0.745 (18,92)	0.745 (18,92)	0.850 (21,59)	0.940 (23,88)
MS–001 VARIATION (C)	AA	BB	AC	AD

NOTES:
A. All linear dimensions are in inches (millimeters).
B. This drawing is subject to change without notice.
C. Falls within JEDEC MS–001, except 18 and 20 pin minimum body length (Dim A).
D. The 20 pin end lead shoulder width is a vendor option, either half or full width.

D (R–PDSO–G16) PLASTIC SMALL OUTLINE

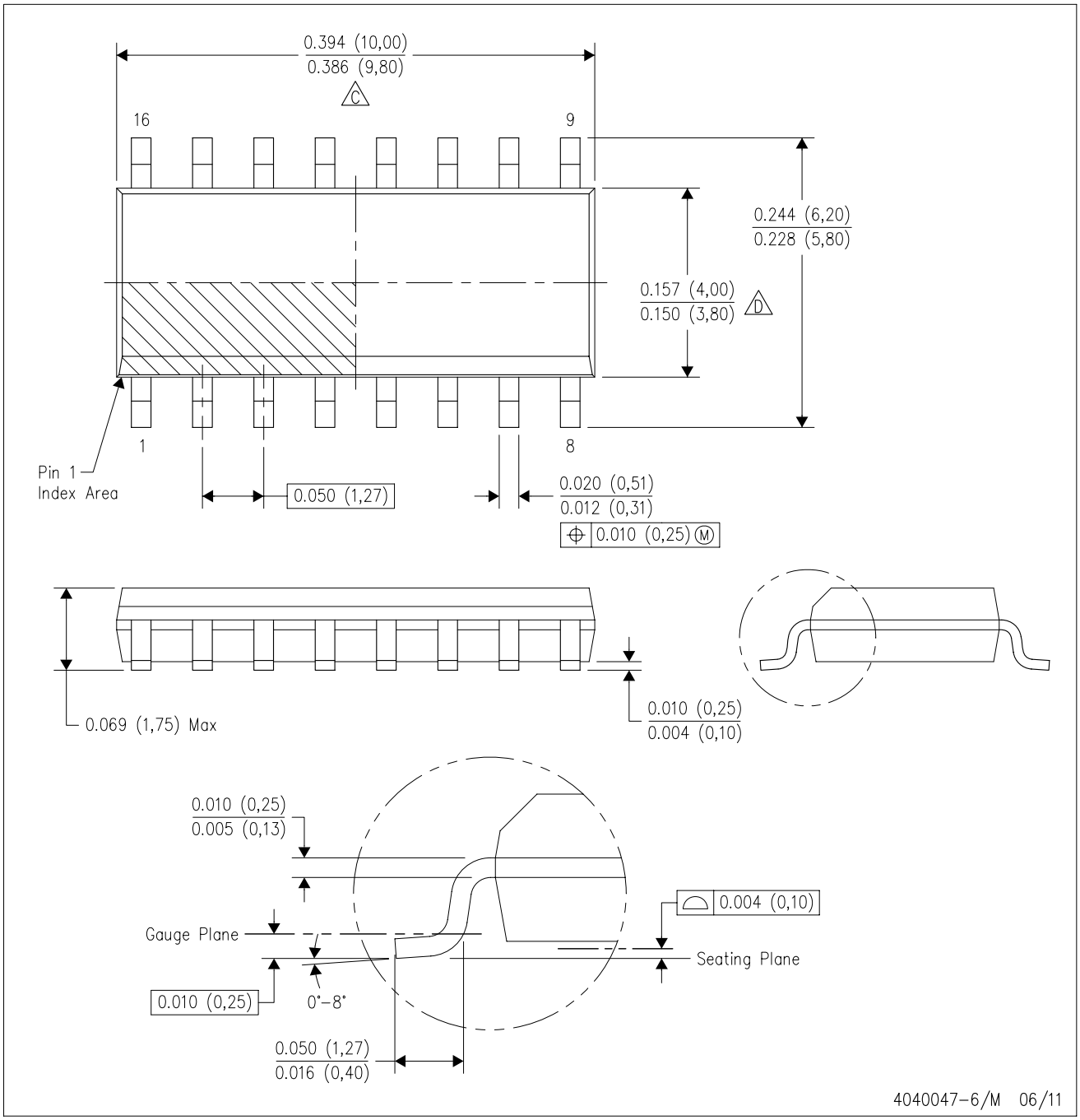

NOTES:
A. All linear dimensions are in inches (millimeters).
B. This drawing is subject to change without notice.
C. Body length does not include mold flash, protrusions, or gate burrs. Mold flash, protrusions, or gate burrs shall not exceed 0.006 (0,15) each side.
D. Body width does not include interlead flash. Interlead flash shall not exceed 0.017 (0,43) each side.
E. Reference JEDEC MS–012 variation AC.

重要なお知らせと免責事項

TI は、技術データと信頼性データ (データシートを含みます)、設計リソース (リファレンス デザインを含みます)、アプリケーションや設計に関する各種アドバイス、Web ツール、安全性情報、その他のリソースを、欠陥が存在する可能性のある「現状のまま」提供しており、商品性および特定目的に対する適合性の黙示保証、第三者の知的財産権の非侵害保証を含むいかなる保証も、明示的または黙示的にかかわらず拒否します。

これらのリソースは、TI 製品を使用する設計の経験を積んだ開発者への提供を意図したものです。(1) お客様のアプリケーションに適した TI 製品の選定、(2) お客様のアプリケーションの設計、検証、試験、(3) お客様のアプリケーションに該当する各種規格や、その他のあらゆる安全性、セキュリティ、規制、または他の要件への確実な適合に関する責任を、お客様のみが単独で負うものとします。

上記の各種リソースは、予告なく変更される可能性があります。これらのリソースは、リソースで説明されている TI 製品を使用するアプリケーションの開発の目的でのみ、TI はその使用をお客様に許諾します。これらのリソースに関して、他の目的で複製することや掲載することは禁止されています。TI や第三者の知的財産権のライセンスが付与されている訳ではありません。お客様は、これらのリソースを自身で使用した結果発生するあらゆる申し立て、損害、費用、損失、責任について、TI およびその代理人を完全に補償するものとし、TI は一切の責任を拒否します。

TI の製品は、 TI の販売条件 、 TI の総合的な品質ガイドライン 、 ti.com または TI 製品などに関連して提供される他の適用条件に従い提供されます。TI がこれらのリソースを提供することは、適用される TI の保証または他の保証の放棄の拡大や変更を意味するものではありません。 TI がカスタム、またはカスタマー仕様として明示的に指定していない限り、TI の製品は標準的なカタログに掲載される汎用機器です。

お客様がいかなる追加条項または代替条項を提案する場合も、TI はそれらに異議を唱え、拒否します。

Copyright © 2026, Texas Instruments Incorporated

最終更新日：2025 年 10 月