INA231 28V、16 ビット、I²C 出力電流 / 電圧 / 電力モニタ、アラート搭載、WCSP パッケージ

1 特長

- 0V～28V のバス電圧センシング
- ハイサイドまたはローサイドのセンシング
- 電流、電圧、電力を報告
- 高精度:
  - ゲイン誤差:0.5% (最大値)
  - オフセット:50μV (最大値)
- 平均化オプションを構成可能
- プログラム可能なアラート・スレッショルド
- 1.8V I²C 準拠
- 電源動作:2.7V～5.5V
- スタートアップ・モードのオプション:
  - INA231A:アクティブ変換
  - INA231B:低消費電流パワー・ダウン

2 アプリケーション

- スマートフォン
- タブレット
- サーバー
- コンピュータ
- パワー・マネージメント
- バッテリ・チャージャ
- 電源
- 試験用機器

3 概要

INA231 は 1.8V I²C 準拠 インターフェイス付きの電流シャント/電力モニタで、16 個のプログラマブル・アドレスを備えています。INA231 はシャント電圧降下とバス電源電圧の両方を監視し、その値がプログラムされた範囲を外れたときは ALERT ピンをアサートして、保護を強化します。較正値、変換時間、平均化オプションをプログラム可能で、内蔵のマルチプライヤと組み合わせて電流のアンペア値や電力のワット値を直接読み出すことができ、ホストの処理が軽減されます。

INA231 は 0V～28V のバス電圧上で電流を検出します。デバイスは単一の 2.7V～5.5V 電源で動作し、消費電流は 330μA (標準値) です。INA231 は、-40℃～+125℃ の温度範囲で動作が規定されています。

INA231 には 2 つのバージョンがあり、INA231A はスタートアップ時からシャントおよびバス電圧の連続変換を実行し、INA231B は低消費電流のパワー・ダウン・モードでスタートアップします。

パッケージ情報(1)

部品番号	パッケージ	本体サイズ (公称)
INA231A	YFF (DSBGA-12)	1.65mm × 1.39mm × 0.62mm
	YFD (DSBGA-12)	1.65mm × 1.39mm × 0.40mm
INA231B	YFD (DSBGA-12)	1.65mm × 1.39mm × 0.40mm

(1) 利用可能なすべてのパッケージについては、このデータシートの末尾にあるパッケージ・オプションについての付録を参照してください。

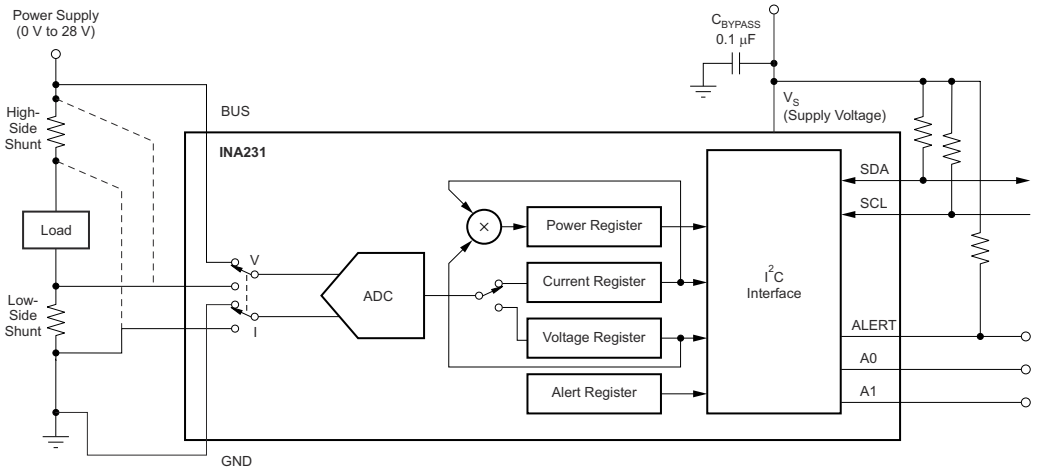

ハイサイドまたはローサイド・センシング

英語版の TI 製品についての情報を翻訳したこの資料は、製品の概要を確認する目的で便宜的に提供しているものです。該当する正式な英語版の最新情報は、www.ti.com で閲覧でき、その内容が常に優先されます。TI では翻訳の正確性および妥当性につきましては一切保証いたしません。実際の設計などの前には、必ず最新版の英語版をご参照くださいますようお願いいたします。

Table of Contents

1 特長 ... 1
2 アプリケーション ... 1
3 概要 ... 1
4 Revision History ... 2
5 Device Comparison ... 3
6 Pin Configuration and Functions ... 3
7 Specifications ... 4
7.1 Absolute Maximum Ratings ... 4
7.2 ESD Ratings ... 4
7.3 Recommended Operating Conditions ... 4
7.4 Thermal Information ... 4
7.5 Electrical Characteristics ... 5
7.6 Timing Requirements: I²C Bus ... 6
7.7 Typical Characteristics ... 7
8 Detailed Description ... 10
8.1 Overview ... 10
8.2 Functional Block Diagram ... 10
8.3 Feature Description ... 10
8.4 Device Functional Modes ... 14
8.5 Programming ... 15
8.6 Register Maps ... 22
9 Application and Implementation ... 28
9.1 Application Information ... 28
9.2 Typical Applications ... 30
9.3 Power Supply Recommendations ... 31
9.4 Layout ... 31
10 Device and Documentation Support ... 33
10.1 Documentation Support ... 33
10.2 Receiving Notification of Documentation Updates ... 33
10.3 サポート・リソース ... 33
10.4 Trademarks ... 33
10.5 Electrostatic Discharge Caution ... 33
10.6 Glossary ... 33
11 Mechanical, Packaging, and Orderable Information ... 33

4 Revision History

資料番号末尾の英字は改訂を表しています。その改訂履歴は英語版に準じています。

Changes from Revision C (March 2018) to Revision D (July 2022) — **Page**

- 文書全体にわたって表、図、相互参照の採番方法を更新 ... 1
- Added footnote to B2 and C2 pins ... 3
- Changed value from 40 ms to 40 µs in sentence: Full recovery from power-down mode requires 40 µs ... 10
- Moved the *Power Supply Recommendations* and *Layout* sections to the *Application and Implementation* section ... 31

Changes from Revision B (August 2017) to Revision C (March 2018) — **Page**

- B バージョンのデバイスおよび関連する内容を追加 ... 1

Changes from Revision A (June 2017) to Revision B (August 2017) — **Page**

- Changed NC pin description from "No internal connection" to "Do not connect, leave floating" ... 3
- Changed SCL max value from V_S + 0.3 V to 6 V in *Absolute Maximum Ratings* table ... 4
- Added text to end of *Layout Guidelines* section clarifying no connection of NC pins ... 31

Changes from Revision * (February 2013) to Revision A (June 2017) — **Page**

- 「製品情報」表、「推奨動作条件」表、「ESD 定格」表、「詳細説明」セクション、「アプリケーションと実装」セクション、「電源に関する推奨事項」セクション、「レイアウト」セクション、「デバイスおよびドキュメントのサポート」セクション、「メカニカル、パッケージ、および注文情報」セクションを追加 ... 1
- 新しい WSCP-12 (YFD) パッケージ (パッケージの高さ 0.4mm) および関連する内容をデータシートに追加 ... 1
- Added operating ambient temperature, T_A to *Absolute Maximum Ratings* table ... 4
- Added new note 1 to *Timing Requirements: I2C Bus* section ... 6
- Added test condition to Figure 2 ... 7

Copyright © 2022 Texas Instruments Incorporated

5 Device Comparison

表 5-1. Device Comparison

DEVICE	DESCRIPTION
INA209	Current and power monitor with watchdog, peak-hold, and fast comparator functions
INA210, INA211, INA212, INA213, INA214, INA215	Zerø-drift, low-cost, analog current shunt monitor series in small package
INA219	Zerø-drift, bidirectional current power monitor with two-wire interface
INA226	High or Low-side, bidirectional current and power monitor with two-wire interface and programmable alert

6 Pin Configuration and Functions

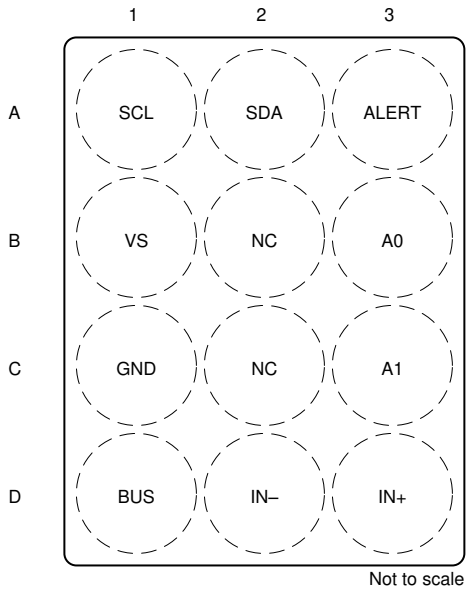

図 6-1. YFF and YFD Packages 12-Pin DSBGA Top View

表 6-1. Pin Functions

PIN		TYPE	DESCRIPTION
NAME	NO.		
A0	B3	Digital input	Address pin. Connect to GND, SCL, SDA, or V_S. 表 8-2 shows pin settings and corresponding addresses.
A1	C3	Digital input	Address pin. Connect to GND, SCL, SDA, or V_S. 表 8-2 shows pin settings and corresponding addresses.
ALERT	A3	Digital output	Multi-functional alert, open-drain output.
GND	C1	Analog	Ground
NC	B2, C2(1)	—	Do not connect, leave floating.
SCL	A1	Digital input	Serial bus clock line, open-drain input.
SDA	A2	Digital input/ output	Serial bus data line, open-drain input/output.
BUS	D1	Analog input	Bus voltage input.
IN–	D2	Analog input	Negative differential shunt voltage input. Connect to load side of shunt resistor.
IN+	D3	Analog input	Positive differential shunt voltage input. Connect to supply side of shunt resistor.
VS	B1	Analog	Power supply pin, 2.7 V to 5.5 V.

(1) Internally, B2 is connected to V_S and C2 is connected to GND. Leave floating.

7 Specifications

7.1 Absolute Maximum Ratings

over operating free-air temperature range (unless otherwise noted)[1]

		MIN	MAX	UNIT
Supply voltage, V_S			6	V
Analog inputs, IN+, IN–	Differential (V_{IN+}) – (V_{IN-})[2]	–30	30	V
	Common-mode	–0.3	30	V
SDA		GND – 0.3	6	V
SCL		GND – 0.3	6	V
Input current into any pin			5	mA
Open-drain digital output current			10	mA
Operating ambient temperature, T_A		–40	125	°C
Junction temperature, T_J			150	°C
Storage temperature, T_{stg}		–65	150	°C

(1) Stresses beyond those listed under *Absolute Maximum Ratings* may cause permanent damage to the device. These are stress ratings only, which do not imply functional operation of the device at these or any other conditions beyond those indicated under *Recommended Operating Conditions*. Exposure to absolute-maximum-rated conditions for extended periods may affect device reliability.
(2) V_{IN+} and V_{IN-} may have a differential voltage of –30 V to +30 V; however, the voltage at these pins must not exceed the range –0.3 V to +30 V.

7.2 ESD Ratings

			VALUE	UNIT
$V_{(ESD)}$	Electrostatic discharge	Human body model (HBM), per ANSI/ESDA/JEDEC JS-001, all pins[1]	2500	V
		Charged device model (CDM), per JEDEC specification JESD22-C101, all pins[2]	1000	
		Machine model (MM)	150	

(1) JEDEC document JEP155 states that 500-V HBM allows safe manufacturing with a standard ESD control process.
(2) JEDEC document JEP157 states that 250-V CDM allows safe manufacturing with a standard ESD control process.

7.3 Recommended Operating Conditions

		MIN	NOM	MAX	UNIT
V_{CM}	Common-mode voltage	0		28	V
V_S	Operating supply voltage	2.7		5.5	V
T_A	Operating ambient temperature	–40		125	°C

7.4 Thermal Information

THERMAL METRIC[1]		INA231		UNIT
		YFD (DSBGA)	YFF (DSBGA)	
		12 PINS	12 PINS	
$R_{\theta JA}$	Junction-to-ambient thermal resistance	83.8	90.2	°C/W
$R_{\theta JC(top)}$	Junction-to-case (top) thermal resistance	0.4	0.5	°C/W
$R_{\theta JB}$	Junction-to-board thermal resistance	19.3	40.0	°C/W
ψ_{JT}	Junction-to-top characterization parameter	0.3	3.0	°C/W
ψ_{JB}	Junction-to-board characterization parameter	19.4	39.2	°C/W
$R_{\theta JC(bot)}$	Junction-to-case (bottom) thermal resistance	N/A	N/A	°C/W

(1) For more information about traditional and new thermal metrics, see the *Semiconductor and IC Package Thermal Metrics* application report.

Copyright © 2022 Texas Instruments Incorporated

7.5 Electrical Characteristics

at T_A = 25°C, V_S = 3.3 V, V_{IN+} = 12 V, V_{SENSE} = (V_{IN+} – $V_{IN–}$) = 0 mV, and V_{BUS} = 12 V (unless otherwise noted)

PARAMETER		TEST CONDITIONS	MIN	TYP	MAX	UNIT
SHUNT INPUT						
	Shunt voltage input		–81.92		81.9175	mV
CMR	Common-mode rejection	V_{IN+} = 0 V to 28 V	100	120		dB
V_{OS}	Shunt offset voltage, RTI[(1)]			±10	±50	µV
		T_A = –40°C to +125°C		0.1	0.5	µV/°C
PSRR	vs power supply	V_S = 2.7 V to 5.5 V		10		µV/V
BUS INPUT						
	Bus voltage input range[(2)]		0		28	V
V_{OS}	Bus offset voltage, RTI[(1)]			±5	±30	mV
		T_A = –40°C to +125°C		10	40	µV/°C
PSRR	vs power supply			2		mV/V
	BUS pin input impedance			830		kΩ
INPUT						
I_{IN+}, I_{IN-}	Input bias current			10		µA
	Input leakage[(3)]	(V_{IN+}) + ($V_{IN–}$), Power-Down mode		0.1	0.5	µA
DC ACCURACY						
	ADC native resolution			16		Bits
	1 LSB step size	Shunt voltage		2.5		µV
		Bus voltage		1.25		mV
	Shunt voltage gain error			0.2%	0.5%	
		T_A = –40°C to +125°C		10	50	ppm/°C
	Bus voltage gain error			0.2%	0.5%	
		T_A = –40°C to +125°C		10	50	ppm/°C
	Differential nonlinearity			±0.1		LSB
	ADC conversion time	CT bit = 000		140	154	µs
		CT bit = 001		204	224	µs
		CT bit = 010		332	365	µs
		CT bit = 011		588	646	µs
		CT bit = 100		1.1	1.21	ms
		CT bit = 101		2.116	2.328	ms
		CT bit = 110		4.156	4.572	ms
		CT bit = 111		8.244	9.068	ms
SMBus						
	SMBus timeout[(4)]			28	35	ms
DIGITAL INPUT/OUTPUT						
	Input capacitance			3		pF
	Leakage input current	0 ≤ V_{IN} ≤ V_S		0.5	2	µA
V_{IH}	High-level input voltage		1.4		6	V
V_{IL}	Low-level input voltage		–0.5		0.4	V
V_{OL}	Low-level output voltage (SDA, ALERT)	I_{OL} = 3 mA	0		0.4	V
	Hysteresis			500		mV
POWER SUPPLY						
	Quiescent current			330	420	µA
		Power-Down mode		3	7	µA
	Power-on reset threshold			2		V

(1) RTI = Referred-to-input.
(2) Although the input range is 28 V, the full-scale range of the ADC scaling is 40.96 V. Do not apply more than 28 V. See the *Basic Analog-to-Digital Converter (ADC) Functions* section for more details

(3) Input leakage is positive (current flowing into the pin) for the conditions shown at the top of this table. Negative leakage currents can occur under different input conditions.
(4) SMBus timeout in the INA231 resets the interface any time SCL is low for more than 28 ms.

7.6 Timing Requirements: I²C Bus

see [(1)]

			FAST MODE			HIGH-SPEED MODE			UNIT
			MIN	TYP	MAX	MIN	TYP	MAX	
$f_{(SCL)}$	SCL operating frequency	INA231A	0.001		0.4	0.001		2.5	MHz
		INA231B	0.01		0.4	0.01		2.5	
$t_{(BUF)}$	Bus free time between stop and start conditions		600			260			ns
$t_{(HDSTA)}$	Hold time after repeated START condition. After this period, the first clock is generated.		100			100			ns
$t_{(SUSTA)}$	Repeated start condition setup time		100			100			ns
$t_{(SUSTO)}$	STOP condition setup time		100			100			ns
$t_{(HDDAT)}$	Data hold time, $V_S \leq 3.3$ V		0			0		130	ns
$t_{(HDDAT)}$	Data hold time, $V_S > 3.3$ V		10			10		130	ns
$t_{(SUDAT)}$	Data setup time		100			50			ns
$t_{(LOW)}$	SCL clock low period		1300			260			ns
$t_{(HIGH)}$	SCL clock high period		600			60			ns
t_F	Data fall time				300			80	ns
t_R	Data rise time				300			80	ns
t_F	Clock fall time				300			40	ns
t_R	Clock rise time				300			40	ns
t_R	Clock/data rise time for SCLK ≤ 100 kHz				1000				ns

(1) Values based on a statistical analysis of a one-time sample of devices. Minimum and maximum values are specified by design, but not production tested.

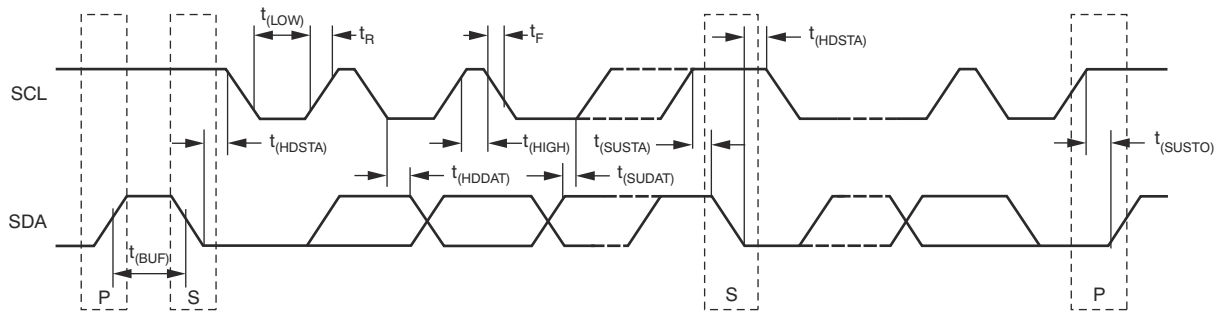

図 7-1. Bus Timing Diagram

Copyright © 2022 Texas Instruments Incorporated

7.7 Typical Characteristics

at T_A = 25°C, V_S = 3.3 V,V_{IN+} = 12 V, V_{SENSE} = (V_{IN+} – $V_{IN–}$) = 0 mV, and V_{BUS} = 12 V (unless otherwise noted)

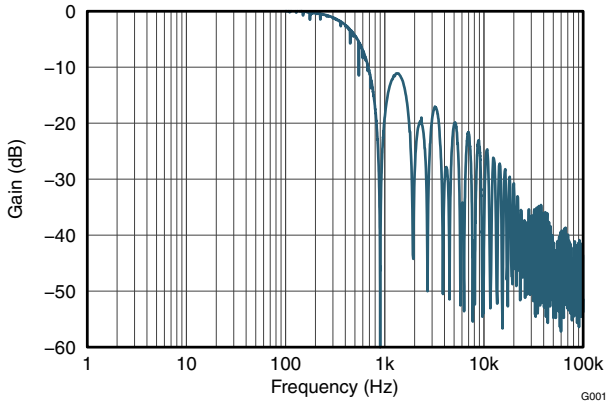

Conversion time = 1.1 ms

図 7-2. Frequency Response

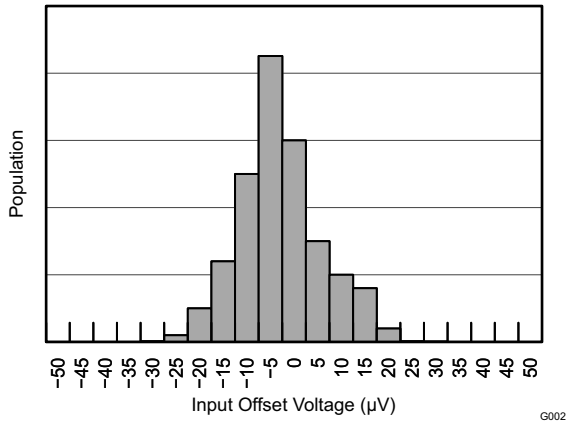

図 7-3. Shunt Input Offset Voltage Production Distribution

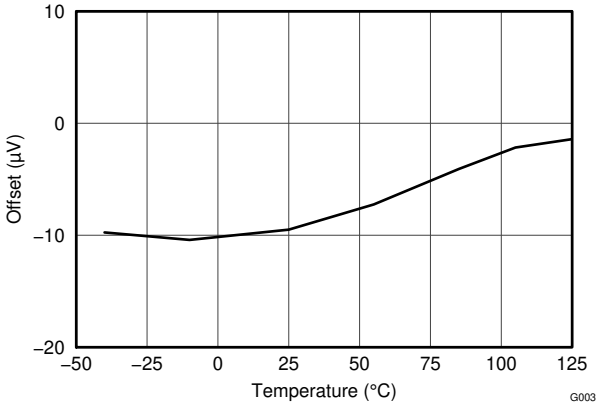

図 7-4. Shunt Input Offset Voltage vs Temperature

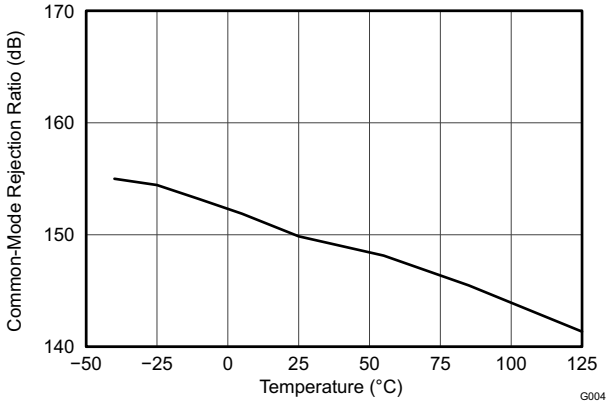

図 7-5. Shunt Input Common-Mode Rejection Ratio vs Temperature

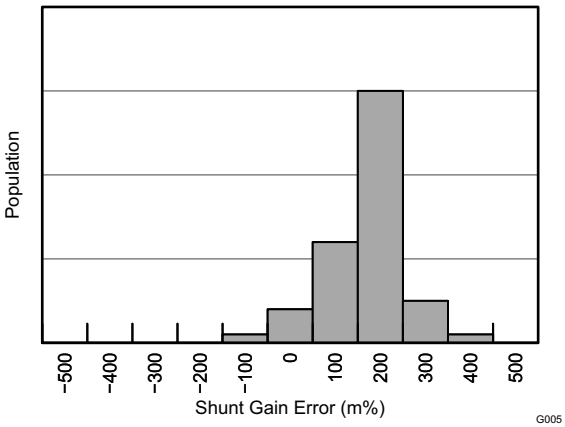

図 7-6. Shunt Input Gain Error Production Distribution

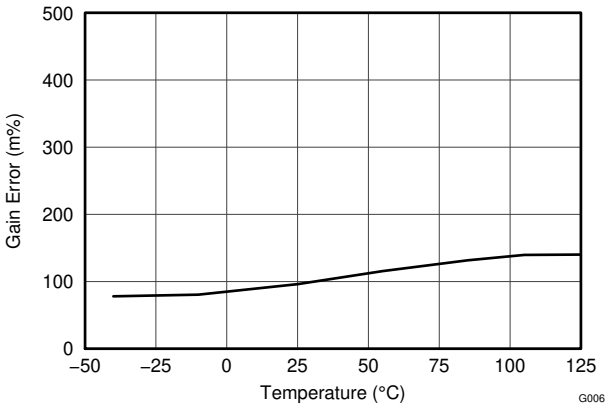

図 7-7. Shunt Input Gain Error vs Temperature

7.7 Typical Characteristics (continued)

at T_A = 25°C, V_S = 3.3 V,V_{IN+} = 12 V, V_{SENSE} = (V_{IN+} – $V_{IN–}$) = 0 mV, and V_{BUS} = 12 V (unless otherwise noted)

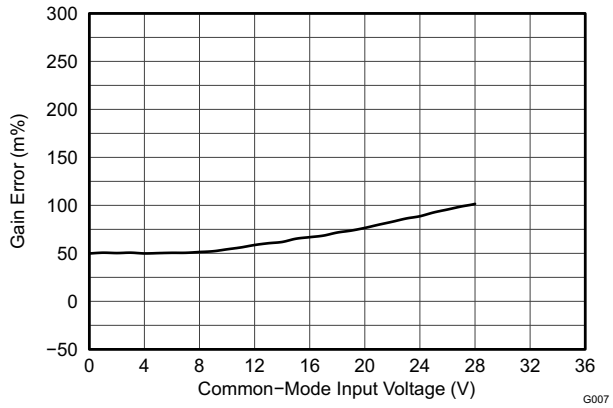

図 7-8. Shunt Input Gain Error vs Common-Mode Voltage

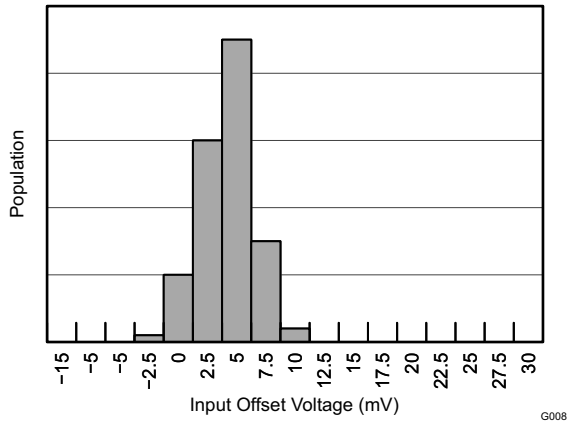

図 7-9. Bus Input Offset Voltage Production Distribution

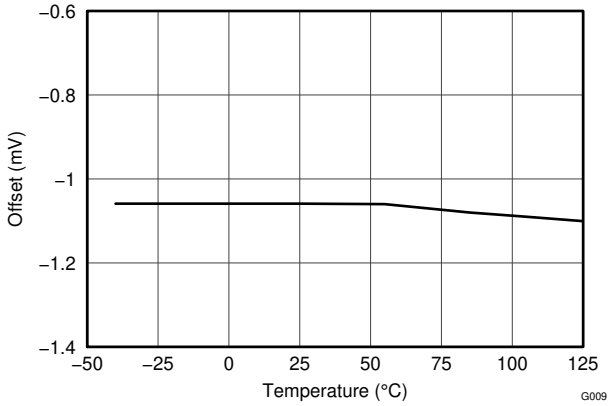

図 7-10. Bus Input Offset Voltage vs Temperature

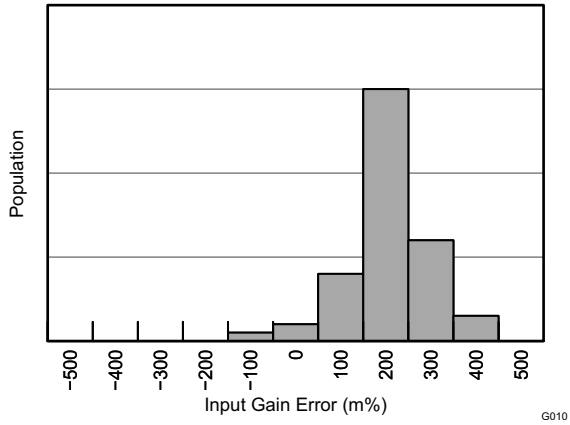

図 7-11. Bus Input Gain Error Production Distribution

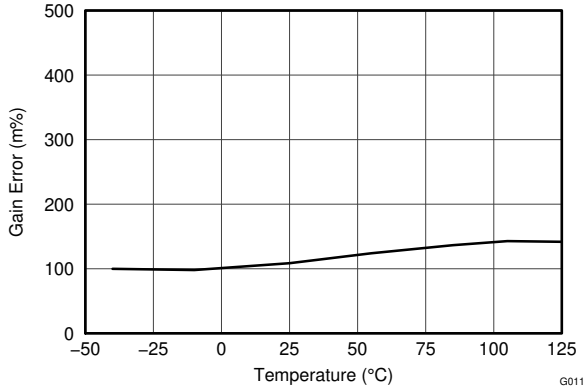

図 7-12. Bus Input Gain Error vs Temperature

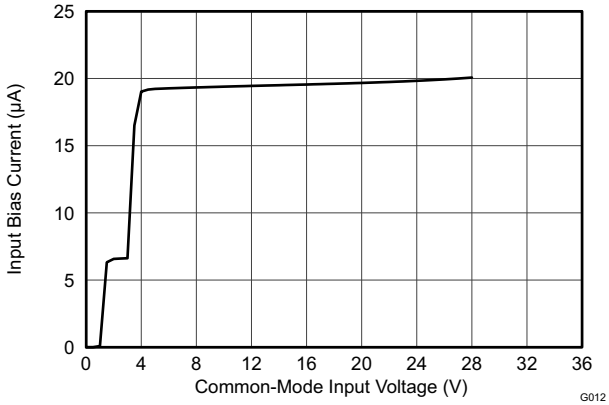

図 7-13. Input Bias Current vs Common-Mode Voltage

Copyright © 2022 Texas Instruments Incorporated

7.7 Typical Characteristics (continued)

at T_A = 25°C, V_S = 3.3 V,V_{IN+} = 12 V, V_{SENSE} = (V_{IN+} – $V_{IN–}$) = 0 mV, and V_{BUS} = 12 V (unless otherwise noted)

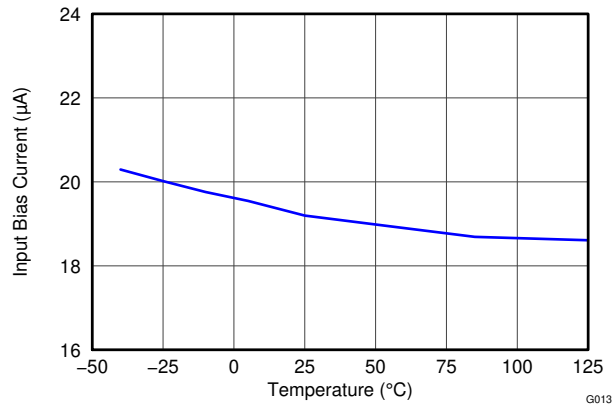

図 7-14. Input Bias Current vs Temperature

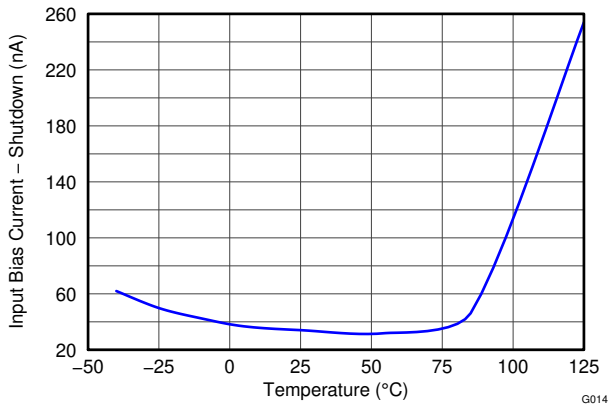

図 7-15. Input Bias Current vs Temperature, Shutdown

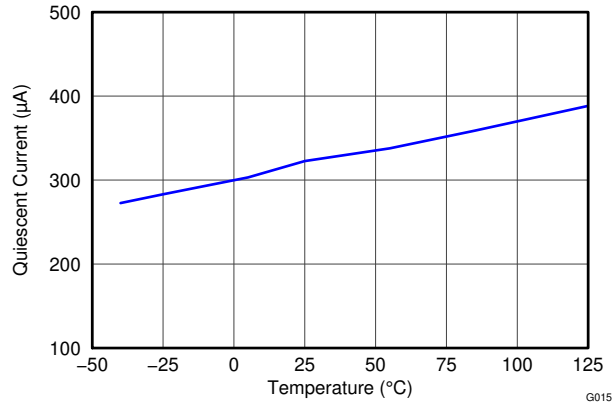

図 7-16. Active I_Q vs Temperature

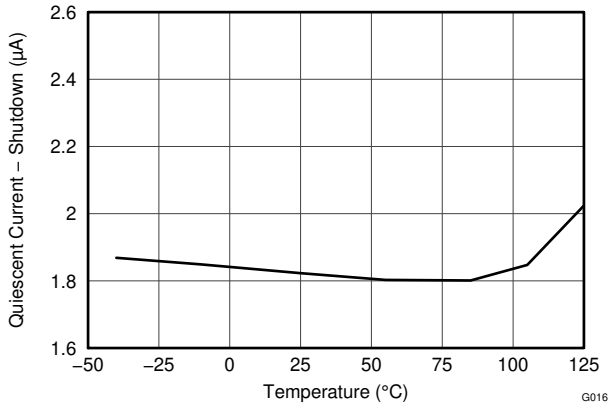

図 7-17. Shutdown I_Q vs Temperature

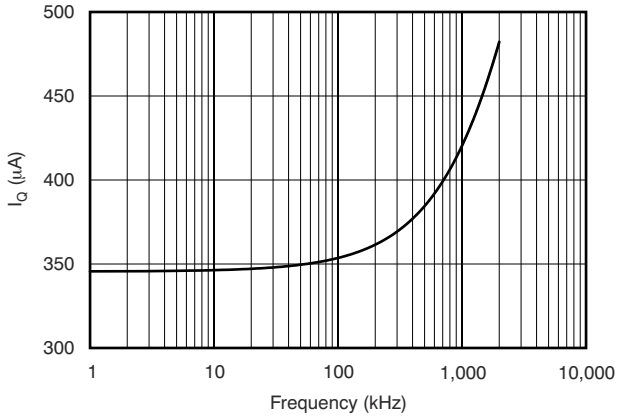

図 7-18. Active I_Q vs I^2C Clock Frequency

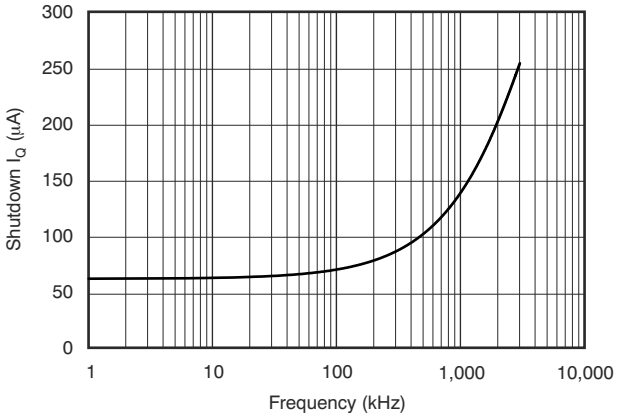

図 7-19. Shutdown I_Q vs I^2C Clock Frequency

8 Detailed Description

8.1 Overview

The INA231 is a digital, current-sense amplifier with an I^{2}C- and SMBus-compatible interface. It provides digital current, voltage, and power readings necessary for accurate decision-making in precisely controlled systems. Programmable registers allow flexible configuration for measurement resolution, as well as continuous-versus-triggered operation. Detailed register information is shown in the *Register Maps* section. See the *Functional Block Diagram* section for a block diagram of the INA231 device.

8.2 Functional Block Diagram

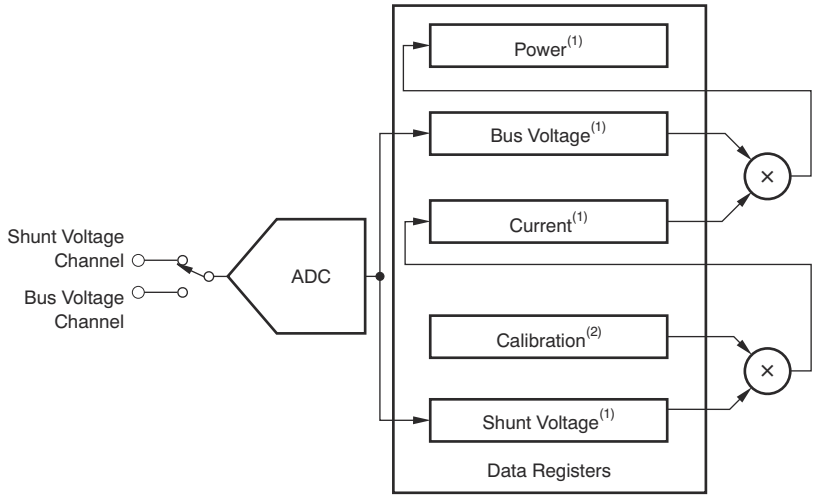

A. Read-only
B. Read/write

図 8-1. Functional Block Diagram

8.3 Feature Description

8.3.1 Basic Analog-to-Digital Converter (ADC) Functions

The INA231 performs two measurements on the power-supply bus of interest. The voltage developed from the load current that flows through a shunt resistor creates the shunt voltage signal that is measured at the IN+ and IN– pins. The device can also measure the power supply bus voltage by connecting this voltage to the BUS pin. The differential shunt voltage is measured with respect to the IN– pin whereas the bus voltage is measured with respect to ground.

The INA231 is typically powered by a separate supply that can range from 2.7 V to 5.5 V. The bus that is being monitored can range in voltage from 0 V to 28 V.

注

Based on the fixed 1.25 mV LSB for the bus voltage register, a full-scale register would result in a 40.96-V value. However, the actual voltage that is applied to the input pins of the INA231 should not exceed 28 V.

There are no special considerations for power-supply sequencing because the common-mode input range and power-supply voltage are independent of each other; therefore, the bus voltage can be present with the supply voltage off, and vice-versa.

As noted, the INA231 takes two measurements, shunt voltage and bus voltage. It then converts these measurements to current, based on the Calibration register value, and then calculates power. See the *Configure, Measure, and Calculate Example* section for additional information on programming the calibration register.

Copyright © 2022 Texas Instruments Incorporated

The INA231 has two operating modes, continuous and triggered, that determine how the ADC operates after these conversions. When the INA231 is in the normal operating mode (that is, the MODE bits of the Configuration register are set to '111'), it continuously converts a shunt voltage reading followed by a bus voltage reading. After the shunt voltage reading, the current value is calculated based on 式 3. This current value is then used to calculate the power result using 式 4. These values are subsequently stored in an accumulator, and the measurement and calculation sequence repeats until the number of averages set in the Configuration register is reached. Note that the current and power calculations are based on the value programmed into the Calibration register. If the Calibration register is not programmed, the result of the current and power calculations is zero. Following every sequence, the present set of measured and calculated values are appended to the previously collected values. After all of the averaging has been completed, the final values for shunt voltage, bus voltage, current, and power are updated in the corresponding registers and can then be read. These values remain in the data output registers until they are replaced by the next fully completed conversion results. Reading the data output registers does not affect a conversion in progress.

The mode control bits in the Configuration register also permit selecting specific modes to convert only the shunt voltage or the bus voltage in order to further allow the monitoring function configuration to fit specific application requirements.

All current and power calculations are performed in the background and do not contribute to conversion time.

In triggered mode, writing any of the triggered convert modes into the Configuration register (that is, the MODE bits of the Configuration register are set to 001, 010, or 011) triggers a single-shot conversion. This action produces a single set of measurements. To trigger another single-shot conversion, the Configuration register must be written to again, even if the mode does not change.

In addition to the two operating modes (continuous and triggered), the INA231 also has a power-down mode that reduces the quiescent current and turns off current into the INA231 inputs, which reduces the impact of supply drain when the device is not being used. Full recovery from power-down mode requires 40 µs. The registers of the INA231 can be written to and read from while the device is in power-down mode. The device remains in power-down mode until one of the active modes settings are written into the Configuration register.

Although the INA231 can be read at any time, and the data from the last conversion remain available, the conversion ready flag bit (CVRF bit, Mask/Enable register) is provided to help coordinate single-shot or triggered conversions. The CVRF bit is set after all conversions, averaging, and multiplication operations are complete for a single cycle.

The CVRF bit clears under these conditions:

1. Writing to the Configuration register, except when configuring the MODE bits for power-down mode; or
2. Reading the Status register.

8.3.1.1 Power Calculation

The current and power are calculated after shunt voltage and bus voltage measurements, as shown in 図 8-2. The current is calculated after a shunt voltage measurement based on the value set in the Calibration register. If there is no value loaded into the Calibration register, the current value stored is zero. Power is calculated following the bus voltage measurement based on the previous current calculation and bus voltage measurement. If there is no value loaded in the Calibration register, the power value stored is also zero. These calculations are performed in the background and do not add to the overall conversion time. These current and power values are considered intermediate results (unless the averaging is set to 1) and are stored in an internal accumulation register, not the corresponding output registers. Following every measured sample, the newly-calculated values for current and power are appended to this accumulation register until all of the samples have been measured and averaged based on the number of averages set in the Configuration register.

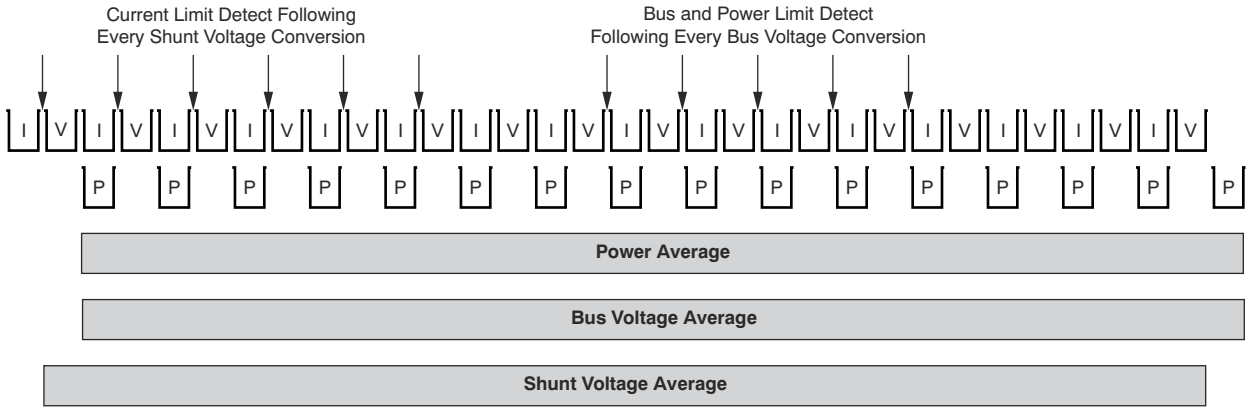

図 8-2. Power Calculation Scheme

In addition to the current and power accumulating after every sample, the shunt and bus voltage measurements are also collected. After all of the samples have been measured and the corresponding current and power calculations have been made, the accumulated average for each of these parameters is then loaded to the corresponding output registers where they can then be read.

8.3.1.2 ALERT Pin

The INA231 has a single Alert Limit register (07h) that allows the ALERT pin to be programmed to respond to a single user-defined event or to a conversion ready notification if desired. The Mask/Enable register allows for selection from one of the five available functions to monitor and set the conversion ready bit (CNVR, Mask/Enable register) to control the response of the ALERT pin. Based on the function being monitored, a value would then be entered into the Alert Limit register to set the corresponding threshold value that asserts the ALERT pin.

The ALERT pin allows for one of several available alert functions to be monitored to determine if a user-defined threshold has been exceeded. The five alert functions that can be monitored are:

- Shunt voltage overlimit (SOL)
- Shunt voltage underlimit (SUL)
- Bus voltage overlimit (BOL)
- Bus voltage underlimit (BUL)
- Power overlimit (POL)

The ALERT pin is an open-drain output. This pin is asserted when the alert function selected in the Mask/Enable register exceeds the value programmed into the Alert Limit register. Only one of these alert functions can be enabled and monitored at a time. If multiple alert functions are enabled, the selected function in the highest significant bit position takes priority and responds to the Alert Limit register value. For example, if the SOL and the SUL are both selected, the ALERT pin asserts when the Shunt Voltage Over Limit register exceeds the value in the Alert Limit register.

The conversion-ready state of the device can also be monitored at the ALERT pin to inform the user when the device has completed the previous conversion and is ready to begin a new conversion. The conversion ready flag (CVRF) bit can be monitored at the ALERT pin along with one of the alert functions. If an alert function and the CNVR bit are both enabled for monitoring at the ALERT pin, then after the ALERT pin is asserted, the CVRF bit (D3) and the AFF bit (D4) in the Mask/Enable register must be read following the alert to determine the source of the alert. If the conversion ready feature is not desired, and the CNVR bit is not set, the ALERT pin only responds to an exceeded alert limit based on the alert function enabled.

If the alert function is not used, the ALERT pin can be left floating without impacting the operation of the device.

Refer to 図 8-2 to see the relative timing of when the value in the Alert Limit register is compared to the corresponding converted value. For example, if the alert function that is enabled is Shunt Voltage Over Limit (SOL), following every shunt voltage conversion the value in the Alert Limit register is compared to the measured shunt voltage to determine if the measurements have exceeded the programmed limit. The AFF bit (D4, Mask/Enable register) asserts high any time the measured voltage exceeds the value programmed into the Alert Limit

Copyright © 2022 Texas Instruments Incorporated

register. In addition to the AFF bit being asserted, the ALERT pin is asserted based on the Alert Polarity bit (APOL, D1, Mask/Enable register). If the Alert Latch is enabled, the AFF bit and ALERT pin remain asserted until either the Configuration register is written to or the Mask/Enable register is read.

The bus voltage alert functions (BOL and BUL, Mask/Enable register) compare the measured bus voltage to the Alert Limit register following every bus voltage conversion and assert the AFF bit and ALERT pin if the limit threshold is exceeded.

The power overlimit alert function (POL, Mask/Enable register) is also compared to the calculated power value following every bus voltage measurement conversion and asserts the AFF bit and ALERT pin if the limit threshold is exceeded.

The alert function compares the programmed alert limit value to the result of each corresponding conversion. Therefore, an alert can be issued during a conversion cycle where the averaged value of the signal does not exceed the alert limit. Triggering an alert based on this intermediate conversion allows for out-of-range events to be detected faster than the averaged output data registers are updated. This fast detection can be used to create alert limits for quickly changing conditions through the use of the alert function, as well as to create limits to longer-duration conditions through software monitoring of the averaged output values.

Copyright © 2022 Texas Instruments Incorporated

8.4 Device Functional Modes

8.4.1 Averaging and Conversion Time Considerations

The INA231 has programmable conversion times for both the shunt voltage and bus voltage measurements. The conversion times for these measurements can be selected from as fast as 140 µs to as long as 8.244 ms. The conversion time settings, along with the programmable averaging mode, allow the INA231 to be configured to optimize the available timing requirements in a given application. For example, if a system requires that data be read every 5 ms, the INA231 can be configured with the conversion times set to 588 µs and the averaging mode set to 4. This configuration results in the data updating approximately every 4.7 ms. The INA231 can also be configured with a different conversion time setting for the shunt and bus voltage measurements. This type of approach is common in applications where the bus voltage tends to be relatively stable. This situation allows for the time spent measuring the bus voltage to be reduced relative to the shunt voltage measurement. The shunt voltage conversion time can be set to 4.156 ms with the bus voltage conversion time set to 588 µs, and the averaging mode set to 1. This configuration also results in data updating approximately every 4.7 ms.

There are trade-offs associated with the conversion time settings and the averaging mode used. The averaging feature can significantly improve the measurement accuracy by effectively filtering the signal. This approach allows the INA231 to reduce noise in the measurement that may be caused by noise coupling into the signal. A greater number of averages enables the INA231 to be more effective in reducing the noise component of the measurement.

The conversion times selected can also have an impact on the measurement accuracy; this effect can be seen in 図 8-3. Multiple conversion times are shown to illustrate the impact of noise on the measurement. In order to achieve the highest accuracy measurement possible, use a combination of the longest allowable conversion times and highest number of averages, based on the timing requirements of the system.

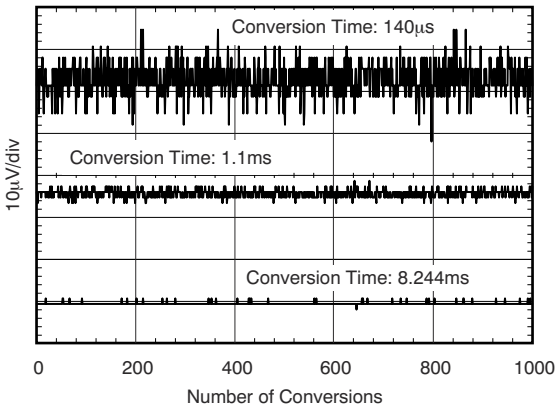

図 8-3. Noise vs Conversion Time

Copyright © 2022 Texas Instruments Incorporated

8.5 Programming

An important aspect of the INA231 is that it does not necessarily measure current or power. The INA231 measures both the differential voltage applied between the IN+ and IN– input pins and the voltage applied to the BUS pin. In order for the INA231 to report both current and power values, both the Current register resolution and the value of the shunt resistor present in the application that resulted in the differential voltage being developed must be programmed. The Power register is internally set to be 25 times the programmed least significant bit of the Current register (Current_LSB). Both the Current_LSB and shunt resistor value are used when calculating the Calibration register value. The INA231 uses this value to calculate the corresponding current and power values based on the measured shunt and bus voltages.

The Calibration register is calculated based on 式 1. This equation includes the term Current_LSB, the programmed value for the LSB for the Current register. This is the value used to convert the value in the Current register to the actual current in amps. The highest resolution for the Current register can be obtained by using the smallest allowable Current_LSB based on the maximum expected current, as shown in 式 2. While this value yields the highest resolution, it is common to select a value for the Current_LSB to the nearest round number above this value to simplify the conversion of the Current register and Power register to amps and watts, respectively. R_{SHUNT} is the value of the external shunt used to develop the differential voltage across the input pins. The 0.00512 value in 式 1 is an internal fixed value used to make sure that scaling is properly maintained.

$$CAL = \frac{0.00512}{Current_LSB \bullet R_{SHUNT}} \tag{1}$$

$$Current_LSB = \frac{Maximum\ Expected\ Current}{2^{15}} \tag{2}$$

After the Calibration register has been programmed, the Current register and Power register are updated accordingly based on the corresponding shunt voltage and bus voltage measurements. Until the Calibration register is programmed, the Current and Power registers remain at zero.

8.5.1 Configure, Measure, and Calculate Example

In this example, shown in 図 9-3, a nominal 10-A load creates a differential voltage of 20 mV across a 2-mΩ shunt resistor. The bus voltage for the INA231 is measured at the external BUS input pin; in this example, BUS is connected to the IN– pin to measure the voltage level delivered to the load. For this example, the BUS pin measures less than 12 V because the voltage at the IN– pin is 11.98 V as a result of the voltage drop across the shunt resistor.

For this example, assuming a maximum expected current of 15 A, the Current_LSB is calculated to be 457.7 µA/bit using 式 2. Using a value of 500 µA/bit or 1 mA/bit for the Current_LSB significantly simplifies the conversion from the Current register and Power register to amps and watts, respectively. For this example, a value of 1 mA/bit was chosen for the Current register LSB. Using this value for the Current_LSB trades a small amount of resolution for a simpler conversion process on the processor side. Using 式 1 in this example with a current LSB of 1 mA/bit and a shunt resistor of 2 mΩ results in a Calibration register value of 2560, or A00h.

The Current register (04h) is then calculated by multiplying the decimal value of the Shunt Voltage register contents by the decimal value of the Calibration register and then dividing by 2048, as shown in 式 3. For this example, the Shunt Voltage register value of 8000 is multiplied by the Calibration register value of 2560 and then divided by 2048 to yield a decimal value for the Current register of 10000, or 2710h. Multiplying this value by 1 mA/bit results in the original 10-A level stated in the example.

Copyright © 2022 Texas Instruments Incorporated

$$\text{Current} = \frac{\text{ShuntVoltage} \bullet \text{CalibrationRegister}}{2048} \tag{3}$$

The LSB for the Bus Voltage register (02h) is a fixed 1.25 mV/bit. This fixed value means that the 11.98 V present at the BUS pin results in a register value of 2570h, or a decimal equivalent of 9584. Note that the MSB of the Bus Voltage register is always zero because the BUS pin is only able to measure positive voltages.

The Power register (03h) is then calculated by multiplying the decimal value of the Current register, 10000, by the decimal value of the Bus Voltage register, 9584, and then dividing by 20,000, as defined in 式 4. For this example, the result for the Power register is 12B8h, or a decimal equivalent of 4792. Multiplying this result by the power LSB (25 times the [1×10^{-3} Current_LSB]) results in a power calculation of (4792 × 25 mW/bit), or 119.8 W. The Power register LSB has a fixed ratio to the Current register LSB of 25 W/bit to 1 A/bit. For this example, a programmed Current register LSB of 1 mA/bit results in a Power register LSB of 25 mW/bit. This ratio is internally programmed to make sure that the scaling of the power calculation is within an acceptable range. A manual calculation for the power being delivered to the load would use a bus voltage of 11.98 V ($12V_{CM}$ – 20 mV shunt drop) multiplied by the load current of 10 A to give a result of 119.8 W.

$$\text{Power} = \frac{\text{Current} \bullet \text{BusVoltage}}{20{,}000} \tag{4}$$

表 8-1 shows the steps for configuring, measuring, and calculating the values for current and power for this device.

表 8-1. Configure, Measure. and Calculate Example(1)

STEP #	REGISTER NAME	ADDRESS	CONTENTS	DEC	LSB	VALUE
Step 1	Configuration	00h	4127h	—	—	—
Step 2	Shunt	01h	1F40h	8000	2.5 µV	20m V
Step 3	Bus	02h	2570h	9584	1.25 mV	11.98 V
Step 4	Calibration	05h	A00h	2560	—	—
Step 5	Current	04h	2710h	10000	1 mA	10 A
Step 6	Power	03h	12B8h	4792	25 mW	119.8 W

(1) Conditions: Load = 10 A, V_{CM} = 12 V, R_{SHUNT} = 2 mΩ, and V_{BUS} =11.98 V.

Copyright © 2022 Texas Instruments Incorporated

8.5.2 Programming the Power Measurement Engine

8.5.2.1 Calibration Register and Scaling

The Calibration register makes it possible to set the scaling of the Current and Power registers to the values that are most useful for a given application. One strategy may be to set the Calibration register so that the largest possible number is generated in the Current register or Power register at the expected full-scale point. This approach yields the highest resolution based on the previously-calculated minimum Current_LSB in the equation for the Calibration register (式 1). The Calibration register can also be selected to provide values in the Current and Power registers that either provide direct decimal equivalents of the values being measured, or yield a round LSB value for each corresponding register. After these choices have been made, the Calibration register also offers possibilities for end-user, system-level calibration. By physically measuring the current with an external ammeter, the exact current is known. The value of the Calibration register can then be adjusted based on the measured current result of the INA231 to cancel the total system error, as shown in 式 5.

$$\text{Corrected_Full_Scale_Cal} = \text{trunc}\left(\frac{\text{Cal} \times \text{MeasShuntCurrent}}{\text{INA231_Current}}\right) \tag{5}$$

8.5.3 Simple Current Shunt Monitor Usage (No Programming Necessary)

The INA231 does not require programming to read a shunt voltage drop and the bus voltage when using the default power-on reset configuration and running continuous conversions of the shunt and bus voltage.

Without programming the INA231 Calibration register, the device is unable to provide either a valid current or power value because these outputs are both derived using the values loaded into the Calibration register.

8.5.4 Default INA231 Settings

The default power-up states of the registers are shown in the *Register Details* section of this data sheet. These registers are volatile, and if programmed to a value other than the default values shown in 表 8-3, they must be reprogrammed at every device power-up. Detailed information on programming the Calibration register is given in the *Configure/Measure/Calculate Example* section and calculated based on 式 1.

8.5.5 Writing to and Reading from the INA231

8.5.5.1 Bus Overview

The INA231 offers compatibility with both I^2C and SMBus interfaces. The I^2C and SMBus protocols are essentially compatible with one another.

The I^2C interface is used throughout this data sheet as the primary example, with SMBus protocol specified only when a difference between the two systems is discussed. Two bidirectional lines, SCL and SDA, connect the INA231 to the bus. Both SCL and SDA are open-drain connections.

The device that initiates a data transfer is called a *master*, and the devices controlled by the master are *slaves*. The bus must be controlled by a master device that generates the serial clock (SCL), controls the bus access, and generates start and stop conditions.

To address a specific device, the master initiates a start condition by pulling the data signal line (SDA) from a high to a low logic level while SCL is high. All slaves on the bus shift in the slave address byte on the rising edge of SCL, with the last bit indicating whether a read or write operation is intended. During the ninth clock pulse, the slave being addressed responds to the master by generating an *Acknowledge* bit (ACK) and pulling SDA low.

Data transfer is then initiated and eight bits of data are sent, followed by an ACK. During data transfer, SDA must remain stable while SCL is high. Any change in SDA while SCL is high is interpreted as a start or stop condition.

After all data have been transferred, the master generates a stop condition indicated by pulling SDA from low to high while SCL is high. The INA231 includes a 28-ms timeout on its interface to prevent locking up the bus.

Accessing a specific register on the INA231 is accomplished by writing the appropriate value to the register pointer. Refer to 表 8-3 for a complete list of registers and corresponding addresses. The value for the register pointer (shown in 図 8-7) is the first byte transferred after the slave address byte with the R/ $\overline{W}$ bit low. Every write operation to the INA231 requires a value for the register pointer.

Writing to a register begins with the first byte transmitted by the master. This byte is the slave address, with the R/ $\overline{W}$ bit low. The INA231 then acknowledges receipt of a valid address. The next byte transmitted by the master is the address of the register that data are written to. This register address value updates the register pointer to the desired register. The next two bytes are written to the register addressed by the register pointer. The INA231 acknowledges receipt of each data byte. The master may terminate data transfer by generating a start or stop condition.

When reading from the INA231, the last value stored in the register pointer by a write operation determines which register is read during a read operation. To change the register pointer for a read operation, a new value must be written to the register pointer. This write is accomplished by issuing a slave address byte with the R/ $\overline{W}$ bit low, followed by the register pointer byte. No additional data are required. The master then generates a start condition and sends the slave address byte with the R/ $\overline{W}$ bit high to initiate the read command. The next byte is transmitted by the slave and is the most significant byte of the register indicated by the register pointer. This byte is followed by an ACK from the master; then the slave transmits the least significant byte. The master acknowledges receipt of the data byte. The master may terminate data transfer by generating a *Not-Acknowledge* bit (No ACK) after receiving any data byte, or generating a start or stop condition. If repeated reads from the same register are desired, it is not necessary to continually send the register pointer bytes; the INA231 retains the register pointer value until it is changed by the next write operation.

図 8-4 and 図 8-5 show the write and read operation timing diagrams, respectively. Note that register bytes are sent most-significant byte first, followed by the least significant byte.

Copyright © 2022 Texas Instruments Incorporated

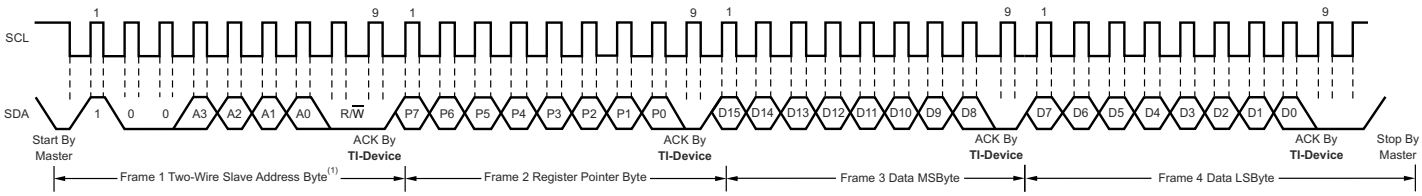

A. The value of the slave address byte is determined by the settings of the A0 and A1 pins. Refer to 表 8-2.

図 8-4. Timing Diagram for Write Word Format

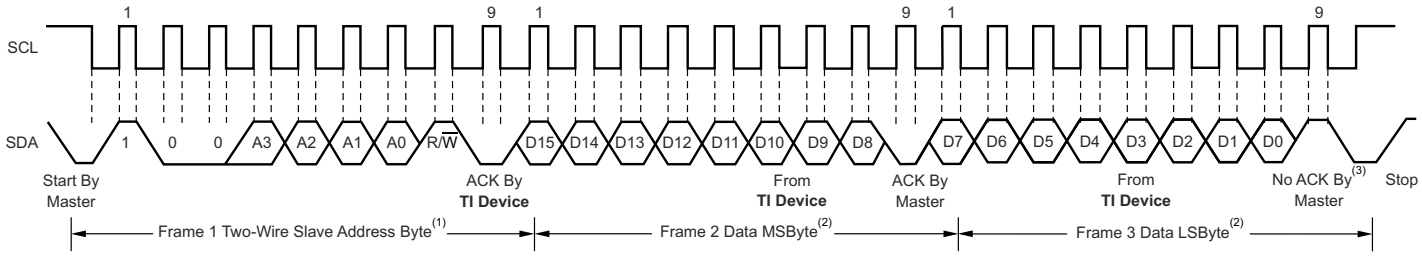

A. The value of the slave address byte is determined by the settings of the A0 and A1 pins. Refer to 表 8-2.

B. Read data are from the last register pointer location. If a new register is desired, the register pointer must be updated. See 図 8-7.

C. ACK by Master can also be sent.

図 8-5. Timing Diagram for Read Word Format

図 8-6 shows the timing diagram for the SMBus alert response operation. 図 8-7 illustrates a typical register pointer configuration.

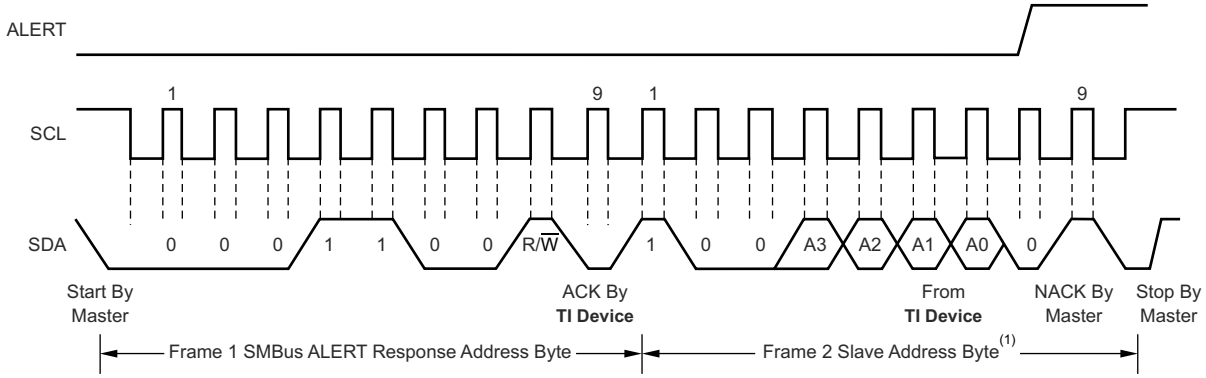

A. The slave address byte value is determined by the settings of the A0 and A1 pins. Refer to 表 8-2.

図 8-6. Timing Diagram for SMBus Alert

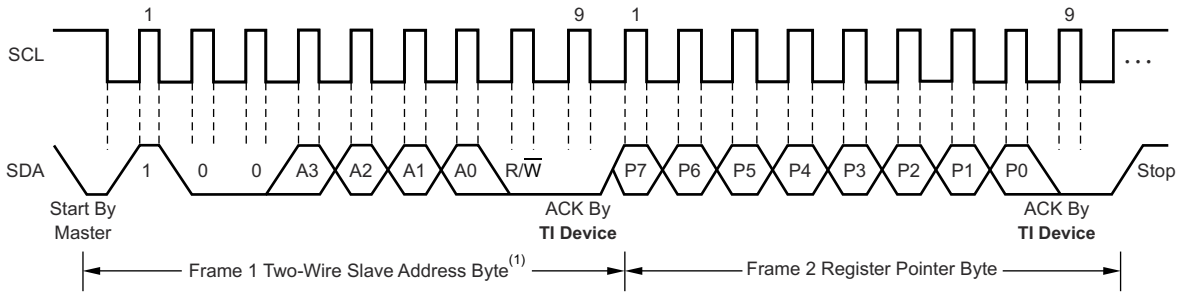

A. The slave address byte value is determined by the settings of the A0 and A1 pins. Refer to 表 8-2.

図 8-7. Typical Register Pointer Set

8.5.5.1.1 Serial Bus Address

In order to communicate with the INA231, the master must first address slave devices using a corresponding slave address byte. The slave address byte consists of seven address bits and a direction bit that indicates whether the action is to be a read or write operation.

The INA231 has two address pins: A0 and A1. 表 8-2 describes the pin logic levels for each of the 16 possible addresses. The state of pins A0 and A1 is sampled on every bus communication. Set these pins before any activity on the interface occurs.

表 8-2. Address Pins and Slave Addresses

A1	A0	SLAVE ADDRESS
GND	GND	1000000
GND	V_S	1000001
GND	SDA	1000010
GND	SCL	1000011
V_S	GND	1000100
V_S	V_S	1000101
V_S	SDA	1000110
V_S	SCL	1000111
SDA	GND	1001000
SDA	V_S	1001001
SDA	SDA	1001010
SDA	SCL	1001011
SCL	GND	1001100
SCL	V_S	1001101
SCL	SDA	1001110
SCL	SCL	1001111

Copyright © 2022 Texas Instruments Incorporated

8.5.5.1.2 Serial Interface

The INA231 operates only as a slave device on both the I^2C bus and the SMBus. Connections to the bus are made through the open-drain I/O lines, SDA and SCL. The SDA and SCL pins feature integrated spike-suppression filters and Schmitt triggers to minimize the effects of input spikes and bus noise. Although there is spike suppression integrated into the digital I/O lines, use proper layout to minimize the amount of coupling into the communication lines. This noise introduction could occur from capacitively coupling signal edges between the two communication lines themselves or from other switching noise sources present in the system. Routing traces in parallel with ground in between layers on a printed circuit board (PCB) typically reduces the effects of coupling between the communication lines. Shielding communication lines in general is recommended to reduce to possibility of unintended noise coupling into the digital I/O lines that could be incorrectly interpreted as start or stop commands.

The INA231 supports the transmission protocol for Fast (1 kHz to 400 kHz) and High-speed (1 kHz to 2.5 MHz) modes. All data bytes are transmitted most significant byte first.

8.5.5.2 High-Speed I^2C Mode

When the bus is idle, both the SDA and SCL lines are pulled high by the pull-up devices. The master generates a start condition followed by a valid serial byte containing High-Speed (HS) master code *00001XXX*. This transmission is made in fast (400 kHz) or standard (100 kHz) (F/S) mode at no more than 400 kHz. The INA231 does not acknowledge the HS master code, but does recognize it and switches its internal filters to support 2.5-MHz operation.

The master then generates a repeated start condition (a repeated start condition has the same timing as the start condition). After this repeated start condition, the protocol is the same as F/S mode except that transmission speeds up to 2.5 MHz are allowed. Instead of using a stop condition, use repeated start conditions to secure the bus in HS-mode. A stop condition ends the HS-mode and switches all the internal filters of the INA231 to support the F/S mode. A bus timing diagram is shown in 図 7-1.

8.5.6 SMBus Alert Response

The INA231 is designed to respond to the SMBus alert response address. The SMBus alert response provides a quick fault identification for simple slave devices. When an alert occurs, the master can broadcast the alert response slave address (0001 100) with the Read/Write bit set high. Following this alert response, any slave devices that generated an alert identify themselves by acknowledging the alert response and sending their respective address on the bus.

The alert response can activate several different slave devices simultaneously, similar to the I^2C general call. If more than one slave attempts to respond, bus arbitration rules apply. The losing device does not generate an acknowledge and continues to hold the ALERT line low until the interrupt is cleared.

8.6 Register Maps

The INA231 uses a bank of registers for holding configuration settings, measurement results, minimum/maximum limits, and status information. 表 8-3 summarizes the INA231 registers; refer to 図 8-1 for an illustration of the registers.

All 16-bit INA231 registers are two 8-bit bytes through the I^2C interface.

表 8-3. Summary of Register Set

POINTER ADDRESS			POWER-ON RESET		
HEX	REGISTER NAME	FUNCTION	BINARY	HEX	TYPE[(1)]
00	Configuration	This register resets all registers and controls shunt voltage and bus voltage, ADC conversion times and averaging, as well as the device operating mode.	01000001 00100111	4127	R/ $\overline{W}$
01	Shunt Voltage	Shunt voltage measurement data	00000000 00000000	0000	R
02	Bus Voltage	Bus voltage measurement data	00000000 00000000	0000	R
03	Power[(2)]	This register contains the value of the calculated power being delivered to the load.	00000000 00000000	0000	R
04	Current[(2)]	This register contains the value of the calculated current flowing through the shunt resistor.	00000000 00000000	0000	R
05	Calibration	This register sets the full-scale range and LSB of the current and power measurements. This register sets the overall system calibration.	00000000 00000000	0000	R/ $\overline{W}$
06	Mask/Enable	This register sets the alert configuration and conversion ready flag.	00000000 00000000	0000	R/ $\overline{W}$
07	Alert Limit	This register contains the limit value to compare to the selected alert function.	00000000 00000000	0000	R/ $\overline{W}$

(1) Type: R = read-only, R/ $\overline{W}$ = read/write.
(2) The Current register defaults to '0' because the Calibration register defaults to '0', yielding a zero current and power value until the Calibration register is programmed.

Copyright © 2022 Texas Instruments Incorporated

8.6.1 Configuration Register (00h, Read/Write)

表 8-4. Configuration Register (00h, Read/Write) Descriptions

BIT #	D15	D14	D13	D12	D11	D10	D9	D8	D7	D6	D5	D4	D3	D2	D1	D0
BIT NAME	RST	—	—	—	AVG2	AVG1	AVG0	V_{BUS}CT2	V_{BUS}CT1	V_{BUS}CT0	V_{SH}CT2	V_{SH}CT1	V_{SH}CT0	MODE3	MODE2	MODE1
POR VALUE	0	1	0	0	0	0	0	1	0	0	1	0	0	1	1	1

The Configuration register settings control the operating modes for the INA231. This register controls the conversion time settings for both the shunt and bus voltage measurements, as well as the averaging mode used. The operating mode that controls which signals are selected to be measured is also programmed in the Configuration register.

The Configuration register can be read from at any time without impacting or affecting the device settings or a conversion in progress. Writing to the Configuration register halts any conversion in progress until the write sequence is complete, resulting in the start of a new conversion based on the new contents of the Configuration register. This feature prevents any uncertainty in the conditions used for the next completed conversion.

RST: **Reset Bit**

Bit 15 — Setting this bit to 1 generates a system reset that is the same as a power-on reset; all registers are reset to default values. This bit self-clears.

AVG: **Averaging Mode**

Bits 9–11 — These bits set the number of samples that are collected and averaged together. 表 8-5 summarizes the AVG bit settings and related number of averages for each bit.

8.6.1.1 AVG Bit Settings [11:9]

表 8-5. AVG Bit Settings [11:9][(1)] Description

AVG2 (D11)	AVG1 (D10)	AVG0 (D9)	NUMBER OF AVERAGES
0	0	0	1
0	0	1	4
0	1	0	16
0	1	1	64
1	0	0	128
1	0	1	256
1	1	0	512
1	1	1	1024

(1) Shaded values are default.

V_{BUS} CT: **Bus Voltage Conversion Time**

Bits 6–8 — These bits set the conversion time for the bus voltage measurement. 表 8-6 shows the V_{BUS} CT bit options and related conversion times for each bit.

8.6.1.2 V_{BUS} CT Bit Settings [8:6]

表 8-6. V_{BUS} CT Bit Settings [8:6][(1)] Description

V_{BUS} CT2 (D8)	V_{BUS} CT1 (D7)	V_{BUS} CT0 (D6)	CONVERSION TIME
0	0	0	140 µs
0	0	1	204 µs
0	1	0	332 µs
0	1	1	588 µs
1	0	0	1.1 ms
1	0	1	2.116 ms
1	1	0	4.156 ms
1	1	1	8.244 ms

(1) Shaded values are default.

V_{SH} CT: **Shunt Voltage Conversion Time**

Bits 3–5 These bits set the conversion time for the shunt voltage measurement. 表 8-7 shows the V_{SH} CT bit options and related conversion times for each bit.

8.6.1.3 V_{SH} CT Bit Settings [5:3]

表 8-7. Register Description V_{SH} CT Bit Settings [5:3][(1)]

V_{SH} CT2 (D5)	V_{SH} CT1 (D4)	V_{SH} CT0 (D3)	CONVERSION TIME
0	0	0	140 µs
0	0	1	204 µs
0	1	0	332 µs
0	1	1	588 µs
1	0	0	1.1 ms
1	0	1	2.116 ms
1	1	0	4.156 ms
1	1	1	8.244 ms

(1) Shaded values are default.

MODE: **Operating Mode**

Bits 0–2 These bits select continuous, triggered, or power-down mode of operation. These bits default to continuous shunt and bus measurement mode. The mode settings are shown in 表 8-8.

8.6.1.4 Mode Settings [2:0]

表 8-8. Mode Settings [2:0][(1)]

MODE3 (D2)	MODE2 (D1)	MODE1 (D0)	MODE
0	0	0	Power-down (INA231B default)
0	0	1	Shunt voltage, triggered
0	1	0	Bus voltage, triggered
0	1	1	Shunt and bus, triggered
1	0	0	Power-down
1	0	1	Shunt voltage, continuous
1	1	0	Bus voltage, continuous
1	1	1	Shunt and bus, continuous (INA231A default)

(1) Shaded values are default.

Copyright © 2022 Texas Instruments Incorporated

8.6.2 Shunt Voltage Register (01h, Read-Only)

The Shunt Voltage register stores the current shunt voltage reading, V_{SHUNT}. Negative numbers are represented in twos complement format. Generate the two's complement of a negative number by complementing the absolute value binary number and adding 1. Extend the sign, denoting a negative number by setting the MSB = 1.

Example: For a value of V_{SHUNT} = –80 mV:

1. Take the absolute value: 80mV
2. Translate this number to a whole decimal number (80 mV ÷ 2.5 µV) = 32000
3. Convert this number to binary = 111 1101 0000 0000
4. Complement the binary result = 000 0010 1111 1111
5. Add '1' to the complement to create the two's complement result = 000 0011 0000 0000
6. Extend the sign and create the 16-bit word: 1000 0011 0000 0000 = 8300h

This register displays the averaged value if averaging is enabled. Full-scale range = 81.9175 mV (decimal = 7FFF); LSB: 2.5 µV.

表 8-9. Shunt Voltage Register (01h, Read-Only) Description

BIT #	D15	D14	D13	D12	D11	D10	D9	D8	D7	D6	D5	D4	D3	D2	D1	D0
BIT NAME	SIGN	SD14	SD13	SD12	SD11	SD10	SD9	SD8	SD7	SD6	SD5	SD4	SD3	SD2	SD1	SD0
POR VALUE	0	0	0	0	0	0	0	0	0	0	0	0	0	0	0	0

8.6.3 Bus Voltage Register (02h, Read-Only)

The Bus Voltage register stores the most recent bus voltage reading, V_{BUS}.

This register displays the averaged value if averaging is enabled. Full-scale range = 40.95875 V (decimal = 7FFF); LSB = 1.25 mV. Do not apply more than 28 V on the BUS pin.

表 8-10. Bus Voltage Register (02h, Read-Only)(1) Description

BIT #	D15	D14	D13	D12	D11	D10	D9	D8	D7	D6	D5	D4	D3	D2	D1	D0
BIT NAME	—	BD14	BD13	BD12	BD11	BD10	BD9	BD8	BD7	BD6	BD5	BD4	BD3	BD2	BD1	BD0
POR VALUE	0	0	0	0	0	0	0	0	0	0	0	0	0	0	0	0

(1) D15 is always zero because bus voltage can only be positive.

8.6.4 Power Register (03h, Read-Only)

This register displays the averaged value if averaging is enabled.

表 8-11. Power Register (03h, Read-Only) Description

BIT #	D15	D14	D13	D12	D11	D10	D9	D8	D7	D6	D5	D4	D3	D2	D1	D0
BIT NAME	PD15	PD14	PD13	PD12	PD11	PD10	PD9	PD8	PD7	PD6	PD5	PD4	PD3	PD2	PD1	PD0
POR VALUE	0	0	0	0	0	0	0	0	0	0	0	0	0	0	0	0

The Power register LSB is internally programmed to equal 25 times the programmed value of the Current_LSB.

The Power register records power in watts by multiplying the decimal values of the current register with the decimal value of the bus voltage register according to 式 4.

8.6.5 Current Register (04h, Read-Only)

If averaging is enabled, this register displays the averaged value.

表 8-12. Current Register (04h, Read-Only) Description

BIT #	D15	D14	D13	D12	D11	D10	D9	D8	D7	D6	D5	D4	D3	D2	D1	D0
BIT NAME	CSIGN	CD14	CD13	CD12	CD11	CD10	CD9	CD8	CD7	CD6	CD5	CD4	CD3	CD2	CD1	CD0
POR VALUE	0	0	0	0	0	0	0	0	0	0	0	0	0	0	0	0

The value of the Current register is calculated by multiplying the decimal value in the Shunt Voltage register with the decimal value of the Calibration register, according to 式 3.

8.6.6 Calibration Register (05h, Read/Write)

This register provides the INA231 with the shunt resistor value that was present to create the measured differential voltage. This register also sets the resolution of the Current register. The Current register LSB and Power register LSB are set through the programming of this register. This register is also used for overall system calibration. See the *Configure, Measure, and Calculate Example* for more information on programming this register.

表 8-13. Calibration Register (05h, Read/Write) Description

BIT #	D15	D14	D13	D12	D11	D10	D9	D8	D7	D6	D5	D4	D3	D2	D1	D0
BIT NAME	—	FS14	FS13	FS12	FS11	FS10	FS9	FS8	FS7	FS6	FS5	FS4	FS3	FS2	FS1	FS0
POR VALUE	0	0	0	0	0	0	0	0	0	0	0	0	0	0	0	0

8.6.7 Mask/Enable Register (06h, Read/Write)

The Mask/Enable register selects the function that controls the ALERT pin, as well as how that pin functions. If multiple functions are enabled, the highest significant bit position alert function (D15:D11) takes priority and responds to the Alert Limit register.

表 8-14. Mask/Enable Register (06h, Read/Write) Description

BIT #	D15	D14	D13	D12	D11	D10	D9	D8	D7	D6	D5	D4	D3	D2	D1	D0
BIT NAME	SOL	SUL	BOL	BUL	POL	CNVR	—	—	—	—	—	AFF	CVRF	OVF	APOL	LEN
POR VALUE	0	0	0	0	0	0	0	0	0	0	0	0	0	0	0	0

SOL: **Shunt Voltage Overvoltage1**

Bit 15 Setting this bit high configures the ALERT pin to be asserted when the shunt voltage conversion exceeds the value in the Alert Limit register.

SUL: **Shunt Voltage Undervoltage**

Bit 14 Setting this bit high configures the ALERT pin to be asserted when the shunt voltage conversion drops below the value in the Alert Limit register.

BOL: **Bus Voltage Overvoltage**

Bit 13 Setting this bit high configures the ALERT pin to be asserted when the bus voltage conversion exceeds the value in the Alert Limit register.

BUL: **Bus Voltage Undervoltage**

Bit 12 Setting this bit high configures the ALERT pin to be asserted when the bus voltage conversion drops below the value in the Alert Limit register.

POL: **Power Overlimit**

Copyright © 2022 Texas Instruments Incorporated

Bit 11 — Setting this bit high configures the ALERT pin to be asserted when the power calculation exceeds the value in the Alert Limit register.

CNVR: Conversion Ready

Bit 10 — Setting this bit high configures the ALERT pin to be asserted when the Conversion Ready Flag bit (CVRF, bit 3) is asserted, indicating that the device is ready for the next conversion.

AFF: Alert Function Flag

Bit 4 — Although only one alert function at a time can be monitored at the ALERT pin, the Conversion Ready bit (CNVR, bit 10) can also be enabled to assert the ALERT pin. Reading the Alert Function Flag bit after an alert can help determine if the alert function was the source of the alert.

When the Alert Latch Enable bit is set to Latch mode, the Alert Function Flag bit clears only when the Mask/Enable register is read. When the Alert Latch Enable bit is set to Transparent mode, the Alert Function Flag bit is cleared after the next conversion that does not result in an alert condition.

CVRF: Conversion Ready Flag

Bit 3 — Although the INA231 can be read at any time, and the data from the last conversion are available, this bit is provided to help coordinate single-shot or triggered conversions. This bit is set after all conversions, averaging, and multiplications are complete. This bit clears under the following conditions in single-shot mode:

1) Writing to the Configuration register (except for power-down or disable selections)

2) Reading the Mask/Enable register

OVF: Math Overflow Flag

Bit 2 — This bit is set to 1 if an arithmetic operation results in an overflow error; it indicates that current and power data may be invalid.

APOL: Alert Polarity

Bit 1 — Configures the latching feature of the ALERT pin and the flag bits.

1 = Inverted (active-high open collector)
0 = Normal (active-low open collector) (default)

LEN: Alert Latch Enable

Bit 0 — Configures the latching feature of the ALERT pin and flag bits.

1 = Latch enabled
0 = Transparent (default)

When the Alert Latch Enable bit is set to Transparent mode, the ALERT pin and flag bits reset to their idle states when the fault has been cleared. When the Alert Latch Enable bit is set to Latch mode, the ALERT pin and flag bits remain active following a fault until the Mask/Enable register has been read.

8.6.8 Alert Limit Register (07h, Read/Write)

The Alert Limit register contains the value used to compare to the register selected in the Mask/Enable register to determine if a limit has been exceeded.

表 8-15. Alert Limit Register (07h, Read/Write) Description

BIT #	D15	D14	D13	D12	D11	D10	D9	D8	D7	D6	D5	D4	D3	D2	D1	D0
BIT NAME	AUL15	AUL14	AUL13	AUL12	AUL11	AUL10	AUL9	AUL8	AUL7	AUL6	AUL5	AUL4	AUL3	AUL2	AUL1	AUL0
POR VALUE	0	0	0	0	0	0	0	0	0	0	0	0	0	0	0	0

Copyright © 2022 Texas Instruments Incorporated

9 Application and Implementation

注

以下のアプリケーション情報は、TI の製品仕様に含まれるものではなく、TI ではその正確性または完全性を保証いたしません。個々の目的に対する製品の適合性については、お客様の責任で判断していただくことになります。お客様は自身の設計実装を検証しテストすることで、システムの機能を確認する必要があります。

9.1 Application Information

The INA231 is a digital current shunt monitor with an I²C- and SMBus-compatible interface. This device provides digital current, voltage, and power readings necessary for accurate decision-making in precisely-controlled systems. Programmable registers allow flexible configuration for measurement resolution, as well as continuous-versus-triggered operation. Detailed register information appears towards the end of this data sheet, beginning with 表 8-3. See 図 8-1 for a block diagram of the INA231.

図 9-1 shows a typical application circuit for the INA231. For power-supply bypassing, place a 0.1-µF ceramic capacitor as close as possible to the supply and ground pins.

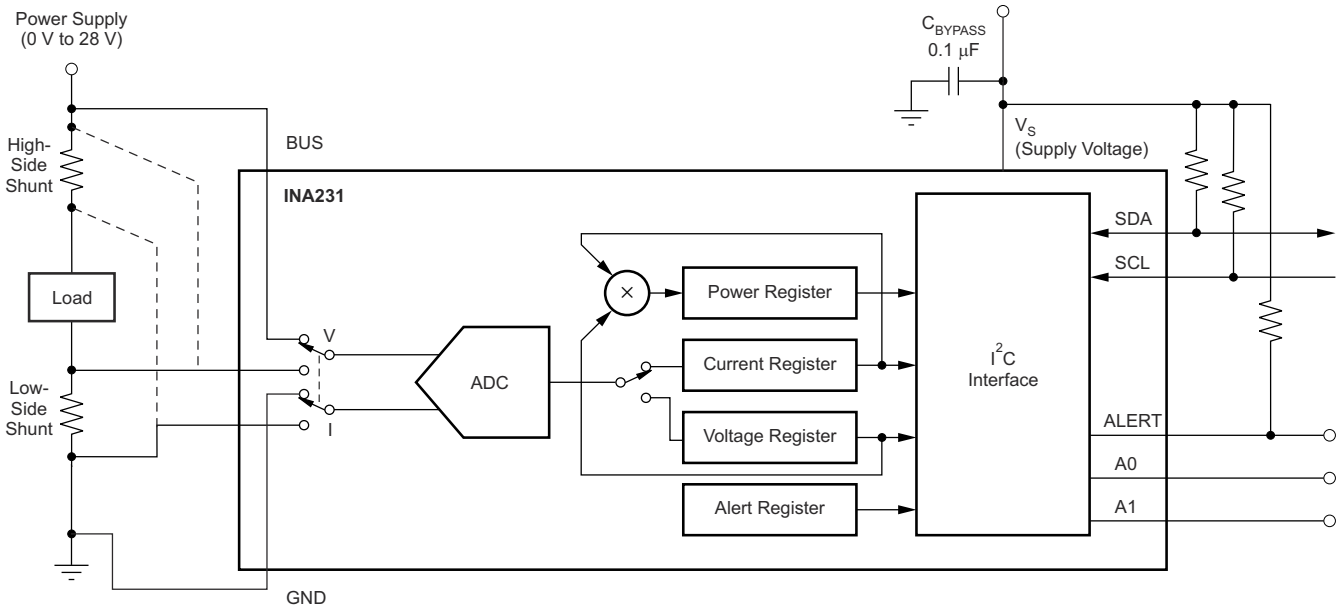

図 9-1. High- or Low-Side Sensing

9.1.1 Filtering and Input Considerations

Measuring current is often a noisy task, and such noise can be difficult to define. The INA231 offers several options for filtering by allowing the conversion times and number of averages to be independently selected in the Configuration register. The conversion times can be independently set for the shunt voltage and bus voltage measurements to allow added flexibility in configuring the monitoring of the power-supply bus.

The internal ADC is based on a delta-sigma (ΔΣ) front-end with a 500-kHz (±30%) typical sampling rate. This architecture has good inherent noise rejection; however, transients that occur at or very close to the sampling rate harmonics can cause problems. These signals are at 1 MHz and higher; therefore, manage them by incorporating filtering at the input of the INA231. The high frequency enables the use of low-value series resistors on the filter with negligible effects on measurement accuracy. In general, filtering the INA231 input is only necessary if there are transients at exact harmonics of the 500-kHz (±30%) sampling rate (greater than 1 MHz). Filter using the lowest possible series resistance (typically 10 Ω or less) and a ceramic capacitor. Recommended values for this capacitor are 0.1 µF to 1.0 µF. 図 9-2 shows the INA231 with an additional filter added at the input.

Copyright © 2022 Texas Instruments Incorporated

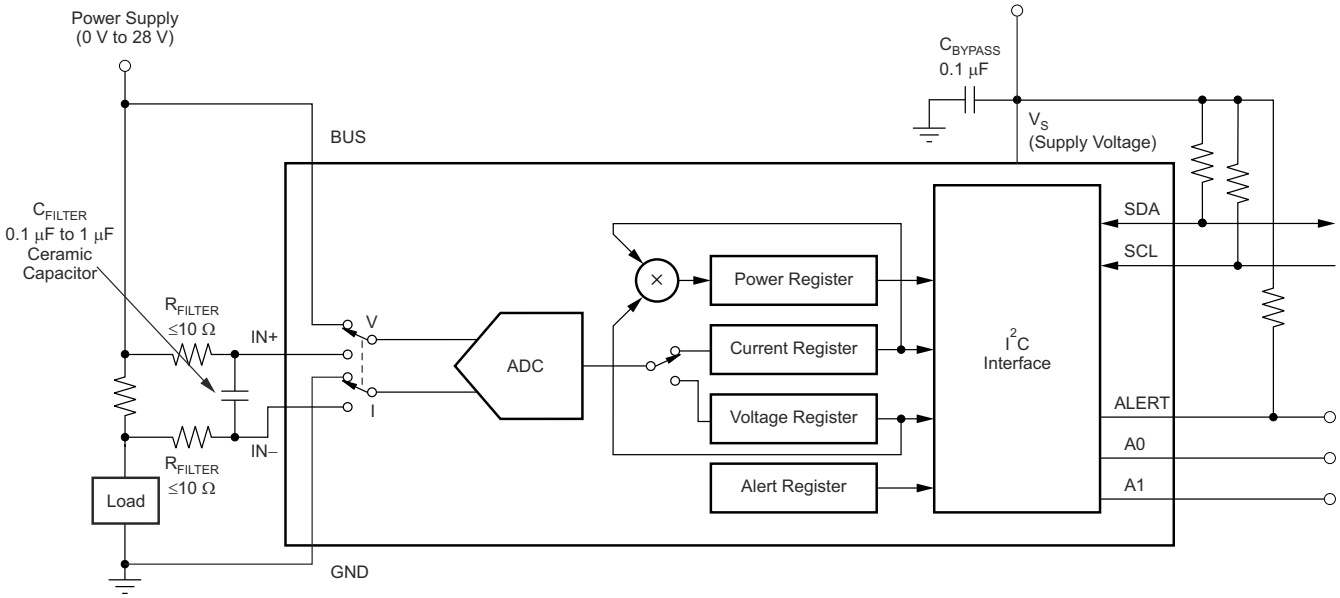

図 9-2. INA231 With Input Filtering

Overload conditions are another consideration for the INA231 inputs. The INA231 inputs are specified to tolerate 30 V across the inputs. A large differential scenario might be a short to ground on the load side of the shunt. This type of event can result in full power-supply voltage across the shunt (as long as the power supply or energy storage capacitors support it). Keep in mind that removing a short to ground can result in inductive kickbacks that could exceed the 30-V differential and common-mode rating of the INA231. Inductive kickback voltages are best controlled by zener-type transient-absorbing devices (commonly called *transzorbs*) combined with sufficient energy storage capacitance.

In applications that do not have large energy-storage electrolytics on one or both sides of the shunt, an input overstress condition may result from an excessive dV/dt of the voltage applied to the input. A hard physical short is the most likely cause of this event, particularly in applications with no large electrolytics present. This problem occurs because an excessive dV/dt can activate the ESD protection in the INA231 in systems where large currents are available. Testing has demonstrated that the addition of 10-Ω resistors in series with each input of the INA231 sufficiently protect the inputs against this dV/dt failure up to the 30-V rating of the INA231. Selecting these resistors in the range noted has minimal effect on accuracy.

9.2 Typical Applications

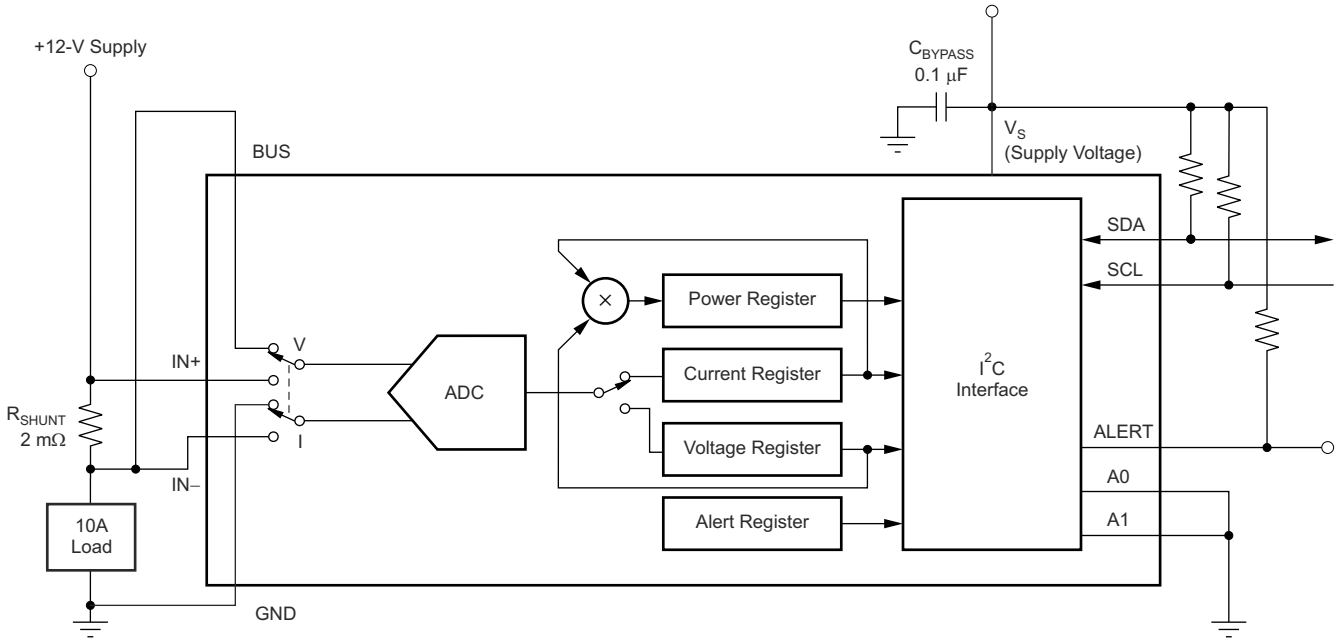

図 9-3. Monitoring a 10-A Load

9.2.1 Design Requirements

The INA231 measures the voltage developed across a current-sensing resistor (R_{SHUNT}) when current passes through the resistor. The device also measures the bus supply voltage, and calculates power when calibrated. The INA231 comes with alert capability, where the alert pin can be programmed to respond to a user-defined event, or to a conversion-ready notification. This design illustrates the ability of the alert pin to respond to a set threshold. In this case, a 10 A are pulled through a 2-mΩ shunt resistor, generating a 20-mV shunt voltage drop that is measured by the INA231. The bus supply is 12 V, and the BUS pin is tied to the IN– pin, so that the power loss through the shunt resistor, however small, is not added to the power calculation performed by the INA231. This configuration provides an accurate measurement the power dissipated by the load.

9.2.2 Detailed Design Procedure

The ALERT pin can be configured to respond to one of the five alert functions described in the *ALERT Pin* section. The ALERT pin must to be pulled up to the vs pin voltage using a pull-up resistor. The Configuration register is set based on the required conversion time and averaging. The Mask/Enable register is set to identify the required alert function and the Alert Limit register is set to the limit value used for comparison.

Copyright © 2022 Texas Instruments Incorporated

9.2.3 Application Curves

図 9-4 shows the ALERT pin response to a shunt overvoltage of 50 mV for a conversion time (t_{CT}) of 140 µs. and averaging set to 1. 図 9-5 shows the response for the same limit, but with the conversion time reduced to 1.1 ms.

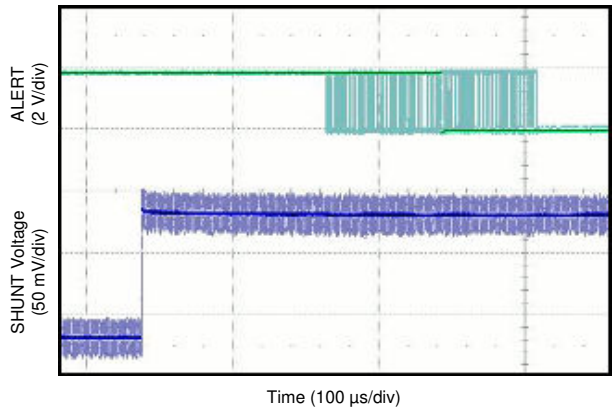

Configuration register = 4005h
Mask/Enable register = 8008h
Alert Limit register = 4E20h,
t_{CT} = 140 µs

図 9-4. Alert Response

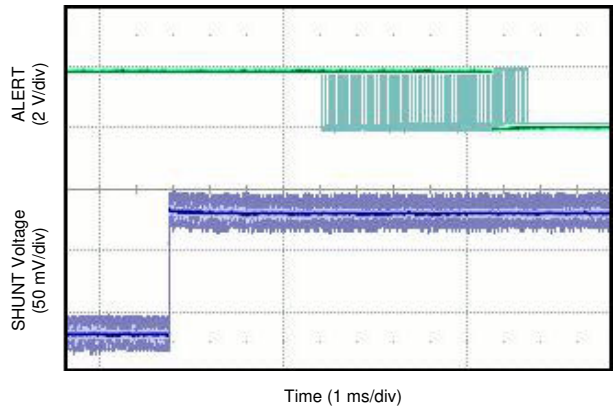

Configuration register = 4125h
Mask/Enable register = 8008h
Alert Limit register = 4E20h,
t_{CT} = 1.1 ms

図 9-5. Alert Response

9.3 Power Supply Recommendations

The INA231 input circuitry accurately measures signals on common-mode voltages beyond the device power-supply voltage, V_S. For example, the voltage applied to the power-supply pin (VS) can be 5 V; however, the load power-supply voltage being monitored (the common-mode voltage) can be as high as 28 V. The device can also withstand the full 0-V to 28-V range at the input terminals, regardless of whether the device has power applied or not.

Place the required power-supply bypass capacitors as close as possible to the supply and ground pins of the device. A typical value for this supply bypass capacitor is 0.1 µF. For more accurate results for applications with noisy or high-impedance power supplies, use additional decoupling capacitors to reject power-supply noise.

9.4 Layout

9.4.1 Layout Guidelines

Connect the input pins (IN+ and IN−) to the sensing resistor using a Kelvin or 4-wire connection. These connection techniques make sure that only the current-sensing resistor impedance is detected between the input pins. Poor routing of the current-sensing resistor commonly results in additional resistance present between the input pins. Given the very low ohmic value of the current-sensing resistor, any additional high-current-carrying impedance causes significant measurement errors. Place the power-supply bypass capacitor as close as possible to the supply and ground pins. Make sure the NC pins (B2 and C2) are not connected to anything.

Copyright © 2022 Texas Instruments Incorporated

9.4.2 Layout Example

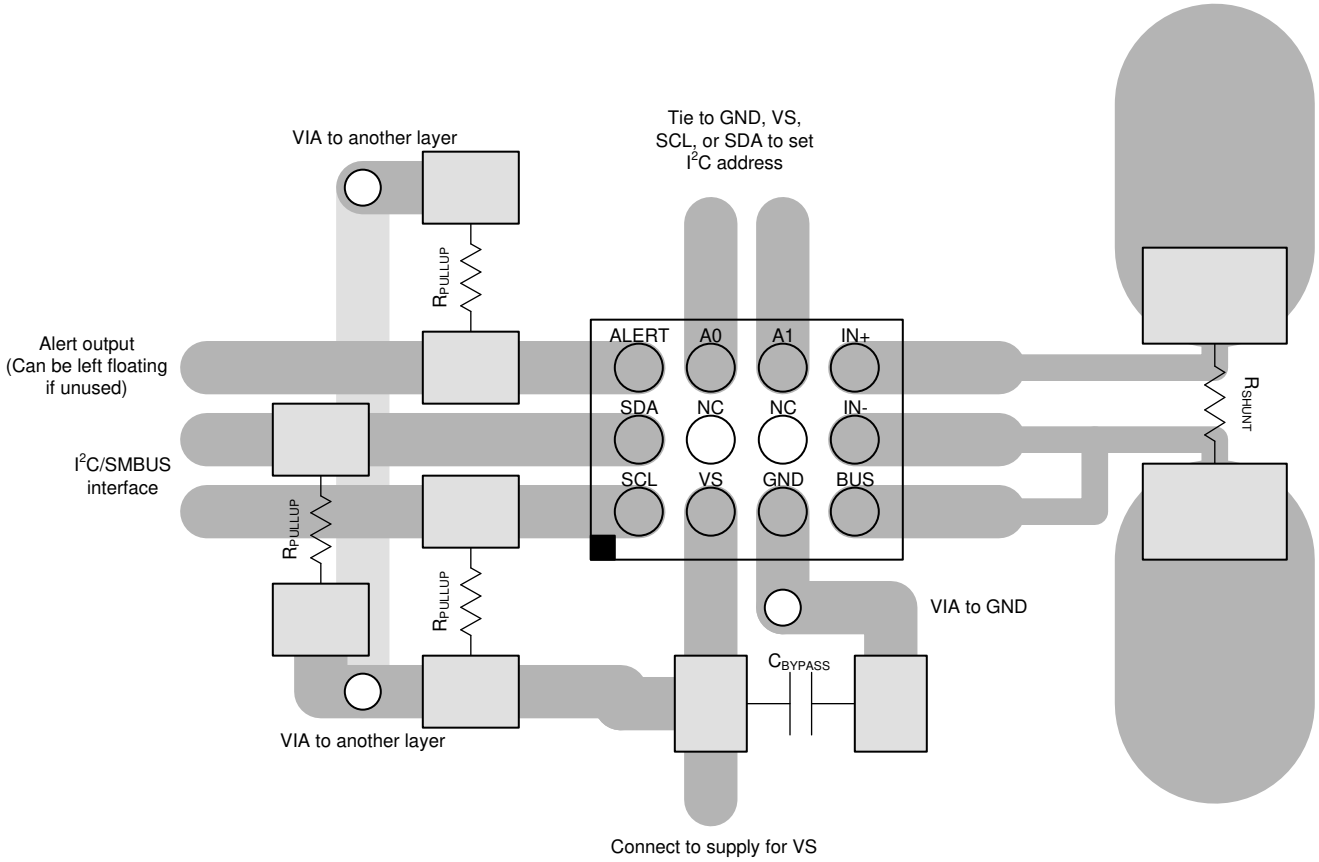

図 9-6. Layout Example

Copyright © 2022 Texas Instruments Incorporated

10 Device and Documentation Support

10.1 Documentation Support

10.1.1 Related Documentation

For related documentation see the following:

INA231EVM Evaluation Board and Software Tutorial

10.2 Receiving Notification of Documentation Updates

To receive notification of documentation updates, navigate to the device product folder on ti.com. Click on *Subscribe to updates* to register and receive a weekly digest of any product information that has changed. For change details, review the revision history included in any revised document.

10.3 サポート・リソース

TI E2E™ サポート・フォーラムは、エンジニアが検証済みの回答と設計に関するヒントをエキスパートから迅速かつ直接得ることができる場所です。既存の回答を検索したり、独自の質問をしたりすることで、設計で必要な支援を迅速に得ることができます。

リンクされているコンテンツは、該当する貢献者により、現状のまま提供されるものです。これらは TI の仕様を構成するものではなく、必ずしも TI の見解を反映したものではありません。TI の使用条件を参照してください。

10.4 Trademarks

TI E2E™ is a trademark of Texas Instruments.
すべての商標は、それぞれの所有者に帰属します。

10.5 Electrostatic Discharge Caution

This integrated circuit can be damaged by ESD. Texas Instruments recommends that all integrated circuits be handled with appropriate precautions. Failure to observe proper handling and installation procedures can cause damage.

ESD damage can range from subtle performance degradation to complete device failure. Precision integrated circuits may be more susceptible to damage because very small parametric changes could cause the device not to meet its published specifications.

10.6 Glossary

TI Glossary	This glossary lists and explains terms, acronyms, and definitions.

11 Mechanical, Packaging, and Orderable Information

The following pages include mechanical, packaging, and orderable information. This information is the most current data available for the designated devices. This data is subject to change without notice and revision of this document. For browser-based versions of this data sheet, refer to the left-hand navigation.

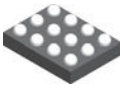

PACKAGE OUTLINE

YFD0012

DSBGA - 0.4 mm max height

DIE SIZE BALL GRID ARRAY

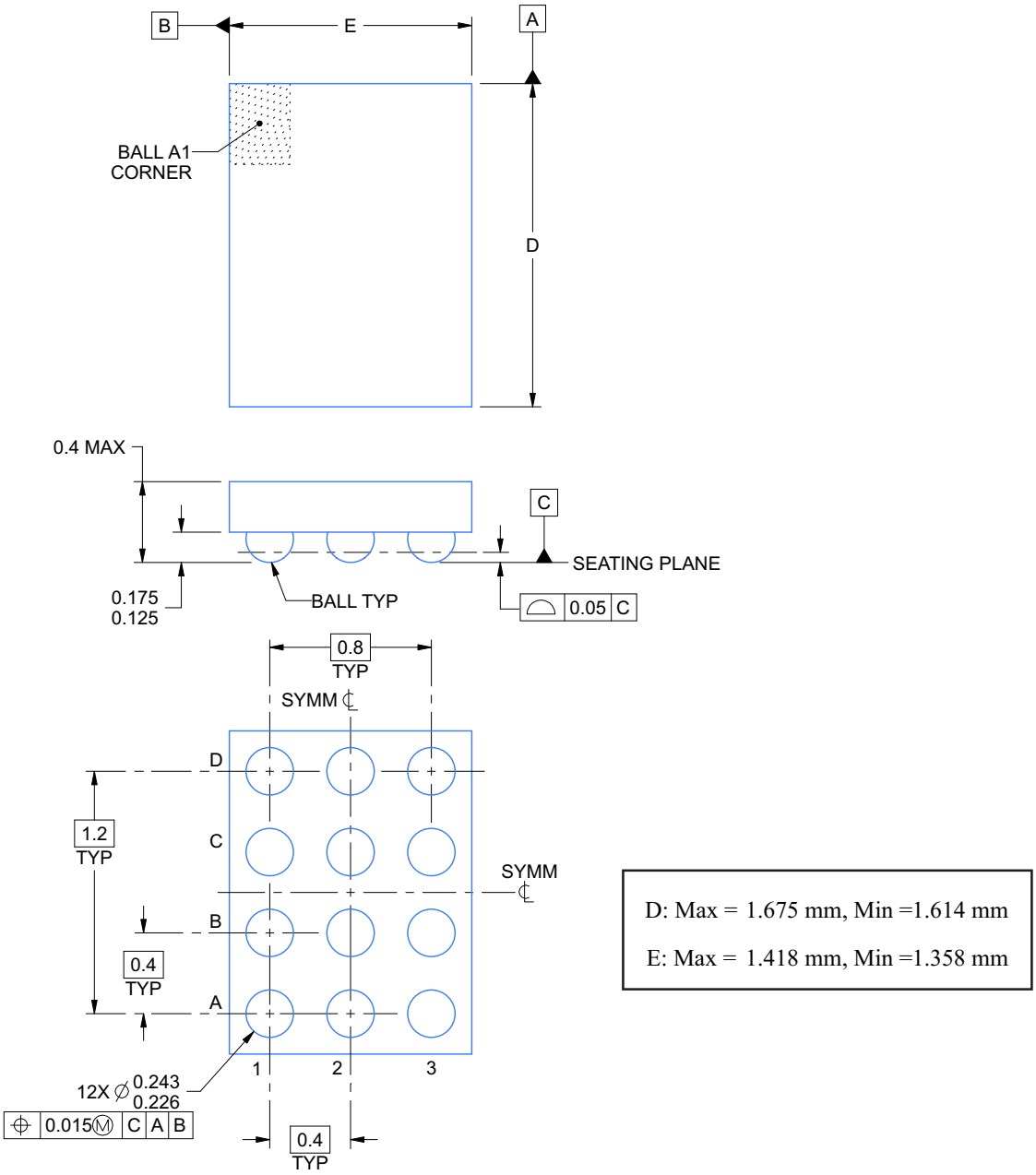

NOTES:

1. All linear dimensions are in millimeters. Any dimensions in parenthesis are for reference only. Dimensioning and tolerancing per ASME Y14.5M.
2. This drawing is subject to change without notice.

Copyright © 2022 Texas Instruments Incorporated

EXAMPLE BOARD LAYOUT

YFD0012

DSBGA - 0.4 mm max height

DIE SIZE BALL GRID ARRAY

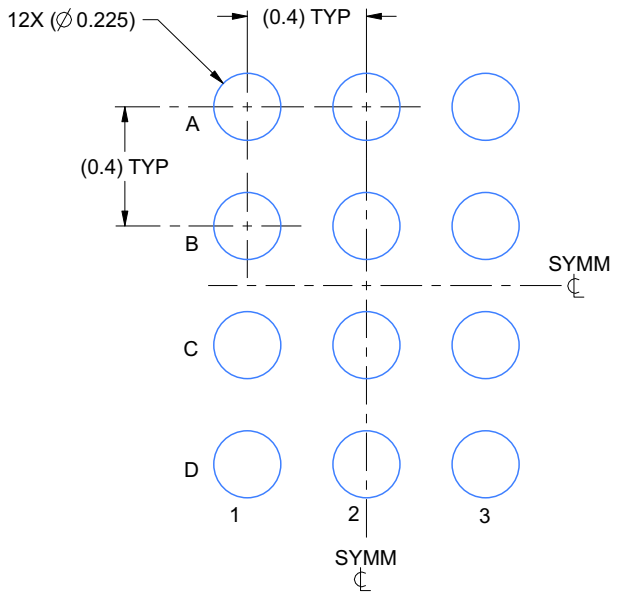

LAND PATTERN EXAMPLE
SCALE:40X

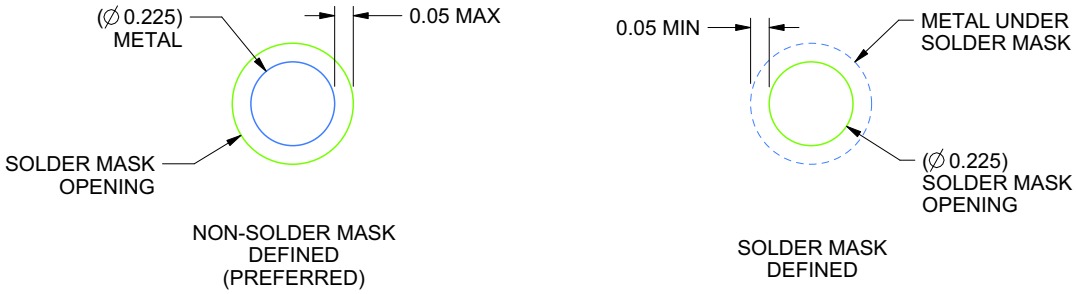

SOLDER MASK DETAILS
NOT TO SCALE

4223364/A 10/2016

NOTES: (continued)

3. Final dimensions may vary due to manufacturing tolerance considerations and also routing constraints.
   Refer to Texas Instruments Literature No. SNVA009 (www.ti.com/lit/snva009).

EXAMPLE STENCIL DESIGN

YFD0012

DSBGA - 0.4 mm max height

DIE SIZE BALL GRID ARRAY

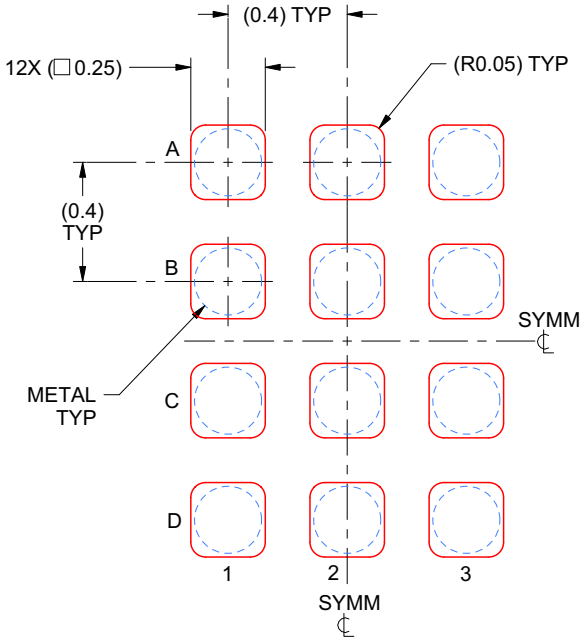

SOLDER PASTE EXAMPLE
BASED ON 0.1 mm THICK STENCIL
SCALE:40X

4223364/A 10/2016

NOTES: (continued)

4. Laser cutting apertures with trapezoidal walls and rounded corners may offer better paste release.

Copyright © 2022 Texas Instruments Incorporated

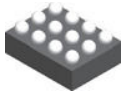

PACKAGE OUTLINE

YFF0012

DSBGA - 0.625 mm max height

DIE SIZE BALL GRID ARRAY

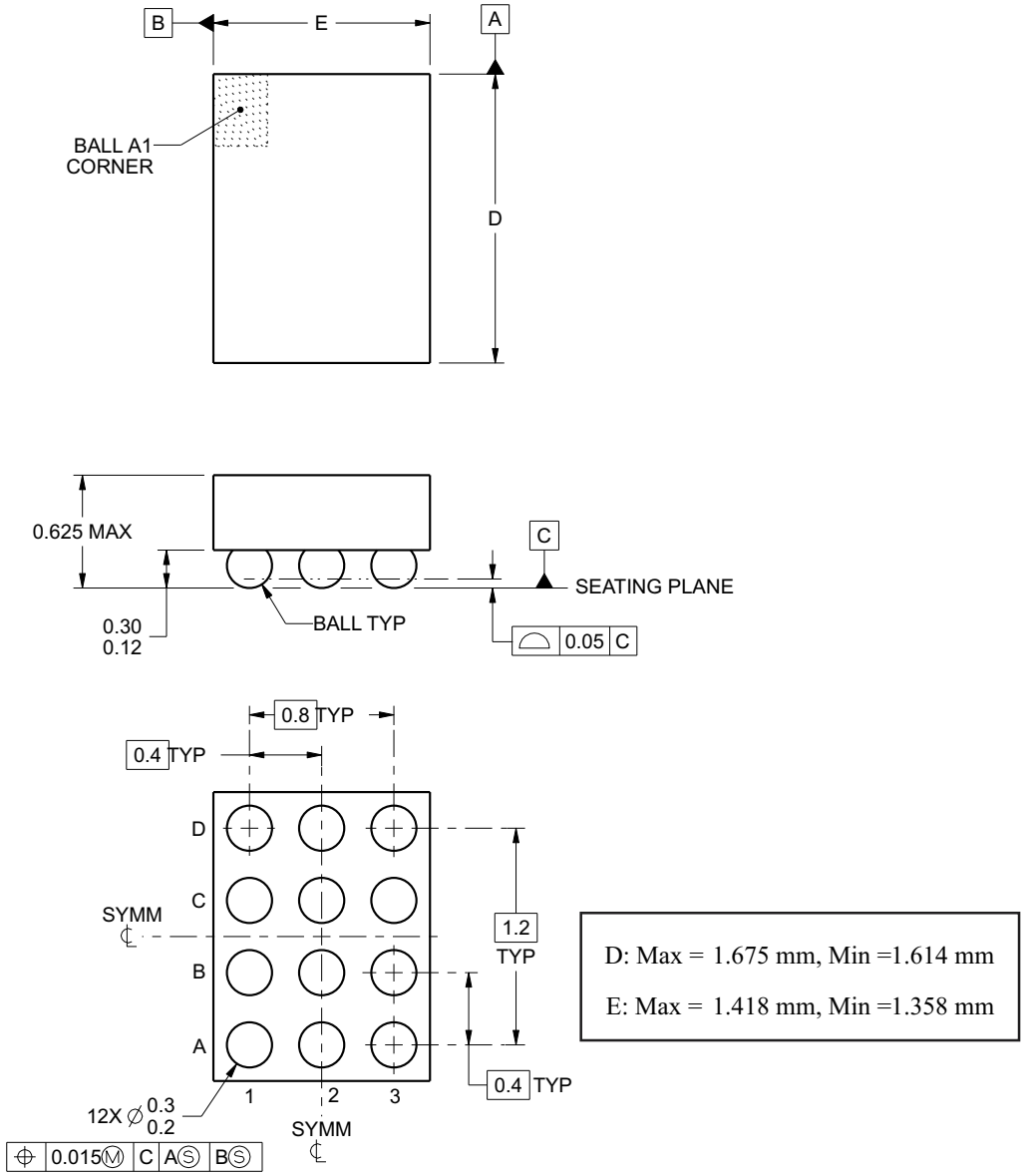

4222191/A 07/2015

NOTES:

1. All linear dimensions are in millimeters. Any dimensions in parenthesis are for reference only. Dimensioning and tolerancing per ASME Y14.5M.
2. This drawing is subject to change without notice.

EXAMPLE BOARD LAYOUT

YFF0012

DSBGA - 0.625 mm max height

DIE SIZE BALL GRID ARRAY

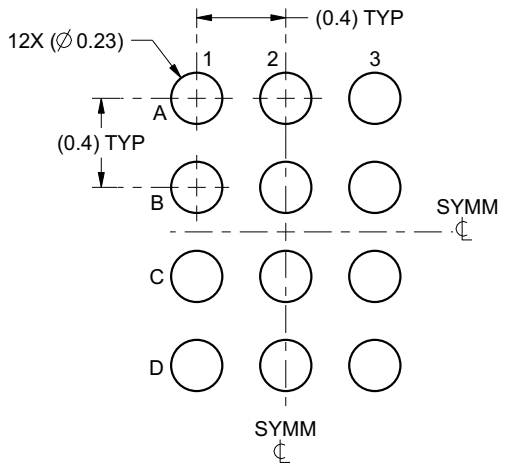

LAND PATTERN EXAMPLE
SCALE:30X

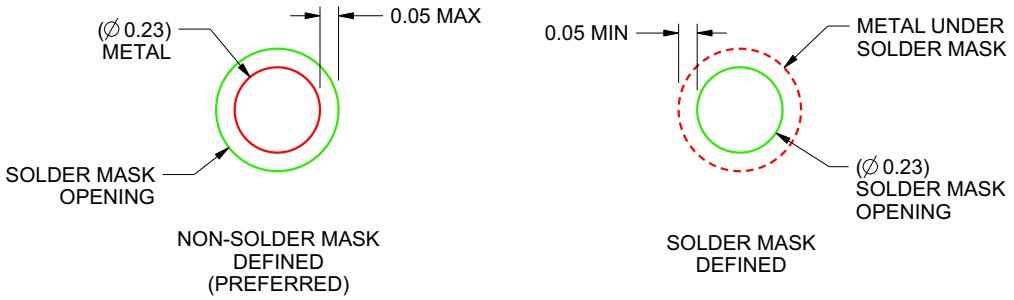

SOLDER MASK DETAILS
NOT TO SCALE

4222191/A 07/2015

NOTES: (continued)

3. Final dimensions may vary due to manufacturing tolerance considerations and also routing constraints. For more information, see Texas Instruments literature number SNVA009 (www.ti.com/lit/snva009).

Copyright © 2022 Texas Instruments Incorporated

EXAMPLE STENCIL DESIGN

YFF0012

DSBGA - 0.625 mm max height

DIE SIZE BALL GRID ARRAY

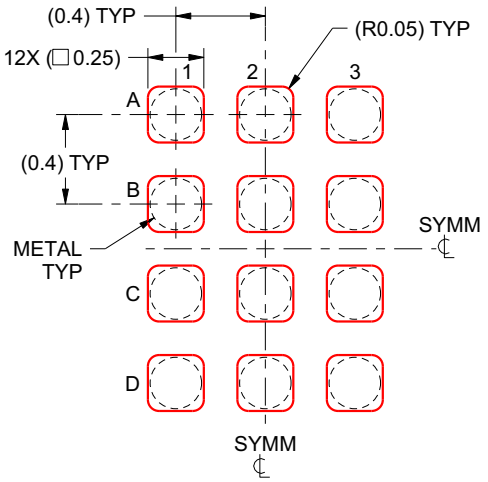

SOLDER PASTE EXAMPLE
BASED ON 0.1 mm THICK STENCIL
SCALE:30X

4222191/A 07/2015

NOTES: (continued)

4. Laser cutting apertures with trapezoidal walls and rounded corners may offer better paste release.

PACKAGING INFORMATION

Orderable part number	Status (1)	Material type (2)	Package | Pins	Package qty | Carrier	RoHS (3)	Lead finish/ Ball material (4)	MSL rating/ Peak reflow (5)	Op temp (°C)	Part marking (6)
INA231AIYFDR	Active	Production	DSBGA (YFD) | 12	3000 | LARGE T&R	Yes	SNAGCU	Level-1-260C-UNLIM	-40 to 125	I231YFD
INA231AIYFDR.B	Active	Production	DSBGA (YFD) | 12	3000 | LARGE T&R	Yes	SNAGCU	Level-1-260C-UNLIM	-40 to 125	I231YFD
INA231AIYFDT	Obsolete	Production	DSBGA (YFD) | 12	-	-	Call TI	Call TI	-40 to 125	I231YFD
INA231AIYFFR	Active	Production	DSBGA (YFF) | 12	3000 | LARGE T&R	Yes	SNAGCU	Level-1-260C-UNLIM	-40 to 125	INA231
INA231AIYFFR.A	Active	Production	DSBGA (YFF) | 12	3000 | LARGE T&R	Yes	SNAGCU	Level-1-260C-UNLIM	-40 to 125	INA231
INA231AIYFFR.B	Active	Production	DSBGA (YFF) | 12	3000 | LARGE T&R	Yes	SNAGCU	Level-1-260C-UNLIM	-40 to 125	INA231
INA231AIYFFT	Obsolete	Production	DSBGA (YFF) | 12	-	-	Call TI	Call TI	-40 to 125	INA231
INA231BIYFDR	Active	Production	DSBGA (YFD) | 12	3000 | LARGE T&R	Yes	SNAGCU	Level-1-260C-UNLIM	-40 to 125	231BYFD
INA231BIYFDR.A	Active	Production	DSBGA (YFD) | 12	3000 | LARGE T&R	Yes	SNAGCU	Level-1-260C-UNLIM	-40 to 125	231BYFD
INA231BIYFDR.B	Active	Production	DSBGA (YFD) | 12	3000 | LARGE T&R	Yes	SNAGCU	Level-1-260C-UNLIM	-40 to 125	231BYFD
INA231BIYFDT	Obsolete	Production	DSBGA (YFD) | 12	-	-	Call TI	Call TI	-40 to 125	231BYFD

(1) **Status:** For more details on status, see our product life cycle.

(2) **Material type:** When designated, preproduction parts are prototypes/experimental devices, and are not yet approved or released for full production. Testing and final process, including without limitation quality assurance, reliability performance testing, and/or process qualification, may not yet be complete, and this item is subject to further changes or possible discontinuation. If available for ordering, purchases will be subject to an additional waiver at checkout, and are intended for early internal evaluation purposes only. These items are sold without warranties of any kind.

(3) **RoHS values:** Yes, No, RoHS Exempt. See the TI RoHS Statement for additional information and value definition.

(4) **Lead finish/Ball material:** Parts may have multiple material finish options. Finish options are separated by a vertical ruled line. Lead finish/Ball material values may wrap to two lines if the finish value exceeds the maximum column width.

(5) **MSL rating/Peak reflow:** The moisture sensitivity level ratings and peak solder (reflow) temperatures. In the event that a part has multiple moisture sensitivity ratings, only the lowest level per JEDEC standards is shown. Refer to the shipping label for the actual reflow temperature that will be used to mount the part to the printed circuit board.

(6) **Part marking:** There may be an additional marking, which relates to the logo, the lot trace code information, or the environmental category of the part.

Multiple part markings will be inside parentheses. Only one part marking contained in parentheses and separated by a "~" will appear on a part. If a line is indented then it is a continuation of the previous line and the two combined represent the entire part marking for that device.

Important Information and Disclaimer: The information provided on this page represents TI's knowledge and belief as of the date that it is provided. TI bases its knowledge and belief on information provided by third parties, and makes no representation or warranty as to the accuracy of such information. Efforts are underway to better integrate information from third parties. TI has taken and continues to take reasonable steps to provide representative and accurate information but may not have conducted destructive testing or chemical analysis on incoming materials and chemicals. TI and TI suppliers consider certain information to be proprietary, and thus CAS numbers and other limited information may not be available for release.

In no event shall TI's liability arising out of such information exceed the total purchase price of the TI part(s) at issue in this document sold by TI to Customer on an annual basis.

TAPE AND REEL INFORMATION

REEL DIMENSIONS

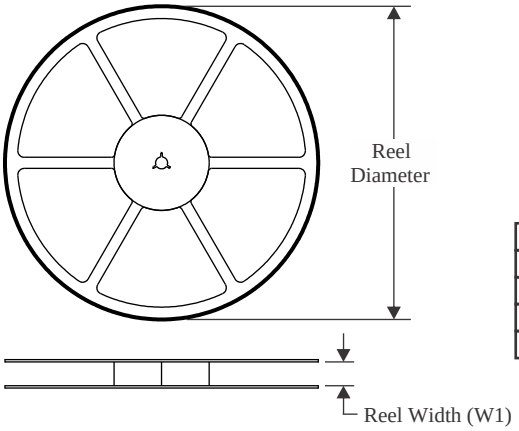

TAPE DIMENSIONS

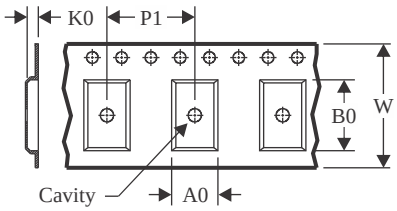

A0	Dimension designed to accommodate the component width
B0	Dimension designed to accommodate the component length
K0	Dimension designed to accommodate the component thickness
W	Overall width of the carrier tape
P1	Pitch between successive cavity centers

QUADRANT ASSIGNMENTS FOR PIN 1 ORIENTATION IN TAPE

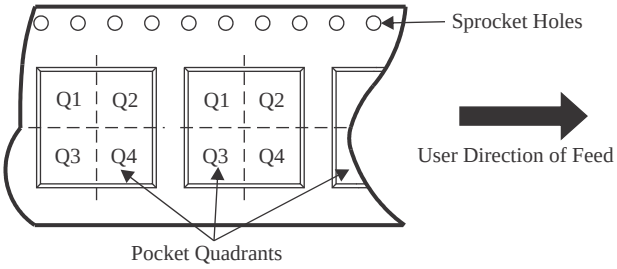

*All dimensions are nominal

Device	Package Type	Package Drawing	Pins	SPQ	Reel Diameter (mm)	Reel Width W1 (mm)	A0 (mm)	B0 (mm)	K0 (mm)	P1 (mm)	W (mm)	Pin1 Quadrant
INA231AIYFDR	DSBGA	YFD	12	3000	180.0	8.4	1.49	1.76	0.5	4.0	8.0	Q1
INA231AIYFFR	DSBGA	YFF	12	3000	180.0	8.4	1.48	1.78	0.69	4.0	8.0	Q1
INA231BIYFDR	DSBGA	YFD	12	3000	180.0	8.4	1.49	1.76	0.5	4.0	8.0	Q1

TAPE AND REEL BOX DIMENSIONS

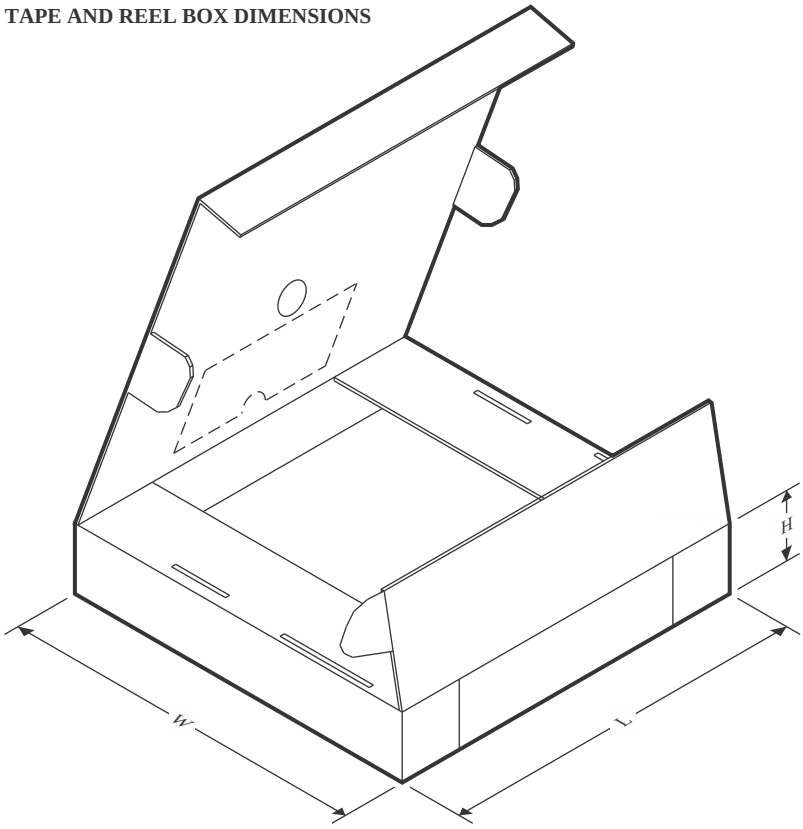

*All dimensions are nominal

Device	Package Type	Package Drawing	Pins	SPQ	Length (mm)	Width (mm)	Height (mm)
INA231AIYFDR	DSBGA	YFD	12	3000	182.0	182.0	20.0
INA231AIYFFR	DSBGA	YFF	12	3000	182.0	182.0	20.0
INA231BIYFDR	DSBGA	YFD	12	3000	182.0	182.0	20.0

重要なお知らせと免責事項

TI は、技術データと信頼性データ (データシートを含みます)、設計リソース (リファレンス デザインを含みます)、アプリケーションや設計に関する各種アドバイス、Web ツール、安全性情報、その他のリソースを、欠陥が存在する可能性のある「現状のまま」提供しており、商品性および特定目的に対する適合性の黙示保証、第三者の知的財産権の非侵害保証を含むいかなる保証も、明示的または黙示的にかかわらず拒否します。

これらのリソースは、TI 製品を使用する設計の経験を積んだ開発者への提供を意図したものです。(1) お客様のアプリケーションに適した TI 製品の選定、(2) お客様のアプリケーションの設計、検証、試験、(3) お客様のアプリケーションに該当する各種規格や、その他のあらゆる安全性、セキュリティ、規制、または他の要件への確実な適合に関する責任を、お客様のみが単独で負うものとします。

上記の各種リソースは、予告なく変更される可能性があります。これらのリソースは、リソースで説明されている TI 製品を使用するアプリケーションの開発の目的でのみ、TI はその使用をお客様に許諾します。これらのリソースに関して、他の目的で複製することや掲載することは禁止されています。TI や第三者の知的財産権のライセンスが付与されている訳ではありません。お客様は、これらのリソースを自身で使用した結果発生するあらゆる申し立て、損害、費用、損失、責任について、TI およびその代理人を完全に補償するものとし、TI は一切の責任を拒否します。

TI の製品は、 TI の販売条件 、 TI の総合的な品質ガイドライン 、 ti.com または TI 製品などに関連して提供される他の適用条件に従い提供されます。TI がこれらのリソースを提供することは、適用される TI の保証または他の保証の放棄の拡大や変更を意味するものではありません。 TI がカスタム、またはカスタマー仕様として明示的に指定していない限り、TI の製品は標準的なカタログに掲載される汎用機器です。

お客様がいかなる追加条項または代替条項を提案する場合も、TI はそれらに異議を唱え、拒否します。

Copyright © 2026, Texas Instruments Incorporated

最終更新日：2025 年 10 月