TEXAS INSTRUMENTS
INA293-Q1
JAJSHG2C – MAY 2019 – REVISED AUGUST 2022

INA293-Q1 AEC-Q100、–4V～110V、1.3MHz 超高精度電流センス・アンプ

1 特長

- 車載アプリケーション向けに AEC-Q100 認証済み
  - 温度グレード 1:–40℃～+125℃、T_A
- 機能安全対応
  - 機能安全システムの設計に役立つ資料を利用可能
- 広い同相電圧範囲
  - 動作電圧:−4V～+110V
  - 残存電圧:−20V～+120V
- 非常に優れた CMRR
  - 160dB の DC-CMRR
  - 50kHz で 85dB の AC-CMRR
- 精度
  - ゲイン
    - ゲイン誤差:±0.15% 以下
    - ゲイン・ドリフト:±10ppm/℃以下
  - オフセット
    - オフセット電圧:±15µV (標準値)
    - オフセット・ドリフト:±0.05µV/℃ (標準値)
- 利用可能なゲイン:
  - INA293A1-Q1、INA293B1-Q1:20V/V
  - INA293A2-Q1、INA293B2-Q1:50V/V
  - INA293A3-Q1、INA293B3-Q1:100V/V
  - INA293A4-Q1、INA293B4-Q1:200V/V
  - INA293A5-Q1、INA293B5-Q1:500V/V
- 高帯域幅:1.3MHz
- スルーレート:2.5V/µs
- 静止電流:1.5mA

2 アプリケーション

- 48V 車載用
- ソレノイド制御
- 48V DC/DC コンバータ
- バルブ制御

3 概要

INA293-Q1 は、–4V～110V の広い同相電圧範囲にわたってシャント抵抗両端の電圧降下を測定できる高精度電流センス・アンプです。負の同相電圧に対応しているおかげで、グランドを下回る電位でも動作できるため、ハーフブリッジ・アプリケーションの循環電流を高精度で測定できます。低いオフセット電圧、小さなゲイン誤差、高い DC CMRR を兼ね備えているため、高精度の電流測定が可能です。INA293-Q1 は、DC 電流測定だけではなく、1.3MHz の高帯域幅と 85dB の AC CMRR (50kHz 時) により、高速アプリケーション (例:高速過電流保護) にも適しています。

INA293-Q1 は 2.7V～20V の単一電源で動作し、消費電流は 1.5mA です。INA293-Q1 は次のゲインを持つ 5 種類のバリアントを提供しています。20V/V 、50V/V 、100V/V、200V/V、500V/V。これらのゲインを選択できるため、ダイナミック・レンジの広い電流センシング・アプリケーションに対応できます。

INA293-Q1 は −40℃～+125℃の温度範囲で動作が規定されており、省スペースの SOT-23 パッケージで供給されます (2 つのピン配置バリアントがあります)。

製品情報(1)

部品番号	パッケージ	本体サイズ (公称)
INA293-Q1	SOT-23 (5)	2.90mm × 1.60mm

(1) 提供されているすべてのパッケージについては、データシートの末尾にあるパッケージ・オプションについての付録を参照してください。

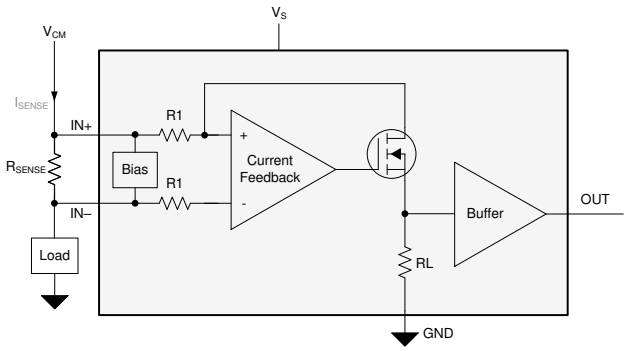

機能ブロック図

英語版の TI 製品についての情報を翻訳したこの資料は、製品の概要を確認する目的で便宜的に提供しているものです。該当する正式な英語版の最新情報は、www.ti.com で閲覧でき、その内容が常に優先されます。TI では翻訳の正確性および妥当性につきましては一切保証いたしません。実際の設計などの前には、必ず最新版の英語版をご参照くださいますようお願いいたします。

Table of Contents

1 特長.....1
2 アプリケーション.....1
3 概要.....1
4 Revision History.....2
5 Pin Configuration and Functions.....3
6 Specifications.....4
6.1 Absolute Maximum Ratings.....4
6.2 ESD Ratings.....4
6.3 Recommended Operating Conditions.....5
6.4 Thermal Information.....5
6.5 Electrical Characteristics.....5
6.6 Typical Characteristics.....7
7 Detailed Description.....13
7.1 Overview.....13
7.2 Functional Block Diagram.....13
7.3 Feature Description.....13
7.4 Device Functional Modes.....15
8 Application and Implementation.....16
8.1 Application Information.....16
8.2 Typical Application.....18
8.3 Power Supply Recommendations.....19
8.4 Layout.....19
9 Device and Documentation Support.....21
9.1 Documentation Support.....21
9.2 Receiving Notification of Documentation Updates.....21
9.3 サポート・リソース.....21
9.4 Trademarks.....21
9.5 Electrostatic Discharge Caution.....21
9.6 Glossary.....21
10 Mechanical, Packaging, and Orderable Information.....21

4 Revision History

Changes from Revision B (June 2021) to Revision C (August 2022) — **Page**

- Changed 式 5 17
- Moved the *Power Supply Recommendations* and *Layout* sections to the *Application and Implementation* section.....19

Changes from Revision A (September 2020) to Revision B (June 2021) — **Page**

- データシートのタイトルを INA293-Q1 AEC-Q100、–4V～110V、1MHz、高精度電流検出アンプから INA293-Q1 AEC-Q100、–4V～110V、1.3MHz、高精度電流検出アンプに変更.....1

Changes from Revision * (May 2019) to Revision A (September 2020) — **Page**

- データシートのタイトルを変更.....1
- データシート・ステータスを「事前情報」から「量産データ」に変更.....1
- 文書全体にわたって表、図、相互参照の採番方法を更新.....1
- 「*特長*」セクションに機能安全対応の箇条書き項目を追加.....1
- 「*概要*」セクションの「高精度」を「超高精度」に変更.....1

Copyright © 2022 Texas Instruments Incorporated

5 Pin Configuration and Functions

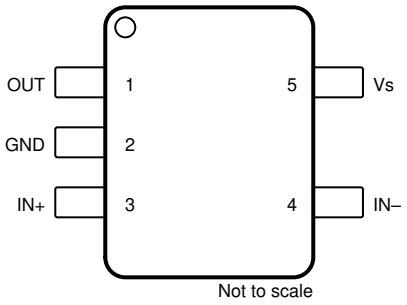

図 5-1. INA293A-Q1: DBV Package 5-Pin SOT-23 Top View

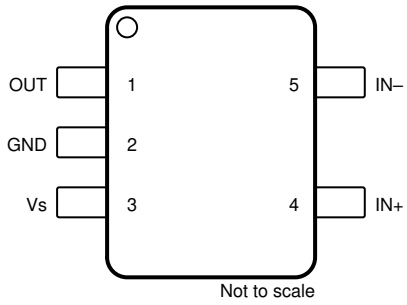

図 5-2. INA293B-Q1: DBV Package 5-Pin SOT-23 Top View

表 5-1. Pin Functions

PIN			TYPE	DESCRIPTION
NAME	INA293A-Q1	INA293B-Q1		
GND	2	2	Ground	Ground
OUT	1	1	Output	Output voltage
Vs	5	3	Power	Power supply
IN+	3	4	Input	Shunt resistor positive sense input
IN–	4	5	Input	Shunt resistor negative sense input

Copyright © 2022 Texas Instruments Incorporated

6 Specifications

6.1 Absolute Maximum Ratings

over operating free-air temperature range (unless otherwise noted)(1)

		MIN	MAX	UNIT
Supply Voltage (V_S)		–0.3	22	V
Analog Inputs, V_{IN+}, $V_{IN–}$ (2)	Differential (V_{IN+}) – ($V_{IN–}$), INA293A5-Q1, INA293B5-Q1	–6	6	V
	Differential (V_{IN+}) – ($V_{IN–}$), All others	–12	12	
	Common - mode	–20	120	
Output		GND – 0.3	Vs + 0.3	V
T_A	Operating temperature	–55	150	°C
T_J	Junction temperature		150	°C
T_{stg}	Storage temperature	–65	150	°C

(1) Stresses beyond those listed under *Absolute Maximum Rating* may cause permanent damage to the device. These are stress ratings only, which do not imply functional operation of the device at these or any other conditions beyond those indicated under *Recommended Operating Condition*. Exposure to absolute-maximum-rated conditions for extended periods may affect device reliability.
(2) VIN+ and VIN– are the voltages at the IN+ and IN– pins, respectively.

6.2 ESD Ratings

			VALUE	UNIT
$V_{(ESD)}$	Electrostatic discharge	Human body model (HBM), per AEC Q100-002, all pins(1) HBM ESD Classification Level 2	±2000	V
		Charged device model (CDM), per AEC Q100-011, all pins CDM ESD Classification Level C6	±1000	

(1) AEC Q100-002 indicates that HBM stressing shall be in accordance with the ANSI/ESDA/JEDEC JS-001 specification

Copyright © 2022 Texas Instruments Incorporated

6.3 Recommended Operating Conditions

over operating free-air temperature range (unless otherwise noted)

		MIN	NOM	MAX	UNIT
V_{CM}	Common-mode input range	–4	48	110	V
V_S	Operating supply range	2.7	5	20	V
V_{SENSE}	Differential sense input range	0		V_S / G	V
T_A	Ambient temperature	–40		125	°C

6.4 Thermal Information

THERMAL METRIC(1)		INA293-Q1 DBV (SOT-23) 5 PINS	UNIT
$R_{\theta JA}$	Junction-to-ambient thermal resistance	184.7	°C/W
$R_{\theta JC(top)}$	Junction-to-case (top) thermal resistance	105.6	°C/W
$R_{\theta JB}$	Junction-to-board thermal resistance	47.2	°C/W
Ψ_{JT}	Junction-to-top characterization parameter	21.5	°C/W
Ψ_{JB}	Junction-to-board characterization parameter	46.9	°C/W
$R_{\theta JC(bot)}$	Junction-to-case (bottom) thermal resistance	N/A	°C/W

(1) For more information about traditional and new thermal metrics, see the Semiconductor and IC Package Thermal Metrics application report.

6.5 Electrical Characteristics

at T_A = 25 °C, V_S = 5 V, V_{SENSE} = V_{IN+} - V_{IN-} = 0.5 V / Gain, V_{CM} = V_{IN-} = 48 V (unless otherwise noted)

PARAMETER		TEST CONDITIONS	MIN	TYP	MAX	UNIT
INPUT						
V_{CM}	Common-mode input range(1)	T_A = -40°C to +125°C	–4		110	V
CMRR	Common-mode rejection ratio, input referred	-4 V ≤ V_{CM} ≤ 110 V, T_A = -40°C to +125°C	140	160		dB
		f = 50 kHz		85		dB
V_{os}	Offset voltage, input referred	INA293x1-Q1		±30	±150	µV
		INA293x2-Q1		±15	±80	
		INA293x3-Q1		±10	±50	
		INA293x4-Q1		±5	±30	
		INA293x5-Q1		±2	±20	
dV_{os}/dT	Offset voltage drift	T_A = -40°C to +125°C, INA293x1-Q1, INA293x2-Q1, INA293x3-Q1		±0.05	±0.5	µV/°C
		T_A = -40°C to +125°C, INA293x4-Q1, INA293x5-Q1		±0.025	±0.25	
PSRR	Power supply rejection ratio, input referred	INA293x1-Q1, 2.7 V ≤ V_S ≤ 20 V, T_A = -40°C to +125°C		±1	±8	µV/V
		INA293x2-Q1, INA293x3-Q1, 2.7 V ≤ V_S ≤ 20 V, T_A = -40°C to +125°C		±0.3	±3	
		INA293x4-Q1, INA293x5-Q1, 2.7 V ≤ V_S ≤ 20 V, T_A = -40°C to +125°C		±0.1	±1	
I_B	Input bias current	I_{B+}, V_{SENSE} = 0 V	10	20	30	uA
		I_{B-}, V_{SENSE} = 0 V	10	20	30	uA

Copyright © 2022 Texas Instruments Incorporated

6.5 Electrical Characteristics (continued)

at T_A = 25 °C, V_S = 5 V, V_{SENSE} = V_{IN+} - V_{IN-} = 0.5 V / Gain, V_{CM} = V_{IN-} = 48 V (unless otherwise noted)

PARAMETER		TEST CONDITIONS	MIN	TYP	MAX	UNIT
OUTPUT						
G	Gain	INA293x1-Q1		20		V/V
		INA293x2-Q1		50		V/V
		INA293x3-Q1		100		V/V
		INA293x4-Q1		200		V/V
		INA293x5-Q1		500		V/V
G_{ERR}	Gain error	GND + 50 mV ≤ V_{OUT} ≤ V_S – 200 mV		±0.02	±0.15	%
		T_A = -40°C to +125°C		±1	±10	ppm/°C
NL_{ERR}	Nonlinearity error			0.01		%
	Maximum capacitive load	No sustained oscillations, no isolation resistor		500		pF
VOLTAGE OUTPUT						
	Swing to Vs (Power supply rail)	R_{LOAD} = 10 kΩ, T_A = -40°C to +125°C		Vs – 0.07	Vs – 0.15	V
	Swing to ground	R_{LOAD} = 10 kΩ, V_{SENSE} = 0 V, T_A = -40°C to +125°C		0.005	0.02	V
FREQUENCY RESPONSE						
BW	Bandwidth	INA293x1-Q1, C_{LOAD} = 5 pF, V_{SENSE} = 200 mV		1300		kHz
		INA293x2-Q1, C_{LOAD} = 5 pF, V_{SENSE} = 80 mV		1300		
		INA293x3-Q1, C_{LOAD} = 5 pF, V_{SENSE} = 40 mV		1000		
		INA293x4-Q1, C_{LOAD} = 5 pF, V_{SENSE} = 20 mV		900		
		INA293x5-Q1, C_{LOAD} = 5 pF, V_{SENSE} = 8 mV		900		
SR	Slew rate	Rising edge		2.5		V/µs
	Settling time	V_{OUT} = 4 V ± 0.1 V step, Output settles to 0.5%		10		µs
		V_{OUT} = 4 V ± 0.1 V step, Output settles to 1%		5		
		V_{OUT} = 4 V ± 0.1 V step, Output settles to 5%		1		
NOISE						
Ven	Voltage noise density			50		nV/√Hz
POWER SUPPLY						
Vs	Supply voltage	T_A = –40°C to +125°C	2.7		20	V
I_Q	Quiescent current			1.5	2	mA
		T_A = -40°C to +125°C			2.25	mA

(1) Common-mode voltage at both V_{IN+} and V_{IN-} must not exceed the specified common-mode input range.

Copyright © 2022 Texas Instruments Incorporated

6.6 Typical Characteristics

All specifications at T_A = 25 °C, V_S = 5 V, V_{SENSE} = V_{IN+} – V_{IN-} = 0.5 V / Gain, V_{CM} = $V_{IN–}$ = 48 V, unless otherwise noted.

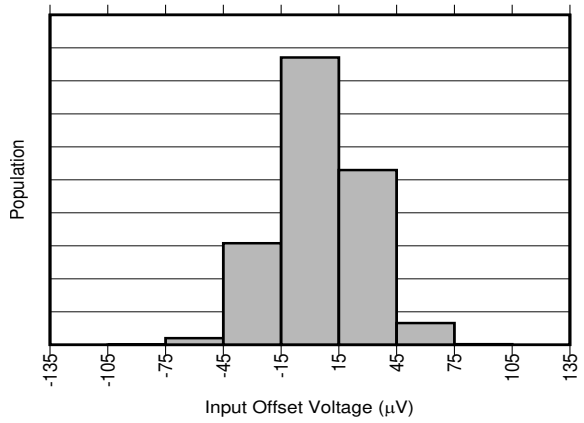

図 6-1. INA293x1 Input Offset Production Distribution

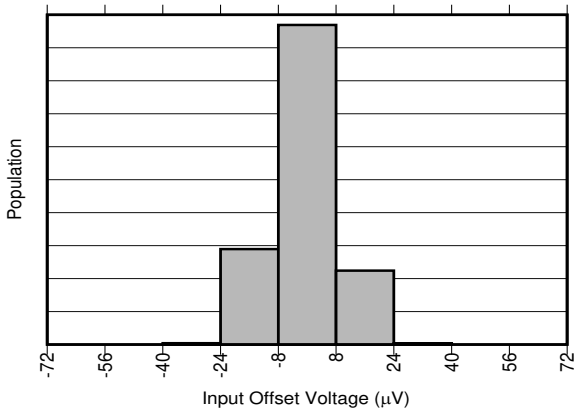

図 6-2. INA293x2 Input Offset Production Distribution

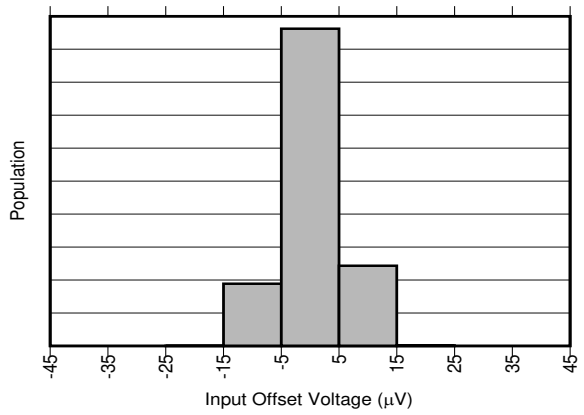

図 6-3. INA293x3 Input Offset Production Distribution

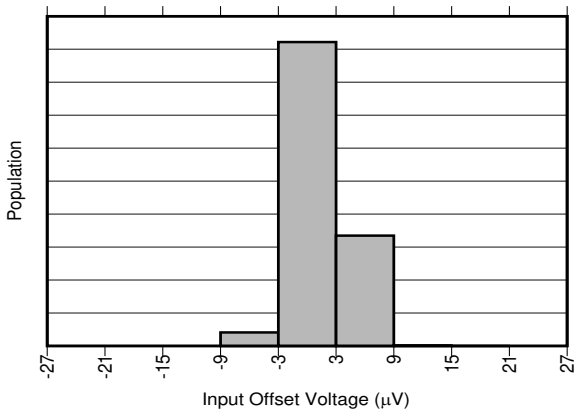

図 6-4. INA293x4 Input Offset Production Distribution

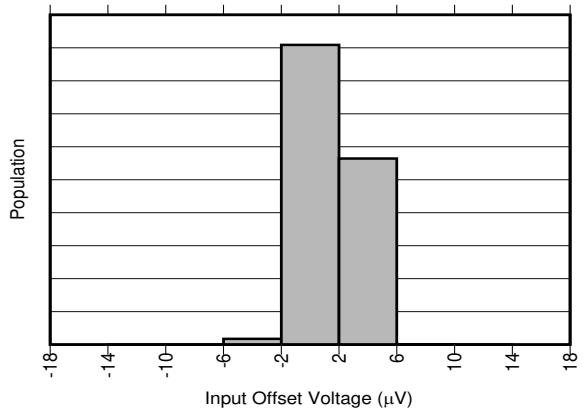

図 6-5. INA293x5 Input Offset Production Distribution

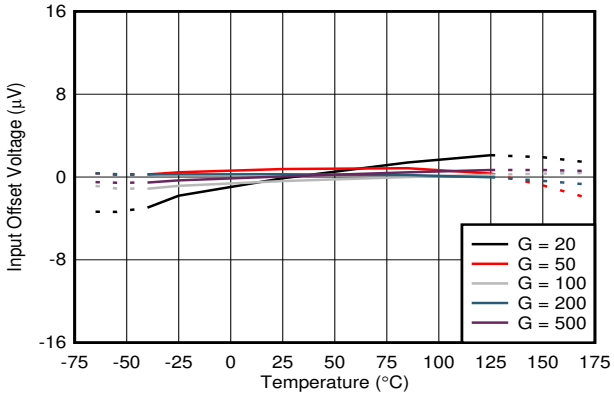

図 6-6. Input Offset Voltage vs Temperature

6.6 Typical Characteristics (continued)

All specifications at T_A = 25 °C, V_S = 5 V, V_{SENSE} = V_{IN+} – V_{IN-} = 0.5 V / Gain, V_{CM} = $V_{IN–}$ = 48 V, unless otherwise noted.

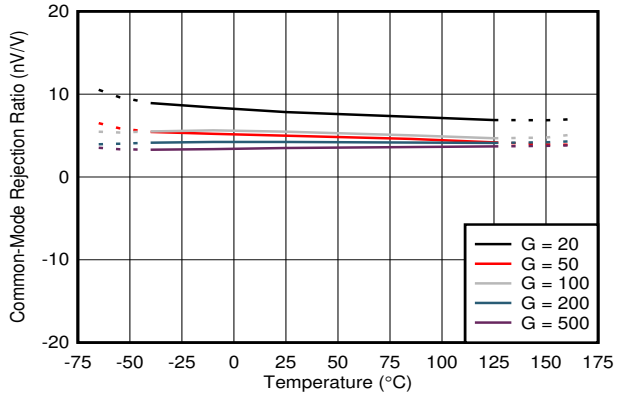

図 6-7. Common-Mode Rejection Ratio vs Temperature

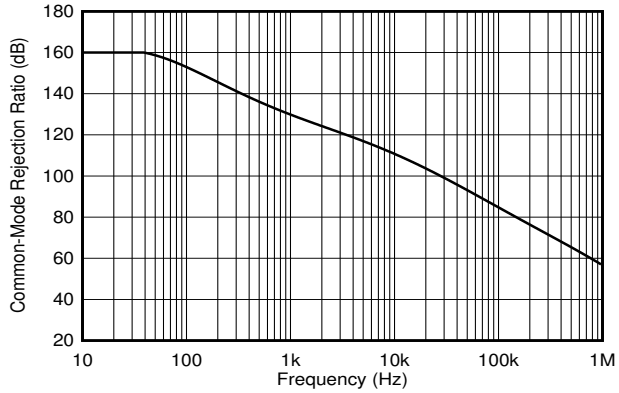

図 6-8. Common-Mode Rejection Ratio vs Frequency

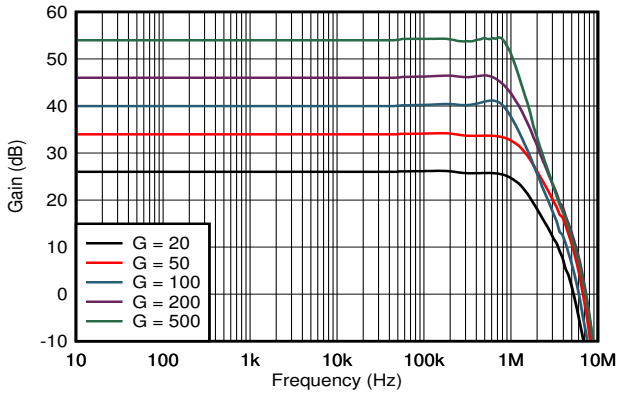

図 6-9. Gain vs Frequency

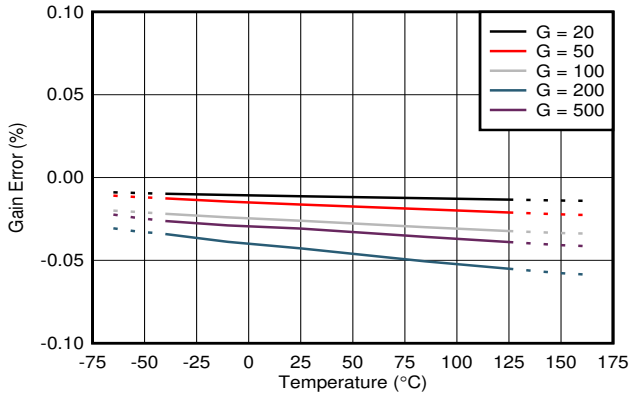

図 6-10. Gain Error vs Temperature

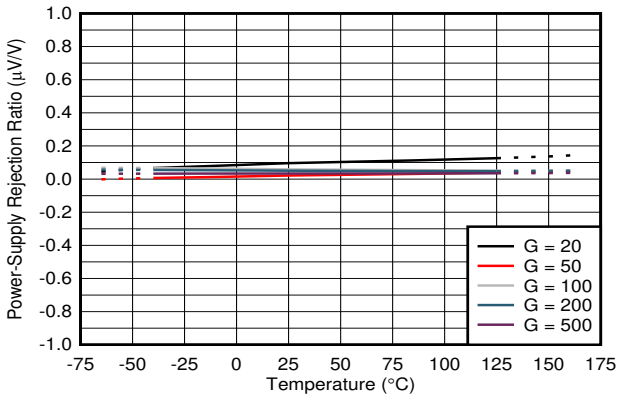

図 6-11. Power-Supply Rejection Ratio vs Temperature

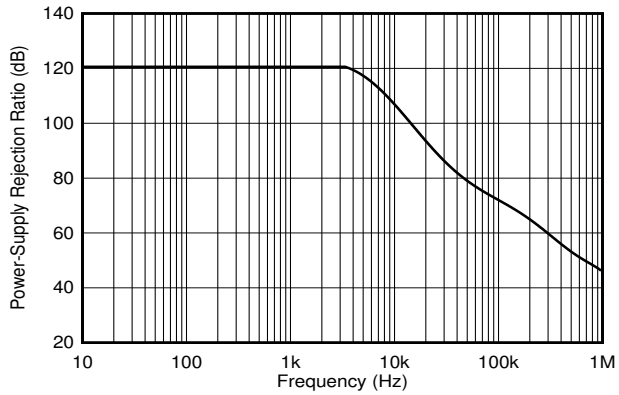

図 6-12. Power-Supply Rejection Ratio vs Frequency

Copyright © 2022 Texas Instruments Incorporated

6.6 Typical Characteristics (continued)

All specifications at T_A = 25 °C, V_S = 5 V, V_{SENSE} = V_{IN+} – V_{IN-} = 0.5 V / Gain, V_{CM} = $V_{IN–}$ = 48 V, unless otherwise noted.

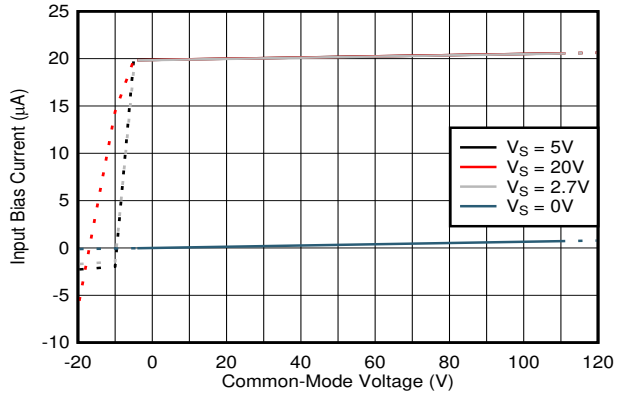

V_{SENSE} = 0 V

図 6-13. Input Bias Current vs Common-Mode Voltage

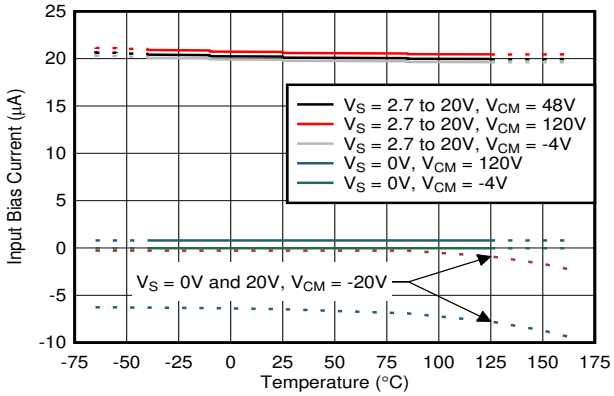

図 6-14. Input Bias Current vs Temperature

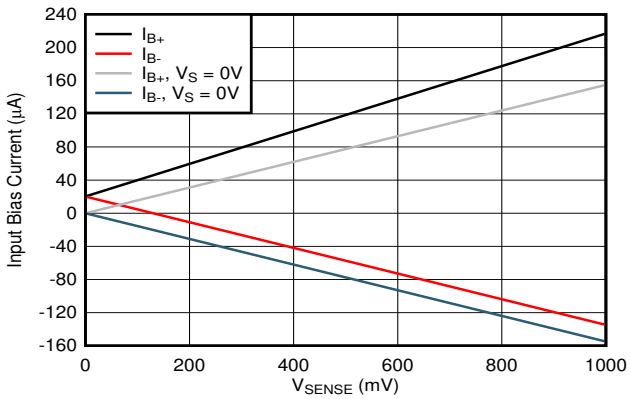

図 6-15. INA293x1Q Input Bias Current vs V_{SENSE}

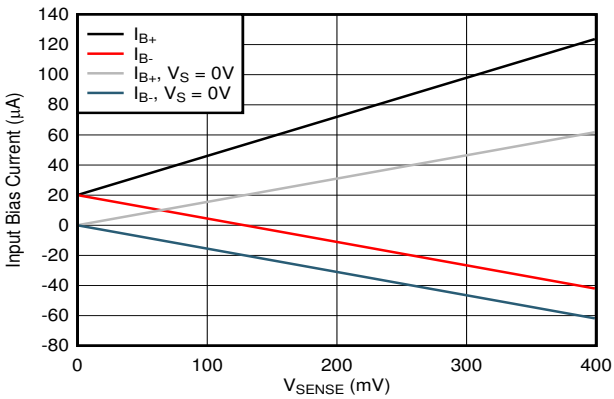

図 6-16. INA293x2Q, INA293x3Q Input Bias Current vs V_{SENSE}

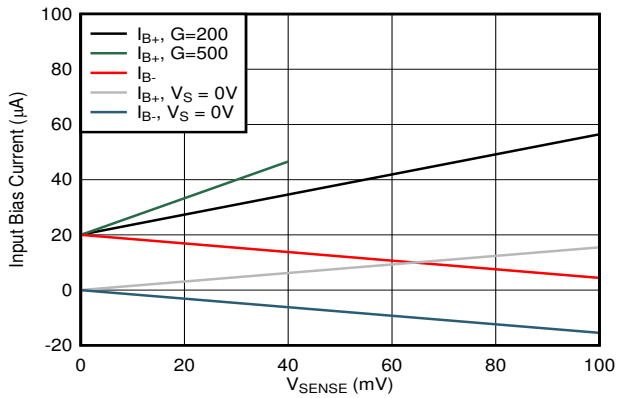

図 6-17. INA293x4Q, INA293x5Q Input Bias Current vs V_{SENSE}

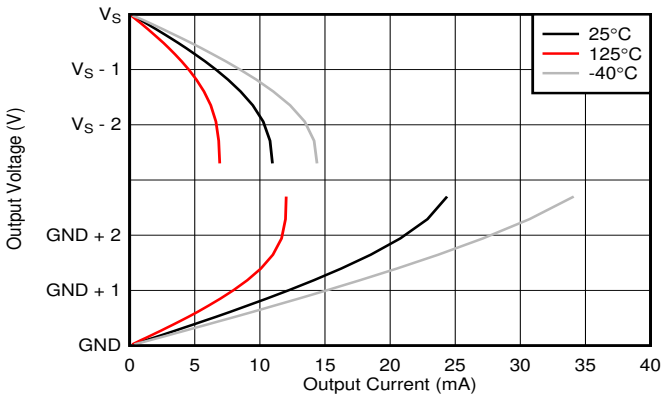

V_S = 2.7 V

図 6-18. Output Voltage vs Output Current

6.6 Typical Characteristics (continued)

All specifications at T_A = 25 °C, V_S = 5 V, V_{SENSE} = V_{IN+} – V_{IN-} = 0.5 V / Gain, V_{CM} = $V_{IN–}$ = 48 V, unless otherwise noted.

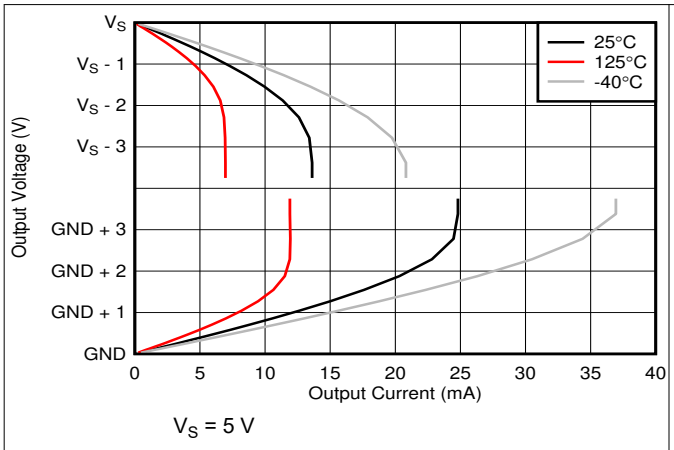

V_S = 5 V

図 6-19. Output Voltage vs Output Current

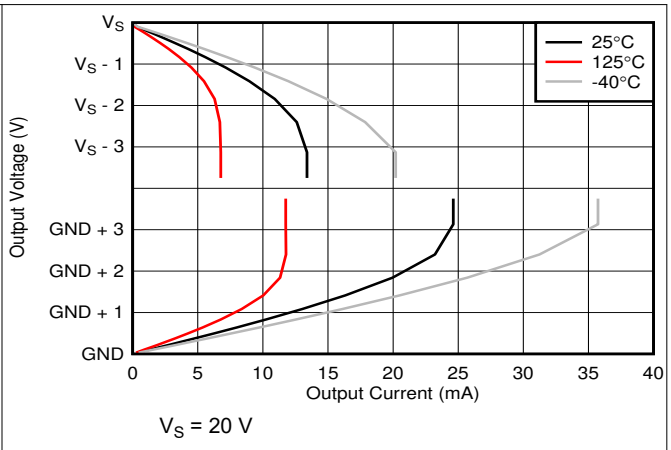

V_S = 20 V

図 6-20. Output Voltage vs Output Current

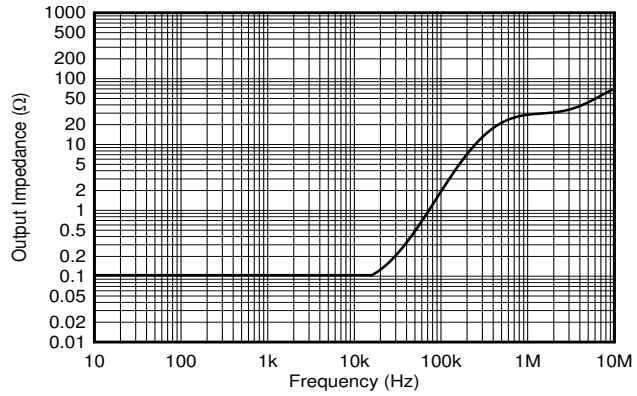

図 6-21. Output Impedance vs Frequency

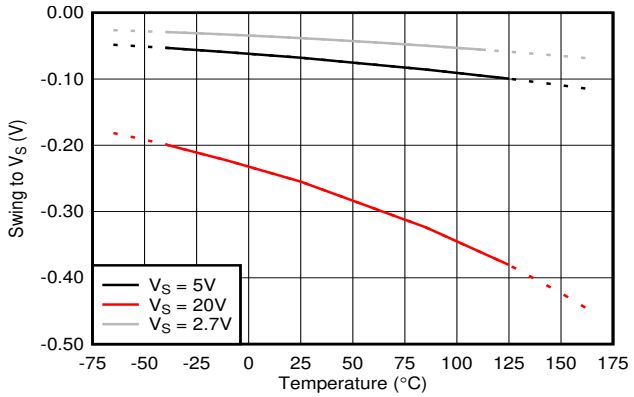

図 6-22. Swing to Supply vs Temperature

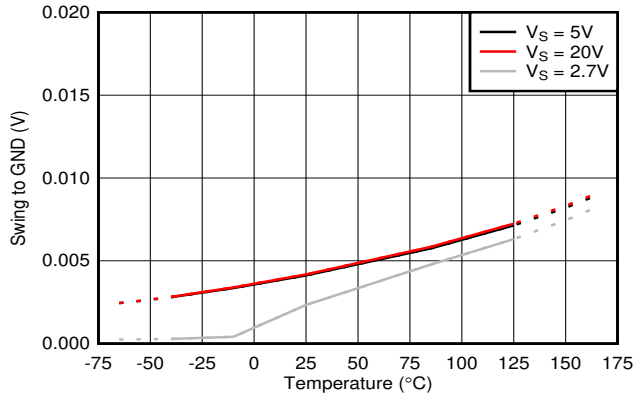

図 6-23. Swing to GND vs Temperature

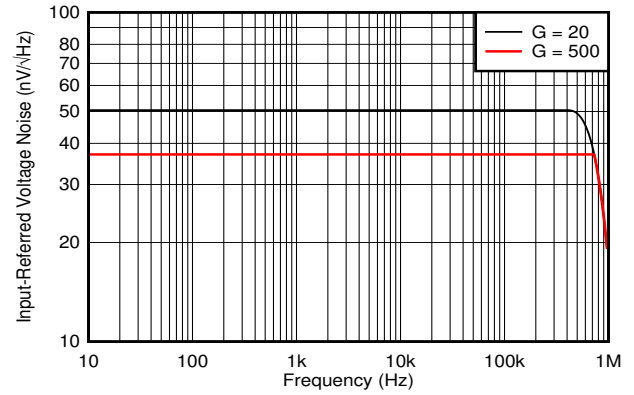

図 6-24. Input Referred Noise vs Frequency

Copyright © 2022 Texas Instruments Incorporated

6.6 Typical Characteristics (continued)

All specifications at T_A = 25 °C, V_S = 5 V, V_{SENSE} = V_{IN+} – V_{IN-} = 0.5 V / Gain, V_{CM} = $V_{IN–}$ = 48 V, unless otherwise noted.

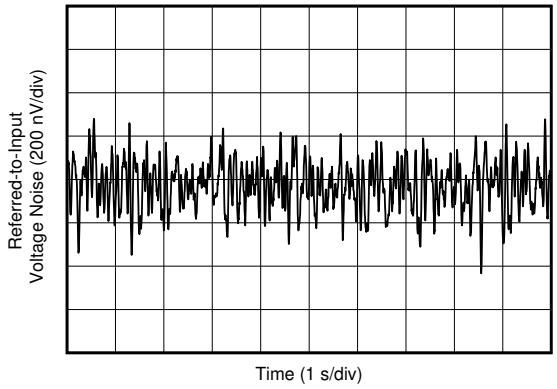

図 6-25. Input Referred Noise

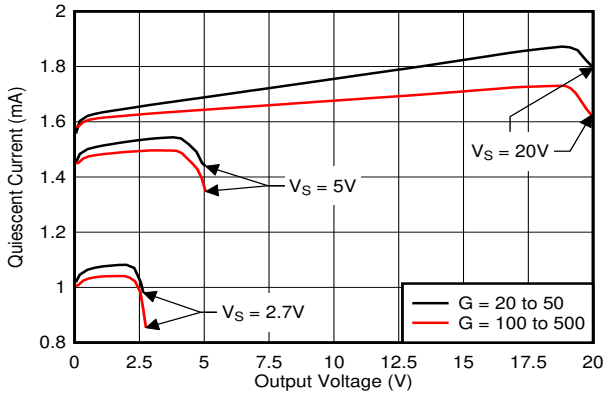

図 6-26. Quiescent Current vs Output Voltage

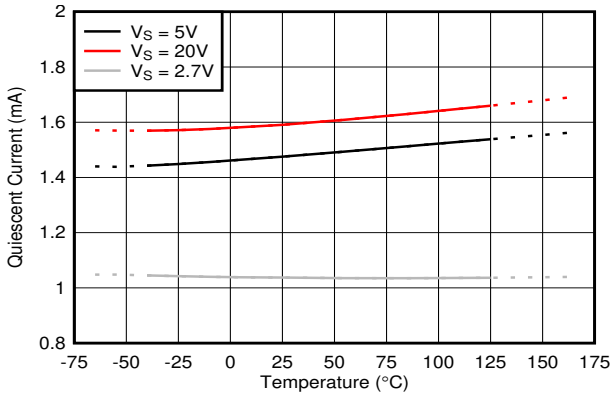

図 6-27. Quiescent Current vs Temperature

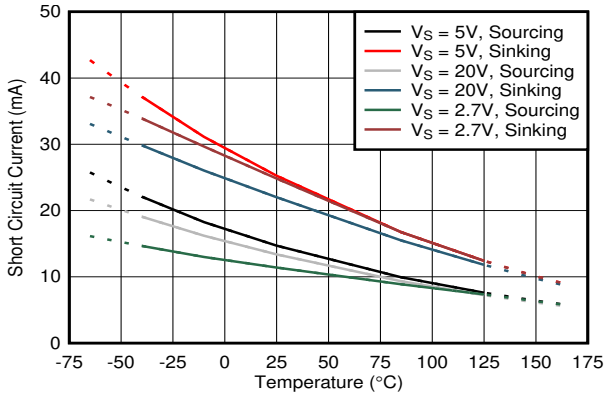

図 6-28. Short-Circuit Current vs Temperature

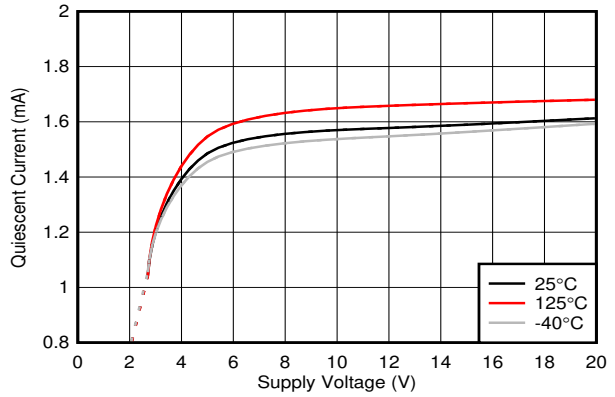

図 6-29. Quiescent Current vs Supply Voltage

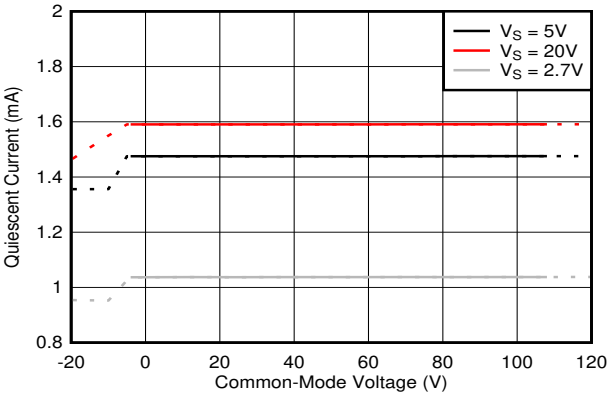

図 6-30. Quiescent Current vs Common-Mode Voltage

Copyright © 2022 Texas Instruments Incorporated

6.6 Typical Characteristics (continued)

All specifications at T_A = 25 °C, V_S = 5 V, V_{SENSE} = V_{IN+} – V_{IN-} = 0.5 V / Gain, V_{CM} = $V_{IN–}$ = 48 V, unless otherwise noted.

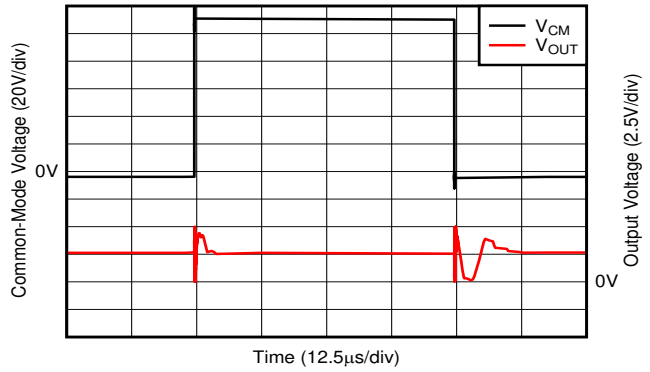

図 6-31. Common-Mode Voltage Fast Transient Pulse

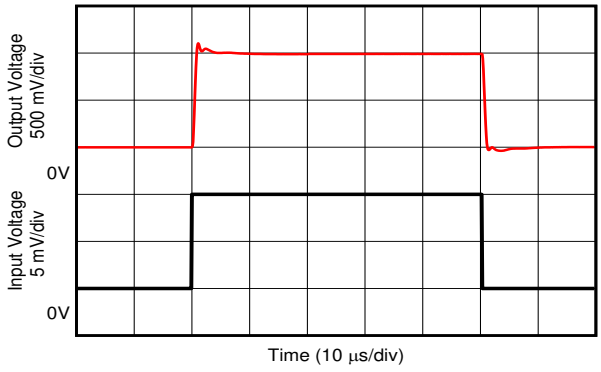

図 6-32. INA293x3 Step Response

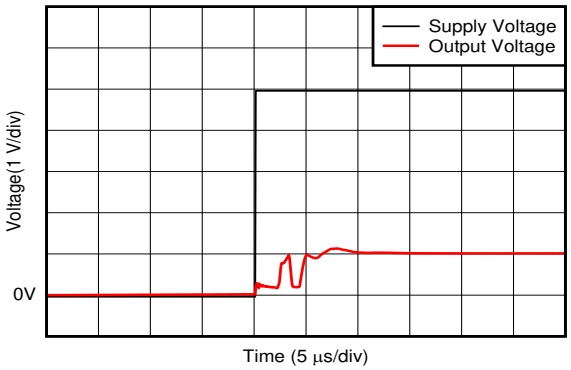

図 6-33. Start-Up Response

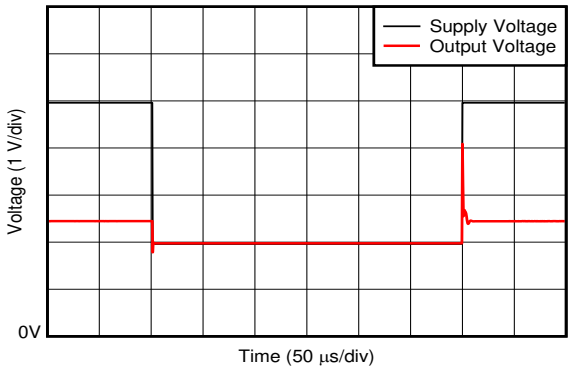

図 6-34. Supply Transient Response

Copyright © 2022 Texas Instruments Incorporated

7 Detailed Description

7.1 Overview

The INA293-Q1 is a high- or low-side current-sense amplifier that offers a wide common-mode range, precision zero-drift topology, excellent common-mode rejection ratio (CMRR), high bandwidth and fast slew rate. Different gain versions are available to optimize the output dynamic range based on the application. The INA293-Q1 is designed using a transconductance architecture with a current-feedback amplifier that enables low bias currents of 20 µA with a common-mode voltage of 110 V.

7.2 Functional Block Diagram

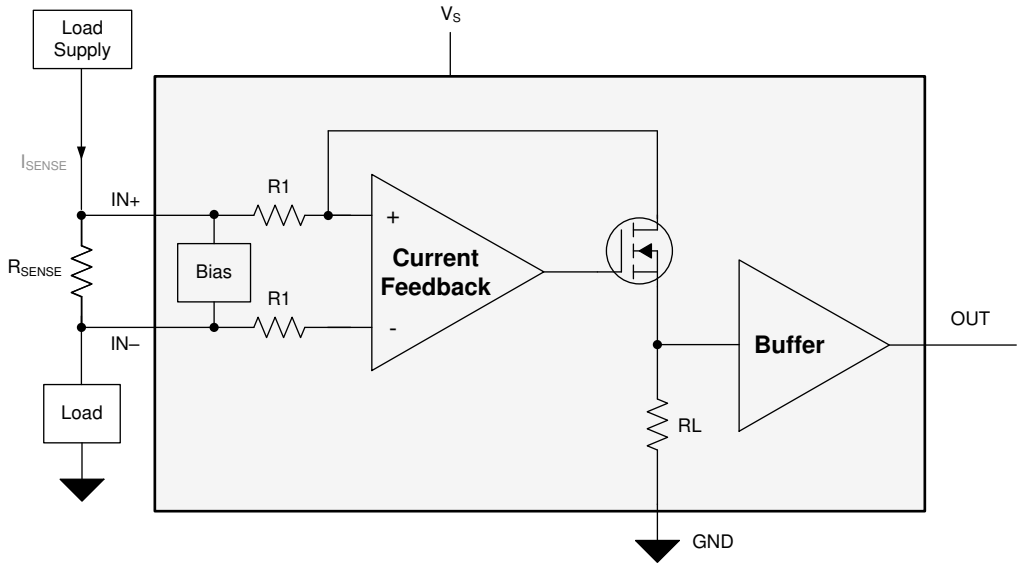

7.3 Feature Description

7.3.1 Amplifier Input Common-Mode Signal

The INA293-Q1 supports large input common-mode voltages from –4 V to +110 V. Because of the internal topology, the common-mode range is not restricted by the power-supply voltage (V_S). This allows for the INA293-Q1 to be used for both low and high side current-sensing applications.

7.3.1.1 Input-Signal Bandwidth

The INA293-Q1 –3-dB bandwidth is gain dependent, with several gain options of 20 V/V, 50 V/V, 100 V/V, 200 V/V, and 500 V/V. The unique multistage design enables the amplifier to achieve high bandwidth at all gains. This high bandwidth provides the throughput and fast response that is required for the rapid detection and processing of overcurrent events.

The bandwidth of the device also depends on the applied V_{SENSE} voltage. 図 7-1 shows the bandwidth performance profile of the device over frequency as output voltage increases for each gain variation. As shown in 図 7-1, the device exhibits the highest bandwidth with higher V_{SENSE} voltages, and the bandwidth is higher with lower device gain options. Individual requirements determine the acceptable limits of error for high frequency current-sensing applications. Testing and evaluation in the end application or circuit is required to determine the acceptance criteria, and to validate that the performance levels meet the system specifications.

Copyright © 2022 Texas Instruments Incorporated

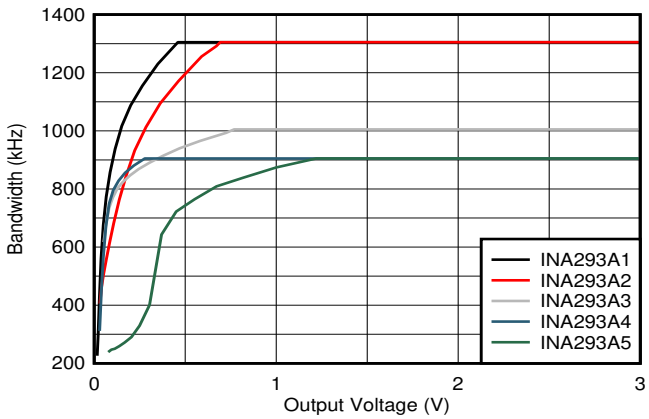

図 7-1. Bandwidth vs Output Voltage

7.3.1.2 Low Input Bias Current

The INA293-Q1 inputs draw a 20-µA (typical) bias current at a common-mode voltage as high as 110 V, which enables precision current sensing on applications that require lower current leakage.

7.3.1.3 Low V_{SENSE} Operation

The INA293-Q1 operates with high performance across the entire valid V_{SENSE} range. The zero-drift input architecture of the INA293-Q1 provides the low offset voltage and low offset drift needed to measure low V_{SENSE} levels accurately across the wide operating temperature of –40 °C to +125 °C. Low V_{SENSE} operation is particularly beneficial when using low ohmic shunts for low current measurements, as power losses across the shunt are significantly reduced.

7.3.1.4 Wide Fixed Gain Output

The INA293-Q1 gain error is < 0.15% at room temperature, with a maximum drift of 10 ppm/°C over the full temperature range of –40°C to +125°C. The INA293-Q1 is available in multiple gain options of 20 V/V, 50 V/V, 100 V/V, 200 V/V, and 500 V/V, which the system designer should select based on their desired signal-to-noise ratio and other system requirements.

The INA293-Q1 closed-loop gain is set by a precision, low drift internal resistor network. The ratio of these resistors are excellently matched, while the absolute values may vary significantly. Adding additional resistance around the INA293-Q1 to change the effective gain is not recommended, however, because of this variation. The typical values of the gain resistors are described in 表 7-1.

表 7-1. Fixed Gain Resistor

GAIN	R1	RL
20 (V/V)	25 kΩ	500 kΩ
50 (V/V)	10 kΩ	500 kΩ
100 (V/V)	10 kΩ	1000 kΩ
200 (V/V)	5 kΩ	1000 kΩ
500 (V/V)	2 kΩ	1000 kΩ

7.3.1.5 Wide Supply Range

The INA293-Q1 operates with a wide supply range from 2.7 V to 20 V. The output stage supports a wide output range while INA293-Q1x1 (gain of 20 V/V) at a supply voltage of 20 V allows a maximum acceptable differential input of 1 V. When paired with the small input offset voltage of the INA293-Q1, systems with very wide dynamic range of current measurement can be supported.

Copyright © 2022 Texas Instruments Incorporated

7.4 Device Functional Modes

7.4.1 Unidirectional Operation

The INA293-Q1 measures the differential voltage developed by current flowing through a resistor, commonly referred to as a current-sensing resistor or a current-shunt resistor. The INA293-Q1 operates in unidirectional mode only, meaning it only senses current sourced from a power supply to a system load as shown in 図 7-2.

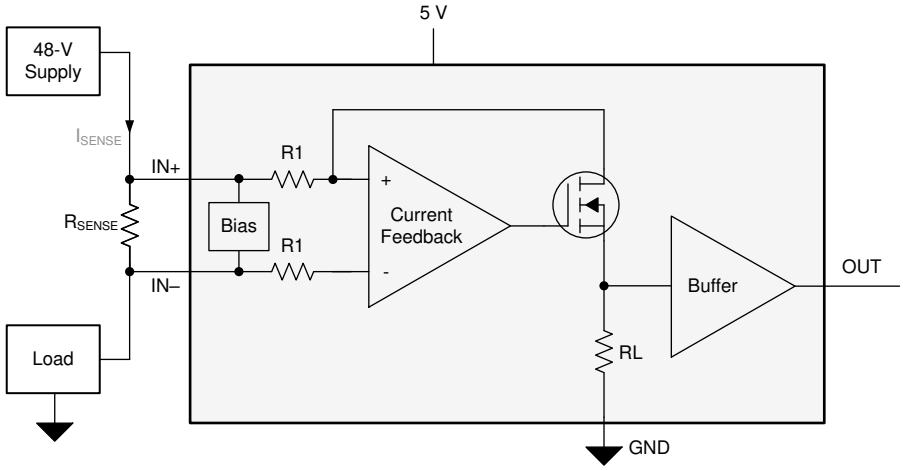

図 7-2. Unidirectional Application

The linear range of the output stage is limited to how close the output voltage can approach ground under zero-input conditions. The zero current output voltage of the INA293-Q1 is very small, with a maximum of GND + 20 mV. Make sure to apply a differential input voltage of (20 mV / Gain) or greater to keep the INA293-Q1 output in the linear region of operation.

7.4.2 High Signal Throughput

With a bandwidth of 1.3 MHz at a gain of 20 V/V and a slew rate of 2.5 V/µs, the INA293-Q1 is specifically designed for detecting and protecting applications from fast inrush currents. As shown in 表 7-2, the INA293-Q1 responds in less than 2 µs for a system measuring a 75-A threshold on a 2-mΩ shunt.

表 7-2. Response Time

PARAMETER		EQUATION	INA293-Q1 AT V_S = 5 V
G	Gain		20 V/V
I_{MAX}	Maximum current		100 A
$I_{Threshold}$	Threshold current		75 A
R_{SENSE}	Current sense resistor value		2 mΩ
V_{OUT_MAX}	Output voltage at maximum current	$V_{OUT_MAX} = I_{MAX} \times R_{SENSE} \times G$	4 V
V_{OUT_THR}	Output voltage at threshold current	$V_{OUT_THR} = I_{THR} \times R_{SENSE} \times G$	3 V
SR	Slew rate		2.5 V/µs
	Output response time	$T_{response} = V_{OUT_THR} / SR$	< 2 µs

Copyright © 2022 Texas Instruments Incorporated

8 Application and Implementation

注

以下のアプリケーション情報は、TI の製品仕様に含まれるものではなく、TI ではその正確性または完全性を保証いたしません。個々の目的に対する製品の適合性については、お客様の責任で判断していただくことになります。お客様は自身の設計実装を検証しテストすることで、システムの機能を確認する必要があります。

8.1 Application Information

The INA293-Q1 amplifies the voltage developed across a current-sensing resistor as current flows through the resistor to the load. The wide input common-mode voltage range and high common-mode rejection of the INA293-Q1 make it usable over a wide range of voltage rails while still maintaining an accurate current measurement.

8.1.1 R_{SENSE} and Device Gain Selection

The accuracy of any current-sense amplifier is maximized by choosing the current-sense resistor to be as large as possible. A large sense resistor maximizes the differential input signal for a given amount of current flow and reduces the error contribution of the offset voltage. However, there are practical limits as to how large the current-sense resistor can be in a given application because of the resistor size and maximum allowable power dissipation. 式 1 gives the maximum value for the current-sense resistor for a given power dissipation budget:

$$R_{SENSE} < \frac{PD_{MAX}}{I_{MAX}^2} \quad (1)$$

where:

- PD_{MAX} is the maximum allowable power dissipation in R_{SENSE}.
- I_{MAX} is the maximum current that will flow through R_{SENSE}.

An additional limitation on the size of the current-sense resistor and device gain is due to the power-supply voltage, V_S, and device swing-to-rail limitations. To make sure that the current-sense signal is properly passed to the output, both positive and negative output swing limitations must be examined. 式 2 provides the maximum values of R_{SENSE} and GAIN to keep the device from exceeding the positive swing limitation.

$$I_{MAX} \times R_{SENSE} \times GAIN < V_{SP} \quad (2)$$

where:

- I_{MAX} is the maximum current that will flow through R_{SENSE}.
- GAIN is the gain of the current-sense amplifier.
- V_{SP} is the positive output swing as specified in the data sheet.

To avoid positive output swing limitations when selecting the value of R_{SENSE}, there is always a trade-off between the value of the sense resistor and the gain of the device under consideration. If the sense resistor selected for the maximum power dissipation is too large, then it is possible to select a lower-gain device in order to avoid positive swing limitations.

The negative swing limitation places a limit on how small the sense resistor value can be for a given application. 式 3 provides the limit on the minimum value of the sense resistor.

$$I_{MIN} \times R_{SENSE} \times GAIN > V_{SN} \quad (3)$$

where:

- I_{MIN} is the minimum current that will flow through R_{SENSE}.
- GAIN is the gain of the current-sense amplifier.

Copyright © 2022 Texas Instruments Incorporated

- V_{SN} is the negative output swing of the device.

表 8-1 shows an example of the different results obtained from using five different gain versions of the INA293-Q1. From the table data, the highest gain device allows a smaller current-shunt resistor and decreased power dissipation in the element.

表 8-1. R_{SENSE} Selection and Power Dissipation(1)

PARAMETER		EQUATION	RESULTS AT V_S = 5 V				
			A1, B1 DEVICES	A2, B2 DEVICES	A3, B3 DEVICES	A4, B4 DEVICES	A5, B5 DEVICES
G	Gain		20 V/V	50 V/V	100 V/V	200 V/V	500 V/V
V_{DIFF}	Ideal differential input voltage	$V_{DIFF} = V_{OUT} / G$	250 mV	100 mV	50 mV	25 mV	10 mV
R_{SENSE}	Current sense resistor value	$R_{SENSE} = V_{DIFF} / I_{MAX}$	25 mΩ	10 mΩ	5 mΩ	2.5 mΩ	1 mΩ
P_{SENSE}	Current-sense resistor power dissipation	$R_{SENSE} \times I_{MAX}2$	2.5 W	1 W	0.5W	0.25 W	0.1 W

(1) Design example with 10-A full-scale current with maximum output voltage set to 5 V.

8.1.2 Input Filtering

注

Input filters are not required for accurate measurements using the INA293-Q1, and use of filters in this location is not recommended. If filter components are used on the input of the amplifier, follow the guidelines in this section to minimize the effects on performance.

Based strictly on user design requirements, external filtering of the current signal may be desired. The initial location that can be considered for the filter is at the output of the current sense amplifier. Although placing the filter at the output satisfies the filtering requirements, this location changes the low output impedance measured by any circuitry connected to the output voltage pin. The other location for filter placement is at the current sense amplifier input pins. This location satisfies the filtering requirement also, however the components must be carefully selected to minimally impact device performance. 図 8-1 shows a filter placed at the input pins.

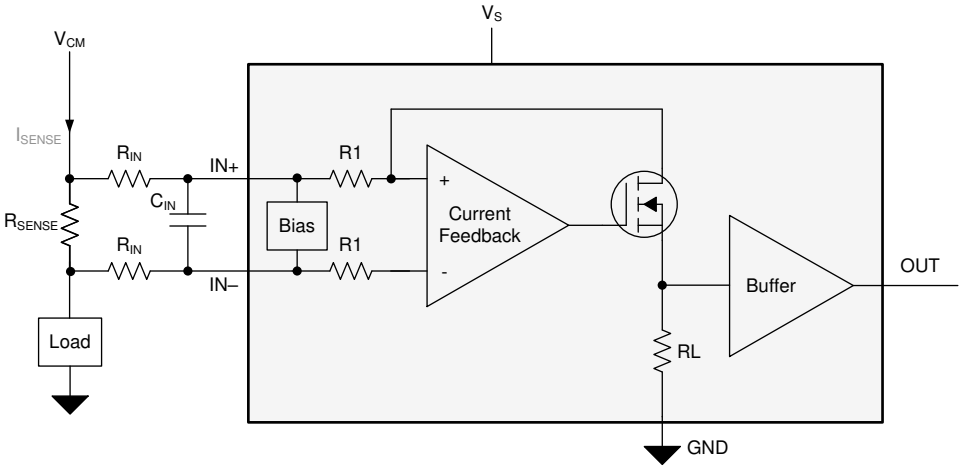

図 8-1. Filter at Input Pins

External series resistance provides a source of additional measurement error, so keep the value of these series resistors to 10 Ω or less to reduce loss of accuracy. The internal bias network shown in 図 8-1 creates a mismatch in input bias currents (see 図 6-15, 図 6-16 and 図 6-17) when a differential voltage is applied between the input pins. If additional external series filter resistors are added to the circuit, a mismatch is created in the voltage drop across the filter resistors. This voltage is a differential error voltage in the shunt resistor voltage. In addition to the absolute resistor value, mismatch resulting from resistor tolerance can significantly impact the error because this value is calculated based on the actual measured resistance.

Copyright © 2022 Texas Instruments Incorporated

The measurement error expected from the additional external filter resistors can be calculated using 式 4, where the gain error factor is calculated using 式 5.

$$\text{Gain Error (\%)} = 100 - (100 \times \text{Gain Error Factor}) \tag{4}$$

The gain error factor, shown in 式 4, can be calculated to determine the gain error introduced by the additional external series resistance. 式 4 calculates the deviation of the shunt voltage, resulting from the attenuation and imbalance created by the added external filter resistance. 表 8-2 provides the gain error factor and gain error for several resistor values.

$$\text{Gain Error Factor} = \frac{R_B \times R1}{(R_B \times R1) + (R_B \times R_{IN}) + (2 \times R_{IN} \times R1)} \tag{5}$$

Where:

- R_{IN} is the external filter resistance value.
- R1 is the INA293-Q1 input resistance value specified in 表 7-1.
- R_B in the internal bias resistance, which is 6600 Ω ± 20%.

表 8-2. Example Gain Error Factor and Gain Error for 10-Ω External Filter Input Resistors

DEVICE (GAIN)	GAIN ERROR FACTOR	GAIN ERROR (%)
INA293-Q1x1 (20)	0.997108386	-0.289161432
INA293-Q1x2 (50)	0.996512207	-0.348779273
INA293-Q1x3 (100)	0.996512207	-0.348779273
INA293-Q1x4 (200)	0.995520159	-0.447984072
INA293-Q1x5 (500)	0.992555831	-0.744416873

8.2 Typical Application

The INA293-Q1 is a unidirectional, current-sense amplifier capable of measuring currents through a resistive shunt with shunt common-mode voltages from –4 V to +110 V.

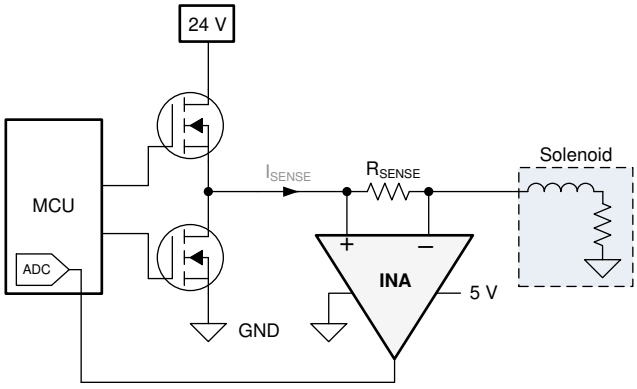

図 8-2. Current Sensing in a Solenoid Application

8.2.1 Design Requirements

In this example application, the common-mode voltage ranges from 0 V to 24 V. The maximum sense current is 1.5 A, and a 5-V supply is available for the INA293-Q1. Following the design guidelines from the *R_{SENSE} and Device Gain Selection* section, a R_{SENSE} of 50 mΩ and a gain of 50 V/V are selected to provide good output dynamic range. 表 8-3 lists the design setup for this application.

Copyright © 2022 Texas Instruments Incorporated

表 8-3. Design Parameters

DESIGN PARAMETERS	EXAMPLE VALUE
Power supply voltage	5 V
Common-mode voltage range	0 V to 24 V
Maximum sense current	1.5 A
R_{SENSE} resistor	50 mΩ
Gain option	50 V/V

8.2.2 Detailed Design Procedure

The INA293-Q1 is designed to measure current in a typical solenoid application. The INA293-Q1 measures current across the 50-mΩ shunt that is placed at the output of the half-bridge. The INA293-Q1 measures the differential voltage across the shunt resistor, and the signal is internally amplified with a gain of 50 V/V. The output of the INA293-Q1 is connected to the analog-to-digital converter (ADC) of an MCU to digitize the current measurements.

Solenoid loads are highly inductive and are often prone to failure. Solenoids are often used for position control, precise fluid control, and fluid regulation. Measuring real-time current on the solenoid continuously can indicate premature failure of the solenoid which can lead to a faulty control loop in the system. Measuring high-side current also indicates if there are any ground faults on the solenoid or the FETs that can be damaged in an application. The INA293-Q1, with high bandwidth and slew rate, can be used to detect fast overcurrent conditions to prevent the solenoid damage from short-to-ground faults.

8.2.2.1 Overload Recovery With Negative V_{SENSE}

The INA293-Q1 is a unidirectional current sense amplifier that is meant to operate with a positive differential input voltage (V_{SENSE}). If negative V_{SENSE} is applied, the device is placed in an overload condition and requires time to recover once V_{SENSE} returns positive. The required overload recovery time increases with more negative V_{SENSE}.

8.2.3 Application Curve

図 8-3 shows the output response of a solenoid.

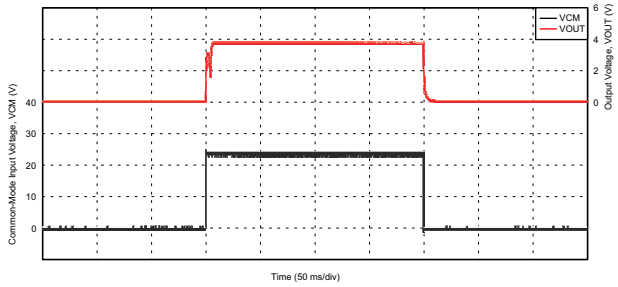

図 8-3. Solenoid Control Current Response

8.3 Power Supply Recommendations

The INA293-Q1 power supply can be 5 V, whereas the input common-mode voltage can vary between –4 V to 110 V. The output voltage range of the OUT pin, however, is limited by the voltage on the power-supply pin.

8.4 Layout

8.4.1 Layout Guidelines

Attention to good layout practices is always recommended.

- Connect the input pins to the sensing resistor using a Kelvin or 4-wire connection. This connection technique makes sure that only the current-sensing resistor impedance is detected between the input pins. Poor routing of the current-sensing resistor commonly results in additional resistance present between the input pins.

Copyright © 2022 Texas Instruments Incorporated

Given the very low ohmic value of the current resistor, any additional high-current carrying impedance can cause significant measurement errors.

- Place the power-supply bypass capacitor as close as possible to the device power supply and ground pins. The recommended value of this bypass capacitor is 0.1 µF. Additional decoupling capacitance can be added to compensate for noisy or high-impedance power supplies.

8.4.2 Layout Example

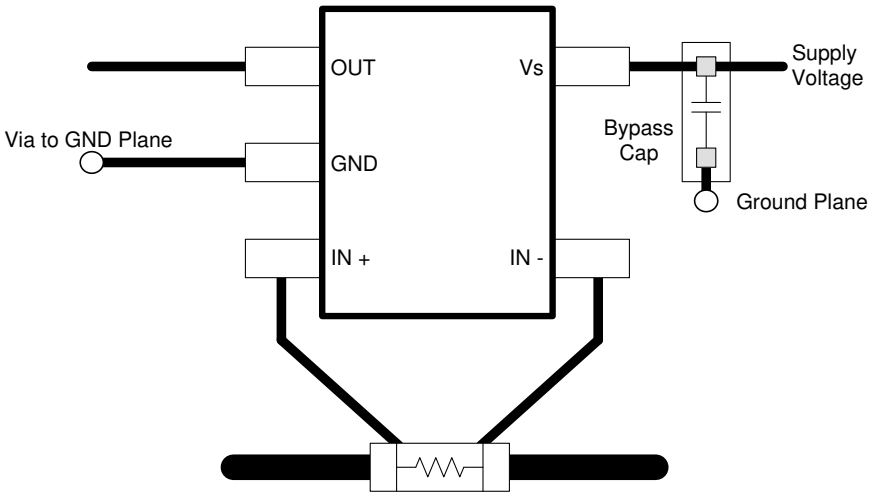

図 8-4. INA293A-Q1 Recommended Layout

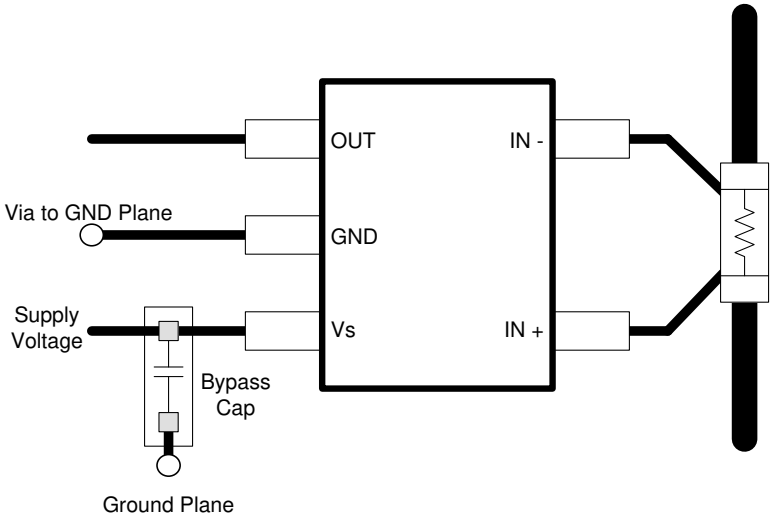

図 8-5. INA293B-Q1 Recommended Layout

Copyright © 2022 Texas Instruments Incorporated

9 Device and Documentation Support

9.1 Documentation Support

9.1.1 Related Documentation

For related documentation see the following: Texas Instruments, *INA293EVM* user's guide.

9.2 Receiving Notification of Documentation Updates

To receive notification of documentation updates, navigate to the device product folder on ti.com. Click on *Subscribe to updates* to register and receive a weekly digest of any product information that has changed. For change details, review the revision history included in any revised document.

9.3 サポート・リソース

TI E2E™ サポート・フォーラムは、エンジニアが検証済みの回答と設計に関するヒントをエキスパートから迅速かつ直接得ることができる場所です。既存の回答を検索したり、独自の質問をしたりすることで、設計で必要な支援を迅速に得ることができます。

リンクされているコンテンツは、該当する貢献者により、現状のまま提供されるものです。これらは TI の仕様を構成するものではなく、必ずしも TI の見解を反映したものではありません。TI の使用条件を参照してください。

9.4 Trademarks

TI E2E™ is a trademark of Texas Instruments.
すべての商標は、それぞれの所有者に帰属します。

9.5 Electrostatic Discharge Caution



This integrated circuit can be damaged by ESD. Texas Instruments recommends that all integrated circuits be handled with appropriate precautions. Failure to observe proper handling and installation procedures can cause damage.

ESD damage can range from subtle performance degradation to complete device failure. Precision integrated circuits may be more susceptible to damage because very small parametric changes could cause the device not to meet its published specifications.

9.6 Glossary

TI Glossary	This glossary lists and explains terms, acronyms, and definitions.

10 Mechanical, Packaging, and Orderable Information

The following pages include mechanical, packaging, and orderable information. This information is the most current data available for the designated devices. This data is subject to change without notice and revision of this document. For browser-based versions of this data sheet, refer to the left-hand navigation.

Copyright © 2022 Texas Instruments Incorporated

PACKAGING INFORMATION

Orderable part number	Status (1)	Material type (2)	Package | Pins	Package qty | Carrier	RoHS (3)	Lead finish/ Ball material (4)	MSL rating/ Peak reflow (5)	Op temp (°C)	Part marking (6)
INA293A1QDBVRQ1	Active	Production	SOT-23 (DBV) | 5	3000 | LARGE T&R	Yes	NIPDAU	Level-1-260C-UNLIM	-40 to 125	1UZC
INA293A1QDBVRQ1.B	Active	Production	SOT-23 (DBV) | 5	3000 | LARGE T&R	Yes	NIPDAU	Level-1-260C-UNLIM	-40 to 125	1UZC
INA293A2QDBVRQ1	Active	Production	SOT-23 (DBV) | 5	3000 | LARGE T&R	Yes	NIPDAU	Level-1-260C-UNLIM	-40 to 125	1V1C
INA293A2QDBVRQ1.B	Active	Production	SOT-23 (DBV) | 5	3000 | LARGE T&R	Yes	NIPDAU	Level-1-260C-UNLIM	-40 to 125	1V1C
INA293A3QDBVRQ1	Active	Production	SOT-23 (DBV) | 5	3000 | LARGE T&R	Yes	NIPDAU	Level-1-260C-UNLIM	-40 to 125	1V2C
INA293A3QDBVRQ1.B	Active	Production	SOT-23 (DBV) | 5	3000 | LARGE T&R	Yes	NIPDAU	Level-1-260C-UNLIM	-40 to 125	1V2C
INA293A4QDBVRQ1	Active	Production	SOT-23 (DBV) | 5	3000 | LARGE T&R	Yes	NIPDAU	Level-1-260C-UNLIM	-40 to 125	1V3C
INA293A4QDBVRQ1.B	Active	Production	SOT-23 (DBV) | 5	3000 | LARGE T&R	Yes	NIPDAU	Level-1-260C-UNLIM	-40 to 125	1V3C
INA293A5QDBVRQ1	Active	Production	SOT-23 (DBV) | 5	3000 | LARGE T&R	Yes	NIPDAU	Level-1-260C-UNLIM	-40 to 125	1V4C
INA293A5QDBVRQ1.B	Active	Production	SOT-23 (DBV) | 5	3000 | LARGE T&R	Yes	NIPDAU	Level-1-260C-UNLIM	-40 to 125	1V4C
INA293B1QDBVRQ1	Active	Production	SOT-23 (DBV) | 5	3000 | LARGE T&R	Yes	NIPDAU	Level-1-260C-UNLIM	-40 to 125	1V5C
INA293B1QDBVRQ1.B	Active	Production	SOT-23 (DBV) | 5	3000 | LARGE T&R	Yes	NIPDAU	Level-1-260C-UNLIM	-40 to 125	1V5C
INA293B2QDBVRQ1	Active	Production	SOT-23 (DBV) | 5	3000 | LARGE T&R	Yes	NIPDAU	Level-1-260C-UNLIM	-40 to 125	1V6C
INA293B2QDBVRQ1.B	Active	Production	SOT-23 (DBV) | 5	3000 | LARGE T&R	Yes	NIPDAU	Level-1-260C-UNLIM	-40 to 125	1V6C
INA293B3QDBVRQ1	Active	Production	SOT-23 (DBV) | 5	3000 | LARGE T&R	Yes	NIPDAU	Level-1-260C-UNLIM	-40 to 125	1V7C
INA293B3QDBVRQ1.B	Active	Production	SOT-23 (DBV) | 5	3000 | LARGE T&R	Yes	NIPDAU	Level-1-260C-UNLIM	-40 to 125	1V7C
INA293B4QDBVRQ1	Active	Production	SOT-23 (DBV) | 5	3000 | LARGE T&R	Yes	NIPDAU	Level-1-260C-UNLIM	-40 to 125	1V8C
INA293B4QDBVRQ1.B	Active	Production	SOT-23 (DBV) | 5	3000 | LARGE T&R	Yes	NIPDAU	Level-1-260C-UNLIM	-40 to 125	1V8C
INA293B5QDBVRQ1	Active	Production	SOT-23 (DBV) | 5	3000 | LARGE T&R	Yes	NIPDAU	Level-1-260C-UNLIM	-40 to 125	1V9C
INA293B5QDBVRQ1.B	Active	Production	SOT-23 (DBV) | 5	3000 | LARGE T&R	Yes	NIPDAU	Level-1-260C-UNLIM	-40 to 125	1V9C

(1) **Status:** For more details on status, see our product life cycle.

(2) **Material type:** When designated, preproduction parts are prototypes/experimental devices, and are not yet approved or released for full production. Testing and final process, including without limitation quality assurance, reliability performance testing, and/or process qualification, may not yet be complete, and this item is subject to further changes or possible discontinuation. If available for ordering, purchases will be subject to an additional waiver at checkout, and are intended for early internal evaluation purposes only. These items are sold without warranties of any kind.

(3) **RoHS values:** Yes, No, RoHS Exempt. See the TI RoHS Statement for additional information and value definition.

(4) **Lead finish/Ball material:** Parts may have multiple material finish options. Finish options are separated by a vertical ruled line. Lead finish/Ball material values may wrap to two lines if the finish value exceeds the maximum column width.

(5) **MSL rating/Peak reflow:** The moisture sensitivity level ratings and peak solder (reflow) temperatures. In the event that a part has multiple moisture sensitivity ratings, only the lowest level per JEDEC standards is shown. Refer to the shipping label for the actual reflow temperature that will be used to mount the part to the printed circuit board.

(6) **Part marking:** There may be an additional marking, which relates to the logo, the lot trace code information, or the environmental category of the part.

Multiple part markings will be inside parentheses. Only one part marking contained in parentheses and separated by a "~" will appear on a part. If a line is indented then it is a continuation of the previous line and the two combined represent the entire part marking for that device.

Important Information and Disclaimer: The information provided on this page represents TI's knowledge and belief as of the date that it is provided. TI bases its knowledge and belief on information provided by third parties, and makes no representation or warranty as to the accuracy of such information. Efforts are underway to better integrate information from third parties. TI has taken and continues to take reasonable steps to provide representative and accurate information but may not have conducted destructive testing or chemical analysis on incoming materials and chemicals. TI and TI suppliers consider certain information to be proprietary, and thus CAS numbers and other limited information may not be available for release.

In no event shall TI's liability arising out of such information exceed the total purchase price of the TI part(s) at issue in this document sold by TI to Customer on an annual basis.

OTHER QUALIFIED VERSIONS OF INA293-Q1 :

- Catalog : INA293

NOTE: Qualified Version Definitions:

- Catalog - TI's standard catalog product

TAPE AND REEL INFORMATION

REEL DIMENSIONS

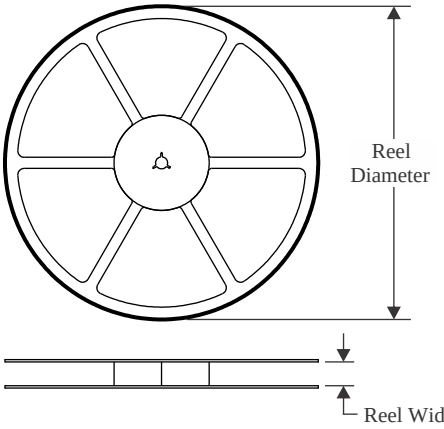

TAPE DIMENSIONS

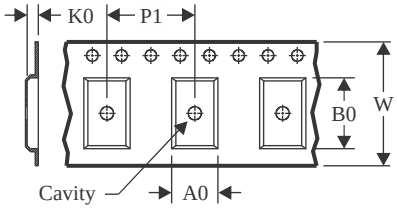

A0	Dimension designed to accommodate the component width
B0	Dimension designed to accommodate the component length
K0	Dimension designed to accommodate the component thickness
W	Overall width of the carrier tape
P1	Pitch between successive cavity centers

QUADRANT ASSIGNMENTS FOR PIN 1 ORIENTATION IN TAPE

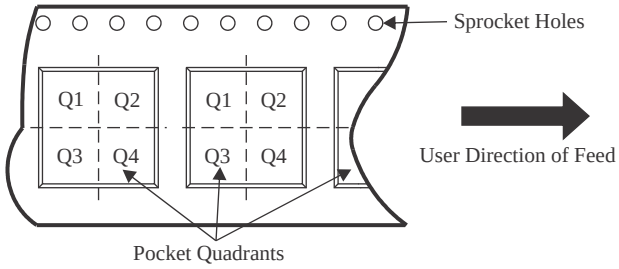

*All dimensions are nominal

Device	Package Type	Package Drawing	Pins	SPQ	Reel Diameter (mm)	Reel Width W1 (mm)	A0 (mm)	B0 (mm)	K0 (mm)	P1 (mm)	W (mm)	Pin1 Quadrant
INA293A1QDBVRQ1	SOT-23	DBV	5	3000	180.0	8.4	3.2	3.2	1.4	4.0	8.0	Q3
INA293A1QDBVRQ1	SOT-23	DBV	5	3000	180.0	8.4	3.23	3.17	1.37	4.0	8.0	Q3
INA293A2QDBVRQ1	SOT-23	DBV	5	3000	180.0	8.4	3.23	3.17	1.37	4.0	8.0	Q3
INA293A2QDBVRQ1	SOT-23	DBV	5	3000	180.0	8.4	3.2	3.2	1.4	4.0	8.0	Q3
INA293A3QDBVRQ1	SOT-23	DBV	5	3000	180.0	8.4	3.2	3.2	1.4	4.0	8.0	Q3
INA293A3QDBVRQ1	SOT-23	DBV	5	3000	180.0	8.4	3.23	3.17	1.37	4.0	8.0	Q3
INA293A4QDBVRQ1	SOT-23	DBV	5	3000	180.0	8.4	3.23	3.17	1.37	4.0	8.0	Q3
INA293A4QDBVRQ1	SOT-23	DBV	5	3000	180.0	8.4	3.2	3.2	1.4	4.0	8.0	Q3
INA293A5QDBVRQ1	SOT-23	DBV	5	3000	180.0	8.4	3.2	3.2	1.4	4.0	8.0	Q3
INA293A5QDBVRQ1	SOT-23	DBV	5	3000	180.0	8.4	3.23	3.17	1.37	4.0	8.0	Q3
INA293B1QDBVRQ1	SOT-23	DBV	5	3000	180.0	8.4	3.2	3.2	1.4	4.0	8.0	Q3
INA293B1QDBVRQ1	SOT-23	DBV	5	3000	180.0	8.4	3.23	3.17	1.37	4.0	8.0	Q3
INA293B2QDBVRQ1	SOT-23	DBV	5	3000	180.0	8.4	3.2	3.2	1.4	4.0	8.0	Q3
INA293B2QDBVRQ1	SOT-23	DBV	5	3000	180.0	8.4	3.23	3.17	1.37	4.0	8.0	Q3
INA293B3QDBVRQ1	SOT-23	DBV	5	3000	180.0	8.4	3.23	3.17	1.37	4.0	8.0	Q3
INA293B3QDBVRQ1	SOT-23	DBV	5	3000	180.0	8.4	3.2	3.2	1.4	4.0	8.0	Q3

Device	Package Type	Package Drawing	Pins	SPQ	Reel Diameter (mm)	Reel Width W1 (mm)	A0 (mm)	B0 (mm)	K0 (mm)	P1 (mm)	W (mm)	Pin1 Quadrant
INA293B4QDBVRQ1	SOT-23	DBV	5	3000	180.0	8.4	3.23	3.17	1.37	4.0	8.0	Q3
INA293B4QDBVRQ1	SOT-23	DBV	5	3000	180.0	8.4	3.2	3.2	1.4	4.0	8.0	Q3
INA293B5QDBVRQ1	SOT-23	DBV	5	3000	180.0	8.4	3.2	3.2	1.4	4.0	8.0	Q3
INA293B5QDBVRQ1	SOT-23	DBV	5	3000	180.0	8.4	3.23	3.17	1.37	4.0	8.0	Q3

TAPE AND REEL BOX DIMENSIONS

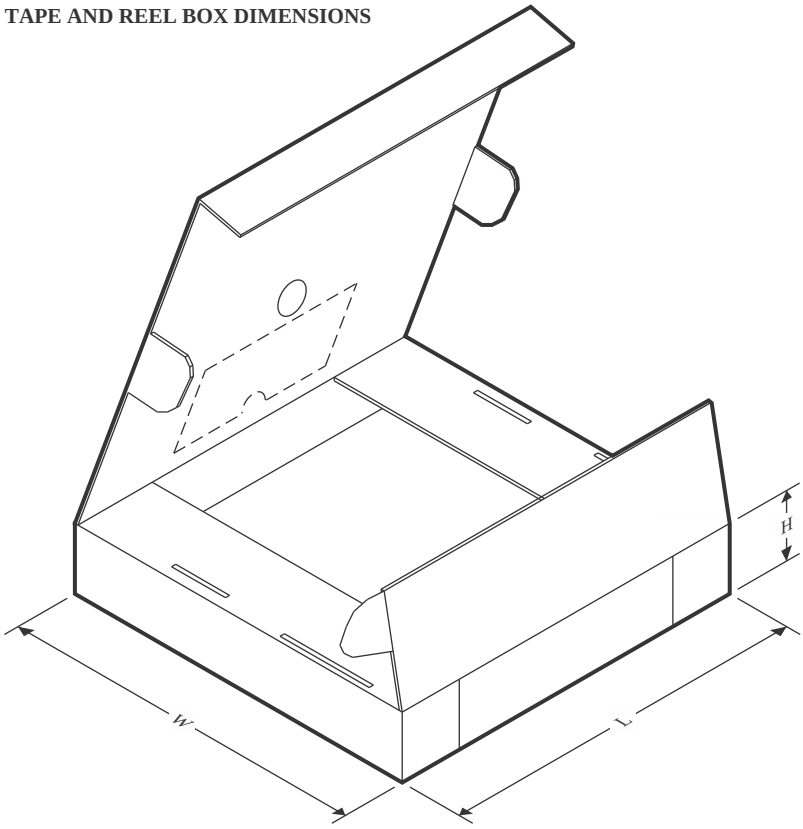

*All dimensions are nominal

Device	Package Type	Package Drawing	Pins	SPQ	Length (mm)	Width (mm)	Height (mm)
INA293A1QDBVRQ1	SOT-23	DBV	5	3000	210.0	185.0	35.0
INA293A1QDBVRQ1	SOT-23	DBV	5	3000	183.0	183.0	20.0
INA293A2QDBVRQ1	SOT-23	DBV	5	3000	183.0	183.0	20.0
INA293A2QDBVRQ1	SOT-23	DBV	5	3000	210.0	185.0	35.0
INA293A3QDBVRQ1	SOT-23	DBV	5	3000	210.0	185.0	35.0
INA293A3QDBVRQ1	SOT-23	DBV	5	3000	183.0	183.0	20.0
INA293A4QDBVRQ1	SOT-23	DBV	5	3000	183.0	183.0	20.0
INA293A4QDBVRQ1	SOT-23	DBV	5	3000	210.0	185.0	35.0
INA293A5QDBVRQ1	SOT-23	DBV	5	3000	210.0	185.0	35.0
INA293A5QDBVRQ1	SOT-23	DBV	5	3000	183.0	183.0	20.0
INA293B1QDBVRQ1	SOT-23	DBV	5	3000	210.0	185.0	35.0
INA293B1QDBVRQ1	SOT-23	DBV	5	3000	183.0	183.0	20.0
INA293B2QDBVRQ1	SOT-23	DBV	5	3000	210.0	185.0	35.0
INA293B2QDBVRQ1	SOT-23	DBV	5	3000	183.0	183.0	20.0
INA293B3QDBVRQ1	SOT-23	DBV	5	3000	183.0	183.0	20.0
INA293B3QDBVRQ1	SOT-23	DBV	5	3000	210.0	185.0	35.0
INA293B4QDBVRQ1	SOT-23	DBV	5	3000	183.0	183.0	20.0
INA293B4QDBVRQ1	SOT-23	DBV	5	3000	210.0	185.0	35.0

Device	Package Type	Package Drawing	Pins	SPQ	Length (mm)	Width (mm)	Height (mm)
INA293B5QDBVRQ1	SOT-23	DBV	5	3000	210.0	185.0	35.0
INA293B5QDBVRQ1	SOT-23	DBV	5	3000	183.0	183.0	20.0

PACKAGE OUTLINE

DBV0005A

SOT-23 - 1.45 mm max height

SMALL OUTLINE TRANSISTOR

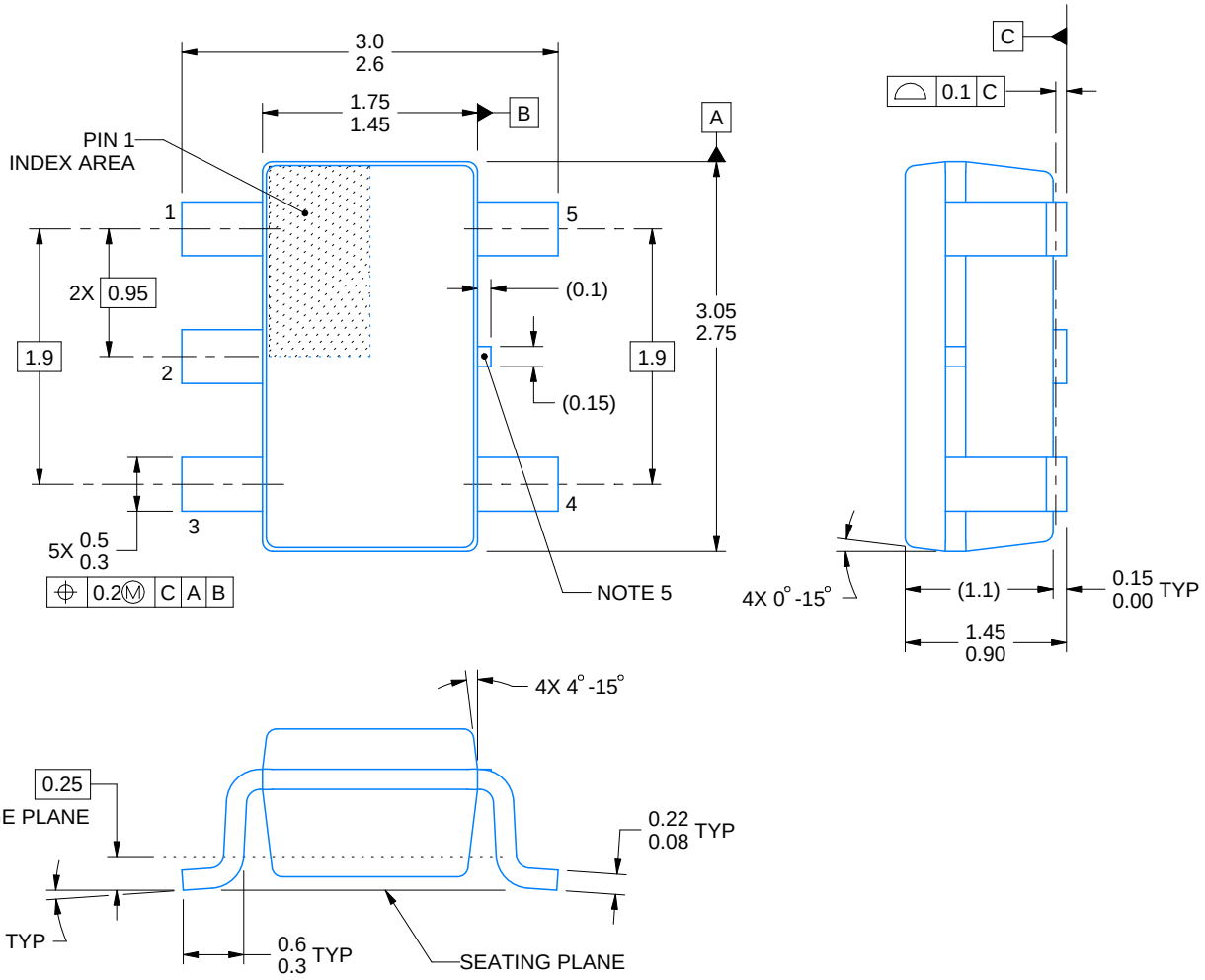

4214839/K 08/2024

NOTES:

1. All linear dimensions are in millimeters. Any dimensions in parenthesis are for reference only. Dimensioning and tolerancing per ASME Y14.5M.
2. This drawing is subject to change without notice.
3. Refernce JEDEC MO-178.
4. Body dimensions do not include mold flash, protrusions, or gate burrs. Mold flash, protrusions, or gate burrs shall not exceed 0.25 mm per side.
5. Support pin may differ or may not be present.

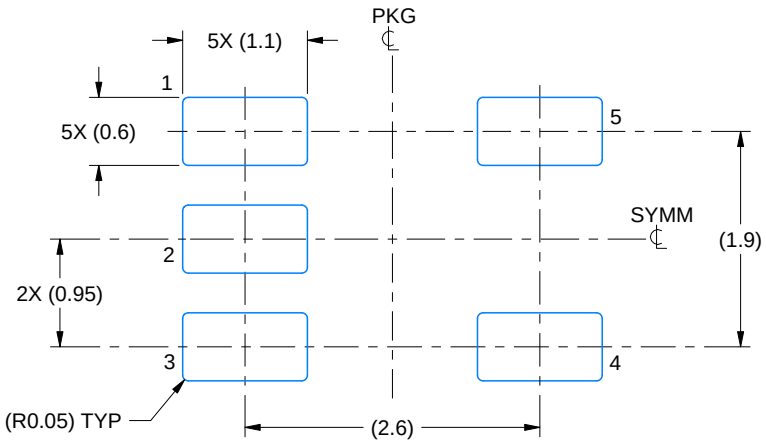

LAND PATTERN EXAMPLE
EXPOSED METAL SHOWN
SCALE:15X

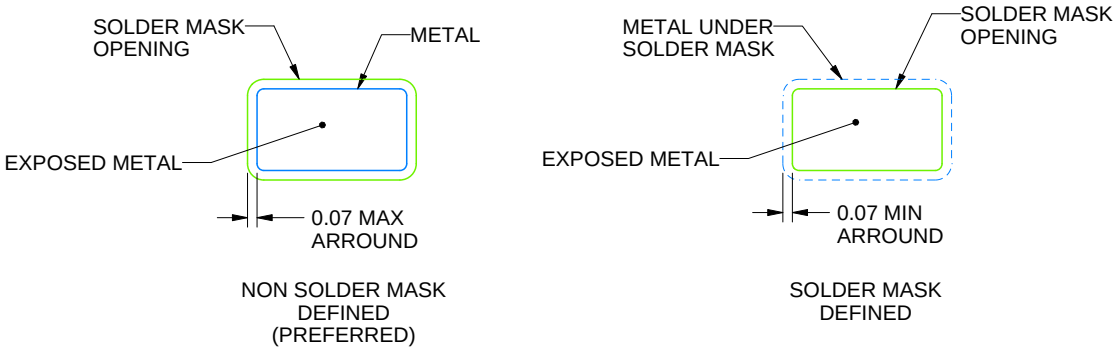

SOLDER MASK DETAILS

4214839/K 08/2024

NOTES: (continued)

6. Publication IPC-7351 may have alternate designs.
7. Solder mask tolerances between and around signal pads can vary based on board fabrication site.

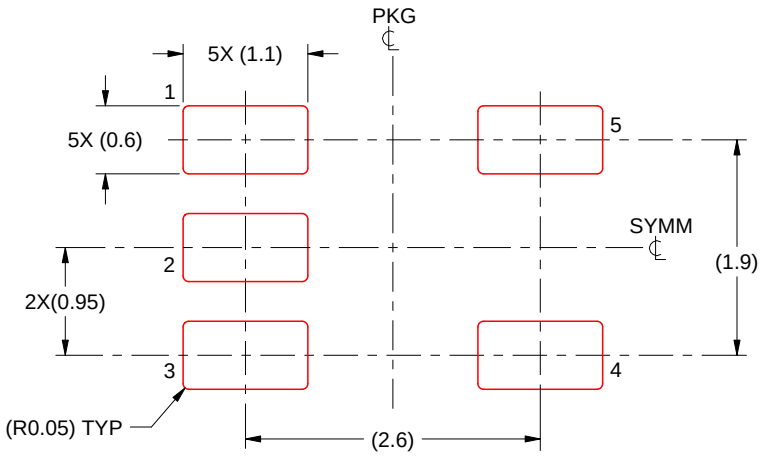

SOLDER PASTE EXAMPLE
BASED ON 0.125 mm THICK STENCIL
SCALE:15X

4214839/K 08/2024

NOTES: (continued)

8. Laser cutting apertures with trapezoidal walls and rounded corners may offer better paste release. IPC-7525 may have alternate design recommendations.
9. Board assembly site may have different recommendations for stencil design.

重要なお知らせと免責事項

TI は、技術データと信頼性データ (データシートを含みます)、設計リソース (リファレンス デザインを含みます)、アプリケーションや設計に関する各種アドバイス、Web ツール、安全性情報、その他のリソースを、欠陥が存在する可能性のある「現状のまま」提供しており、商品性および特定目的に対する適合性の黙示保証、第三者の知的財産権の非侵害保証を含むいかなる保証も、明示的または黙示的にかかわらず拒否します。

これらのリソースは、TI 製品を使用する設計の経験を積んだ開発者への提供を意図したものです。(1) お客様のアプリケーションに適した TI 製品の選定、(2) お客様のアプリケーションの設計、検証、試験、(3) お客様のアプリケーションに該当する各種規格や、その他のあらゆる安全性、セキュリティ、規制、または他の要件への確実な適合に関する責任を、お客様のみが単独で負うものとします。

上記の各種リソースは、予告なく変更される可能性があります。これらのリソースは、リソースで説明されている TI 製品を使用するアプリケーションの開発の目的でのみ、TI はその使用をお客様に許諾します。これらのリソースに関して、他の目的で複製することや掲載することは禁止されています。TI や第三者の知的財産権のライセンスが付与されている訳ではありません。お客様は、これらのリソースを自身で使用した結果発生するあらゆる申し立て、損害、費用、損失、責任について、TI およびその代理人を完全に補償するものとし、TI は一切の責任を拒否します。

TI の製品は、 TI の販売条件 、 TI の総合的な品質ガイドライン 、 ti.com または TI 製品などに関連して提供される他の適用条件に従い提供されます。TI がこれらのリソースを提供することは、適用される TI の保証または他の保証の放棄の拡大や変更を意味するものではありません。 TI がカスタム、またはカスタマー仕様として明示的に指定していない限り、TI の製品は標準的なカタログに掲載される汎用機器です。

お客様がいかなる追加条項または代替条項を提案する場合も、TI はそれらに異議を唱え、拒否します。

Copyright © 2026, Texas Instruments Incorporated

最終更新日：2025 年 10 月