# LM2597、LM2597HV SIMPLE SWITCHER®電力コンバータ、150kHz 0.5A降圧型電圧レギュレータ(追加機能付き)

## 1 特長

- 3.3V、5V、12V、および可変出力バージョン
- 可変出力電圧バージョンは1.2Vから最大37V（HVバージョンは57V）の出力電圧範囲で、入力と負荷の全条件で±4%の許容誤差
- 0.5Aの出力電流を保証
- 8ピン表面実装パッケージおよび8ピンPDIPパッケージで供給
- 最大60Vの入力電圧範囲
- 150kHz固定周波数の内部オシレータ
- $\overline{\text{シャットダウン}}$/ソフトスタート
- レギュレーション範囲外エラー・フラグ
- エラー出力遅延
- 内部回路用のバイアス電源ピン($V_{BS}$)により高い入力電圧で効率を向上
- 低消費電力のスタンバイ・モード、$I_Q$の標準値85μA
- 高効率
- 容易に入手可能な標準インダクタ使用
- サーマル・シャットダウンおよび電流制限保護

## 2 アプリケーション

- シンプルな高効率降圧型(バック)レギュレータ
- リニア・レギュレータ用の高効率プリレギュレータ
- オンボード・スイッチング・レギュレータ
- 反転型コンバータ

## 3 概要

LM2597xxシリーズのレギュレータは、降圧型(バック)スイッチング・レギュレータのすべてのアクティブ機能を内蔵したモノリシックICで、優れたラインおよび負荷レギュレーションで 0.5Aの負荷を駆動できます。3.3V、5V、12Vの固定出力電圧と、可変出力電圧のバージョンがあり、8ピンPDIPと8ピン表面実装パッケージで供給されます。

このシリーズのスイッチング・レギュレータは、LM2594シリーズと類似ですが、監視機能やパフォーマンス用の機能が追加されています。

必要な外付け部品が少なくてすみ、使い方が簡単で、内部的な周波数補償、ラインおよび負荷の仕様の強化、固定周波数のオシレータ、$\overline{\text{シャットダウン}}$/ソフトスタート、エラー・フラグ遅延、およびエラー・フラグ出力の機能を備えています。

LM2597xxシリーズは150kHzのスイッチング周波数で動作するため、低周波数で動作するスイッチング・レギュレータに比べて、サイズの小さなフィルタ部品を使用できます。効率が高いため、通常はプリント基板の銅配線のみが必要なヒートシンクになります。

**製品情報(1)**

| 型番 | パッケージ | 本体サイズ(公称) |
|---|---|---|
| LM2597、LM2597HV | SOIC (8) | 4.90mm×3.91mm |
| | PDIP (8) | 9.81mm×6.35mm |

(1) 提供されているすべてのパッケージについては、巻末の注文情報を参照してください。

**代表的なアプリケーション**

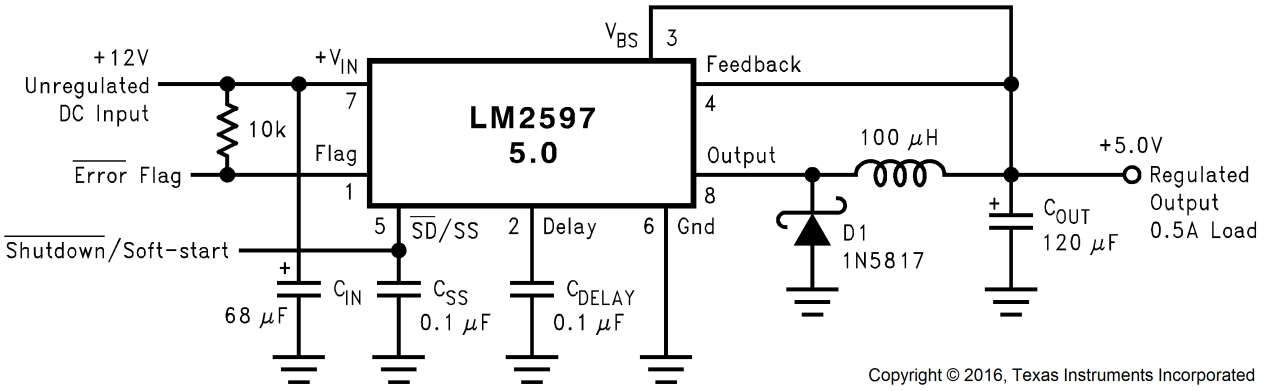


Copyright © 2016, Texas Instruments Incorporated

固定出力電圧バージョン

英語版のTI製品についての情報を翻訳したこの資料は、製品の概要を確認する目的で便宜的に提供しているものです。該当する正式な英語版の最新情報は、www.ti.comで閲覧でき、その内容が常に優先されます。TIでは翻訳の正確性および妥当性につきましては一切保証いたしません。実際の設計などの前には、必ず最新版の英語版をご参照くださいますようお願いいたします。

# 目次


**1** 特長 ... 1
**2** アプリケーション ... 1
**3** 概要 ... 1
**4** 改訂履歴 ... 2
**5** 概要（続き） ... 3
**6** **Pin Configuration and Functions** ... 3
**7** **Specifications** ... 4
7.1 Absolute Maximum Ratings ... 4
7.2 ESD Ratings ... 4
7.3 Recommended Operating Conditions ... 4
7.4 Thermal Information ... 4
7.5 Electrical Characteristics – 3.3 V ... 5
7.6 Electrical Characteristics – 5 V ... 5
7.7 Electrical Characteristics – 12 V ... 5
7.8 Electrical Characteristics – Adjustable ... 5
7.9 Electrical Characteristics – All Output Voltage Versions ... 6
7.10 Typical Characteristics ... 8
**8** **Detailed Description** ... 11
8.1 Overview ... 11
8.2 Functional Block Diagram ... 11
8.3 Feature Description ... 11
8.4 Device Functional Modes ... 16
**9** **Application and Implementation** ... 17
9.1 Application Information ... 17
9.2 Typical Applications ... 28
**10** **Power Supply Recommendations** ... 35
**11** **Layout** ... 35
11.1 Layout Guidelines ... 35
11.2 Layout Example ... 36
11.3 Thermal Considerations ... 37
**12** デバイスおよびドキュメントのサポート ... 39
12.1 関連リンク ... 39
12.2 コミュニティ・リソース ... 39
12.3 商標 ... 39
12.4 静電気放電に関する注意事項 ... 39
12.5 Glossary ... 39
**13** メカニカル、パッケージ、および注文情報 ... 39


## 4 改訂履歴

資料番号末尾の英字は改訂を表しています。その改訂履歴は英語版に準じています。

**Revision C (April 2013)** から **Revision D** に変更 **Page**

- 「*ESD定格*」の表、「*機能説明*」セクション、「*デバイスの機能モード*」セクション、「*アプリケーションと実装*」セクション、「*電源に関する推奨事項*」セクション、「*レイアウト*」セクション、「*デバイスおよびドキュメントのサポート*」セクション、「*メカニカル、パッケージ、および注文情報*」セクションを追加 ... 1
- デザイン・ソフトウェア*Switchers Made Simple*への言及をすべて削除 ... 1

**Revision B (April 2013)** から **Revision C** に変更 **Page**

- Changed layout of National Semiconductor Data Sheet to TI format ... 37


Copyright © 1998–2016, Texas Instruments Incorporated

## 5 概要（続き）

LM2597xxシリーズでの使用に最適な標準インダクタ(スルーホールと表面実装タイプのいずれも)をいくつかのメーカーから入手できます。このため、スイッチング電源の設計が大幅に簡素化されます。

また、入力電圧と出力負荷のあらゆる条件において、出力電圧について±4%、オシレータ周波数について±15%の許容誤差が保証されています。外部シャットダウン機能を内蔵しており、スタンバイ電流は標準値で85μAです。自己保護機能として、出力スイッチのための2段階電流制限回路と、異常時でも完全に保護動作が保証される過熱シャットダウン機能を備えています。

LM2597HVは、必要な入力電圧が60Vまでのアプリケーションに対応しています。

## 6 Pin Configuration and Functions

**D or P Package**
**8-Pin SOIC or PDIP**
**Top View**

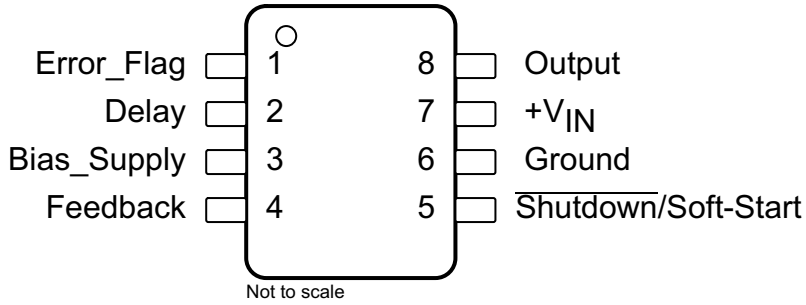


Not to scale

**Pin Functions**(1)

| PIN | | I/O | DESCRIPTION |
|---|---|---|---|
| NO. | NAME | | |
| 1 | Error Flag | O | Open collector output that provides a low signal (flag transistor ON) when the regulated output voltage drops more than 5% from the nominal output voltage. On start up, Error Flag is low until $V_{OUT}$ reaches 95% of the nominal output voltage and a delay time determined by the Delay pin capacitor. This signal can be used as a reset to a microprocessor on power up. |
| 2 | Delay | O | At power-up, this pin can be used to provide a time delay between the time the regulated output voltage reaches 95% of the nominal output voltage, and the time the error flag output goes high. |
| 3 | Bias Supply | I | This feature allows the regulators internal circuitry to be powered from the regulated output voltage or an external supply, instead of the input voltage. This results in increased efficiency under some operating conditions, such as low output current or high input voltage. |
| 4 | Feedback | I | Senses the regulated output voltage to complete the feedback loop. |
| 5 | $\overline{\text{Shutdown}}$/Soft-Start | I | This dual function pin provides the following features: (a) Allows the switching regulator circuit to be shut down using logic level signals thus dropping the total input supply current to approximately 80 μA. (b) Adding a capacitor to this pin provides a soft-start feature which minimizes start-up current and provides a controlled ramp up of the output voltage. |
| 6 | Ground | — | Circuit ground |
| 7 | $+V_{IN}$ | I | This is the positive input supply for the IC switching regulator. A suitable input bypass capacitor must be present at this pin to minimize voltage transients and to supply the switching currents required by the regulator. |
| 8 | Output | O | Internal switch. The voltage at this pin switches between ($+V_{IN} - V_{SAT}$) and approximately −0.5 V, with a duty cycle of $V_{OUT}/V_{IN}$. To minimize coupling to sensitive circuitry, the PCB copper area connected to this pin must be kept to a minimum. |

(1) If any of the above four features ($\overline{\text{Shutdown}}$/Soft-start, Error Flag, Delay, or Bias Supply) are not used, the respective pins must be left open.

Copyright © 1998–2016, Texas Instruments Incorporated

# 7 Specifications

## 7.1 Absolute Maximum Ratings (1)(2)

| | | | MIN | MAX | UNIT |
|---|---|---|---|---|---|
| Maximum supply voltage, $V_{IN}$ (3) | | LM2597 | | 45 | V |
| | | LM2597HV | | 60 | V |
| $\overline{SD}$/SS pin input voltage (4) | | | | 6 | V |
| Delay pin voltage (4) | | | | 1.5 | V |
| Flag pin voltage | | | –0.3 | 45 | V |
| Bias supply voltage, $V_{BS}$ | | | –0.3 | 30 | V |
| Feedback pin voltage | | | –0.3 | 25 | V |
| Output voltage to ground (steady-state) | | | –1 | 1 | V |
| Power dissipation | | | Internally limited | | |
| Lead temperature | D package | Vapor phase (60 sec) | | 215 | °C |
| | | Infrared (15 sec) | | 220 | |
| | P package (soldering, 10 sec) | | | 260 | |
| Maximum junction temperature | | | | 150 | °C |
| Storage temperature, $T_{stg}$ | | | –65 | 150 | °C |

(1) Stresses beyond those listed under *Absolute Maximum Ratings* may cause permanent damage to the device. These are stress ratings only, which do not imply functional operation of the device at these or any other conditions beyond those indicated under *Recommended Operating Conditions*. Exposure to absolute-maximum-rated conditions for extended periods may affect device reliability.
(2) If Military/Aerospace specified devices are required, please contact the Texas Instruments Sales Office/ Distributors for availability and specifications.
(3) $V_{IN}$ = 40V for the LM2597 and 60V for the LM2597HV.
(4) Voltage internally clamped. If clamp voltage is exceeded, limit current to a maximum of 1 mA.

## 7.2 ESD Ratings

| | | | VALUE | UNIT |
|---|---|---|---|---|
| $V_{(ESD)}$ | Electrostatic discharge | Human-body model (HBM), per ANSI/ESDA/JEDEC JS-001 (1)(2) | ±2000 | V |

(1) JEDEC document JEP155 states that 500-V HBM allows safe manufacturing with a standard ESD control process.
(2) The human body model is a 100 pF capacitor discharged through a 1.5k resistor into each pin.

## 7.3 Recommended Operating Conditions

| | | MIN | MAX | UNIT |
|---|---|---|---|---|
| Supply voltage | LM2597 | 4.5 | 40 | V |
| | LM2597HV | 4.5 | 60 | V |
| Temperature | | –40 | 125 | °C |

## 7.4 Thermal Information

| THERMAL METRIC (1) | | LM2597, LM2597HV | | UNIT |
|---|---|---|---|---|
| | | D (SOIC) | P (PDIP) | |
| | | 8 PINS | 8 PINS | |
| $R_{\theta JA}$ | Junction-to-ambient thermal resistance (2) | 95 | 150 | °C/W |

(1) For more information about traditional and new thermal metrics, see the *Semiconductor and IC Package Thermal Metrics* application report, SPRA953.
(2) Junction-to-ambient thermal resistance with approximately 1 square inch of printed circuit board copper surrounding the leads. Additional copper area will lower thermal resistance further.


Copyright © 1998–2016, Texas Instruments Incorporated

## 7.5 Electrical Characteristics – 3.3 V

Specifications are for $T_J$ = 25°C, $V_{INmax}$ = 40 V for the LM2597, and 60 V for the LM2597HV (unless otherwise noted).

| PARAMETER | | TEST CONDITIONS | | MIN(1) | TYP(2) | MAX(1) | UNIT |
|---|---|---|---|---|---|---|---|
| **SYSTEM PARAMETERS**(3)(4) (See Figure 46 for test circuit) | | | | | | | |
| $V_{OUT}$ | Output voltage | 4.75 V ≤ $V_{IN}$ ≤ $V_{INmax}$, 0.1 A ≤ $I_{LOAD}$ ≤ 0.5 A | $T_J$ = 25°C | 3.168 | 3.3 | 3.432 | V |
| | | | Over full operating temperature range | 3.135 | | 3.465 | |
| η | Efficiency | $V_{IN}$ = 12 V, $I_{LOAD}$ = 0.5 A | | | 80% | | |

(1) All room temperature limits are 100% production tested. All limits at temperature extremes are specified via correlation using standard Statistical Quality Control (SQC) methods. All limits are used to calculate Average Outgoing Quality Level (AOQL).
(2) Typical numbers are at 25°C and represent the most likely norm.
(3) External components such as the catch diode, inductor, input and output capacitors can affect switching regulator system performance. When the LM2597xx is used as shown in the Figure 46 test circuit, system performance is shown in the test conditions column.
(4) No diode, inductor or capacitor connected to output pin.

## 7.6 Electrical Characteristics – 5 V

Specifications are for $T_J$ = 25°C, $V_{INmax}$ = 40 V for the LM2597, and 60 V for the LM2597HV (unless otherwise noted).

| PARAMETER | | TEST CONDITIONS | | MIN(1) | TYP(2) | MAX(1) | UNIT |
|---|---|---|---|---|---|---|---|
| **SYSTEM PARAMETERS**(3)(4) (See Figure 46 for test circuit) | | | | | | | |
| $V_{OUT}$ | Output voltage | 7 V ≤ $V_{IN}$ ≤ $V_{INmax}$, 0.1 A ≤ $I_{LOAD}$ ≤ 0.5 A | $T_J$ = 25°C | 4.8 | 5 | 5.2 | V |
| | | | Over full operating temperature range | 4.75 | | 5.25 | |
| η | Efficiency | $V_{IN}$ = 12 V, $I_{LOAD}$ = 0.5 A | | | 82% | | |

(1) All room temperature limits are 100% production tested. All limits at temperature extremes are specified via correlation using standard Statistical Quality Control (SQC) methods. All limits are used to calculate Average Outgoing Quality Level (AOQL).
(2) Typical numbers are at 25°C and represent the most likely norm.
(3) External components such as the catch diode, inductor, input and output capacitors can affect switching regulator system performance. When the LM2597xx is used as shown in the Figure 46 test circuit, system performance is shown in the test conditions column.
(4) No diode, inductor or capacitor connected to output pin.

## 7.7 Electrical Characteristics – 12 V

Specifications are for $T_J$ = 25°C, $V_{INmax}$ = 40 V for the LM2597, and 60 V for the LM2597HV (unless otherwise noted).

| PARAMETER | | TEST CONDITIONS | | MIN(1) | TYP(2) | MAX(1) | UNIT |
|---|---|---|---|---|---|---|---|
| **SYSTEM PARAMETERS**(3)(4) (See Figure 46 for test circuit) | | | | | | | |
| $V_{OUT}$ | Output voltage | 15 V ≤ $V_{IN}$ ≤ $V_{INmax}$, 0.1 A ≤ $I_{LOAD}$ ≤ 0.5 A | $T_J$ = 25°C | 11.52 | 12 | 12.48 | V |
| | | | Over full operating temperature range | 11.4 | | 12.6 | |
| η | Efficiency | $V_{IN}$ = 25 V, $I_{LOAD}$ = 0.5 A | | | 88% | | |

(1) All room temperature limits are 100% production tested. All limits at temperature extremes are specified via correlation using standard Statistical Quality Control (SQC) methods. All limits are used to calculate Average Outgoing Quality Level (AOQL).
(2) Typical numbers are at 25°C and represent the most likely norm.
(3) External components such as the catch diode, inductor, input and output capacitors can affect switching regulator system performance. When the LM2597xx is used as shown in the Figure 46 test circuit, system performance is shown in the test conditions column.
(4) No diode, inductor or capacitor connected to output pin.

## 7.8 Electrical Characteristics – Adjustable

Specifications are for $T_J$ = 25°C, $V_{INmax}$ = 40 V for the LM2597, and 60 V for the LM2597HV (unless otherwise noted).

| PARAMETER | | TEST CONDITIONS | | MIN(1) | TYP(2) | MAX(1) | UNIT |
|---|---|---|---|---|---|---|---|
| **SYSTEM PARAMETERS**(3)(4) (See Figure 46 for test circuit) | | | | | | | |
| $V_{FB}$ | Feedback voltage | 4.5 V ≤ $V_{IN}$ ≤ $V_{INmax}$, 0.1 A ≤ $I_{LOAD}$ ≤ 0.5 A | | | 1.230 | | V |
| | | $V_{OUT}$ programmed for 3 V, circuit of Figure 46 | $T_J$ = 25°C | 1.193 | | 1.267 | |
| | | | Over full operating temperature range | 1.18 | | 1.280 | |
| η | Efficiency | $V_{IN}$ = 12 V, $V_{OUT}$ = 3 V, $I_{LOAD}$ = 0.5 A | | | 80% | | |

(1) All room temperature limits are 100% production tested. All limits at temperature extremes are specified via correlation using standard Statistical Quality Control (SQC) methods. All limits are used to calculate Average Outgoing Quality Level (AOQL).
(2) Typical numbers are at 25°C and represent the most likely norm.
(3) External components such as the catch diode, inductor, input and output capacitors can affect switching regulator system performance. When the LM2597xx is used as shown in the Figure 46 test circuit, system performance is shown in the test conditions column.
(4) No diode, inductor or capacitor connected to output pin.

Copyright © 1998–2016, Texas Instruments Incorporated

## 7.9 Electrical Characteristics – All Output Voltage Versions

Specifications are for $T_J$ = 25°C, $I_{LOAD}$ = 100 mA, $V_{IN}$ = 12 V for the 3.3-V, 5-V, and Adjustable version, and $V_{IN}$ = 24 V for the 12-V version (unless otherwise noted).

| PARAMETER | | TEST CONDITIONS | | MIN(1) | TYP(2) | MAX(1) | UNIT |
|---|---|---|---|---|---|---|---|
| **DEVICE PARAMETERS** | | | | | | | |
| $I_b$ | Feedback bias current | Adjustable version only, $V_{FB}$ = 1.235 V | $T_J$ = 25°C | | 10 | 50 | nA |
| | | | Over full operating temperature range | | | 100 | |
| $f_O$ | Oscillator frequency(3) | $T_J$ = 25°C | | 127 | 150 | 173 | kHz |
| | | Over full operating temperature range | | 110 | | 173 | |
| $V_{SAT}$ | Saturation voltage | $I_{OUT}$ = 0.5 A(4)(5) | $T_J$ = 25°C | | 0.9 | 1.1 | V |
| | | | Over full operating temperature range | | | 1.2 | |
| DC | Max duty cycle (ON)(5) | | | | 100% | | |
| | Min duty cycle (OFF)(6) | | | | 0% | | |
| $I_{CL}$ | Current limit | Peak current(4)(5) | $T_J$ = 25°C | 0.65 | 0.8 | 1.3 | A |
| | | | Over full operating temperature range | 0.58 | | 1.4 | |
| $I_L$ | Output leakage current | Output = 0 V(4)(6)(7) | | | | 50 | µA |
| | | Output = −1 V | | | 2 | 15 | mA |
| $I_Q$ | Operating quiescent current | $\overline{SD}$/SS pin open, $V_{BS}$ pin open(6) | | | 5 | 10 | mA |
| $I_{STBY}$ | Standby quiescent current | LM2597, $\overline{SD}$/SS pin = 0 V(6) | $T_J$ = 25°C | | 85 | 200 | µA |
| | | | Over full operating temperature range | | | 250 | |
| | | LM2597HV | $T_J$ = 25°C | | 140 | 250 | µA |
| | | | Over full operating temperature range | | | 300 | |
| **$\overline{SHUTDOWN}$/SOFT-START CONTROL** (see Figure 46 for test circuit) | | | | | | | |
| $V_{SD}$ | Shutdown threshold voltage | | | | 1.3 | | V |
| | | Low, shutdown mode, over full operating temperature range | | | | 0.6 | |
| | | High, soft-start mode | | 2 | | | |
| $V_{SS}$ | Soft-start voltage | $V_{OUT}$ = 20% of nominal output voltage | | | 2 | | V |
| | | $V_{OUT}$ = 100% of nominal output voltage | | | 3 | | |
| $I_{SD}$ | Shutdown current | $V_{\overline{SHUTDOWN}}$ = 0.5 V | | | 5 | 10 | µA |
| $I_{SS}$ | Soft-start current | $V_{Soft\text{-}start}$ = 2.5 V | | | 1.6 | 5 | µA |

(1) All room temperature limits are 100% production tested. All limits at temperature extremes are specified via correlation using standard Statistical Quality Control (SQC) methods. All limits are used to calculate Average Outgoing Quality Level (AOQL).
(2) Typical numbers are at 25°C and represent the most likely norm.
(3) The switching frequency is reduced when the second stage current limit is activated. The amount of reduction is determined by the severity of current overload.
(4) No diode, inductor or capacitor connected to output pin.
(5) Feedback pin removed from output and connected to 0 V to force the output transistor switch ON.
(6) Feedback pin removed from output and connected to 12 V for the 3.3-V, 5-V, and the adjustable version, and 15 V for the 12-V version, to force the output transistor switch OFF.
(7) $V_{IN}$ = 40 V for the LM2597 and 60 V for the LM2597HV.


Copyright © 1998–2016, Texas Instruments Incorporated

## Electrical Characteristics – All Output Voltage Versions (continued)

Specifications are for $T_J$ = 25°C, $I_{LOAD}$ = 100 mA, $V_{IN}$ = 12 V for the 3.3-V, 5-V, and Adjustable version, and $V_{IN}$ = 24 V for the 12-V version (unless otherwise noted).

| PARAMETER | | TEST CONDITIONS | | MIN(1) | TYP(2) | MAX(1) | UNIT |
|---|---|---|---|---|---|---|---|
| **FLAG/DELAY CONTROL** (see Figure 46 for test circuit) | | | | | | | |
| | Regulator dropout detector threshold voltage | Low (Flag ON) | | 92% | 96% | 98% | |
| $VF_{SAT}$ | Flag output saturation voltage | $I_{SINK}$ = 3 mA | | | 0.3 | | V |
| | | $V_{DELAY}$ = 0.5 V | $T_J$ = 25°C | | | 0.7 | V |
| | | | Over full operating temperature range | | | 1 | |
| $IF_L$ | Flag output leakage current | $V_{FLAG}$ = 40 V | | | 0.3 | | µA |
| | Delay pin threshold voltage | | | | 1.25 | | V |
| | | Low (flag ON) | | 1.21 | | | V |
| | | High (flag OFF) and $V_{OUT}$ regulated | | | | 1.29 | V |
| | Delay pin source current | $V_{DELAY}$ = 0.5 V | | | 3 | 6 | µA |
| | Delay pin saturation | Low (Flag ON) | $T_J$ = 25°C | | 55 | 350 | mV |
| | | | Over full operating temperature range | | | 400 | |
| **BIAS SUPPLY** | | | | | | | |
| $I_{BS}$ | Bias supply pin current | $V_{BS}$ = 2 V(6) | | | 120 | 400 | µA |
| | | $V_{BS}$ = 4.4 V(6) | | | 4 | 10 | mA |
| $I_Q$ | Operating quiescent current | $V_{BS}$ = 4.4 V , $V_{in}$ pin current(6) | | | 1 | 2 | mA |

Copyright © 1998–2016, Texas Instruments Incorporated

## 7.10 Typical Characteristics

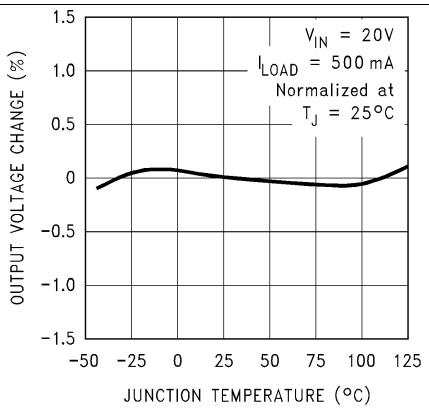


**Figure 1. Normalized Output Voltage**

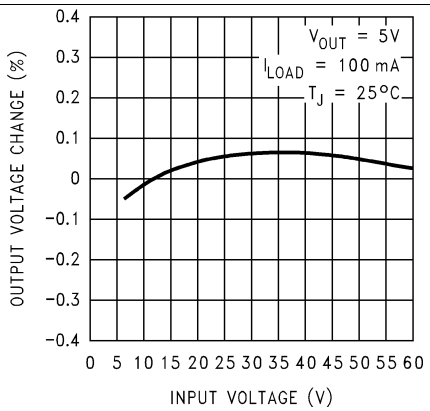


**Figure 2. Line Regulation**

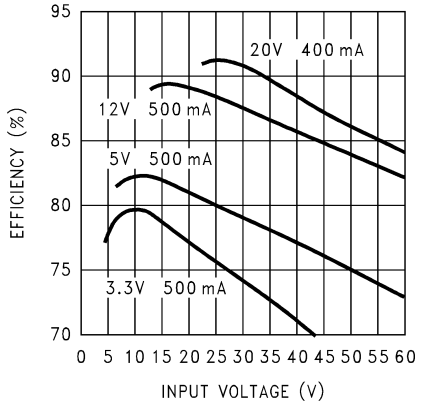


**Figure 3. Efficiency**

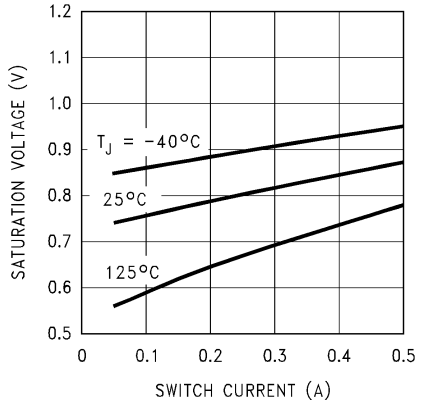


**Figure 4. Switch Saturation Voltage**

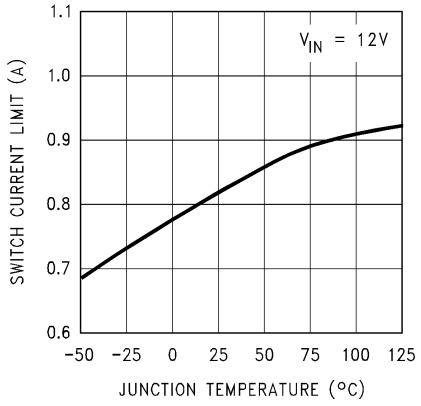


**Figure 5. Switch Current Limit**

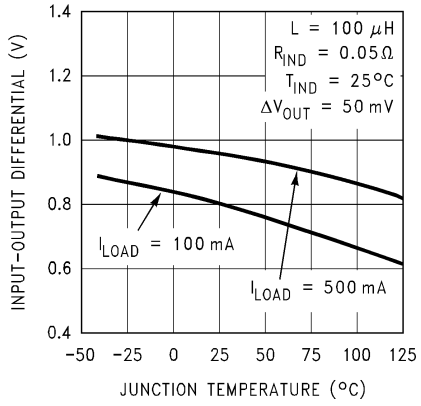


**Figure 6. Dropout Voltage**


Copyright © 1998–2016, Texas Instruments Incorporated

## Typical Characteristics (continued)

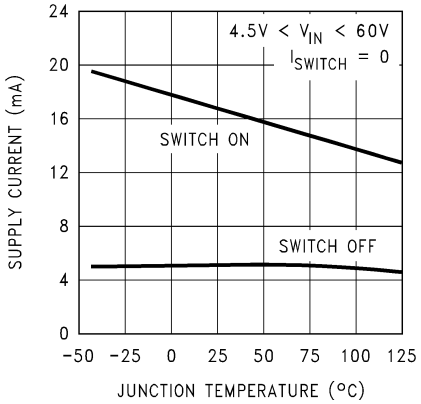


**Figure 7. Quiescent Current**

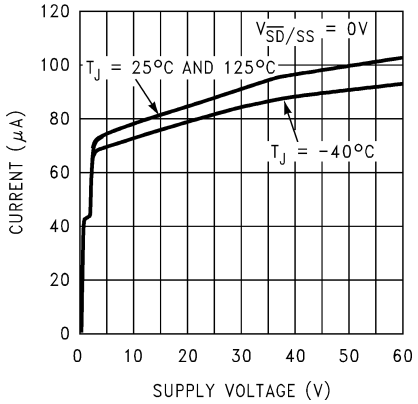


**Figure 8. Standby Quiescent Current**

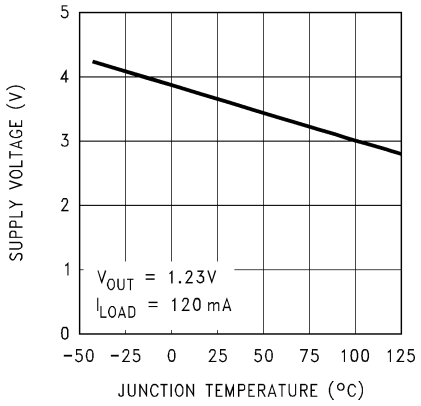


**Figure 9. Minimum Operating Supply Voltage**

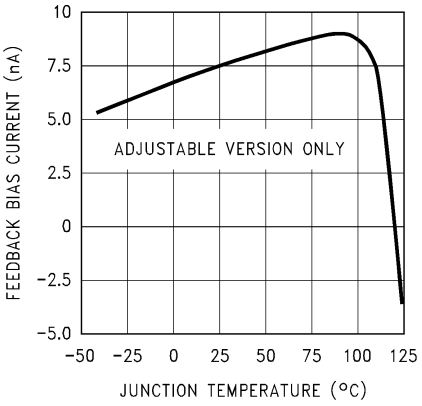


**Figure 10. Feedback Pin Bias Current**

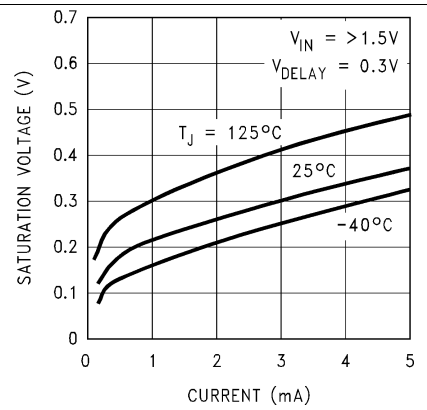


**Figure 11. Flag Saturation Voltage**

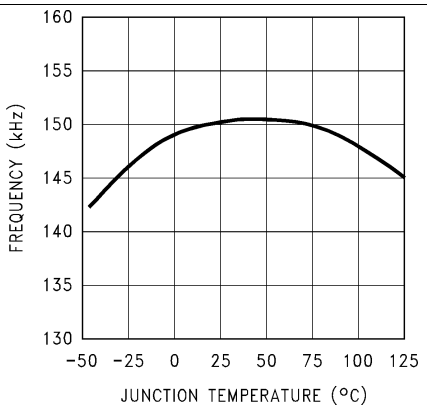


**Figure 12. Switching Frequency**

Copyright © 1998–2016, Texas Instruments Incorporated

## Typical Characteristics (continued)

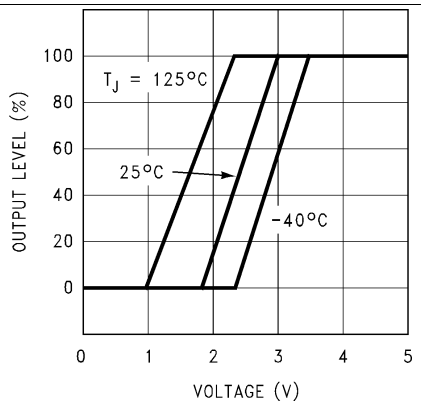


**Figure 13. Soft-Start**

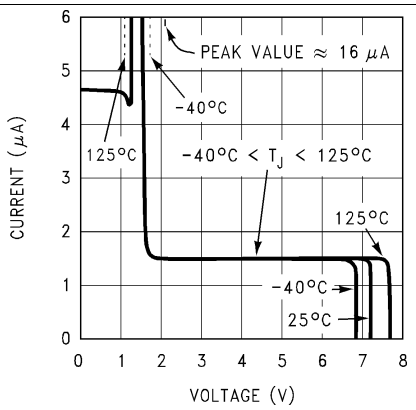


**Figure 14. $\overline{\text{Shutdown}}$/Soft-Start Current**

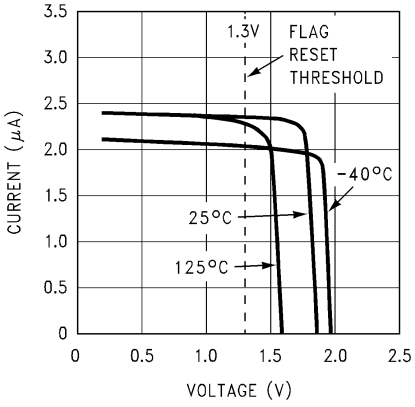


**Figure 15. Delay Pin Current**

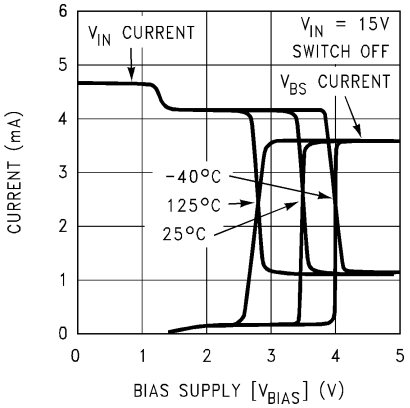


**Figure 16. $V_{IN}$ and $V_{BS}$ Current vs $V_{BS}$ and Temperature**

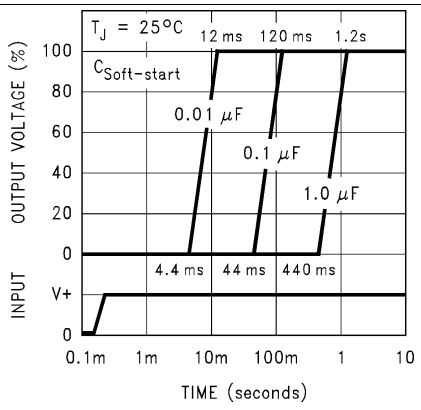


**Figure 17. Soft-Start Response**

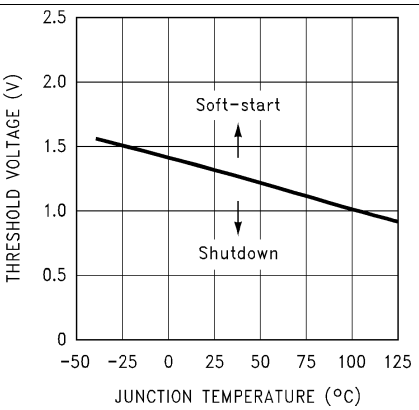


**Figure 18. $\overline{\text{Shutdown}}$/Soft-Start Threshold Voltage**


Copyright © 1998–2016, Texas Instruments Incorporated

# 8 Detailed Description

## 8.1 Overview

The LM2597 SIMPLE SWITCHER® regulator is an easy-to-use, nonsynchronous step-down DC-DC converter with a wide input voltage range from 45 V to up to 60 V for the HV version. The regulatorm is capable of delivering up to 0.5-A DC load current with excellent line and load regulation. These devices are available in fixed output voltages of 3.3-V, 5-V, 12-V, and an adjustable output version. The family requires few external components, and the pin arrangement was designed for simple, optimum PCB layout.

## 8.2 Functional Block Diagram

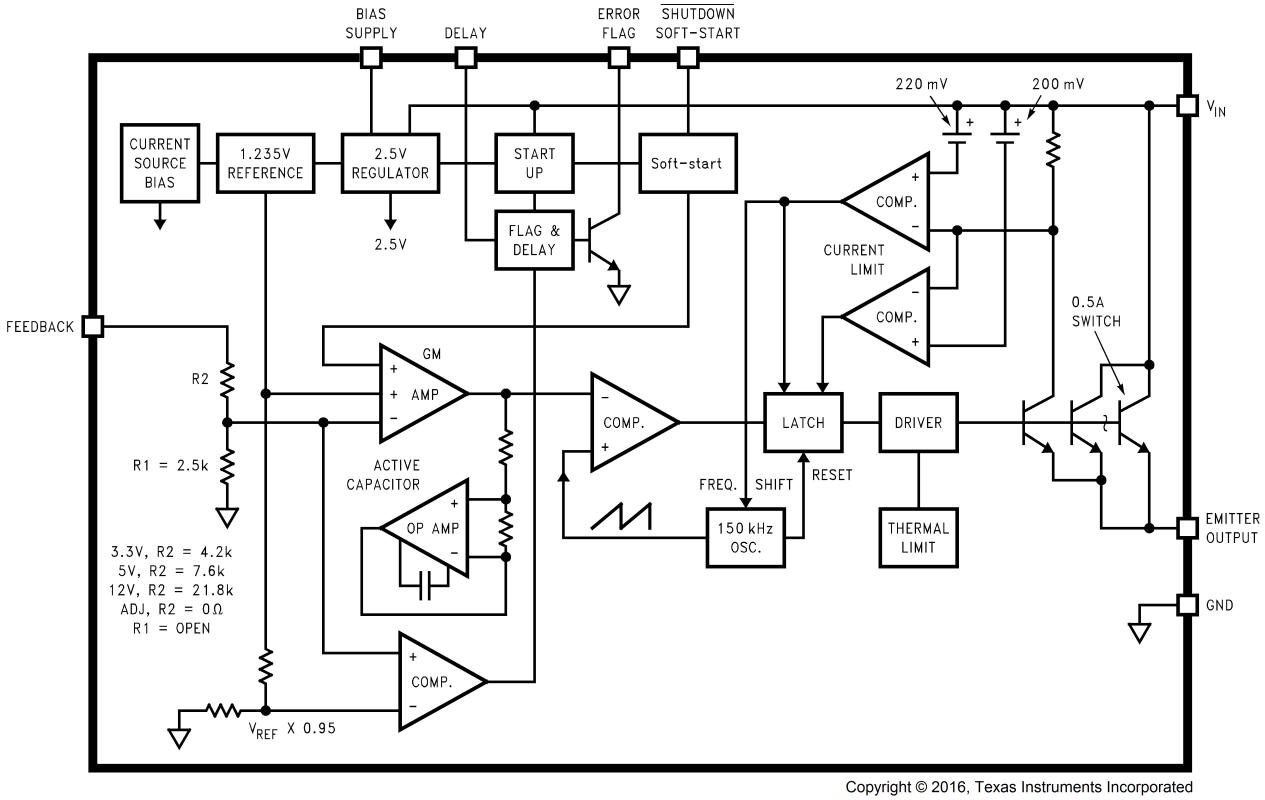


Copyright © 2016, Texas Instruments Incorporated

## 8.3 Feature Description

### 8.3.1 Bias Supply Feature

The bias supply ($V_{BS}$) pin allows the internal circuitry of the LM2597 to be powered from a power source, other than $V_{IN}$, typically the output voltage. This feature can increase efficiency and lower junction temperatures under some operating conditions. The greatest increase in efficiency occur with light load currents, high input voltage and low output voltage (4 V to 12 V). See efficiency curves shown in Figure 19 and Figure 20. The curves with solid lines are with the $V_{BS}$ pin connected to the regulated output voltage, while the curves with dashed lines are with the $V_{BS}$ pin open.

The bias supply pin requires a minimum of approximately 3.5 V at room temperature (4 V at −40°C), and can be as high as 30 V, but there is little advantage of using the bias supply feature with voltages greater than 15 V or 20 V. The current required for the $V_{IN}$ pin is typically 4 mA.

To use the bias supply feature with output voltages between 4 V and 15 V, wire the bias pin to the regulated output. Because the $V_{BS}$ pin requires a minimum of 4 V to operate, the 3.3-V part cannot be used this way. When the $V_{BS}$ pin is left open, the internal regulator circuitry is powered from the input voltage.

## Feature Description (continued)

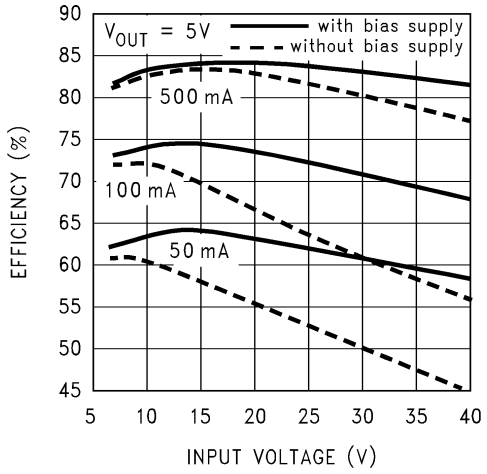


**Figure 19. Effects of Bias Supply Feature on 5-V Regulator Efficiency**

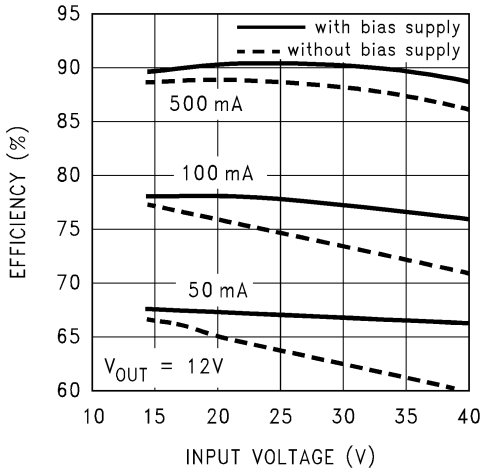


**Figure 20. Effects of Bias Supply Feature on 12-V Regulator Efficiency**

### 8.3.2 $\overline{\text{SHUTDOWN}}$ and Soft-Start

The circuit shown in Figure 23 is a standard buck regulator with 24 $V_{IN}$, 12 $V_{OUT}$, 100-mA load, and using a 0.068-µF soft-start capacitor. The photo in Figure 21 and Figure 22 show the effects of soft-start on the output voltage, the input current, with, and without a soft-start capacitor. Figure 21 also shows the error flag output going high when the output voltage reaches 95% of the nominal output voltage. The reduced input current required at start-up is very evident when comparing the two photos. The soft-start feature reduces the start-up current from 700 mA down to 160 mA, and delays and slows down the output voltage rise time.

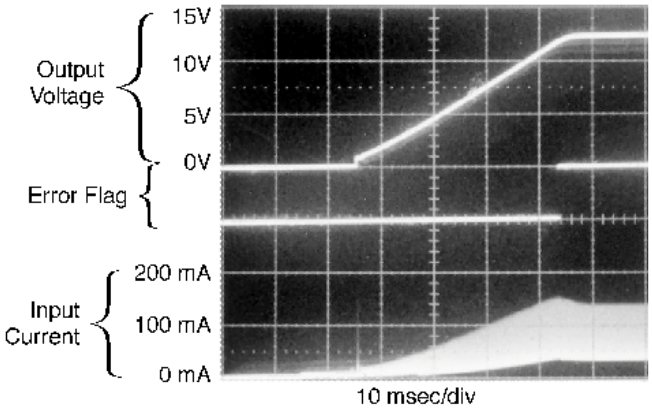


**Figure 21. Output Voltage, Input Current, and Error Flag Signal at Start-Up With Soft-start**

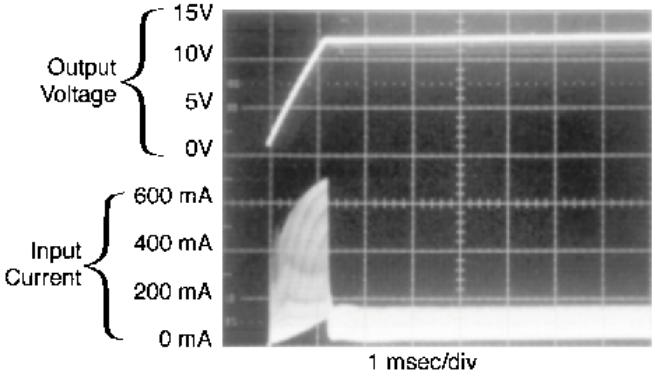


**Figure 22. Output Voltage and Input Current at Start-Up Without Soft-start**

This reduction in start-up current is useful in situations where the input power source is limited in the amount of current it can deliver. In some applications, soft start can be used to replace undervoltage lockout or delayed start-up functions.

If a very slow output voltage ramp is desired, the soft-start capacitor can be made much larger. Many seconds or even minutes are possible.

If only the shutdown feature is required, the soft-start capacitor can be eliminated.


Copyright © 1998–2016, Texas Instruments Incorporated

## Feature Description (continued)

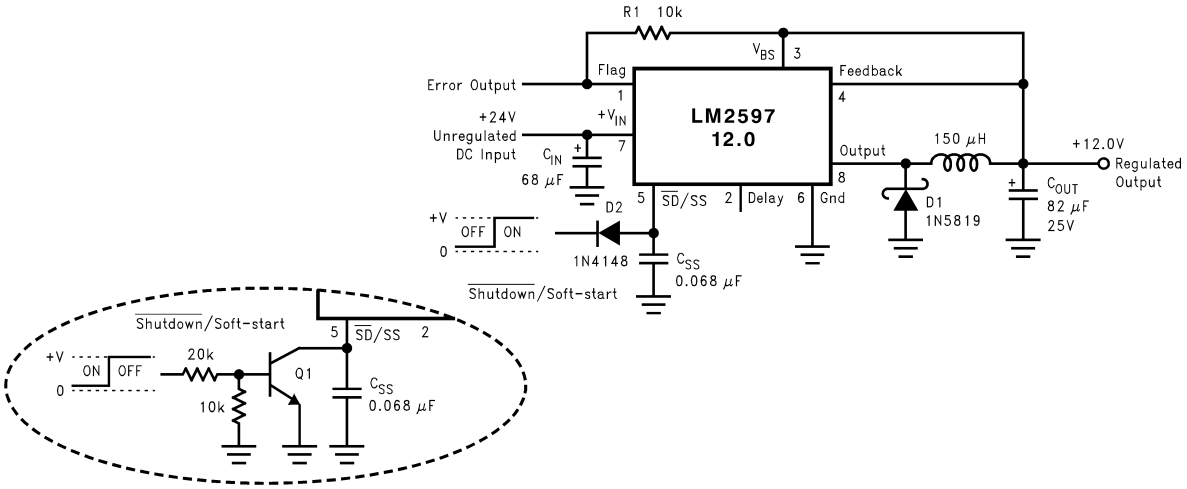


**Figure 23. Typical Circuit Using $\overline{\text{Shutdown}}$/Soft-Start and Error Flag Features**

### 8.3.3 Inverting Regulator

The circuit in Figure 24 converts a positive input voltage to a negative output voltage with a common ground. The circuit operates by bootstrapping the regulators ground pin to the negative output voltage, then grounding the feedback pin, the regulator senses the inverted output voltage and regulates it.

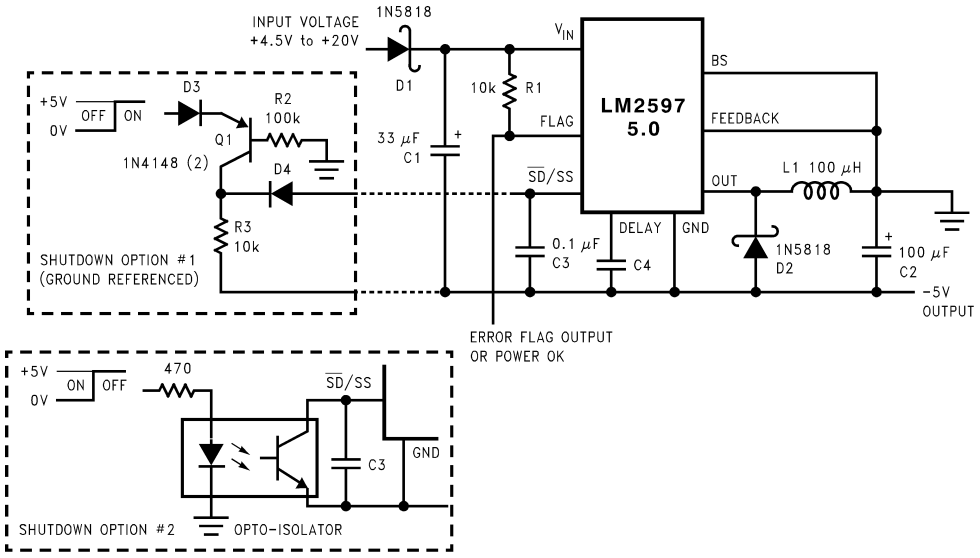


**Figure 24. Inverting –5-V Regulator With Shutdown and Soft-Start**

This example uses the LM2597-5 to generate a –5-V output, but other output voltages are possible by selecting other output voltage versions, including the adjustable version. Because this regulator topology can produce an output voltage that is either greater than or less than the input voltage, the maximum output current greatly depends on both the input and output voltage. The curve shown in Figure 25 provides a guide as to the amount of output load current possible for the different input and output voltage conditions.

The maximum voltage appearing across the regulator is the absolute sum of the input and output voltage, and this must be limited to a maximum of 40 V. In this example, when converting 20 V to −5 V, the regulator would see 25 V between the input pin and ground pin. The LM2597 has a maximum input voltage rating of 40 V (60 V for the LM2597HV).

Copyright © 1998–2016, Texas Instruments Incorporated

## Feature Description (continued)

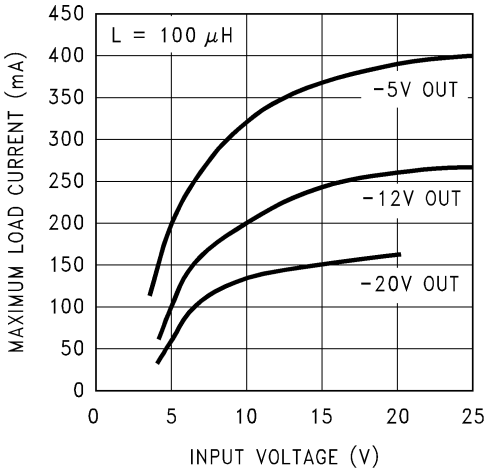


**Figure 25. Maximum Load Current for Inverting Regulator Circuit**

An additional diode is required in this regulator configuration. Diode D1 is used to isolate input voltage ripple or noise from coupling through the $C_{IN}$ capacitor to the output, under light or no load conditions. Also, this diode isolation changes the topology to closely resemble a buck configuration thus providing good closed loop stability. A Schottky diode is recommended for low input voltages, (because of its lower voltage drop) but for higher input voltages, a 1N4001 diode could be used.

Because of differences in the operation of the inverting regulator, the standard design procedure is not used to select the inductor value. In the majority of designs, a 100-μH, 1-A inductor is the best choice. Capacitor selection can also be narrowed down to just a few values. Using the values shown in Figure 24 will provide good results in the majority of inverting designs.

This type of inverting regulator can require relatively large amounts of input current when starting up, even with light loads. Input currents as high as the LM2597 current limit (approximately 0.8 A) are required for 1 ms or more, until the output reaches its nominal output voltage. The actual time depends on the output voltage and the size of the output capacitor. Input power sources that are current limited or sources that can not deliver these currents without getting loaded down, may not work correctly. Because of the relatively high start-up currents required by the inverting topology, the soft-start feature shown in Figure 24 is recommended.

Also shown in Figure 24 are several shutdown methods for the inverting configuration. With the inverting configuration, some level shifting is required, because the ground pin of the regulator is no longer at ground, but is now at the negative output voltage. The shutdown methods shown accept ground referenced shutdown signals.

### 8.3.4 Undervoltage Lockout

Some applications require the regulator to remain off until the input voltage reaches a predetermined voltage. Figure 26 shows an undervoltage lockout circuit for a buck configuration, while Figure 27 and Figure 28 are for the inverting types (only the circuitry pertaining to the undervoltage lockout is shown). Figure 26 uses a Zener diode to establish the threshold voltage when the switcher begins operating. When the input voltage is less than the Zener voltage, resistors R1 and R2 hold the Shutdown/Soft-start pin low, keeping the regulator in the shutdown mode. As the input voltage exceeds the Zener voltage, the Zener conducts, pulling the Shutdown/Soft-start pin high, allowing the regulator to begin switching. The threshold voltage for the undervoltage lockout feature is approximately 1.5 V greater than the Zener voltage.


Copyright © 1998–2016, Texas Instruments Incorporated

## Feature Description (continued)

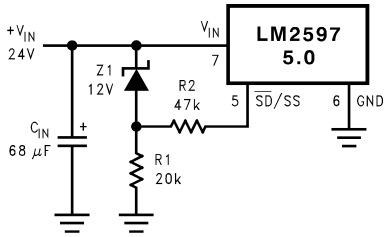


**Figure 26. Undervoltage Lockout for a Buck Regulator**

Figure 27 and Figure 28 apply the same feature to an inverting circuit. Figure 27 features a constant threshold voltage for turnon and turnoff (Zener voltage plus approximately 1 V). If hysteresis is required, the circuit in Figure 28 has a turnon voltage which is different than the turnoff voltage. The amount of hysteresis is approximately equal to the value of the output voltage. Since the SD/SS pin has an internal 7-V Zener clamp, R2 is required to limit the current into this pin to approximately 1 mA when Q1 is on.

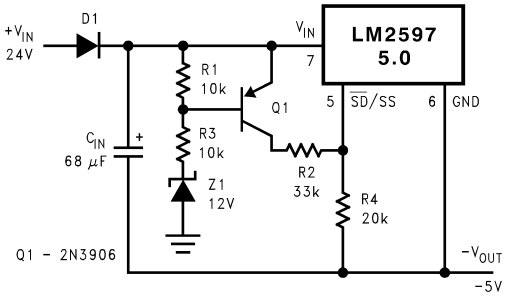


**Figure 27. Undervoltage Lockout Without Hysteresis for an Inverting Regulator**

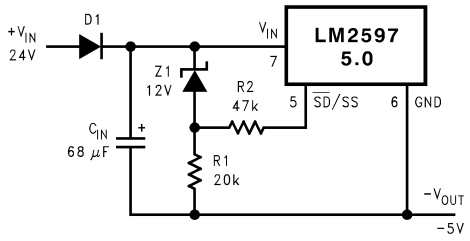


**Figure 28. Undervoltage Lockout With Hysteresis for an Inverting Regulator**

### 8.3.5 Negative Voltage Charge Pump

Occasionally a low current negative voltage is required for biasing parts of a circuit. A simple method of generating a negative voltage using a charge pump technique and the switching waveform present at the OUT pin, is shown in Figure 29. This unregulated negative voltage is approximately equal to the positive input voltage (minus a few volts), and can supply up to a 100 mA of output current. There is a requirement however, that there be a minimum load of several hundred mA on the regulated positive output for the charge pump to work correctly. Also, resistor R1 is required to limit the charging current of C1 to some value less than the LM2597 current limit (typically 800 mA).

This method of generating a negative output voltage without an additional inductor can be used with other members of the SIMPLE SWITCHER family, using either the buck or boost topology.

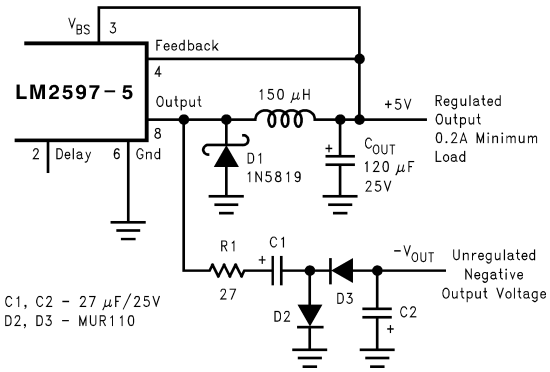


**Figure 29. Charge Pump for Generating a Low Current, Negative Output Voltage**

Copyright © 1998–2016, Texas Instruments Incorporated

## 8.4 Device Functional Modes

### 8.4.1 Discontinuous Mode Operation

The selection guide chooses inductor values suitable for continuous mode operation, but for low current applications or high input voltages, a discontinuous mode design may be a better choice. Discontinuous mode would use an inductor that would be physically smaller, and would need only one half to one third the inductance value required for a continuous mode design. The peak switch and inductor currents are higher in a discontinuous design, but at these low load currents (200 mA and below), the maximum switch current will still be less than the switch current limit.

Discontinuous operation can have voltage waveforms that are considerably different than a continuous design. The output pin (switch) waveform can have some damped sinusoidal ringing present. This ringing is normal for discontinuous operation, and is not caused by feedback loop instabilities. In discontinuous operation, there is a period of time where neither the switch nor the diode are conducting, and the inductor current has dropped to zero. During this time, a small amount of energy can circulate between the inductor and the switch and diode parasitic capacitance causing this characteristic ringing. Normally this ringing is not a problem, unless the amplitude becomes great enough to exceed the input voltage, and even then, there is very little energy present to cause damage.

Different inductor types or core materials produce different amounts of this characteristic ringing. Ferrite core inductors have very little core loss and therefore produce the most ringing. The higher core loss of powdered iron inductors produce less ringing. If desired, a series RC could be placed in parallel with the inductor to dampen the ringing.

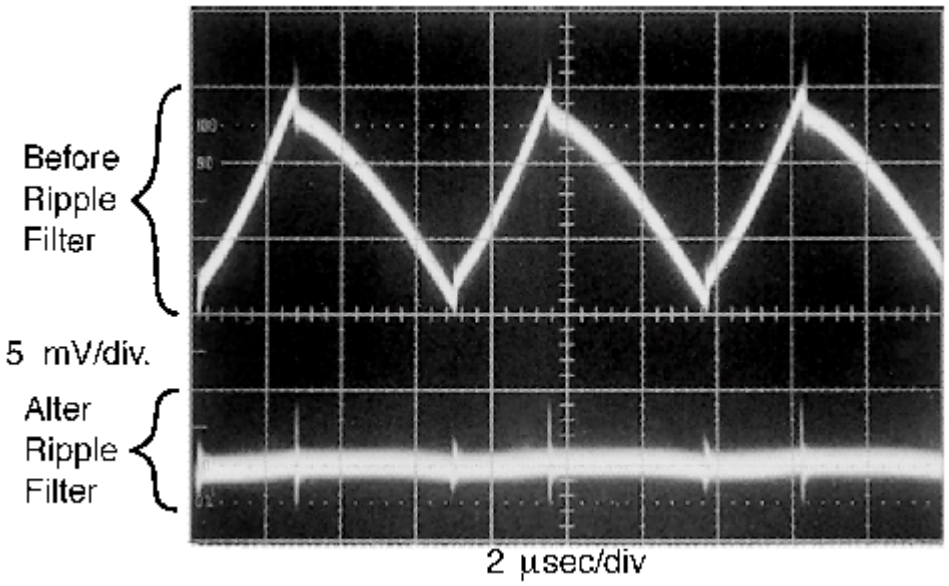


**Figure 30. Post Ripple Filter Waveform**


Copyright © 1998–2016, Texas Instruments Incorporated

# 9 Application and Implementation

**NOTE**

Information in the following applications sections is not part of the TI component specification, and TI does not warrant its accuracy or completeness. TI's customers are responsible for determining suitability of components for their purposes. Customers should validate and test their design implementation to confirm system functionality.

## 9.1 Application Information

### 9.1.1 Soft-Start Capacitor, $C_{SS}$

A capacitor on this pin provides the regulator with a soft-start feature (slow start-up). When the DC input voltage is first applied to the regulator, or when the Shutdown/Soft-start pin is allowed to go high, a constant current (approximately 5 μA begins charging this capacitor). As the capacitor voltage rises, the regulator goes through four operating regions (see the bottom curve in Figure 31).

1. Regulator in Shutdown – When the $\overline{SD}$/SS pin voltage is between 0 V and 1.3 V, the regulator is in shutdown, the output voltage is zero, and the IC quiescent current is approximately 85 μA.
2. Regulator ON, but the output voltage is zero – With the $\overline{SD}$/SS pin voltage between approximately 1.3 V and 1.8 V, the internal regulatory circuitry is operating, the quiescent current rises to approximately 5 mA, but the output voltage is still zero. Also, as the 1.3-V threshold is exceeded, the soft-start capacitor charging current decreases from 5 μA down to approximately 1.6 μA. This decreases the slope of capacitor voltage ramp.
3. Soft-start Region – When the $\overline{SD}$/SS pin voltage is between 1.8 V and 2.8 V (at 25°C), the regulator is in a soft-start condition. The switch (Pin 8) duty cycle initially starts out very low, with narrow pulses and gradually get wider as the capacitor $\overline{SD}$/SS pin ramps up towards 2.8 V. As the duty cycle increases, the output voltage also increases at a controlled ramp up. See the center curve in Figure 31. The input supply current requirement also starts out at a low level for the narrow pulses and ramp up in a controlled manner. This is a very useful feature in some switcher topologies that require large start-up currents (such as the inverting configuration) which can load down the input power supply.

**NOTE**

The lower curve shown in Figure 31 shows the soft-start region from 0% to 100%. This is not the duty cycle percentage, but the output voltage percentage. Also, the soft-start voltage range has a negative temperature coefficient associated with it. See the soft-start curve in *Electrical Characteristics*.

4. Normal operation – Above 2.8 V, the circuit operates as a standard Pulse Width Modulated switching regulator. The capacitor will continue to charge up until it reaches the internal clamp voltage of approximately 7 V. If this pin is driven from a voltage source, the current must limit to about 1 mA. If the part is operated with an input voltage at or below the internal soft-start clamp voltage of approximately 7 V, the voltage on the $\overline{SD}$/SS pin tracks the input voltage and can be disturbed by a step in the voltage. To maintain proper function under these conditions, TI strongly recommends clamping the $\overline{SD}$/SS pin externally between the 3-V maximum soft-start threshold and the 4.5-V minimum input voltage. Figure 32 is an example of an external 3.7 V (approximately) clamp that prevents a line-step related glitch but does not interfere with the soft-start behavior of the device.

Copyright © 1998–2016, Texas Instruments Incorporated

## Application Information (continued)

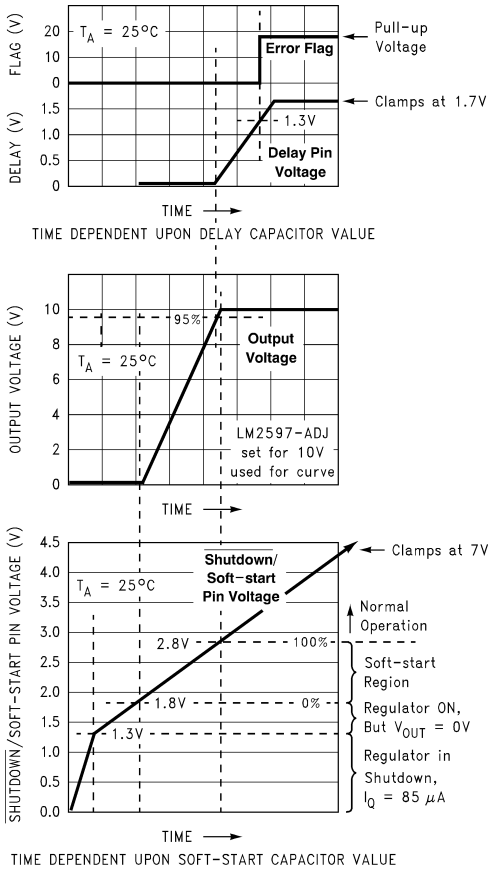


**Figure 31. Soft-Start, Delay, Error, and Output**

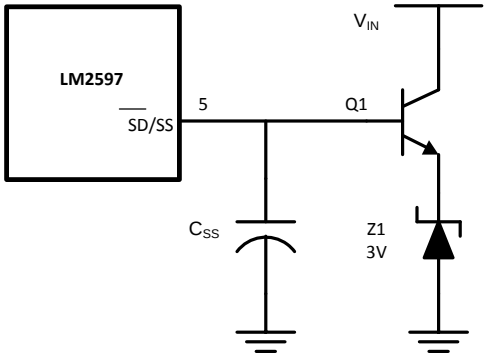


**Figure 32. External 3.7-V Soft-Start Clamp**

### 9.1.2 Delay Capacitor, $C_{DELAY}$

Provides delay for the error flag output. See the upper curve in Figure 31, and also refer to timing diagrams in Figure 33. A capacitor on this pin provides a time delay between the time the regulated output voltage (when it is increasing in value) reaches 95% of the nominal output voltage, and the time the error flag output goes high. A 3-μA constant current from the delay pin charges the delay capacitor resulting in a voltage ramp. When this voltage reaches a threshold of approximately 1.3 V, the open collector error flag output (or power OK) goes high. This signal can be used to indicate that the regulated output has reached the correct voltage and has stabilized.


Copyright © 1998–2016, Texas Instruments Incorporated

## Application Information (continued)

If, for any reason, the regulated output voltage drops by 5% or more, the error output flag (Pin 1) immediately goes low (internal transistor turns on). The delay capacitor provides very little delay if the regulated output is dropping out of regulation. The delay time for an output that is decreasing is approximately a 1000 times less than the delay for the rising output. For a 0.1-μF delay capacitor, the delay time would be approximately 50 ms when the output is rising and passes through the 95% threshold, but the delay for the output dropping would only be approximately 50 μs.

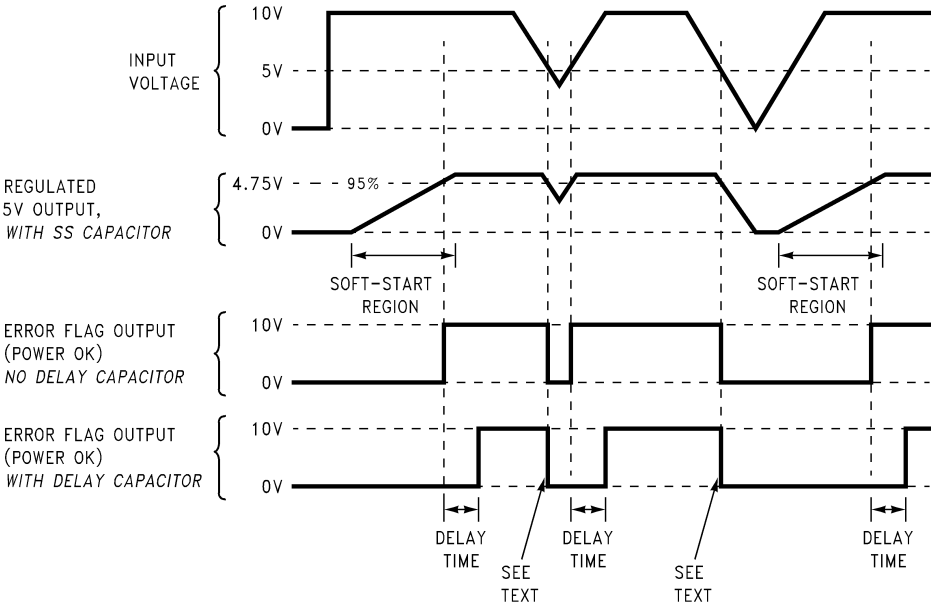


**Figure 33. Timing Diagram for 5-V Output**

#### *9.1.2.1 $R_{PULLUP}$*

The error flag output, (or power OK) is the collector of a NPN transistor, with the emitter internally grounded. To use the error flag, a pullup resistor to a positive voltage is required. The error flag transistor is rated up to a maximum of 45 V and can sink approximately 3 mA. If the error flag is not used, it can be left open.

### 9.1.3 Input Capacitor, $C_{IN}$

A low ESR aluminum or tantalum bypass capacitor is required between the input pin and ground pin. The capacitor must be located near the regulator using short leads. This capacitor prevents large voltage transients from appearing at the input, and provides the instantaneous current required each time the switch turns on.

The important parameters for the Input capacitor are the voltage rating and the RMS current rating. Because of the relatively high RMS currents flowing in a input capacitor of a buck regulator, this capacitor must be chosen for its RMS current rating rather than its capacitance or voltage ratings, although the capacitance value and voltage rating are directly related to the RMS current rating.

The RMS current rating of a capacitor could be viewed as a power rating of the capacitor. The RMS current flowing through the capacitors internal ESR produces power which causes the internal temperature of the capacitor to rise. The RMS current rating of a capacitor is determined by the amount of current required to raise the internal temperature approximately 10°C above an ambient temperature of 105°C. The ability of the capacitor to dissipate this heat to the surrounding air will determine the amount of current the capacitor can safely sustain. Capacitors that are physically large and have a large surface area will typically have higher RMS current ratings. For a given capacitor value, a higher voltage electrolytic capacitor will be physically larger than a lower voltage capacitor, and thus be able to dissipate more heat to the surrounding air, and therefore will have a higher RMS current rating.

Copyright © 1998–2016, Texas Instruments Incorporated

## Application Information (continued)

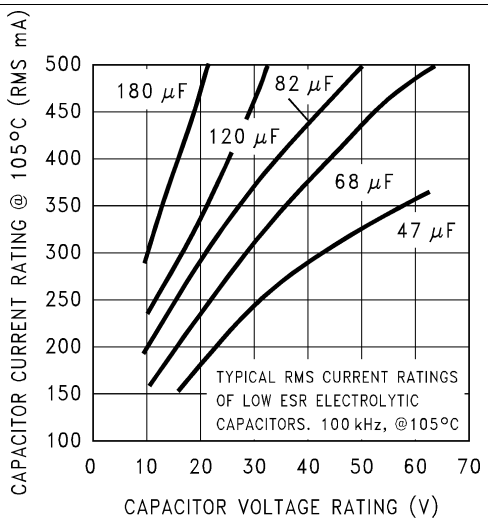


**Figure 34. RMS Current Ratings for Low ESR Electrolytic Capacitors (Typical)**

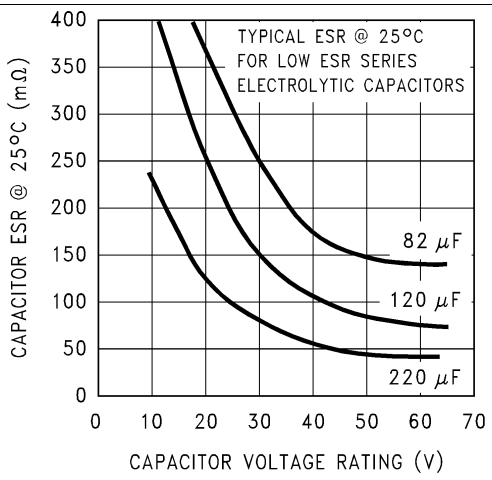


**Figure 35. Capacitor ESR vs Capacitor Voltage Rating (Typical Low ESR Electrolytic Capacitor)**

The consequences of operating an electrolytic capacitor above the RMS current rating is a shortened operating life. The higher temperature speeds up the evaporation of the electrolyte of the capacitor, resulting in eventual failure.

Selecting an input capacitor requires consulting the manufacturers data sheet for maximum allowable RMS ripple current. For a maximum ambient temperature of 40°C, a general guideline would be to select a capacitor with a ripple current rating of approximately 50% of the DC load current. For ambient temperatures up to 70°C, a current rating of 75% of the DC load current would be a good choice for a conservative design. The capacitor voltage rating must be at least 1.25 times greater than the maximum input voltage, and often a much higher voltage capacitor is required to satisfy the RMS current requirements.

Figure 34 shows the relationship between an electrolytic capacitor value, its voltage rating, and the RMS current it is rated for. These curves were obtained from the Nichicon *PL* series of low-ESR, high-reliability electrolytic capacitors designed for switching regulator applications. Other capacitor manufacturers offer similar types of capacitors, but always check the capacitor data sheet.

*Standard* electrolytic capacitors typically have much higher ESR numbers, lower RMS current ratings and typically have a shorter operating lifetime.

Because of their small size and excellent performance, surface-mount solid tantalum capacitors are often used for input bypassing, but several precautions must be observed. A small percentage of solid tantalum capacitors can short if the inrush current rating is exceeded. This can happen at turnon when the input voltage is suddenly applied, and of course, higher input voltages produce higher inrush currents. Several capacitor manufacturers do a 100% surge current testing on their products to minimize this potential problem. If high turnon currents are expected, it may be necessary to limit this current by adding either some resistance or inductance before the tantalum capacitor, or select a higher voltage capacitor. As with aluminum electrolytic capacitors, the RMS ripple current rating must be sized to the load current.

### 9.1.4 Output Capacitor, $C_{OUT}$

An output capacitor is required to filter the output and provide regulator loop stability. Use a low impedance or low ESR Electrolytic or solid tantalum capacitors designed for switching regulator applications. When selecting an output capacitor, the important capacitor parameters are; the 100-kHz Equivalent Series Resistance (ESR), the RMS ripple current rating, voltage rating, and capacitance value. For the output capacitor, the ESR value is the most important parameter.


Copyright © 1998–2016, Texas Instruments Incorporated

## Application Information (continued)

The output capacitor requires an ESR value that has an upper and lower limit. For low output ripple voltage, a low ESR value is required. This value is determined by the maximum allowable output ripple voltage, typically 1% to 2% of the output voltage. But if the ESR of the selected capacitor is extremely low, there is a possibility of an unstable feedback loop, resulting in an oscillation at the output. Using the capacitors listed in the tables, or similar types, will provide design solutions under all conditions.

If very low output ripple voltage (less than 15 mV) is required, see *Output Voltage Ripple and Transients* for a post ripple filter.

An aluminum electrolytic capacitor's ESR value is related to the capacitance value and its voltage rating. In most cases, Higher voltage electrolytic capacitors have lower ESR values (see Figure 35). Often, capacitors with much higher voltage ratings are required to provide the low ESR values required for low output ripple voltage.

The output capacitor for many different switcher designs are often satisfied with only three or four different capacitor values and several different voltage ratings. See Table 4 and Table 6 for typical capacitor values, voltage ratings, and manufacturers capacitor types.

Electrolytic capacitors are not recommended for temperatures below −25°C. The ESR rises dramatically at cold temperatures and typically rises 3X at −25°C and as much as 10X at −40°C (see Figure 36).

Solid tantalum capacitors have a much better ESR specifications for cold temperatures and are recommended for temperatures below −25°C.

### 9.1.5 Catch Diode

Buck regulators require a diode to provide a return path for the inductor current when the switch turns off. This must be a fast diode, located close to the LM2594 using short leads and short printed-circuit traces.

Because of their very fast switching speed and low forward voltage drop, Schottky diodes provide the best performance, especially in low output voltage applications (5 V and lower). Ultra-fast recovery, or high-efficiency rectifiers are also a good choice, but some types with an abrupt turnoff characteristic may cause instability or EMI problems. Ultra-fast recovery diodes typically have reverse recovery times of 50 ns or less. Rectifiers such as the 1N4001 series are much too slow and must not be used.

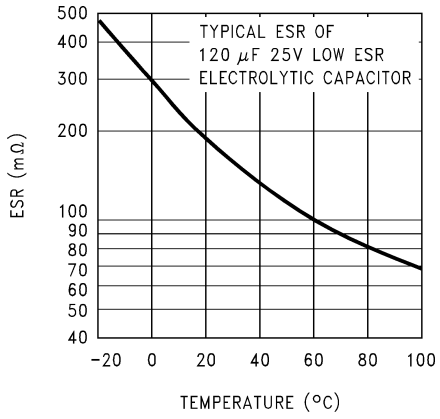


**Figure 36. Capacitor ESR Change vs Temperature**

Copyright © 1998–2016, Texas Instruments Incorporated

## Application Information (continued)

**Table 1. Diode Selection Table**

| VR | 1-A DIODES | | | |
|---|---|---|---|---|
| | SURFACE-MOUNT | | THROUGH-HOLE | |
| | SCHOTTKY | ULTRA FAST RECOVERY | SCHOTTKY | ULTRA FAST RECOVERY |
| 20 V | | All of these diodes are rated to at least 60 V. | 1N5817 | All of these diodes are rated to at least 60 V. |
| | | | SR102 | |
| 30 V | MBRS130 | | 1N5818 | |
| | | | SR103 | |
| | | | 11DQ03 | |
| 40 V | MBRS140 | MURS120<br>10BF10 | 1N5819 | HER101<br>MUR120<br>11DF1 |
| | 10BQ040 | | SR104 | |
| | 10MQ040 | | 11DQ04 | |
| 50 V or more | MBRS160 | | SR105 | |
| | 10BQ050 | | MBR150 | |
| | 10MQ060 | | 11DQ05 | |
| | MBRS1100 | | MBR160 | |
| | 10MQ090 | | SB160 | |
| | SGL41-60 | | 11DQ10 | |
| | SS16 | | | |

### 9.1.6 Inductor Selection

All switching regulators have two basic modes of operation: continuous and discontinuous. The difference between the two types relates to the inductor current, whether it is flowing continuously, or if it drops to zero for a period of time in the normal switching cycle. Each mode has distinctively different operating characteristics, which can affect the regulators performance and requirements. Most switcher designs will operate in the discontinuous mode when the load current is low.

The LM2597 (or any of the SIMPLE SWITCHER family) can be used for both continuous or discontinuous modes of operation.

In many cases the preferred mode of operation is the continuous mode. This mode offers greater output power, lower peak switch, inductor, and diode currents, and can have lower output ripple voltage. However, the continuous mode requires larger inductor values to keep the inductor current flowing continuously, especially at low output load currents or high input voltages.

To simplify the inductor selection process, an inductor selection guide (nomograph) was designed. This guide assumes that the regulator is operating in the continuous mode, and selects an inductor that will allow a peak-to-peak inductor ripple current to be a certain percentage of the maximum design load current. This peak-to-peak inductor ripple current percentage is not fixed, but is allowed to change as different design load currents are selected (see Figure 37).


Copyright © 1998–2016, Texas Instruments Incorporated

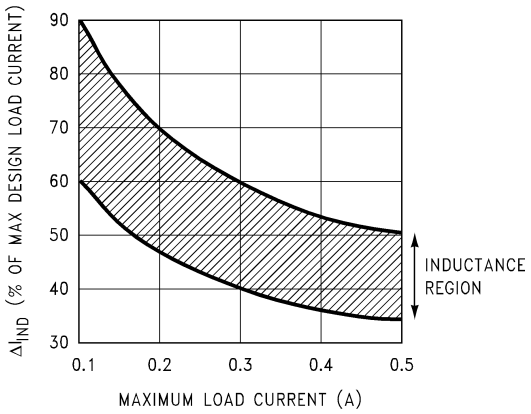


**Figure 37. ($\Delta I_{IND}$) Peak-to-Peak Inductor Ripple Current (as a Percentage of the Load Current) vs Load Current**

By allowing the percentage of inductor ripple current to increase for low load currents, the inductor value and size can be kept relatively low.

When operating in the continuous mode, the inductor current waveform ranges from a triangular to a sawtooth type of waveform (depending on the input voltage), with the average value of this current waveform equal to the DC output load current.

Inductors are available in different styles such as pot core, toroid, E-core, bobbin core, and so forth, as well as different core materials, such as ferrites and powdered iron. The least expensive, the bobbin, rod or stick core, consists of wire wrapped on a ferrite bobbin. This type of construction makes for a inexpensive inductor; however, because the magnetic flux is not completely contained within the core, it generates more Electro-Magnetic Interference (EMI). This magnetic flux can induce voltages into nearby printed-circuit traces, thus causing problems with both the switching regulator operation and nearby sensitive circuitry, and can give incorrect scope readings because of induced voltages in the scope probe (see *Open Core Inductors*).

The inductors listed in the selection chart include ferrite E-core construction for Schott, ferrite bobbin core for Renco and Coilcraft, and powdered iron toroid for Pulse Engineering.

Exceeding the maximum current rating of an inductor may cause the inductor to overheat because of the copper wire losses, or the core may saturate. If the inductor begins to saturate, the inductance decreases rapidly and the inductor begins to look mainly resistive (the DC resistance of the winding). This can cause the switch current to rise very rapidly and force the switch into a cycle-by-cycle current limit, thus reducing the DC output load current. This can also result in overheating of the inductor and the LM2597. Different inductor types have different saturation characteristics, so consider this when selecting an inductor.

The inductor manufacturers data sheets include current and energy limits to avoid inductor saturation.

For continuous mode operation, see the inductor selection graphs in Figure 38 through Figure 41

Copyright © 1998–2016, Texas Instruments Incorporated

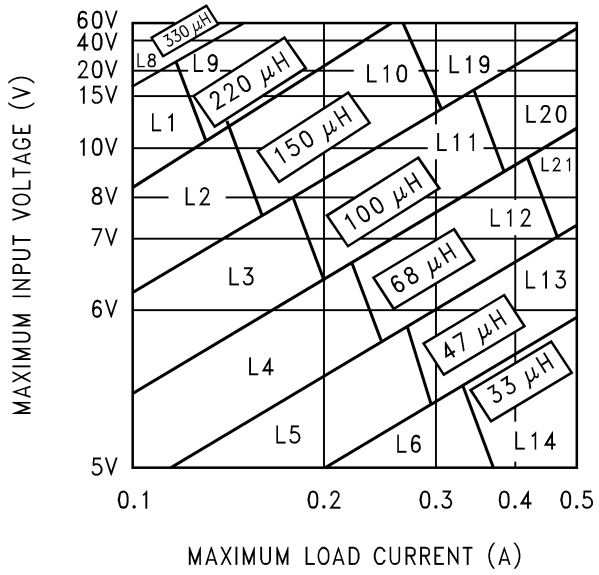


**Figure 38. LM2597xx 3.3-V Version**

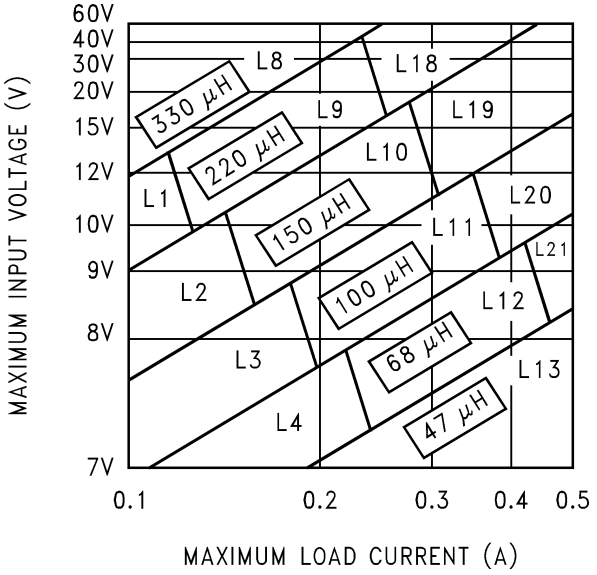


**Figure 39. LM2597xx 5-V Version**

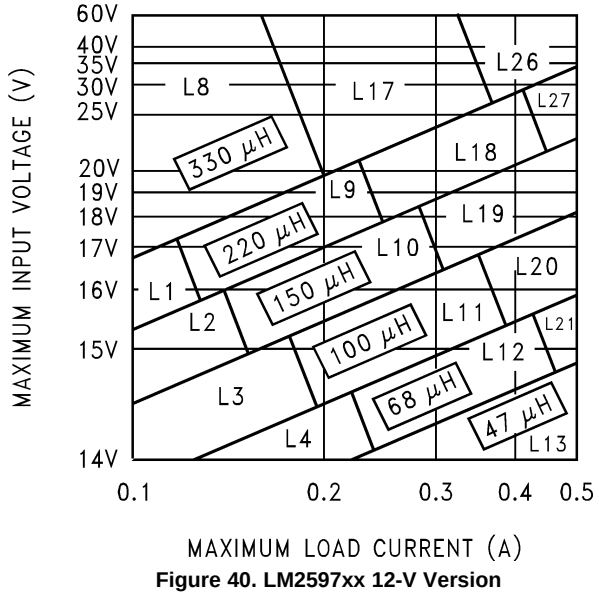


**Figure 40. LM2597xx 12-V Version**

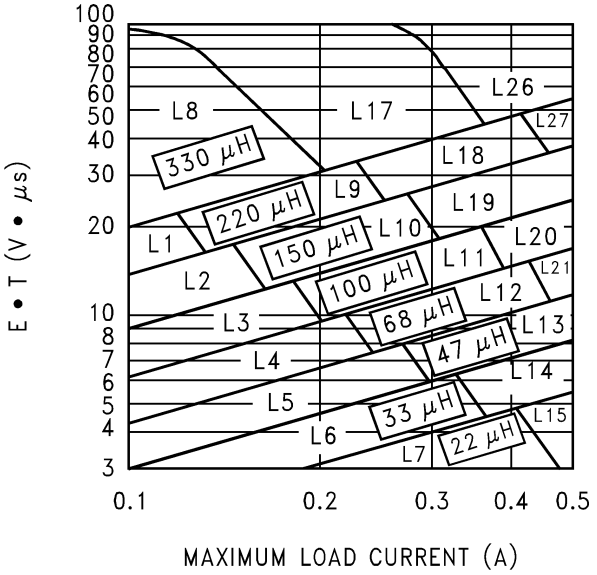


**Figure 41. LM2597xx Adjustable Voltage Version**


Copyright © 1998–2016, Texas Instruments Incorporated

**Table 2. Inductor Manufacturers' Part Numbers**

| | INDUCTANCE (μH) | CURRENT (A) | SCHOTT | | RENCO | | PULSE ENGINEERING | | COILCRAFT |
|---|---|---|---|---|---|---|---|---|---|
| | | | THROUGH-HOLE | SURFACE-MOUNT | THROUGH-HOLE | SURFACE-MOUNT | THROUGH-HOLE | SURFACE-MOUNT | SURFACE-MOUNT |
| L1 | 220 | 0.18 | 67143910 | 67144280 | RL-5470-3 | RL1500-220 | PE-53801 | PE-53801-S | DO1608-224 |
| L2 | 150 | 0.21 | 67143920 | 67144290 | RL-5470-4 | RL1500-150 | PE-53802 | PE-53802-S | DO1608-154 |
| L3 | 100 | 0.26 | 67143930 | 67144300 | RL-5470-5 | RL1500-100 | PE-53803 | PE-53803-S | DO1608-104 |
| L4 | 68 | 0.32 | 67143940 | 67144310 | RL-1284-68 | RL1500-68 | PE-53804 | PE-53804-S | DO1608-68 |
| L5 | 47 | 0.37 | 67148310 | 67148420 | RL-1284-47 | RL1500-47 | PE-53805 | PE-53805-S | DO1608-473 |
| L6 | 33 | 0.44 | 67148320 | 67148430 | RL-1284-33 | RL1500-33 | PE-53806 | PE-53806-S | DO1608-333 |
| L7 | 22 | 0.6 | 67148330 | 67148440 | RL-1284-22 | RL1500-22 | PE-53807 | PE-53807-S | DO1608-223 |
| L8 | 330 | 0.26 | 67143950 | 67144320 | RL-5470-2 | RL1500-330 | PE-53808 | PE-53808-S | DO3308-334 |
| L9 | 220 | 0.32 | 67143960 | 67144330 | RL-5470-3 | RL1500-220 | PE-53809 | PE-53809-S | DO3308-224 |
| L10 | 150 | 0.39 | 67143970 | 67144340 | RL-5470-4 | RL1500-150 | PE-53810 | PE-53810-S | DO3308-154 |
| L11 | 100 | 0.48 | 67143980 | 67144350 | RL-5470-5 | RL1500-100 | PE-53811 | PE-53811-S | DO3308-104 |
| L12 | 68 | 0.58 | 67143990 | 67144360 | RL-5470-6 | RL1500-68 | PE-53812 | PE-53812-S | DO1608-683 |
| L13 | 47 | 0.7 | 67144000 | 67144380 | RL-5470-7 | RL1500-47 | PE-53813 | PE-53813-S | DO3308-473 |
| L14 | 33 | 0.83 | 67148340 | 67148450 | RL-1284-33 | RL1500-33 | PE-53814 | PE-53814-S | DO1608-333 |
| L15 | 22 | 0.99 | 67148350 | 67148460 | RL-1284-22 | RL1500-22 | PE-53815 | PE-53815-S | DO1608-223 |
| L16 | 15 | 1.24 | 67148360 | 67148470 | RL-1284-15 | RL1500-15 | PE-53816 | PE-53816-S | DO1608-153 |
| L17 | 330 | 0.42 | 67144030 | 67144410 | RL-5471-1 | RL1500-330 | PE-53817 | PE-53817-S | DO3316-334 |
| L18 | 220 | 0.55 | 67144040 | 67144420 | RL-5471-2 | RL1500-220 | PE-53818 | PE-53818-S | DO3316-224 |
| L19 | 150 | 0.66 | 67144050 | 67144430 | RL-5471-3 | RL1500-150 | PE-53819 | PE-53819-S | DO3316-154 |
| L20 | 100 | 0.82 | 67144060 | 67144440 | RL-5471-4 | RL1500-100 | PE-53820 | PE-53820-S | DO3316-104 |
| L21 | 68 | 0.99 | 67144070 | 67144450 | RL-5471-5 | RL1500-68 | PE-53821 | PE-53821-S | DDO3316-683 |
| L26 | 330 | 0.8 | 67144100 | 67144480 | RL-5471-1 | — | PE-53826 | PE-53826-S | — |
| L27 | 220 | 1 | 67144110 | 67144490 | RL-5471-2 | — | PE-53827 | PE-53827-S | — |

### 9.1.7 Output Voltage Ripple and Transients

The output voltage of a switching power supply operating in the continuous mode will contain a sawtooth ripple voltage at the switcher frequency, and may also contain short voltage spikes at the peaks of the sawtooth waveform.

The output ripple voltage is a function of the inductor sawtooth ripple current and the ESR of the output capacitor. A typical output ripple voltage can range from approximately 0.5% to 3% of the output voltage. To obtain low ripple voltage, the ESR of the output capacitor must be low; however, caution must be exercised when using extremely low ESR capacitors because they can affect the loop stability, resulting in oscillation problems. If very low output ripple voltage is required (less than 15 mV), TI recommends a post ripple filter (see Figure 46). The inductance required is typically between 1 μH and 5 μH, with low DC resistance, to maintain good load regulation. A low ESR output filter capacitor is also required to assure good dynamic load response and ripple reduction. The ESR of this capacitor may be as low as desired, because it is out of the regulator feedback loop. Figure 30 shows a typical output ripple voltage, with and without a post ripple filter.

When observing output ripple with a scope, it is essential that a short, low inductance scope probe ground connection be used. Most scope probe manufacturers provide a special probe terminator which is soldered onto the regulator board, preferably at the output capacitor. This provides a very short scope ground, thus eliminating the problems associated with the 3 inch ground lead normally provided with the probe, and provides a much cleaner and more accurate picture of the ripple voltage waveform.

The voltage spikes are caused by the fast switching action of the output switch, the diode, the parasitic inductance of the output filter capacitor, and its associated wiring. To minimize these voltage spikes, the output capacitor must be designed for switching regulator applications, and the lead lengths must be kept very short. Wiring inductance, stray capacitance, as well as the scope probe used to evaluate these transients, all contribute to the amplitude of these spikes.

Copyright © 1998–2016, Texas Instruments Incorporated

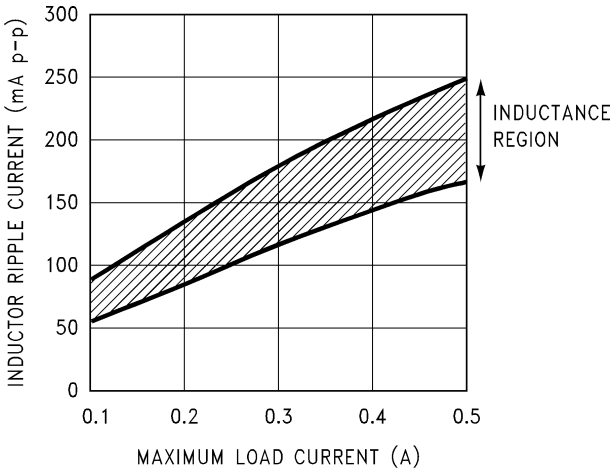


**Figure 42. Peak-to-Peak Inductor Ripple Current vs Load Current**

When a switching regulator is operating in the continuous mode, the inductor current waveform ranges from a triangular to a sawtooth type of waveform (depending on the input voltage). For a given input and output voltage, the peak-to-peak amplitude of this inductor current waveform remains constant. As the load current increases or decreases, the entire sawtooth current waveform also rises and falls. The average value (or the center) of this current waveform is equal to the DC load current.

If the load current drops to a low enough level, the bottom of the sawtooth current waveform reaches zero, and the switcher will smoothly change from a continuous to a discontinuous mode of operation. Most switcher designs (regardless how large the inductor value is) will be forced to run discontinuous if the output is lightly loaded. This is a perfectly acceptable mode of operation.

In a switching regulator design, knowing the value of the peak-to-peak inductor ripple current ($\Delta I_{IND}$) can be useful for determining a number of other circuit parameters. Parameters such as, peak inductor or peak switch current, minimum load current before the circuit becomes discontinuous, output ripple voltage and output capacitor ESR can all be calculated from the peak-to-peak $\Delta I_{IND}$. When the inductor nomographs shown in Figure 38 through Figure 41 are used to select an inductor value, the peak-to-peak inductor ripple current can immediately be determined. Figure 42 shows the range of ($\Delta I_{IND}$) that can be expected for different load currents. Figure 42 also shows how the peak-to-peak inductor ripple current ($\Delta I_{IND}$) changes as the designer goes from the lower border to the upper border (for a given load current) within an inductance region. The upper border represents a higher input voltage, while the lower border represents a lower input voltage (see *Inductor Selection*).

These curves are only correct for continuous mode operation, and only if the inductor selection guides are used to select the inductor value

Consider the following example:

$V_{OUT}$ = 5 V, maximum load current of 300 mA

$V_{IN}$ = 15 V (nominal), varying between 11 V and 20 V

The selection guide in Figure 39 shows that the vertical line for a 0.3-A load current and the horizontal line for the 15-V input voltage intersect approximately midway between the upper and lower borders of the 150-µH inductance region. A 150-µH inductor allows a peak-to-peak inductor current ($\Delta I_{IND}$) to flow a percentage of the maximum load current. Referring to Figure 42, follow the 0.3-A line approximately midway into the inductance region, and read the peak-to-peak inductor ripple current ($\Delta I_{IND}$) on the left hand axis (approximately 150 $mA_{p-p}$).

As the input voltage increases to 20 V, it approaches the upper border of the inductance region, and the inductor ripple current increases. Figure 42 shows that for a load current of 0.3 A, the peak-to-peak inductor ripple current ($\Delta I_{IND}$) is 150 mA with 15 $V_{IN}$, and can range from 175 mA at the upper border (20 $V_{IN}$) to 120 mA at the lower border (11 $V_{IN}$).


Copyright © 1998–2016, Texas Instruments Incorporated

Once the $\Delta I_{IND}$ value is known, the following formulas can be used to calculate additional information about the switching regulator circuit.

1. Peak Inductor or peak switch current
   $= \left(I_{LOAD} + \frac{\Delta I_{IND}}{2}\right) = \left(0.3A + \frac{0.150}{2}\right) = 0.375A$
2. Minimum load current before the circuit becomes discontinuous
   $= \frac{\Delta I_{IND}}{2} = \frac{0.150}{2} = 0.075A$
3. Output Ripple Voltage
   – = $(\Delta I_{IND}) \times$ (ESR of $C_{OUT}$)
   – = 0.150 A × 0.240 Ω = 36 $mV_{p-p}$
   – or
4. ESR of $C_{OUT}$
   $= \frac{\text{Output Ripple Voltage } (\Delta V_{OUT})}{\Delta I_{IND}}$
   $= \frac{0.036V}{0.150A} = 0.240\Omega$

### 9.1.8 Open Core Inductors

Another possible source of increased output ripple voltage or unstable operation is from an open-core inductor. Ferrite bobbin or stick inductors have magnetic lines of flux flowing through the air from one end of the bobbin to the other end. These magnetic lines of flux will induce a voltage into any wire or PCB copper trace that comes within the magnetic field of the inductor. The strength of the magnetic field, the orientation and location of the PC copper trace to the magnetic field, and the distance between the copper trace and the inductor determine the amount of voltage generated in the copper trace. Another way of looking at this inductive coupling is to consider the PCB copper trace as one turn of a transformer (secondary) with the inductor winding as the primary. Many millivolts can be generated in a copper trace located near an open-core inductor, which can cause stability problems or high output ripple voltage problems.

If unstable operation is seen, and an open core inductor is used, it is possible that the location of the inductor with respect to other PC traces may be the problem. To determine if this is the problem, temporarily raise the inductor away from the board by several inches and then check circuit operation. If the circuit now operates correctly, then the magnetic flux from the open-core inductor is causing the problem. Substituting a closed-core inductor such as a torroid or E-core will correct the problem, or re-arranging the PC layout may be necessary. Magnetic flux cutting the IC device ground trace, feedback trace, or the positive or negative traces of the output capacitor must be minimized.

Sometimes, placing a trace directly beneath a bobbin inductor will provide good results, provided it is exactly in the center of the inductor (because the induced voltages cancel themselves out). However, problems could arise if the trace is off center. If flux problems are present, even the direction of the inductor winding can make a difference in some circuits.

This discussion on open-core inductors is not to frighten users, but to alert them on what kind of problems to watch out for. Open-core bobbin or *stick* inductors are an inexpensive, simple way of making a compact, efficient inductor, and they are used by the millions in many different applications.

Copyright © 1998–2016, Texas Instruments Incorporated

## 9.2 Typical Applications

### 9.2.1 Series Buck Regulator (Fixed Output)

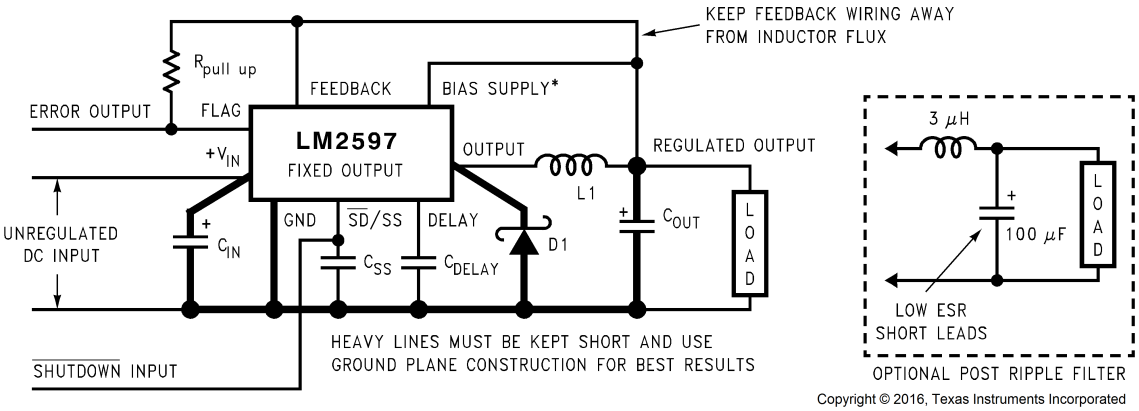


Copyright © 2016, Texas Instruments Incorporated

Component values shown are for $V_{IN}$ = 15 V, $V_{OUT}$ = 5 V, $I_{LOAD}$ = 500 mA
$C_{IN}$ – 47-μF, 50-V, Aluminum Electrolytic Nichico *L Series*
$C_{OUT}$ – 120-μF, 25-V Aluminum Electrolytic, Nichicon *PL Series*
D1 – 1–A, 30–V Schottky Rectif 1N5818
L1 – 100-μH, L20
*Typical Values*
$C_{SS}$ – 0.1 μF
$C_{DELAY}$ – 0.1 μF
$R_{Pull\ Up}$ – 4.7k
*Use bias supply pin for 5-V and 12-V versions

**Figure 43. Fixed Output Voltage Versions**

#### *9.2.1.1 Design Requirements*

Table 3 lists the design parameters for this application example.

**Table 3. Design Parameters**

| PARAMETER | EXAMPLE VALUE |
|---|---|
| Regulated output voltage (3.3 V, 5 V or 12 V), $V_{OUT}$ | 5 V |
| Maximum DC input voltage, $V_{IN}$(max) | 12 V |
| Maximum load current, $I_{LOAD}$(max) | 0.4 A |

#### *9.2.1.2 Detailed Design Procedure*

##### 9.2.1.2.1 Inductor Selection (L1)

1. Select the correct inductor value selection guide from Figure 38, Figure 39, or Figure 40 (output voltages of 3.3 V, 5 V, or 12 V respectively). For all other voltages, see the design procedure for the adjustable version.

   Use the inductor selection guide for the 5-V version shown in Figure 39.
2. From the inductor value selection guide, identify the inductance region intersected by the maximum input voltage line and the maximum load current line. Each region is identified by an inductance value and an inductor code (LXX).

   From the inductor value selection guide shown in Figure 39, the inductance region intersected by the 12-V horizontal line and the 0.4-A vertical line is 100 μH, and the inductor code is L20.
3. Select an appropriate inductor from the four manufacturer's part numbers listed in Table 2.

   The inductance value required is 100 μH. See row L20 of Table 2 and choose an inductor part number from any of the four manufacturers shown. (In most instance, both through-hole and surface-mount inductors are available.)


Copyright © 1998–2016, Texas Instruments Incorporated

#### 9.2.1.2.2 Output Capacitor Selection ($C_{OUT}$)

1. In the majority of applications, low ESR (Equivalent Series Resistance) electrolytic capacitors between 82 μF and 220 μF and low ESR solid tantalum capacitors between 15 μF and 100 μF provide the best results. This capacitor must be located close to the IC using short capacitor leads and short copper traces. Do not use capacitors larger than 220 μF.

   For additional information, see *Output Capacitor, $C_{OUT}$*.
2. To simplify the capacitor selection procedure, see Table 4 for quick design component selection. This table contains different input voltages, output voltages, and load currents, and lists various inductors and output capacitors that will provide the best design solutions.

   From Table 4, locate the 5-V output voltage section. In the load current column, choose the load current line that is closest to the current required for the application; for this example, use the 0.5-A line. In the maximum input voltage column, select the line that covers the input voltage required for the application; in this example, use the 15-V line. The rest of this line shows the recommended inductors and capacitors that will provide the best overall performance.

   The capacitor list contains both through-hole electrolytic and surface-mount tantalum capacitors from four different capacitor manufacturers. TI recommends using both the manufacturers and the manufacturer's series that are listed in Table 4.

   In this example aluminum electrolytic capacitors from several different manufacturers are available with the range of ESR numbers required:

   120-μF, 25-V Panasonic HFQ Series

   120-μF, 25-V Nichicon PL Series
3. The capacitor voltage rating for electrolytic capacitors must be at least 1.5 times greater than the output voltage, and often require much higher voltage ratings to satisfy the low ESR requirements for low output ripple voltage.

   For a 5-V output, a capacitor voltage rating at least 7.5 V or more is required. But, in this example, even a low ESR, switching grade, 120-μF, 10-V aluminum electrolytic capacitor would exhibit approximately 400 mΩ of ESR (see Figure 35). This amount of ESR would result in relatively high output ripple voltage. To reduce the ripple to 1% of the output voltage, or less, a capacitor with a higher voltage rating (lower ESR) must be selected. A 16-V or 25-V capacitor will reduce the ripple voltage by approximately half.

#### 9.2.1.2.3 Catch Diode Selection (D1)

1. The catch diode current rating must be at least 1.3 times greater than the maximum load current. Also, if the power supply design must withstand a continuous output short, the diode must have a current rating equal to the maximum current limit of the LM2597. The most stressful condition for this diode is an overload or shorted output condition.

   See Table 1. In this example, a 1-A, 20-V, 1N5817 Schottky diode provides the best performance, and will not be overstressed even for a shorted output.
2. The reverse voltage rating of the diode must be at least 1.25 times the maximum input voltage.
3. This diode must be fast (short reverse recovery time) and must be located close to the LM2597 using short leads and short printed-circuit traces. Because of their fast switching speed and low forward voltage drop, Schottky diodes provide the best performance and efficiency, and must be the first choice, especially in low output voltage applications. Ultra-fast recovery, or high-efficiency rectifiers also provide good results. Ultra-fast recovery diodes typically have reverse recovery times of 50 ns or less. Rectifiers such as the 1N4001 must not be used because they are too slow.

#### 9.2.1.2.4 Input Capacitor ($C_{IN}$)

A low ESR aluminum or tantalum bypass capacitor is required between the input pin and ground to prevent large voltage transients from appearing at the input. In addition, the RMS current rating of the input capacitor must be selected to be at least ½ the DC load current. The capacitor manufacturers data sheet must be checked to assure that this current rating is not exceeded. Figure 34 shows typical RMS current ratings for several different aluminum electrolytic capacitor values.

This capacitor must be located close to the IC using short leads and the voltage rating must be approximately 1.5 times the maximum input voltage.

Copyright © 1998–2016, Texas Instruments Incorporated

If solid tantalum input capacitors are used, TI recommends the capacitors are surge-current tested by the manufacturer.

Exercise caution when using ceramic capacitors for input bypassing, because it may cause severe ringing at the $V_{IN}$ pin.

The important parameters for the Input capacitor are the input voltage rating and the RMS current rating. With a nominal input voltage of 12 V, an aluminum electrolytic capacitor with a voltage rating greater than 18 V (1.5 × $V_{IN}$) is necessary. The next higher capacitor voltage rating is 25 V.

The RMS current rating requirement for the input capacitor in a buck regulator is approximately ½ the DC load current. In this example, with a 400-mA load, a capacitor with a RMS current rating of at least 200 mA is required. Figure 34 shows curves that can be used to select an appropriate input capacitor. From these curves, locate the 25-V line and note which capacitor values have RMS current ratings greater than 200 mA. Either a 47-µF or 68-µF, 25-V capacitor could be used.

For a through-hole design, a 68-µF or 25-V electrolytic capacitor (Panasonic HFQ series or Nichicon PL series or equivalent) would be adequate. Other types or other manufacturers' capacitors can be used provided the RMS ripple current ratings are adequate.

For surface-mount designs, solid tantalum capacitors are recommended. The TPS series available from AVX, and the 593D series from Sprague are both surge current tested.

For additional information, see *Input Capacitor, $C_{IN}$*.

**Table 4. LM2597xx Fixed Voltage Quick Design Component Selection Table**

| CONDITIONS | | | INDUCTOR | | OUTPUT CAPACITOR | | | |
|---|---|---|---|---|---|---|---|---|
| | | | | | THROUGH-HOLE | | SURFACE-MOUNT | |
| VOLTAGE OUTPUT (V) | CURRENT LOAD (A) | VOLTAGE MAX INPUT (V) | INDUCTANCE (µH) | INDUCTOR (#) | PANASONIC HFQ SERIES (µF/V) | NICHICON PL SERIES (µF/V) | AVX TPS SERIES (µF/V) | SPRAGUE 595D SERIES (µF/V) |
| 3.3 | 0.5 | 5 | 33 | L14 | 220/16 | 220/16 | 100/16 | 100/6.3 |
| | | 7 | 47 | L13 | 120/25 | 120/25 | 100/16 | 100/6.3 |
| | | 10 | 68 | L21 | 120/25 | 120/25 | 100/16 | 100/6.3 |
| | | 40 | 100 | L20 | 120/35 | 120/35 | 100/16 | 100/6.3 |
| | 0.2 | 6 | 68 | L4 | 120/25 | 120/25 | 100/16 | 100/6.3 |
| | | 10 | 150 | L10 | 120/16 | 120/16 | 100/16 | 100/6.3 |
| | | 40 | 220 | L9 | 120/16 | 120/16 | 100/16 | 100/6.3 |
| 5 | 0.5 | 8 | 47 | L13 | 180/16 | 180/16 | 100/16 | 33/25 |
| | | 10 | 68 | L21 | 180/16 | 180/16 | 100/16 | 33/25 |
| | | 15 | 100 | L20 | 120/25 | 120/25 | 100/16 | 33/25 |
| | | 40 | 150 | L19 | 120/25 | 120/25 | 100/16 | 33/25 |
| | 0.2 | 9 | 150 | L10 | 82/16 | 82/16 | 100/16 | 33/25 |
| | | 20 | 220 | L9 | 120/16 | 120/16 | 100/16 | 33/25 |
| | | 40 | 330 | L8 | 120/16 | 120/16 | 100/16 | 33/25 |
| 12 | 0.5 | 15 | 68 | L21 | 82/25 | 82/25 | 100/16 | 15/25 |
| | | 18 | 150 | L19 | 82/25 | 82/25 | 100/16 | 15/25 |
| | | 30 | 220 | L27 | 82/25 | 82/25 | 100/16 | 15/25 |
| | | 40 | 330 | L26 | 82/25 | 82/25 | 100/16 | 15/25 |
| | 0.2 | 15 | 100 | L11 | 82/25 | 82/25 | 100/16 | 15/25 |
| | | 20 | 220 | L9 | 82/25 | 82/25 | 100/16 | 15/25 |
| | | 40 | 330 | L17 | 82/25 | 82/25 | 100/16 | 15/25 |


Copyright © 1998–2016, Texas Instruments Incorporated

#### 9.2.1.3 Application Curves

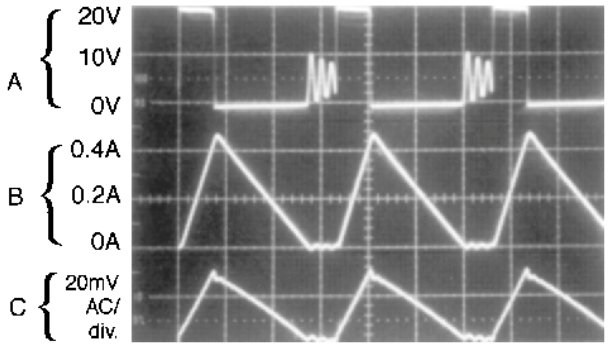


Discontinuous mode switching waveforms
$V_{IN}$ = 20 V, $V_{OUT}$ = 5 V, $I_{LOAD}$ = 200 mA
L = 33 µH, $C_{OUT}$ = 220 µF, $C_{OUT}$ ESR = 60 mΩ
A: Output pin voltage, 10 V/div.
B: Inductor current, 0.2 A/div.
C: Output ripple voltage, 20 mV/div.

**Figure 44. Horizontal Time Base: 2 µs/div**

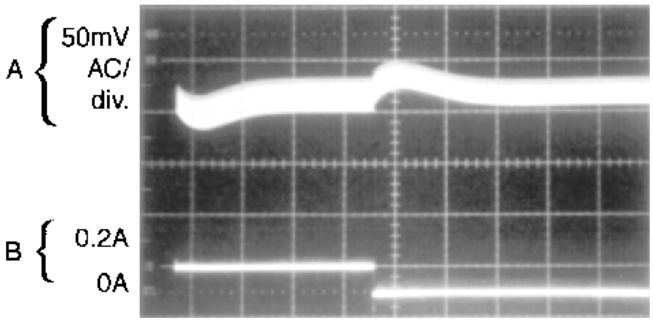


Load transient response for discontinuous mode
$V_{IN}$ = 20 V, $V_{OUT}$ = 5 V, $I_{LOAD}$ = 100 mA to 200 mA
L = 33 µH, $C_{OUT}$ = 220 µF, $C_{OUT}$ ESR = 60 mΩ
A: Output voltage, 50 mV/div. (AC)
B: 100-mA to 200-mA load pulse

**Figure 45. Horizontal Time Base: 200 µs/div**

### 9.2.2 Series Buck Regulator (Adjustable Output)

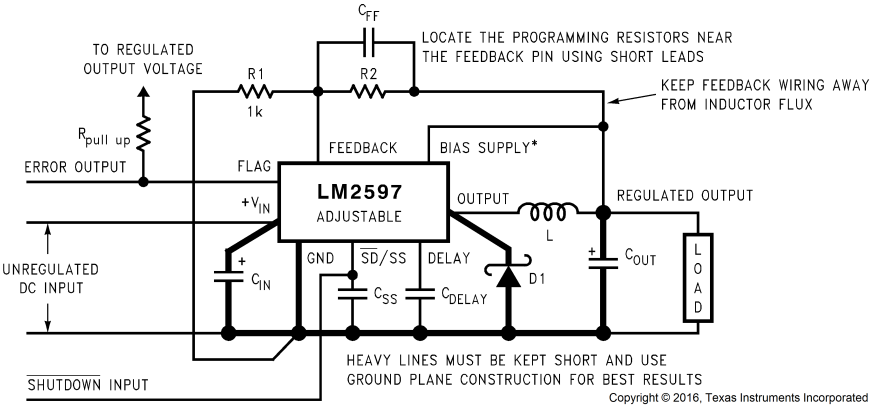


$V_{OUT} = V_{REF}\left(1 + \frac{R_2}{R_1}\right)$ where $V_{REF} = 1.23V$ $R_2 = R_1\left(\frac{V_{OUT}}{V_{REF}} - 1\right)$ Select $R_1$ to be approximately 1 kΩ, use a 1% resistor for best stability.

Component values shown are for $V_{IN}$ = 20 V,
$V_{OUT}$ = 10 V, $I_{LOAD}$ = 500 mA.
$C_{IN}$ – 68-µF, 35-V Aluminum Electrolytic, Nichicon *PL Series*
$C_{OUT}$ – 120-µF, 25-V Aluminum Electrolytic, Nichicon *PL Series*
D1 – –1-A, 0-V Schottky Rectifier, 1N5818
L1 – 150-µH, L19
$R_1$ – 1 kΩ, 1%
$R_2$ – 7.15k, 1%
$C_{FF}$ – 3.3 nF
*Typical Values*
$C_{SS}$ – 0.1 µF
$C_{DELAY}$ – 0.1 µF
$R_{PULL\ UP}$ – 4.7k
*For output voltages between 4 V and 20 V

**Figure 46. Adjustable Output Voltage Versions**

Copyright © 1998–2016, Texas Instruments Incorporated

#### 9.2.2.1 Design Requirements

Table 5 lists the design parameters for this application example.

**Table 5. Design Parameters**

| PARAMETER | EXAMPLE VALUE |
|---|---|
| Regulated output voltage, $V_{OUT}$ | 20 V |
| Maximum input voltage, $V_{IN}$(max) | 28 V |
| Maximum load current, $I_{LOAD}$(max) | 0.5 A |
| Switching frequency, F | Fixed at a nominal 150 kHz |

#### 9.2.2.2 Detailed Design Procedure

##### 9.2.2.2.1 Programming Output Voltage

Select $R_1$ and $R_2$, as shown in Figure 46.

Use Equation 1 to select the appropriate resistor values.

$$V_{OUT} = V_{REF}\left(1 + \frac{R_2}{R_1}\right) \quad \text{where } V_{REF} = 1.23V \tag{1}$$

Select $R_1$ with Equation 2 to be 1 kΩ, 1%. Solve for $R_2$.

$$R_2 = R_1\left(\frac{V_{OUT}}{V_{REF}} - 1\right) = 1k\left(\frac{20V}{1.23V} - 1\right) \tag{2}$$

Select a value for $R_1$ with Equation 3 between 240 Ω and 1.5 kΩ. The lower resistor values minimize noise pickup in the sensitive feedback pin. (For the lowest temperature coefficient and the best stability with time, use 1% metal film resistors.)

$$R_2 = R_1\left(\frac{V_{OUT}}{V_{REF}} - 1\right) \tag{3}$$

$R_2$ = 1k (16.26 − 1) = 15.26k, closest 1% value is 15.4 kΩ.

$R_2$ = 15.4 kΩ.

##### 9.2.2.2.2 Inductor Selection (L1)

1. Calculate the inductor Volt microsecond constant E • T (V • μs) with Equation 4.

$$E \bullet T = (V_{IN} - V_{OUT} - V_{SAT}) \bullet \frac{V_{OUT} + V_D}{V_{IN} - V_{SAT} + V_D} \bullet \frac{1000}{150} (V \bullet \mu s) \tag{4}$$

   where
   - $V_{SAT}$ = internal switch saturation voltage = 0.9 V
   - $V_D$ = diode forward voltage drop = 0.5 V

   Calculate the inductor Volt • microsecond constant (E • T) with Equation 5.

$$E \bullet T = (28 - 20 - 0.9) \bullet \frac{20 + 0.5}{28 - 0.9 + 0.5} \bullet \frac{1000}{150} (V \bullet \mu s)$$

$$E \bullet T = (7.1) \bullet \frac{20.5}{27.6} \bullet 6.67 (V \bullet \mu s) = 35.2 (V \bullet \mu s) \tag{5}$$

2. Use the E • T value from the previous formula and match it with the E • T number on the vertical axis of the Inductor Value Selection Guide shown in Figure 41.

   E • T = 35.2 (V • μs)

3. On the horizontal axis, select the maximum load current.

   $I_{LOAD}$(max) = 0.5 A

4. Identify the inductance region intersected by the E • T value and the Maximum Load Current value. Each region is identified by an inductance value and an inductor code (LXX).

   From the inductor value selection guide shown in Figure 41, the inductance region intersected by the 35 (V • μs) horizontal line and the 0.5A vertical line is 150 μH, and the inductor code is L19.


Copyright © 1998–2016, Texas Instruments Incorporated

5. Select an appropriate inductor from the four manufacturer's part numbers listed in Table 2.

   From Table 2, locate line L19, and select an inductor part number from the list of manufacturers' part numbers.

#### 9.2.2.2.3 Output Capacitor Selection ($C_{OUT}$)

1. In the majority of applications, low ESR electrolytic or solid tantalum capacitors between 82 µF and 220 µF provide the best results. This capacitor must be located close to the IC using short capacitor leads and short copper traces. Do not use capacitors larger than 220 µF. For additional information, see *Output Capacitor, $C_{OUT}$*.
2. To simplify the capacitor selection procedure, see Table 6 for a quick design guide. This table contains different output voltages, and lists various output capacitors that will provide the best design solutions.

   From Table 6, locate the output voltage column. From that column, locate the output voltage closest to the output voltage in your application. In this example, select the 24-V line. In *Output Capacitor, $C_{OUT}$*, select a capacitor from the list of through hole electrolytic or surface mount tantalum types from four different capacitor manufacturers. TI recommends that both the manufacturers and the manufacturers series that are listed in Table 6 be used.

   In this example, through-hole aluminum electrolytic capacitors from several different manufacturers are available.

   82-µF, 50-V Panasonic HFQ Series

   120-µF, 50-V Nichicon PL Series
3. The capacitor voltage rating must be at least 1.5 times greater than the output voltage, and often much higher voltage ratings are required to satisfy the low ESR requirements required for low-output ripple voltage.

   For a 20-V output, a capacitor rating of at least 30 V or more is required. In this example, either a 35-V or 50-V capacitor would work. A 50-V rating was chosen because it has a lower ESR which provides a lower output ripple voltage.

   Other manufacturers or other types of capacitors may also be used, provided the capacitor specifications (especially the 100-kHz ESR) closely match the types listed in Table 6. Refer to the capacitor manufacturers' data sheet for this information.

#### 9.2.2.2.4 Feedforward Capacitor ($C_{FF}$)

For output voltages greater than approximately 10 V, an additional capacitor is required. The compensation capacitor is typically between 50 pF and 10 nF, and is wired in parallel with the output voltage setting resistor, $R_2$. It provides additional stability for high output voltages, low input or output voltages, or very low ESR output capacitors, such as solid tantalum capacitors calculated with Equation 6 (see Figure 46).

$$C_{FF} = \frac{1}{31 \times 10^3 \times R_2} \tag{6}$$

This capacitor type can be ceramic, plastic, silver mica, and so forth (because of the unstable characteristics of ceramic capacitors made with Z5U material are not recommended.)

Table 6 contains feedforward capacitor values for various output voltages. In this example, a 1-nF capacitor is required.

#### 9.2.2.2.5 Catch Diode Selection (D1)

1. The catch diode current rating must be at least 1.3 times greater than the maximum load current. Also, if the power supply design must withstand a continuous output short, the diode must have a current rating equal to the maximum current limit of the LM2597. The most stressful condition for this diode is an overload or shorted output condition.

   Schottky diodes provide the best performance, and in this example a 1-A, 40-V, 1N5819 Schottky diode is a good choice. The 1-A diode rating is more than adequate and will not be overstressed even for a shorted output (see Table 1).
2. The reverse voltage rating of the diode must be at least 1.25 times the maximum input voltage.
3. This diode must be fast (short reverse recovery time) and must be placed close to the LM2597 using short leads and short-printed circuit traces. Because of their fast switching speed and low forward voltage drop,

Copyright © 1998–2016, Texas Instruments Incorporated

Schottky diodes provide the best performance and efficiency, and must be the first choice, especially in low output voltage applications. Ultra-fast recovery or high-efficiency rectifiers are also good choices, but some types with an abrupt turnoff characteristic may cause instability or EMI problems. Ultra-fast recovery diodes typically have reverse recovery times of 50 ns or less. Rectifiers such as the 1N4001 series must not be used because they are too slow.

#### 9.2.2.2.6 Input Capacitor ($C_{IN}$)

A low-ESR aluminum or tantalum bypass capacitor is required between the input pin and ground to prevent large voltage transients from appearing at the input. In addition, the RMS current rating of the input capacitor must be selected to be at least ½ the DC load current. The capacitor manufacturers data sheet must be checked to assure that this current rating is not exceeded. Figure 34 shows typical RMS current ratings for several different aluminum electrolytic capacitor values.

This capacitor must be located close to the IC using short leads and the voltage rating must be approximately 1.5 times the maximum input voltage.

If solid tantalum input capacitors are used, TI recommend the capacitors are surge-current tested by the manufacturer.

**CAUTION**

Use caution when using ceramic capacitors for input bypassing, because it may cause severe ringing at the $V_{IN}$ pin.

The important parameters for the input capacitor are the input voltage rating and the RMS current rating. With a nominal input voltage of 28 V, an aluminum electrolytic aluminum electrolytic capacitor with a voltage rating greater than 42 V (1.5 × $V_{IN}$) is required. Because the next higher capacitor voltage rating is 50 V, a 50-V capacitor must be used. The capacitor voltage rating of (1.5 × $V_{IN}$) is a conservative guideline, and can be modified somewhat if desired.

The RMS current rating requirement for the input capacitor of a buck regulator is approximately ½ the DC load current. In this example, with a 400-mA load, a capacitor with a RMS current rating of at least 200 mA is required.

Figure 34 shows curves that can be used to select an appropriate input capacitor. From the curves, locate the 50-V line and note which capacitor values have RMS current ratings greater than 200 mA. A 47-µF, 50-V, low-ESR electrolytic capacitor is required.

For a through hole design, a 47-µF, 50-V electrolytic capacitor (Panasonic HFQ series or Nichicon PL series or equivalent) would be adequate. Other types or other manufacturers' capacitors can be used provided the RMS ripple current ratings are adequate.

For surface-mount designs, solid tantalum capacitors are recommended. The TPS series available from AVX, and the 593D series from Sprague are both surge current tested.

For additional information, see *Input Capacitor, $C_{IN}$*.

**Table 6. Output Capacitor and Feedforward Capacitor Selection Table**

| OUTPUT VOLTAGE (V) | THROUGH-HOLE OUTPUT CAPACITOR | | | SURFACE-MOUNT OUTPUT CAPACITOR | | |
|---|---|---|---|---|---|---|
| | PANASONIC | NICHICON PL | FEEDFORWARD | AVX TPS | SPRAGUE | FEEDFORWARD |
| | HFQ SERIES (µF/V) | SERIES (µF/V) | CAPACITOR | SERIES (µF/V) | 595D SERIES (µF/V) | CAPACITOR |
| 1.2 | 220/25 | 220/25 | 0 | 220/10 | 220/10 | 0 |
| 4 | 180/25 | 180/25 | 4.7 nF | 100/10 | 120/10 | 4.7 nF |
| 6 | 82/25 | 82/25 | 4.7 nF | 100/10 | 120/10 | 4.7 nF |
| 9 | 82/25 | 82/25 | 3.3 nF | 100/16 | 100/16 | 3.3 nF |
| 12 | 82/25 | 82/25 | 2.2 nF | 100/16 | 100/16 | 2.2 nF |
| 15 | 82/25 | 82/25 | 1.5 nF | 68/20 | 100/20 | 1.5 nF |
| 24 | 82/50 | 120/50 | 1 nF | 10/35 | 15/35 | 220 pF |


Copyright © 1998–2016, Texas Instruments Incorporated

**Table 6. Output Capacitor and Feedforward Capacitor Selection Table (continued)**

| OUTPUT VOLTAGE (V) | THROUGH-HOLE OUTPUT CAPACITOR | | | SURFACE-MOUNT OUTPUT CAPACITOR | | |
|---|---|---|---|---|---|---|
| | PANASONIC | NICHICON PL | FEEDFORWARD | AVX TPS | SPRAGUE | FEEDFORWARD |
| | HFQ SERIES (μF/V) | SERIES (μF/V) | CAPACITOR | SERIES (μF/V) | 595D SERIES (μF/V) | CAPACITOR |
| 28 | 82/50 | 120/50 | 820 pF | 10/35 | 15/35 | 220 pF |

#### *9.2.2.3 Application Curves*

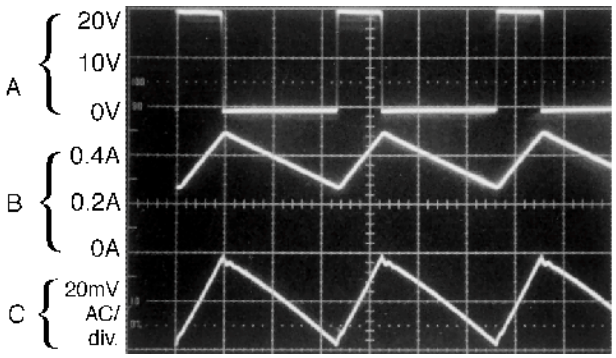


Continuous mode switching waveforms
$V_{IN}$ = 20 V, $V_{OUT}$ = 5 V, $I_{LOAD}$ = 400 mA
L = 100 μH, $C_{OUT}$ = 120 μF, $C_{OUT}$ ESR = 140 mΩ
A: Output pin voltage, 10 V/div.
B: Inductor current, 0.2 A/div.
C: Output ripple voltage, 20 mV/div.

**Figure 47. Horizontal Time Base: 2 μs/div**

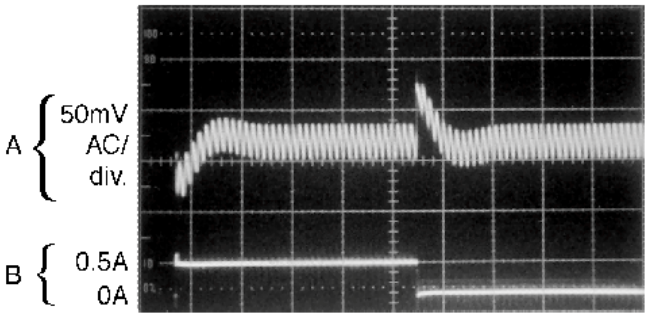


Load transient response for continuous mode
$V_{IN}$ = 20 V, $V_{OUT}$ = 5 V, $I_{LOAD}$ = 200 mA to 500 mA
L = 100 μH, $C_{OUT}$ = 120 μF, $C_{OUT}$ ESR = 140 mΩ
A: Output voltage, 50 mV/div. (AC)
B: 200-mA to 500-mA load pulse

**Figure 48. Horizontal Time Base: 50 μs/div**

## 10 Power Supply Recommendations

The LM2597 is designed to operate from an input voltage supply up to 45 V and 60 V (HV version). This input supply must be well regulated and able to withstand maximum input current and maintain a stable voltage.

## 11 Layout

### 11.1 Layout Guidelines

As in any switching regulator, layout is very important. Rapidly switching currents associated with wiring inductance can generate voltage transients which can cause problems. For minimal inductance and ground loops, the wires indicated by heavy lines must be wide printed-circuit traces and must be kept as short as possible. For best results, external components must be placed as close to the switcher lC as possible using ground plane construction or single point grounding.

If open core inductors are used, take care of the location and positioning of this type of inductor. Allowing the inductor flux to intersect sensitive feedback, IC groundpath and $C_{OUT}$ wiring can cause problems.

When using the adjustable version, take special care regarding the location of the feedback resistors and the associated wiring. Physically place both resistors near the IC, and route the wiring away from the inductor, especially an open core type of inductor.

Copyright © 1998–2016, Texas Instruments Incorporated

## 11.2 Layout Example

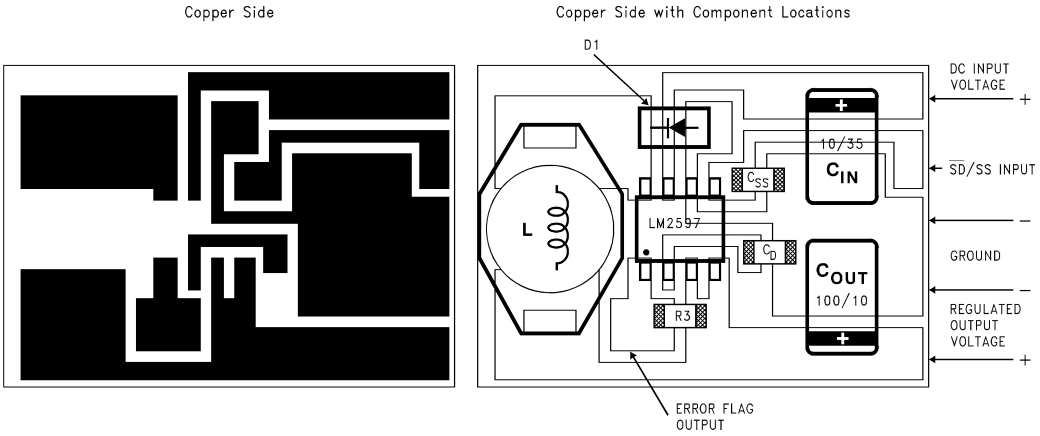


$C_{IN}$ – 10-µF, 35-V solid tantalum, AVX, *TPS Series* (surface-mount, *D* size)
$C_{OUT}$ – 100-µF, 10-V solid tantalum, AVX, *TPS Series* (surface-mount, *D* size)
D1 – 1-A, 40-V surface-mount, Schottky rectifier
L1 – Surface-mount inductor, Coilcraft DO33
$C_{SS}$ – Soft-start capacitor (surface-mount, ceramic chip capacitor)
$C_D$ – Delay capacitor (surface-mount, ceramic chip capacitor)
R3 – Error flag pullup resistor (surface-mount, chip resistor)

**Figure 49. Typical Surface-Mount PCB Layout, Fixed Output (2X Size)**

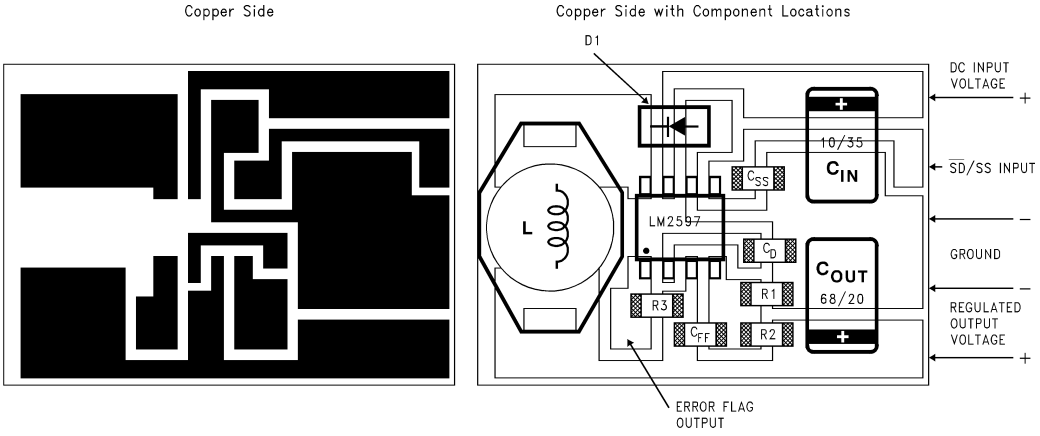


$C_{IN}$ – 10-µF, 35-V solid tantalum, AVX, *TPS Series* (surface-mount, *D* size)
$C_{OUT}$ – 68-µF, 20-V solid tantalum, AVX, *TPS Series* (surface-mount, *D* size)
D1 – 1-A, 40-V Surface-mount, Schottky rectifier
L1 – Surface-mount inductor, Coilcraft DO33
$C_{SS}$ – Soft-start capacitor (surface-mount, ceramic chip capacitor)
$C_D$ – Delay capacitor (surface-mount, ceramic chip capacitor)
CFF – Feedforward capacitor (surface-mount, ceramic chip capacitor)
R1 – Output voltage program resistor (surface-mount, chip resistor)
R2 – Output voltage program resistor (surface-mount, chip resistor)
R3 – Error flag pullup resistor (surface-mount, chip resistor)

**Figure 50. Typical Surface-Mount PCB Layout, Adjustable Output (2X Size)**


Copyright © 1998–2016, Texas Instruments Incorporated

## 11.3 Thermal Considerations

The LM2597xx is available in two packages: an 8-pin through-hole PDIP (P) and an 8-pin surface-mount SOIC (D).Both packages are molded plastic with a copper lead frame. When the package is soldered to the PCB, the copper and the board are the heat sink for the LM2597 and the other heat producing components.

For best thermal performance, wide copper traces must be used. Pins must be soldered to generous amounts of printed-circuit board (PCB) copper, (one exception to this is the output (switch) pin, which must not have large areas of copper). Large areas of copper provide the best transfer of heat (lower thermal resistance) to the surrounding air, and even double-sided or multilayer boards provide a better heat path to the surrounding air. Unless power levels are small, sockets are not recommended because of the added thermal resistance it adds and the resultant higher junction temperatures.

Package thermal resistance and junction temperature rise numbers are all approximate, and there are many factors that will affect the junction temperature. Some of these factors include board size, shape, thickness, position, location, and even board temperature. Other factors are trace width, printed-circuit copper area, copper thickness, single- or double-sided multilayer board, and the amount of solder on the board. The effectiveness of the PCB to dissipate heat also depends on the size, quantity, and spacing of other components on the board. Furthermore, some of these components such as the catch diode will add heat to the PCB and the heat can vary as the input voltage changes. For the inductor, depending on the physical size, type of core material, and the DC resistance, it could either act as a heat sink taking heat away from the board, or it could add heat to the board.

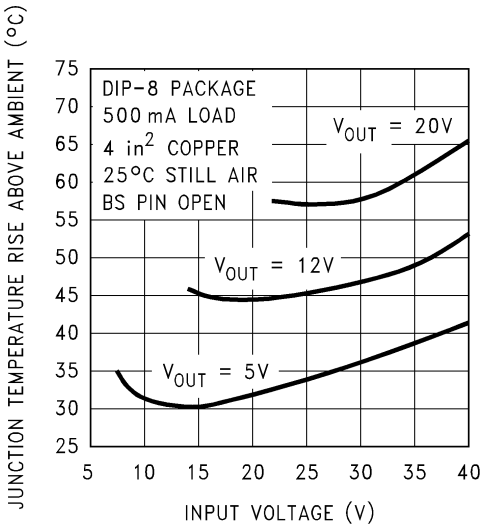


Circuit Data for Temperature Rise Curve

| | |
|---|---|
| Capacitors | Through hole electrolytic |
| Inductor | Through hole, Schott, 100 μH |
| Diode | Through hole, 1-A, 40-V, Schottky |
| PCB | 4 square inches single sided 2 oz. copper (0.0028″) |

**Figure 51. Junction Temperature Rise, 8-Pin PDIP**

Copyright © 1998–2016, Texas Instruments Incorporated

## Thermal Considerations (continued)

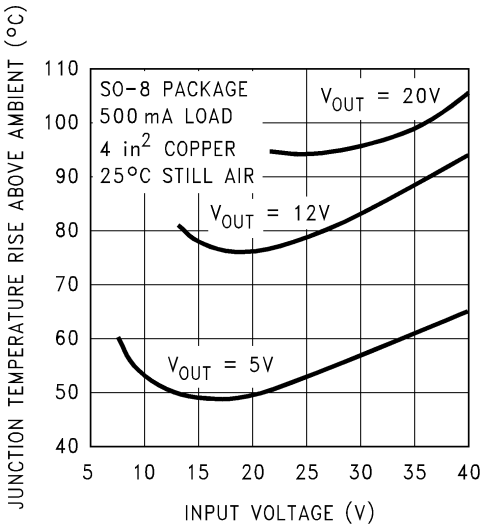


Circuit Data for Temperature Rise Curve (Surface Mount)

| | |
|---|---|
| Capacitors | Through hole electrolytic |
| Inductor | Through hole, Schott, 100 μH |
| Diode | Through hole, 1-A, 40-V, Schottky |
| PCB | 4 square inches single sided 2 oz. copper (0.0028″) |

**Figure 52. Junction Temperature Rise, 8-Pin SOIC**

Figure 51 and Figure 52 show the LM2597 junction temperature rise above ambient temperature with a 500-mA load for various input and output voltages. The Bias Supply pin was not used (left open) for these curves. Connecting the Bias Supply pin to the output voltage would reduce the junction temperature by approximately 5°C to 15°C, depending on the input and output voltages, and the load current. This data was taken with the circuit operating as a buck switcher with all components mounted on a PCB to simulate the junction temperature under actual operating conditions. This curve is typical, and can be used for a quick check on the maximum junction temperature for various conditions, but keep in mind that there are many factors that can affect the junction temperature.


Copyright © 1998–2016, Texas Instruments Incorporated

# 12 デバイスおよびドキュメントのサポート

## 12.1 関連リンク

次の表に、クイック・アクセス・リンクを示します。カテゴリには、技術資料、サポートおよびコミュニティ・リソース、ツールとソフトウェア、およびサンプル注文またはご購入へのクイック・アクセスが含まれます。

**表 7. 関連リンク**

| 製品 | プロダクト・フォルダ | サンプルとご購入 | 技術資料 | ツールとソフトウェア | サポートとコミュニティ |
|---|---|---|---|---|---|
| LM2597 | ここをクリック | ここをクリック | ここをクリック | ここをクリック | ここをクリック |
| LM2597HV | ここをクリック | ここをクリック | ここをクリック | ここをクリック | ここをクリック |

## 12.2 コミュニティ・リソース

The following links connect to TI community resources. Linked contents are provided "AS IS" by the respective contributors. They do not constitute TI specifications and do not necessarily reflect TI's views; see TI's Terms of Use.

**TI E2E™ Online Community** ***TI's Engineer-to-Engineer (E2E) Community.*** Created to foster collaboration among engineers. At e2e.ti.com, you can ask questions, share knowledge, explore ideas and help solve problems with fellow engineers.

**Design Support** ***TI's Design Support*** Quickly find helpful E2E forums along with design support tools and contact information for technical support.

## 12.3 商標

E2E is a trademark of Texas Instruments.
SIMPLE SWITCHER is a registered trademark of Texas Instruments.
All other trademarks are the property of their respective owners.

## 12.4 静電気放電に関する注意事項



これらのデバイスは、限定的なESD（静電破壊）保護機能を内 蔵しています。保存時または取り扱い時は、MOSゲートに対す る静電破壊を防止するために、リード線同士をショートさせて おくか、デバイスを導電フォームに入れる必要があります。

## 12.5 Glossary

SLYZ022 — *TI Glossary*.

This glossary lists and explains terms, acronyms, and definitions.

# 13 メカニカル、パッケージ、および注文情報

以降のページには、メカニカル、パッケージ、および注文に関する情報が記載されています。これらの情報は、指定のデバイスに対して提供されている最新のデータです。このデータは予告なく変更されることがあり、ドキュメントが改訂される場合もあります。本データシートのブラウザ版を使用されている場合は、画面左側の説明をご覧ください。

Copyright © 1998–2016, Texas Instruments Incorporated

## PACKAGING INFORMATION

| Orderable part number | Status (1) | Material type (2) | Package \| Pins | Package qty \| Carrier | RoHS (3) | Lead finish/ Ball material (4) | MSL rating/ Peak reflow (5) | Op temp (°C) | Part marking (6) |
|---|---|---|---|---|---|---|---|---|---|
| LM2597HVM-12/NOPB | Active | Production | SOIC (D) \| 8 | 95 \| TUBE | Yes | Call TI \| Sn | Level-1-260C-UNLIM | -40 to 125 | 2597H M-12 |
| LM2597HVM-12/NOPB.B | Active | Production | SOIC (D) \| 8 | 95 \| TUBE | Yes | Call TI | Level-1-260C-UNLIM | -40 to 125 | 2597H M-12 |
| LM2597HVM-3.3/NOPB | Active | Production | SOIC (D) \| 8 | 95 \| TUBE | Yes | SN | Level-1-260C-UNLIM | -40 to 125 | 2597H M-3.3 |
| LM2597HVM-3.3/NOPB.B | Active | Production | SOIC (D) \| 8 | 95 \| TUBE | Yes | SN | Level-1-260C-UNLIM | -40 to 125 | 2597H M-3.3 |
| LM2597HVM-5.0/NOPB | Active | Production | SOIC (D) \| 8 | 95 \| TUBE | Yes | SN | Level-1-260C-UNLIM | -40 to 125 | 2597H M-5.0 |
| LM2597HVM-5.0/NOPB.B | Active | Production | SOIC (D) \| 8 | 95 \| TUBE | Yes | SN | Level-1-260C-UNLIM | -40 to 125 | 2597H M-5.0 |
| LM2597HVM-ADJ/NOPB | Active | Production | SOIC (D) \| 8 | 95 \| TUBE | Yes | SN | Level-1-260C-UNLIM | -40 to 125 | 2597H M-ADJ |
| LM2597HVM-ADJ/NOPB.B | Active | Production | SOIC (D) \| 8 | 95 \| TUBE | Yes | SN | Level-1-260C-UNLIM | -40 to 125 | 2597H M-ADJ |
| LM2597HVMX-12/NOPB | Active | Production | SOIC (D) \| 8 | 2500 \| LARGE T&R | Yes | SN | Level-1-260C-UNLIM | -40 to 125 | 2597H M-12 |
| LM2597HVMX-12/NOPB.B | Active | Production | SOIC (D) \| 8 | 2500 \| LARGE T&R | Yes | SN | Level-1-260C-UNLIM | -40 to 125 | 2597H M-12 |
| LM2597HVMX-3.3/NOPB | Active | Production | SOIC (D) \| 8 | 2500 \| LARGE T&R | Yes | SN | Level-1-260C-UNLIM | -40 to 125 | 2597H M-3.3 |
| LM2597HVMX-5.0/NOPB | Active | Production | SOIC (D) \| 8 | 2500 \| LARGE T&R | Yes | SN | Level-1-260C-UNLIM | -40 to 125 | 2597H M-5.0 |
| LM2597HVMX-ADJ/NOPB | Active | Production | SOIC (D) \| 8 | 2500 \| LARGE T&R | Yes | SN | Level-1-260C-UNLIM | -40 to 125 | 2597H M-ADJ |
| LM2597HVN-12/NOPB | Active | Production | PDIP (P) \| 8 | 40 \| TUBE | Yes | NIPDAU | Level-1-NA-UNLIM | -40 to 125 | LM2597HV N-12 P+ |
| LM2597HVN-12/NOPB.B | Active | Production | PDIP (P) \| 8 | 40 \| TUBE | Yes | NIPDAU | Level-1-NA-UNLIM | -40 to 125 | LM2597HV N-12 P+ |
| LM2597HVN-3.3/NOPB | Active | Production | PDIP (P) \| 8 | 40 \| TUBE | Yes | Call TI \| Nipdau | Level-1-NA-UNLIM | -40 to 125 | LM2597HV N-3.3 P+ |

| Orderable part number | Status (1) | Material type (2) | Package \| Pins | Package qty \| Carrier | RoHS (3) | Lead finish/ Ball material (4) | MSL rating/ Peak reflow (5) | Op temp (°C) | Part marking (6) |
|---|---|---|---|---|---|---|---|---|---|
| LM2597HVN-3.3/NOPB.B | Active | Production | PDIP (P) \| 8 | 40 \| TUBE | Yes | NIPDAU | Level-1-NA-UNLIM | -40 to 125 | LM2597HV N-3.3 P+ |
| LM2597HVN-5.0/NOPB | Active | Production | PDIP (P) \| 8 | 40 \| TUBE | Yes | Call TI \| Nipdau | Level-1-NA-UNLIM | -40 to 125 | LM2597HV N-5.0 P+ |
| LM2597HVN-5.0/NOPB.B | Active | Production | PDIP (P) \| 8 | 40 \| TUBE | Yes | NIPDAU | Level-1-NA-UNLIM | -40 to 125 | LM2597HV N-5.0 P+ |
| LM2597HVN-ADJ/NOPB | Active | Production | PDIP (P) \| 8 | 40 \| TUBE | Yes | Call TI \| Nipdau | Level-1-NA-UNLIM | -40 to 125 | LM2597HV N-ADJ P+ |
| LM2597HVN-ADJ/NOPB.B | Active | Production | PDIP (P) \| 8 | 40 \| TUBE | Yes | NIPDAU | Level-1-NA-UNLIM | -40 to 125 | LM2597HV N-ADJ P+ |
| LM2597M-12/NOPB | Active | Production | SOIC (D) \| 8 | 95 \| TUBE | Yes | SN | Level-1-260C-UNLIM | -40 to 125 | 2597 M-12 |
| LM2597M-12/NOPB.B | Active | Production | SOIC (D) \| 8 | 95 \| TUBE | Yes | SN | Level-1-260C-UNLIM | -40 to 125 | 2597 M-12 |
| LM2597M-3.3/NOPB | Active | Production | SOIC (D) \| 8 | 95 \| TUBE | Yes | SN | Level-1-260C-UNLIM | -40 to 125 | 2597 M-3.3 |
| LM2597M-3.3/NOPB.B | Active | Production | SOIC (D) \| 8 | 95 \| TUBE | Yes | SN | Level-1-260C-UNLIM | -40 to 125 | 2597 M-3.3 |
| LM2597M-5.0/NOPB | Active | Production | SOIC (D) \| 8 | 95 \| TUBE | Yes | SN | Level-1-260C-UNLIM | -40 to 125 | 2597 M-5.0 |
| LM2597M-5.0/NOPB.B | Active | Production | SOIC (D) \| 8 | 95 \| TUBE | Yes | SN | Level-1-260C-UNLIM | -40 to 125 | 2597 M-5.0 |
| LM2597M-ADJ/NOPB | Active | Production | SOIC (D) \| 8 | 95 \| TUBE | Yes | SN | Level-1-260C-UNLIM | -40 to 125 | 2597 M-ADJ |
| LM2597M-ADJ/NOPB.B | Active | Production | SOIC (D) \| 8 | 95 \| TUBE | Yes | SN | Level-1-260C-UNLIM | -40 to 125 | 2597 M-ADJ |
| LM2597MX-12/NOPB | Active | Production | SOIC (D) \| 8 | 2500 \| LARGE T&R | Yes | SN | Level-1-260C-UNLIM | -40 to 125 | 2597 M-12 |
| LM2597MX-12/NOPB.B | Active | Production | SOIC (D) \| 8 | 2500 \| LARGE T&R | Yes | SN | Level-1-260C-UNLIM | -40 to 125 | 2597 M-12 |
| LM2597MX-3.3/NOPB | Active | Production | SOIC (D) \| 8 | 2500 \| LARGE T&R | Yes | SN | Level-1-260C-UNLIM | -40 to 125 | 2597 M-3.3 |
| LM2597MX-3.3/NOPB.B | Active | Production | SOIC (D) \| 8 | 2500 \| LARGE T&R | Yes | SN | Level-1-260C-UNLIM | -40 to 125 | 2597 M-3.3 |

| Orderable part number | Status (1) | Material type (2) | Package \| Pins | Package qty \| Carrier | RoHS (3) | Lead finish/ Ball material (4) | MSL rating/ Peak reflow (5) | Op temp (°C) | Part marking (6) |
|---|---|---|---|---|---|---|---|---|---|
| LM2597MX-5.0/NOPB | Active | Production | SOIC (D) \| 8 | 2500 \| LARGE T&R | Yes | SN | Level-1-260C-UNLIM | -40 to 125 | 2597 M-5.0 |
| LM2597MX-5.0/NOPB.B | Active | Production | SOIC (D) \| 8 | 2500 \| LARGE T&R | Yes | SN | Level-1-260C-UNLIM | -40 to 125 | 2597 M-5.0 |
| LM2597MX-ADJ/NOPB | Active | Production | SOIC (D) \| 8 | 2500 \| LARGE T&R | Yes | SN | Level-1-260C-UNLIM | -40 to 125 | 2597 M-ADJ |
| LM2597MX-ADJ/NOPB.B | Active | Production | SOIC (D) \| 8 | 2500 \| LARGE T&R | Yes | SN | Level-1-260C-UNLIM | -40 to 125 | 2597 M-ADJ |
| LM2597N-12/NOPB | Active | Production | PDIP (P) \| 8 | 40 \| TUBE | Yes | NIPDAU | Level-1-NA-UNLIM | -40 to 125 | LM2597N -12 P+ |
| LM2597N-12/NOPB.B | Active | Production | PDIP (P) \| 8 | 40 \| TUBE | Yes | NIPDAU | Level-1-NA-UNLIM | -40 to 125 | LM2597N -12 P+ |
| LM2597N-3.3/NOPB | Active | Production | PDIP (P) \| 8 | 40 \| TUBE | Yes | NIPDAU | Level-1-NA-UNLIM | -40 to 125 | LM2597N -3.3 P+ |
| LM2597N-3.3/NOPB.B | Active | Production | PDIP (P) \| 8 | 40 \| TUBE | Yes | NIPDAU | Level-1-NA-UNLIM | -40 to 125 | LM2597N -3.3 P+ |
| LM2597N-5.0/NOPB | Active | Production | PDIP (P) \| 8 | 40 \| TUBE | Yes | NIPDAU | Level-1-NA-UNLIM | -40 to 125 | LM2597N -5.0 P+ |
| LM2597N-5.0/NOPB.B | Active | Production | PDIP (P) \| 8 | 40 \| TUBE | Yes | NIPDAU | Level-1-NA-UNLIM | -40 to 125 | LM2597N -5.0 P+ |
| LM2597N-ADJ/NOPB | Active | Production | PDIP (P) \| 8 | 40 \| TUBE | Yes | NIPDAU | Level-1-NA-UNLIM | -40 to 125 | LM2597N -ADJ P+ |
| LM2597N-ADJ/NOPB.B | Active | Production | PDIP (P) \| 8 | 40 \| TUBE | Yes | NIPDAU | Level-1-NA-UNLIM | -40 to 125 | LM2597N -ADJ P+ |

(1) **Status:** For more details on status, see our product life cycle.

(2) **Material type:** When designated, preproduction parts are prototypes/experimental devices, and are not yet approved or released for full production. Testing and final process, including without limitation quality assurance, reliability performance testing, and/or process qualification, may not yet be complete, and this item is subject to further changes or possible discontinuation. If available for ordering, purchases will be subject to an additional waiver at checkout, and are intended for early internal evaluation purposes only. These items are sold without warranties of any kind.

(3) **RoHS values:** Yes, No, RoHS Exempt. See the TI RoHS Statement for additional information and value definition.

(4) **Lead finish/Ball material:** Parts may have multiple material finish options. Finish options are separated by a vertical ruled line. Lead finish/Ball material values may wrap to two lines if the finish value exceeds the maximum column width.

(5) **MSL rating/Peak reflow:** The moisture sensitivity level ratings and peak solder (reflow) temperatures. In the event that a part has multiple moisture sensitivity ratings, only the lowest level per JEDEC standards is shown. Refer to the shipping label for the actual reflow temperature that will be used to mount the part to the printed circuit board.

(6) **Part marking:** There may be an additional marking, which relates to the logo, the lot trace code information, or the environmental category of the part.

Multiple part markings will be inside parentheses. Only one part marking contained in parentheses and separated by a "~" will appear on a part. If a line is indented then it is a continuation of the previous line and the two combined represent the entire part marking for that device.

**Important Information and Disclaimer:**The information provided on this page represents TI's knowledge and belief as of the date that it is provided. TI bases its knowledge and belief on information provided by third parties, and makes no representation or warranty as to the accuracy of such information. Efforts are underway to better integrate information from third parties. TI has taken and continues to take reasonable steps to provide representative and accurate information but may not have conducted destructive testing or chemical analysis on incoming materials and chemicals. TI and TI suppliers consider certain information to be proprietary, and thus CAS numbers and other limited information may not be available for release.

In no event shall TI's liability arising out of such information exceed the total purchase price of the TI part(s) at issue in this document sold by TI to Customer on an annual basis.

## TAPE AND REEL INFORMATION

**REEL DIMENSIONS**

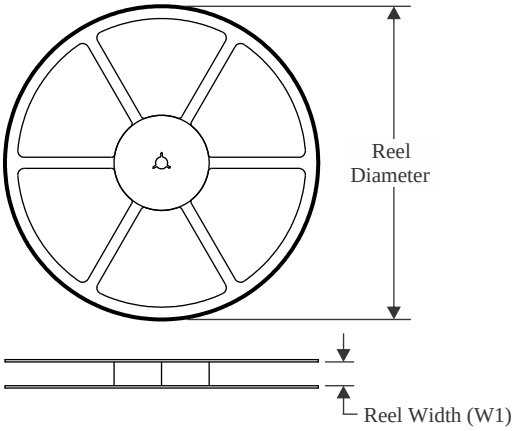


**TAPE DIMENSIONS**

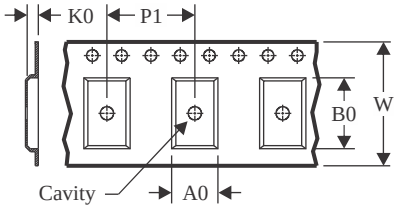


| | |
|---|---|
| A0 | Dimension designed to accommodate the component width |
| B0 | Dimension designed to accommodate the component length |
| K0 | Dimension designed to accommodate the component thickness |
| W | Overall width of the carrier tape |
| P1 | Pitch between successive cavity centers |

**QUADRANT ASSIGNMENTS FOR PIN 1 ORIENTATION IN TAPE**

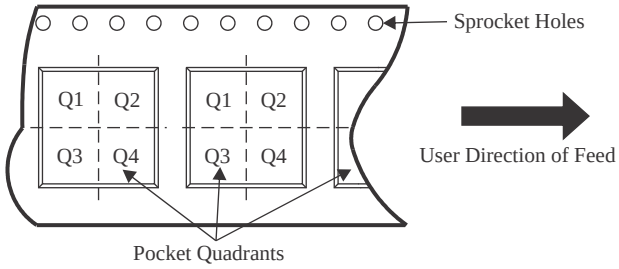


*All dimensions are nominal

| Device | Package Type | Package Drawing | Pins | SPQ | Reel Diameter (mm) | Reel Width W1 (mm) | A0 (mm) | B0 (mm) | K0 (mm) | P1 (mm) | W (mm) | Pin1 Quadrant |
|---|---|---|---|---|---|---|---|---|---|---|---|---|
| LM2597HVMX-12/NOPB | SOIC | D | 8 | 2500 | 330.0 | 12.4 | 6.4 | 5.2 | 2.1 | 8.0 | 12.0 | Q1 |
| LM2597HVMX-3.3/NOPB | SOIC | D | 8 | 2500 | 330.0 | 12.4 | 6.4 | 5.2 | 2.1 | 8.0 | 12.0 | Q1 |
| LM2597HVMX-5.0/NOPB | SOIC | D | 8 | 2500 | 330.0 | 12.4 | 6.4 | 5.2 | 2.1 | 8.0 | 12.0 | Q1 |
| LM2597HVMX-ADJ/NOPB | SOIC | D | 8 | 2500 | 330.0 | 12.4 | 6.4 | 5.2 | 2.1 | 8.0 | 12.0 | Q1 |
| LM2597MX-12/NOPB | SOIC | D | 8 | 2500 | 330.0 | 12.4 | 6.4 | 5.2 | 2.1 | 8.0 | 12.0 | Q1 |
| LM2597MX-3.3/NOPB | SOIC | D | 8 | 2500 | 330.0 | 12.4 | 6.4 | 5.2 | 2.1 | 8.0 | 12.0 | Q1 |
| LM2597MX-5.0/NOPB | SOIC | D | 8 | 2500 | 330.0 | 12.4 | 6.4 | 5.2 | 2.1 | 8.0 | 12.0 | Q1 |
| LM2597MX-ADJ/NOPB | SOIC | D | 8 | 2500 | 330.0 | 12.4 | 6.4 | 5.2 | 2.1 | 8.0 | 12.0 | Q1 |

TAPE AND REEL BOX DIMENSIONS

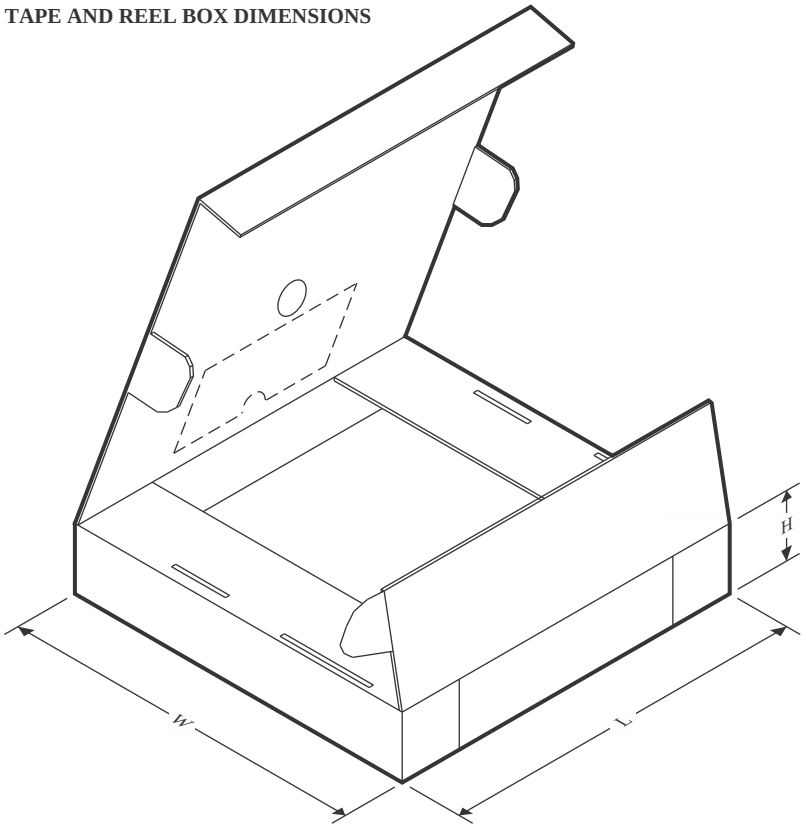


*All dimensions are nominal

| Device | Package Type | Package Drawing | Pins | SPQ | Length (mm) | Width (mm) | Height (mm) |
|---|---|---|---|---|---|---|---|
| LM2597HVMX-12/NOPB | SOIC | D | 8 | 2500 | 367.0 | 367.0 | 35.0 |
| LM2597HVMX-3.3/NOPB | SOIC | D | 8 | 2500 | 367.0 | 367.0 | 35.0 |
| LM2597HVMX-5.0/NOPB | SOIC | D | 8 | 2500 | 367.0 | 367.0 | 35.0 |
| LM2597HVMX-ADJ/NOPB | SOIC | D | 8 | 2500 | 367.0 | 367.0 | 35.0 |
| LM2597MX-12/NOPB | SOIC | D | 8 | 2500 | 367.0 | 367.0 | 35.0 |
| LM2597MX-3.3/NOPB | SOIC | D | 8 | 2500 | 367.0 | 367.0 | 35.0 |
| LM2597MX-5.0/NOPB | SOIC | D | 8 | 2500 | 367.0 | 367.0 | 35.0 |
| LM2597MX-ADJ/NOPB | SOIC | D | 8 | 2500 | 367.0 | 367.0 | 35.0 |

## TUBE

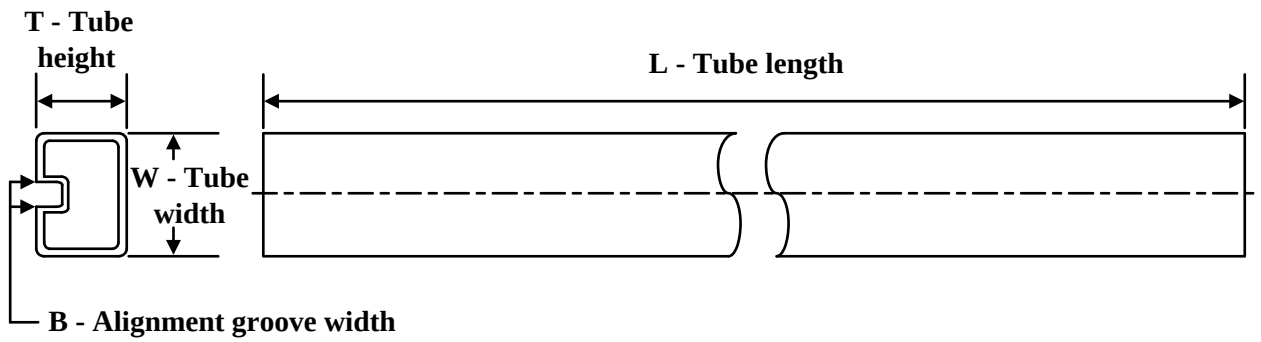


*All dimensions are nominal

| Device | Package Name | Package Type | Pins | SPQ | L (mm) | W (mm) | T (µm) | B (mm) |
|---|---|---|---|---|---|---|---|---|
| LM2597HVM-12/NOPB | D | SOIC | 8 | 95 | 495 | 8 | 4064 | 3.05 |
| LM2597HVM-12/NOPB.B | D | SOIC | 8 | 95 | 495 | 8 | 4064 | 3.05 |
| LM2597HVM-3.3/NOPB | D | SOIC | 8 | 95 | 495 | 8 | 4064 | 3.05 |
| LM2597HVM-3.3/NOPB.B | D | SOIC | 8 | 95 | 495 | 8 | 4064 | 3.05 |
| LM2597HVM-5.0/NOPB | D | SOIC | 8 | 95 | 495 | 8 | 4064 | 3.05 |
| LM2597HVM-5.0/NOPB.B | D | SOIC | 8 | 95 | 495 | 8 | 4064 | 3.05 |
| LM2597HVM-ADJ/NOPB | D | SOIC | 8 | 95 | 495 | 8 | 4064 | 3.05 |
| LM2597HVM-ADJ/NOPB.B | D | SOIC | 8 | 95 | 495 | 8 | 4064 | 3.05 |
| LM2597HVN-12/NOPB | P | PDIP | 8 | 40 | 502 | 14 | 11938 | 4.32 |
| LM2597HVN-12/NOPB.B | P | PDIP | 8 | 40 | 502 | 14 | 11938 | 4.32 |
| LM2597HVN-3.3/NOPB | P | PDIP | 8 | 40 | 502 | 14 | 11938 | 4.32 |
| LM2597HVN-3.3/NOPB.B | P | PDIP | 8 | 40 | 502 | 14 | 11938 | 4.32 |
| LM2597HVN-5.0/NOPB | P | PDIP | 8 | 40 | 502 | 14 | 11938 | 4.32 |
| LM2597HVN-5.0/NOPB.B | P | PDIP | 8 | 40 | 502 | 14 | 11938 | 4.32 |
| LM2597HVN-ADJ/NOPB | P | PDIP | 8 | 40 | 502 | 14 | 11938 | 4.32 |
| LM2597HVN-ADJ/NOPB.B | P | PDIP | 8 | 40 | 502 | 14 | 11938 | 4.32 |
| LM2597M-12/NOPB | D | SOIC | 8 | 95 | 495 | 8 | 4064 | 3.05 |
| LM2597M-12/NOPB.B | D | SOIC | 8 | 95 | 495 | 8 | 4064 | 3.05 |
| LM2597M-3.3/NOPB | D | SOIC | 8 | 95 | 495 | 8 | 4064 | 3.05 |
| LM2597M-3.3/NOPB.B | D | SOIC | 8 | 95 | 495 | 8 | 4064 | 3.05 |
| LM2597M-5.0/NOPB | D | SOIC | 8 | 95 | 495 | 8 | 4064 | 3.05 |
| LM2597M-5.0/NOPB.B | D | SOIC | 8 | 95 | 495 | 8 | 4064 | 3.05 |
| LM2597M-ADJ/NOPB | D | SOIC | 8 | 95 | 495 | 8 | 4064 | 3.05 |
| LM2597M-ADJ/NOPB.B | D | SOIC | 8 | 95 | 495 | 8 | 4064 | 3.05 |
| LM2597N-12/NOPB | P | PDIP | 8 | 40 | 502 | 14 | 11938 | 4.32 |
| LM2597N-12/NOPB.B | P | PDIP | 8 | 40 | 502 | 14 | 11938 | 4.32 |
| LM2597N-3.3/NOPB | P | PDIP | 8 | 40 | 502 | 14 | 11938 | 4.32 |
| LM2597N-3.3/NOPB.B | P | PDIP | 8 | 40 | 502 | 14 | 11938 | 4.32 |
| LM2597N-5.0/NOPB | P | PDIP | 8 | 40 | 502 | 14 | 11938 | 4.32 |

| Device | Package Name | Package Type | Pins | SPQ | L (mm) | W (mm) | T (µm) | B (mm) |
|---|---|---|---|---|---|---|---|---|
| LM2597N-5.0/NOPB.B | P | PDIP | 8 | 40 | 502 | 14 | 11938 | 4.32 |
| LM2597N-ADJ/NOPB | P | PDIP | 8 | 40 | 502 | 14 | 11938 | 4.32 |
| LM2597N-ADJ/NOPB.B | P | PDIP | 8 | 40 | 502 | 14 | 11938 | 4.32 |

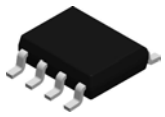

# PACKAGE OUTLINE

## D0008A

## SOIC - 1.75 mm max height

SMALL OUTLINE INTEGRATED CIRCUIT

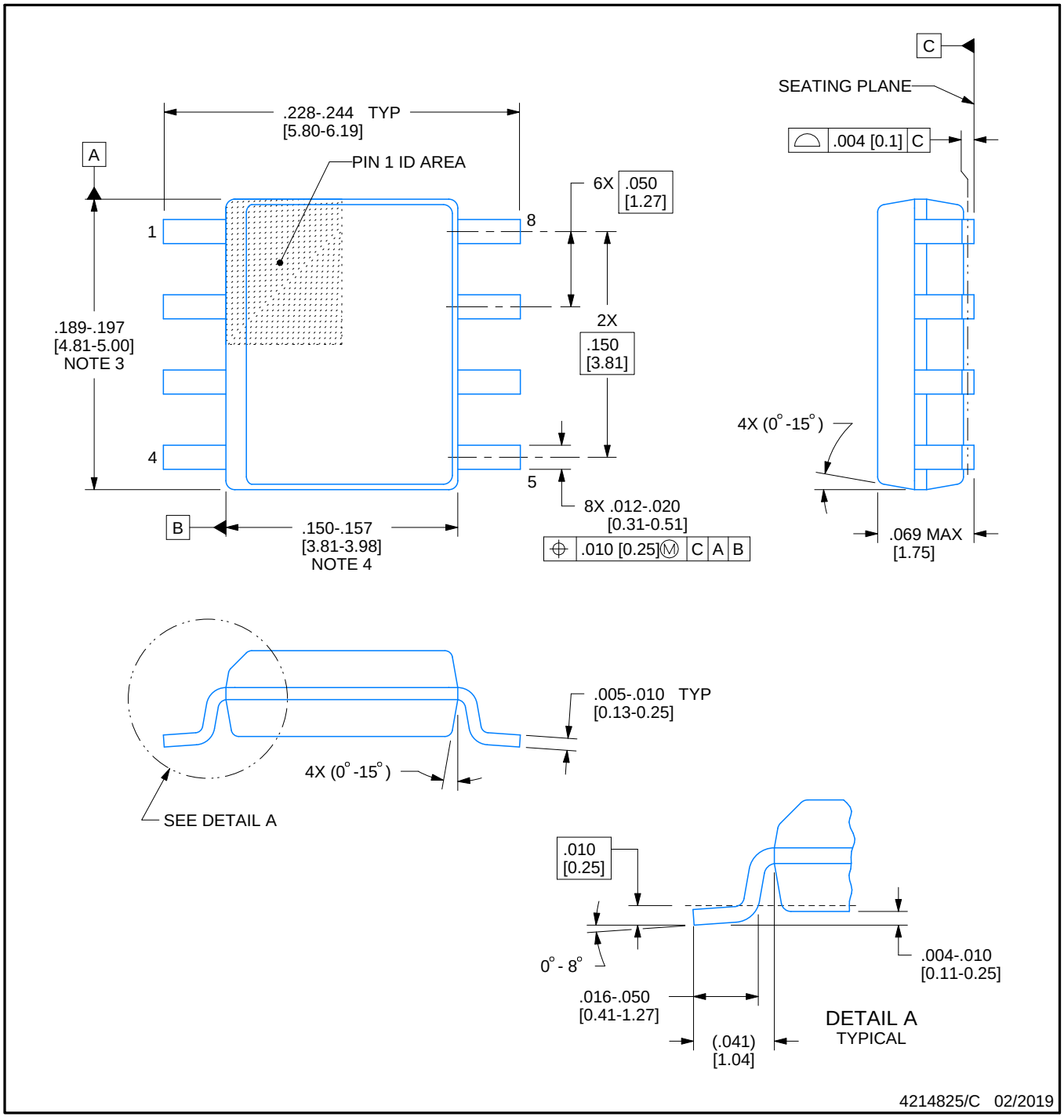


NOTES:

1. Linear dimensions are in inches [millimeters]. Dimensions in parenthesis are for reference only. Controlling dimensions are in inches. Dimensioning and tolerancing per ASME Y14.5M.
2. This drawing is subject to change without notice.
3. This dimension does not include mold flash, protrusions, or gate burrs. Mold flash, protrusions, or gate burrs shall not exceed .006 [0.15] per side.
4. This dimension does not include interlead flash.
5. Reference JEDEC registration MS-012, variation AA.

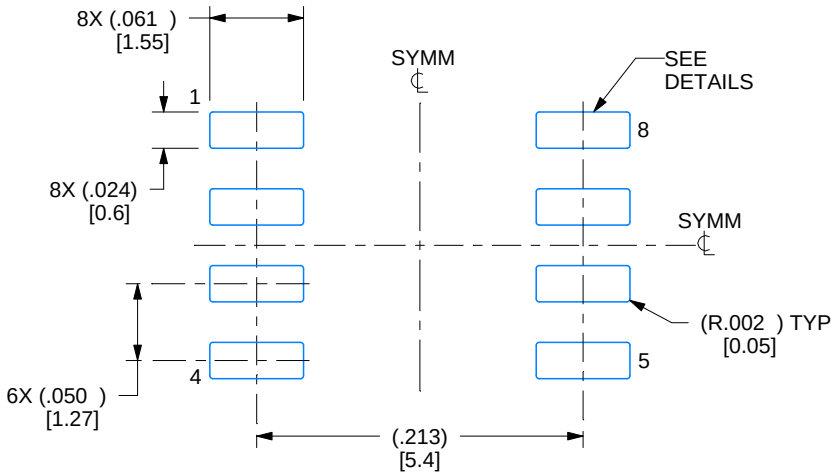


LAND PATTERN EXAMPLE
EXPOSED METAL SHOWN
SCALE:8X

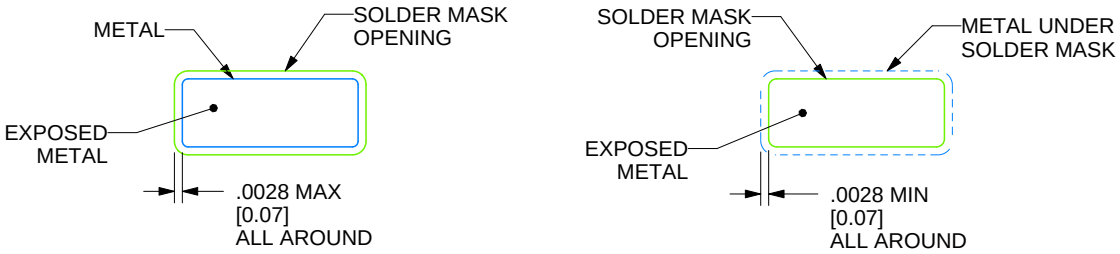


SOLDER MASK DETAILS

4214825/C 02/2019

NOTES: (continued)

6. Publication IPC-7351 may have alternate designs.
7. Solder mask tolerances between and around signal pads can vary based on board fabrication site.

# EXAMPLE STENCIL DESIGN

## D0008A

## SOIC - 1.75 mm max height

SMALL OUTLINE INTEGRATED CIRCUIT

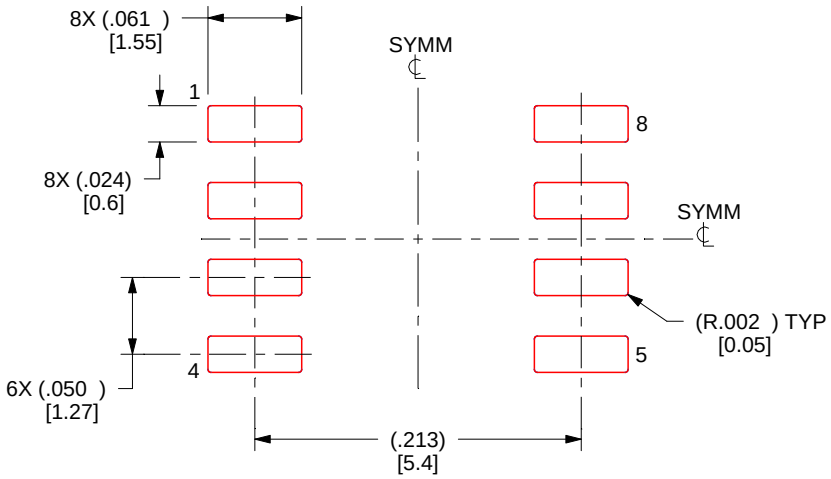


SOLDER PASTE EXAMPLE
BASED ON .005 INCH [0.125 MM] THICK STENCIL
SCALE:8X

4214825/C 02/2019

NOTES: (continued)

8. Laser cutting apertures with trapezoidal walls and rounded corners may offer better paste release. IPC-7525 may have alternate design recommendations.
9. Board assembly site may have different recommendations for stencil design.

P (R–PDIP–T8) PLASTIC DUAL–IN–LINE PACKAGE

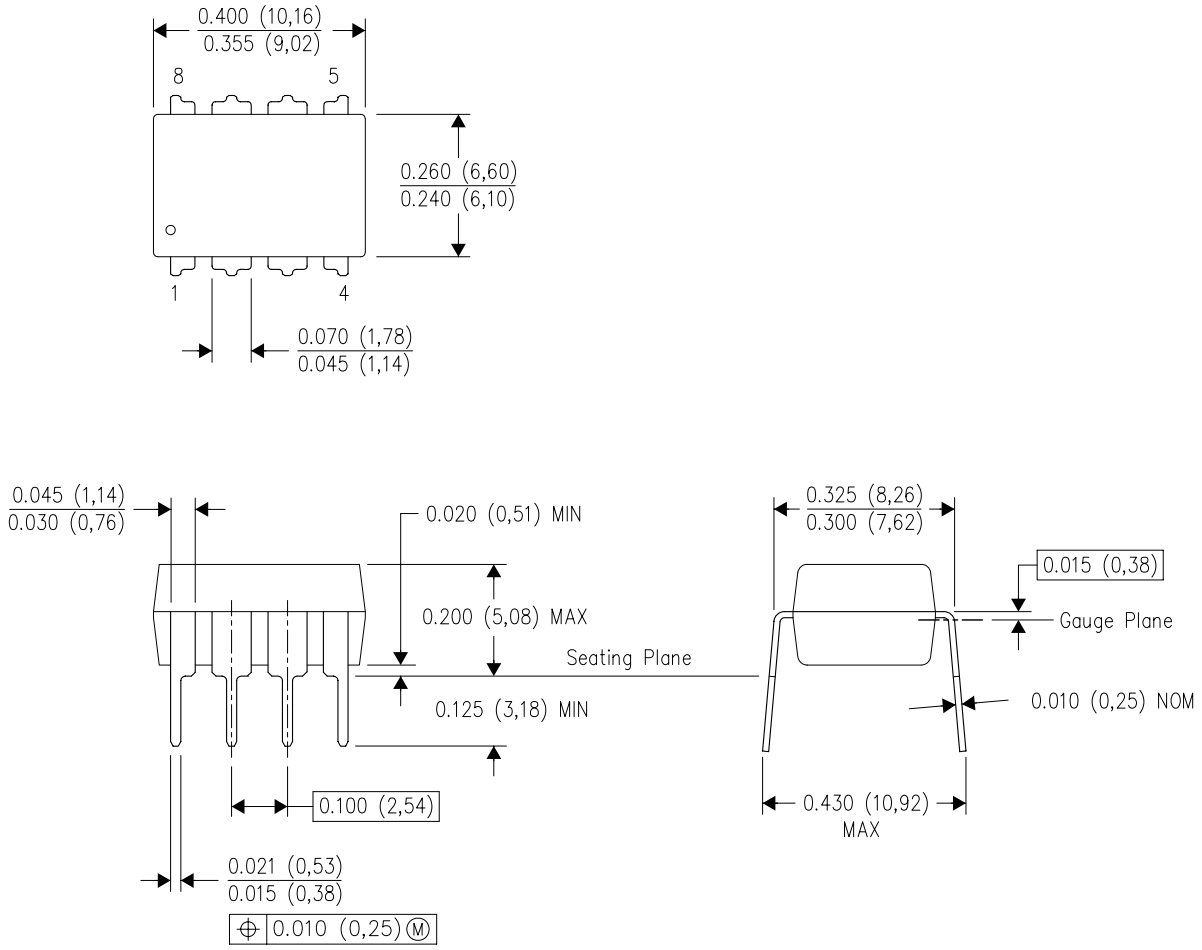


NOTES:
A. All linear dimensions are in inches (millimeters).
B. This drawing is subject to change without notice.
C. Falls within JEDEC MS–001 variation BA.

# 重要なお知らせと免責事項

TI は、技術データと信頼性データ (データシートを含みます)、設計リソース (リファレンス デザインを含みます)、アプリケーションや設計に関する各種アドバイス、Web ツール、安全性情報、その他のリソースを、欠陥が存在する可能性のある「現状のまま」提供しており、商品性および特定目的に対する適合性の黙示保証、第三者の知的財産権の非侵害保証を含むいかなる保証も、明示的または黙示的にかかわらず拒否します。

これらのリソースは、TI 製品を使用する設計の経験を積んだ開発者への提供を意図したものです。(1) お客様のアプリケーションに適した TI 製品の選定、(2) お客様のアプリケーションの設計、検証、試験、(3) お客様のアプリケーションに該当する各種規格や、その他のあらゆる安全性、セキュリティ、規制、または他の要件への確実な適合に関する責任を、お客様のみが単独で負うものとします。

上記の各種リソースは、予告なく変更される可能性があります。これらのリソースは、リソースで説明されている TI 製品を使用するアプリケーションの開発の目的でのみ、TI はその使用をお客様に許諾します。これらのリソースに関して、他の目的で複製することや掲載することは禁止されています。TI や第三者の知的財産権のライセンスが付与されている訳ではありません。お客様は、これらのリソースを自身で使用した結果発生するあらゆる申し立て、損害、費用、損失、責任について、TI およびその代理人を完全に補償するものとし、TI は一切の責任を拒否します。

TI の製品は、 TI の販売条件 、 TI の総合的な品質ガイドライン 、 ti.com または TI 製品などに関連して提供される他の適用条件に従い提供されます。TI がこれらのリソースを提供することは、適用される TI の保証または他の保証の放棄の拡大や変更を意味するものではありません。 TI がカスタム、またはカスタマー仕様として明示的に指定していない限り、TI の製品は標準的なカタログに掲載される汎用機器です。

お客様がいかなる追加条項または代替条項を提案する場合も、TI はそれらに異議を唱え、拒否します。

Copyright © 2026, Texas Instruments Incorporated

最終更新日：2025 年 10 月