TEXAS INSTRUMENTS
LM2853
JAJSAM0A – OCTOBER 2006 – REVISED SEPTEMBER 2017

LM2853 3A、550kHz、同期整流降圧レギュレータ

1 特長

- 3V～5.5Vの入力電圧範囲
- 出力電圧を0.8V～3.3Vの範囲で、100mV刻みに出荷時にEEPROMで設定
- 最大負荷電流: 3A
- 電圧モード制御
- タイプ3補償を内蔵
- スイッチング周波数: 550kHz
- 低いスタンバイ電流: 12µA
- 40mΩのMOSFETスイッチを内蔵
- 標準の電圧オプション
  - 0.8、1.0、1.2、1.5、1.8、2.5、3.0、3.3V
- 露出パッドの14リードHTSSOP (PWP)パッケージ

2 アプリケーション

- 低電圧のポイント・オブ・ロード(POL)レギュレーション
- FPGA/DSP/ASICコア電力のローカル・ソリューション
- ブロードバンド・ネットワークおよび通信インフラストラクチャ

アプリケーション回路例

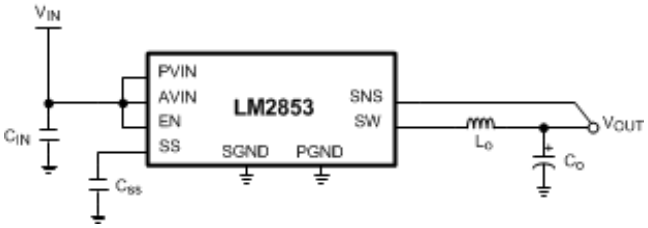

3 概要

LM2853同期整流降圧レギュレータは、550kHzの降圧スイッチング電圧レギュレータで、最大3Aの負荷を駆動でき、ラインおよび負荷レギュレーションが非常に優れています。LM2853は3V～5.5Vの入力電圧を受け付け、出力電圧は0.8V～3.3Vの範囲で、100mV刻みにカスタマイズ可能です(工場出荷時にプログラム)。タイプ3補償を内蔵しているため、少ない部品数でソリューションを構成でき、外付け部品の選択が非常に簡単になります。HTSSOP-14 (PWP)パッケージにより、LM2853の熱性能が強化されています。

製品情報(1)

型番	パッケージ	本体サイズ(公称)
LM2853	HTSSOP (14)	5.00mm×4.40mm

(1) 提供されているすべてのパッケージについては、データシートの末尾にある注文情報を参照してください。

効率とI_{LOAD}との関係

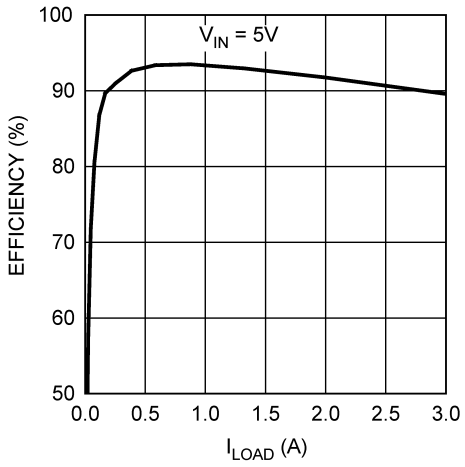

英語版のTI製品についての情報を翻訳したこの資料は、製品の概要を確認する目的で便宜的に提供しているものです。該当する正式な英語版の最新情報は、www.ti.comで閲覧でき、その内容が常に優先されます。TIでは翻訳の正確性および妥当性につきましては一切保証いたしません。実際の設計などの前には、必ず最新版の英語版をご参照くださいますようお願いいたします。

目次

1 特長 ... 1
2 アプリケーション ... 1
3 概要 ... 1
4 改訂履歴 ... 2
5 **Pin Configuration and Functions** ... 3
6 **Specifications** ... 4
6.1 Absolute Maximum Ratings ... 4
6.2 ESD Ratings ... 4
6.3 Recommended Operating Conditions ... 4
6.4 Thermal Information ... 4
6.5 Electrical Characteristics ... 5
6.6 Typical Characteristics ... 6
7 **Detailed Description** ... 8
7.1 Overview ... 8
7.2 Functional Block Diagram ... 8
8 **Application and Implementation** ... 9
8.1 Application Information ... 9
8.2 Typical Application ... 13
9 **Layout** ... 14
9.1 Layout Guidelines ... 14
9.2 Example Circuit Schematic and Bill of Materials ... 14
10 デバイスおよびドキュメントのサポート ... 16
10.1 ドキュメントの更新通知を受け取る方法 ... 16
10.2 コミュニティ・リソース ... 16
10.3 商標 ... 16
10.4 静電気放電に関する注意事項 ... 16
10.5 Glossary ... 16
11 メカニカル、パッケージ、および注文情報 ... 16

4 改訂履歴

2006年10月発行のものから更新 **Page**

- 「*アプリケーションと実装*」セクション、「*製品情報*」表、「*ピン構成および機能*」セクション、「*ESD定格*」セクション、「*熱に関する情報*」セクション、「*デバイスおよびドキュメントのサポート*」セクション、「*メカニカル、パッケージ、および注文情報*」セクション 追加 ... 1
- データシートのレイアウトをTIフォーマットに変更 ... 1

Copyright © 2006–2017, Texas Instruments Incorporated

5 Pin Configuration and Functions

PWP
14-HTSSOP
Top View

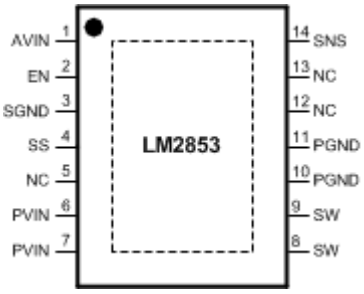

Pin Functions

NO.	NAME	DESCRIPTION
1	AVIN	Input Voltage for Control Circuitry
2	EN	Enable
3	SGND	Low noise ground
4	SS	Soft-Start Pin
5	NC	No Connect. This pin must be tied to ground.
6,7	PVIN	Input Voltage for Power Circuitry
8,9	SW	Switch Pin
10,11	PGND	Power Ground
12,13	NC	No-Connect. These pins must be tied to ground.
14	SNS	Output Voltage Sense Pin
Exposed Pad	EP	The exposed pad is internally connected to GND, but it cannot be used as the primary GND connection. The exposed pad should be soldered to an external GND plane.

Copyright © 2006–2017, Texas Instruments Incorporated

6 Specifications

6.1 Absolute Maximum Ratings

over operating free-air temperature range (unless otherwise noted)(1)

		MIN	MAX	UNIT
AVIN, PVIN, EN, SNS, SW, SS		–0.3	6	V
Power Dissipation		Internally Limited		V
14-Pin Exposed Pad HTSSOP Package (PWP)	Infrared (15 sec)		220	°C
	Vapor Phase (60 sec)		215	°C
	Soldering (10 sec)		260	°C
Maximum junction temperature			150	°C
Storage temperature, T_{stg}		–65	150	°C

(1) Stresses beyond those listed under *Absolute Maximum Ratings* may cause permanent damage to the device. These are stress ratings only, which do not imply functional operation of the device at these or any other conditions beyond those indicated under *Recommended Operating Conditions*. Exposure to absolute-maximum-rated conditions for extended periods may affect device reliability.

6.2 ESD Ratings

			VALUE	UNIT
$V_{(ESD)}$	Electrostatic discharge	Human-body model (HBM), per ANSI/ESDA/JEDEC JS-001(1)	±2	kV

(1) JEDEC document JEP155 states that 500-V HBM allows safe manufacturing with a standard ESD control process.

6.3 Recommended Operating Conditions

over operating free-air temperature range (unless otherwise noted) (1)

	MIN	MAX	UNIT
PVIN to GND	1.5	5.5	V
AVIN to GND	3	5.5	V
Operation junction temperature, T_J	–40	125	°C

(1) Absolute maximum ratings indicate limits beyond which damage to the device may occur. Operating Range indicates conditions for which the device is intended to be functional, but does not ensure specific performance limits. For ensured specifications and test conditions, see the Electrical Characteristics.

6.4 Thermal Information

THERMAL METRIC(1)		LM2853 PWP (HTSSOP) 14 PINS	UNIT
$R_{\theta JA}$	Junction-to-ambient thermal resistance	38	°C/W

(1) For more information about traditional and new thermal metrics, see the *Semiconductor and IC Package Thermal Metrics* application report.

Copyright © 2006–2017, Texas Instruments Incorporated

6.5 Electrical Characteristics

Specifications with standard typeface are for T_J = 25°C. Minimum and Maximum limits are ensured through test, design or statistical correlation. Typical values represent the most likely parametric norm at T_J = 25°C and are provided for reference purposes only. Unless otherwise specified AVIN = PVIN = 5 V.

PARAMETER		TEST CONDITIONS		MIN	TYP	MAX	UNIT
SYSTEM PARAMETERS							
V_{OUT}	Voltage tolerance (1)	V_{OUT} = 0.8 V option	T_J = –40°C to 125°C	0.782	0.8	0.818	V
		V_{OUT} = 1 V option	T_J = –40°C to 125°C	0.9775	1	1.0225	
		V_{OUT} = 1.2 V option	T_J = –40°C to 125°C	1.1730	1.2	1.227	
		V_{OUT} = 1.5 V option	T_J = –40°C to 125°C	1.4663	1.5	1.5337	
		V_{OUT} = 1.8 V option	T_J = –40°C to 125°C	1.7595	1.8	1.8405	
		V_{OUT} = 2.5 V option	T_J = –40°C to 125°C	2.4437	2.5	2.5563	
		V_{OUT} = 3 V option	T_J = –40°C to 125°C	2.9325	3	3.0675	
		V_{OUT} = 3.3 V option	T_J = –40°C to 125°C	3.2257	3.3	3.3743	
$\Delta V_{OUT}/\Delta A$ VIN	Line regulation (1)	V_{OUT} = 0.8 V, 1 V, 1.2 V, 1.5 V, 1.8 V or 2.5 V 3 V ≤ AVIN ≤ 5.5 V	T_J = –40°C to 125°C		0.2	1.1	%
		V_{OUT} = 3 V or 3.3 V 3.5 V ≤ AVIN ≤ 5.5 V	T_J = –40°C to 125°C		0.2	1.1	%
$\Delta V_{OUT}/\Delta I_O$	Load regulation	Normal operation			2		mV/A
V_{ON}	UVLO Threshold (AVIN)	Rising	T_J = –40°C to 125°C		2.47	3	V
		Falling hysteresis	T_J = –40°C to 125°C	50	155	260	mV
$R_{DS(ON)-P}$	PFET On resistance	Isw = 3A	T_J = –40°C to 125°C		40	120	mΩ
$R_{DS(ON)-N}$	NFET On resistance	Isw = 3A	T_J = –40°C to 125°C		32	100	mΩ
R_{SS}	Soft-Start resistance				450		kΩ
I_{CL}	Peak current limit threshold			3.6	5		A
I_Q	Operating current	Non-switching	T_J = –40°C to 125°C		0.85	2	mA
I_{SD}	Shutdown quiescent current	EN = 0 V	T_J = –40°C to 125°C		12	50	µA
R_{SNS}	Sense pin resistance				432		kΩ
PWM							
f_{osc}	Switching frequency	.	T_J = –40°C to 125°C	325	550	725	kHz
D_{range}	Duty cycle range		T_J = –40°C to 125°C	0		100	%
ENABLE CONTROL (2)							
V_{IH}	EN Pin minimum high input		T_J = –40°C to 125°C	75			% of AVIN
V_{IL}	EN Pin maximum low input		T_J = –40°C to 125°C			25	% of AVIN
I_{EN}	EN Pin pullup current	EN = 0 V			1.5		µA
THERMAL CONTROLS							
T_{SD}	Thermal shutdown threshold				165		°C
T_{SD-HYS}	Hysteresis for thermal shutdown				10		°C

(1) V_{OUT} measured in a non-switching, closed-loop configuration at the SNS pin.
(2) The enable pin is internally pulled up, so the LM2853 is automatically enabled unless an external enable voltage is applied.

Copyright © 2006–2017, Texas Instruments Incorporated

6.6 Typical Characteristics

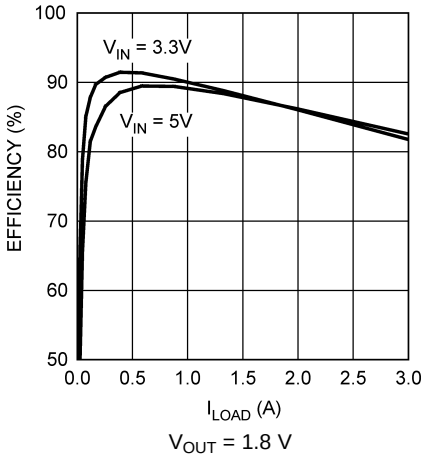

Figure 1. Efficiency vs I_{LOAD}

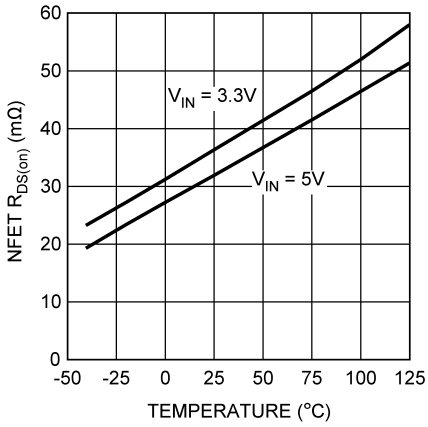

Figure 2. NFET $R_{DS(ON)}$ vs Temperature

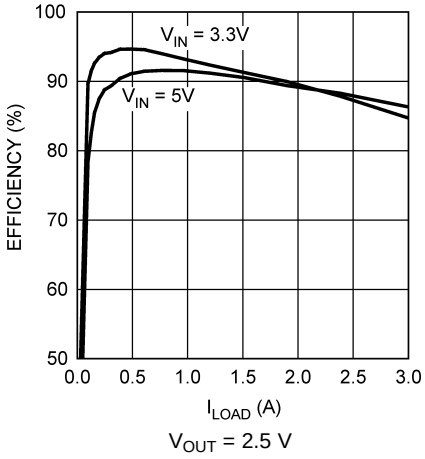

Figure 3. Efficiency vs I_{LOAD}

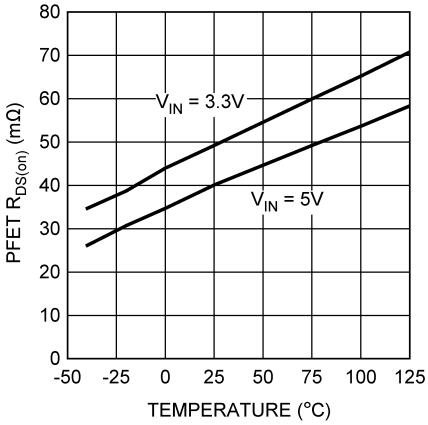

Figure 4. PFET $R_{DS(ON)}$ vs Temperature

Copyright © 2006–2017, Texas Instruments Incorporated

Typical Characteristics (continued)

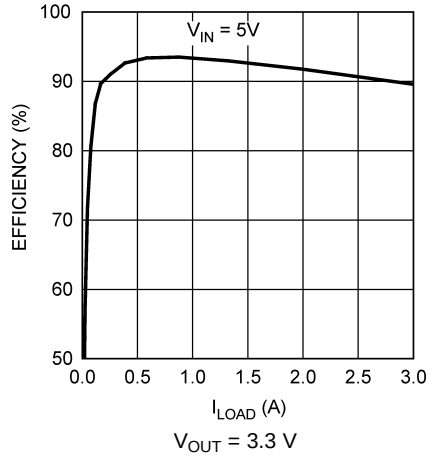

Figure 5. Efficiency vs I_{LOAD}

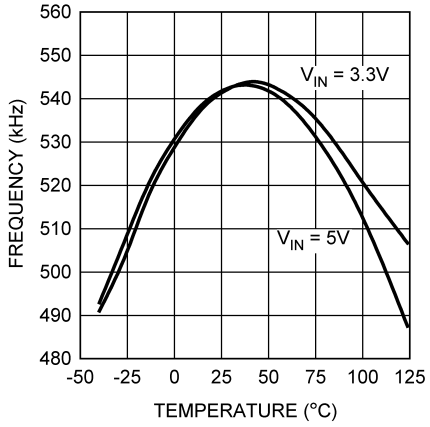

Figure 6. Switching Frequency vs Temperature

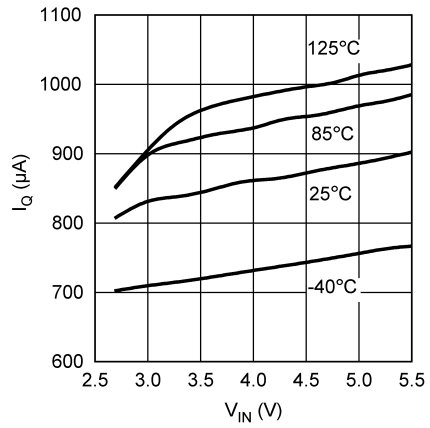

Figure 7. I_Q vs V_{IN} and Temperature

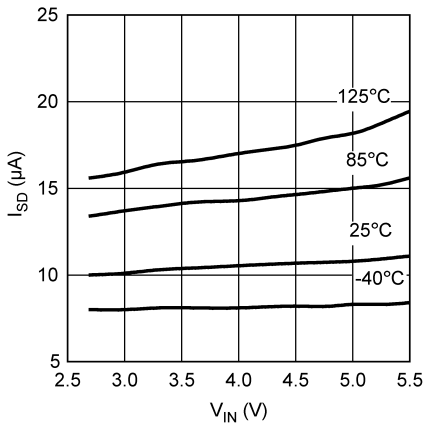

Figure 8. I_{SD} vs V_{IN} and Temperature

Copyright © 2006–2017, Texas Instruments Incorporated

7 Detailed Description

7.1 Overview

The LM2853 is a DC-DC buck regulator belonging to Texas Instrument's synchronous family. Integration of the PWM controller, power switches and compensation network greatly reduces the component count required to implement a switching power supply. A typical application requires only four components: an input capacitor, a soft-start capacitor, an output filter capacitor and an output filter inductor.

7.2 Functional Block Diagram

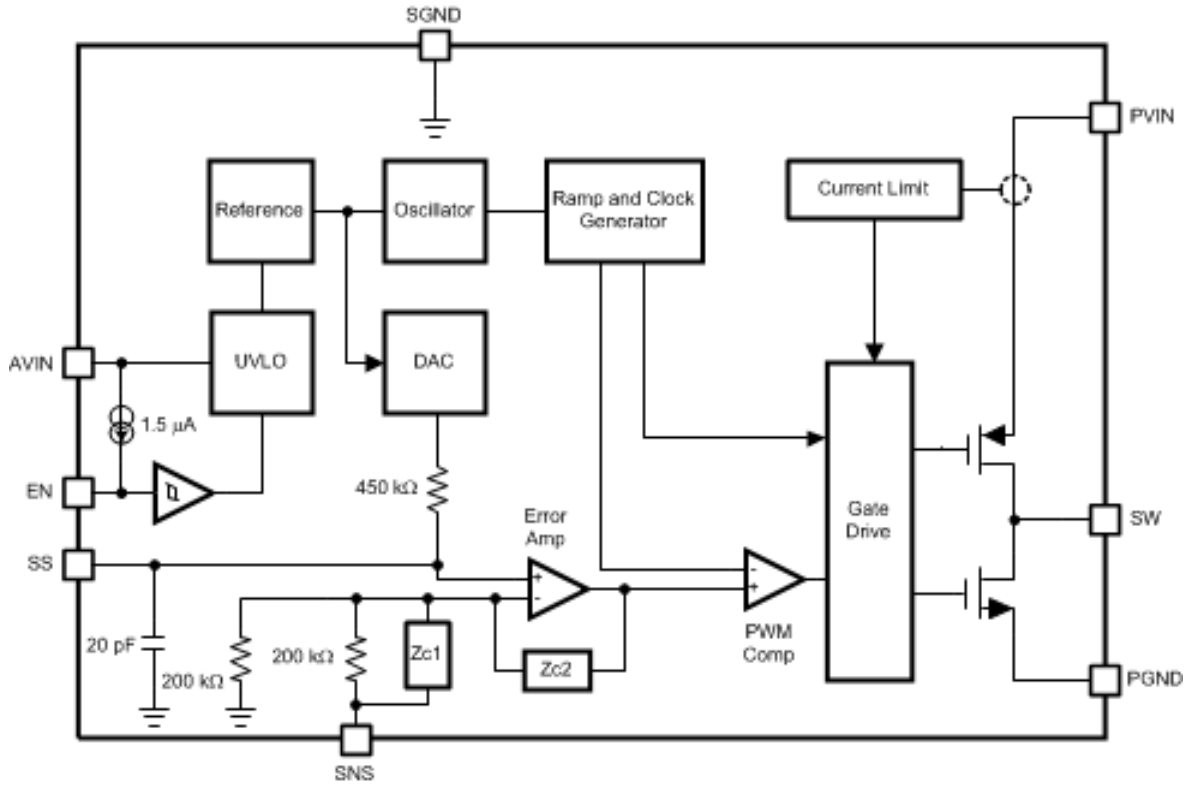

Copyright © 2006–2017, Texas Instruments Incorporated

8 Application and Implementation

NOTE

Information in the following applications sections is not part of the TI component specification, and TI does not warrant its accuracy or completeness. TI's customers are responsible for determining suitability of components for their purposes. Customers should validate and test their design implementation to confirm system functionality.

8.1 Application Information

8.1.1 Input Capacitor (C_{IN})

Fast switching of large currents in the buck converter places a heavy demand on the voltage source supplying PVIN. The input capacitor, C_{IN}, supplies extra charge when the switcher needs to draw a burst of current from the supply. The RMS current rating and the voltage rating of the C_{IN} capacitor are therefore important in the selection of C_{IN}. The RMS current specification can be approximated by:

$$I_{RMS} = I_{LOAD} \sqrt{D(1-D)} \quad (1)$$

where D is the duty cycle, V_{OUT}/V_{IN}. C_{IN} also provides filtering of the supply. Trace resistance and inductance degrade the benefits of the input capacitor, so C_{IN} should be placed very close to PVIN in the layout. A 22 µF or 47 µF ceramic capacitor is typically sufficient for C_{IN}. In parallel with the large input capacitance a smaller capacitor should be added such as a 1 µF ceramic for higher frequency filtering. Ceramic capacitors with high quality dielectrics such as X5R or X7R should be used to provide a constant capacitance across temperature and line variations. For improved load regulation and transient performance, the use of a small 1 µF ceramic capacitor is also recommended as a local bypass for the AVIN pin.

8.1.2 Soft-Start Capacitor (C_{SS})

The DAC that sets the reference voltage of the error amplifier sources a current through a resistor to set the reference voltage. The reference voltage is one half of the output voltage of the switcher due to the 200 kΩ divider connected to the SNS pin. Upon start-up, the output voltage of the switcher tracks the reference voltage with a two to one ratio as the DAC current charges the capacitance connected to the reference voltage node. Internal capacitance of 20 pF is permanently attached to the reference voltage node which is also connected to the soft start pin, SS. Adding a soft-start capacitor externally increases the time it takes for the output voltage to reach its final level. The charging time required for the reference voltage can be estimated using the RC time constant of the DAC resistor and the capacitance connected to the SS pin. Three RC time constant periods are needed for the reference voltage to reach 95% of its final value. The actual start up time will vary with differences in the DAC resistance and higher-order effects.

If little or no soft-start capacitance is connected, then the start up time may be determined by the time required for the current limit current to charge the output filter capacitance. The capacitor charging equation $I = C\Delta V/\Delta t$ can be used to estimate the start-up time in this case. For example, a part with a 3 V output, a 100 µF output capacitance and a 5A current limit threshold would require a time of 60 µs:

$$\Delta t = C \frac{\Delta V}{I} = 100\ \mu F \frac{3V}{5A} = 60\ \mu s \quad (2)$$

Since it is undesirable for the power supply to start up in current limit, a soft-start capacitor must be chosen to force the LM2853 to start up in a more controlled fashion based on the charging of the soft-start capacitance. In this example, suppose a 3 ms start time is desired. Three time constants are required for charging the soft-start capacitor to 95% of the final reference voltage. So in this case RC = 1 ms. The DAC resistor, R, is 450 kΩ so C can be calculated to be 2.2 nF. A 2.2 nF ceramic capacitor can be chosen to yield approximately a 3 ms start-up time.

Copyright © 2006–2017, Texas Instruments Incorporated

Application Information (continued)

8.1.3 Soft-Start Capacitor (C_{SS}) and Fault Conditions

Various fault conditions such as short circuit and UVLO of the LM2853 activate internal circuitry designed to control the voltage on the soft-start capacitor. For example, during a short circuit current limit event, the output voltage typically falls to a low voltage. During this time, the soft-start voltage is forced to track the output so that once the short is removed, the LM2853 can restart gracefully from whatever voltage the output reached during the short circuit event. The range of soft-start capacitors is therefore restricted to values 1 nF to 50 nF.

8.1.4 Compensation

The LM2853 provides a highly integrated solution to power supply design. The compensation of the LM2853, which is type-three, is included on-chip. The benefit of integrated compensation is straight-forward, simple power supply design. Since the output filter capacitor and inductor values impact the compensation of the control loop, the range of L_O, C_O and C_{ESR} values is restricted in order to ensure stability.

8.1.5 Output Filter Values

Table 1 details the recommended inductor and capacitor ranges for the LM2853 that are suggested for various typical output voltages. Values slightly different than those recommended may be used, however the phase margin of the power supply may be degraded. For best performance when output voltage ripple is a concern, ESR values near the minimum of the recommended range should be paired with capacitance values near the maximum. If a minimum output voltage ripple solution from a 5 V input voltage is desired, a 6.8 µH inductor can be paired with a 220 µF (50 mΩ) capacitor without degraded phase margin.

Table 1. Recommended L_O and C_O Values

V_{OUT} (V)	V_{IN} (V)	L_O (µH)		C_O (µF)		C_{ESR} (mΩ)	
		MIN	MAX	MIN	MAX	MIN	MAX
0.8	5	4.7	6.8	120	220	70	100
	3.3	4.7	4.7	150	220	50	100
1	5	4.7	6.8	120	220	70	100
	3.3	4.7	4.7	150	220	50	100
1.2	5	4.7	6.8	120	220	70	100
	3.3	4.7	4.7	120	220	60	100
1.5	5	4.7	6.8	120	220	70	100
	3.3	4.7	4.7	120	220	60	100
1.8	5	4.7	6.8	120	220	70	120
	3.3	4.7	4.7	100	220	70	120
2.5	5	4.7	6.8	120	220	70	150
	3.3	4.7	4.7	100	220	80	150
3.0	5	4.7	6.8	120	220	70	150
	3.3	4.7	4.7	100	220	80	150
3.3	5	4.7	6.8	120	220	70	150

8.1.6 Choosing an Inductance Value

The current ripple present in the output filter inductor is determined by the input voltage, output voltage, switching frequency and inductance according to Equation 3.

$$\Delta I_L = \frac{D \times (V_{IN} - V_{OUT})}{f \times L_O} \quad (3)$$

Copyright © 2006–2017, Texas Instruments Incorporated

where ΔI_L is the peak to peak current ripple, D is the duty cycle V_{OUT}/V_{IN}, V_{IN} is the input voltage applied to the output stage, V_{OUT} is the output voltage of the switcher, f is the switching frequency and L_O is the inductance of the output filter inductor. Knowing the current ripple is important for inductor selection since the peak current through the inductor is the load current plus one half the ripple current. Care must be taken to ensure the peak inductor current does not reach a level high enough to trip the current limit circuitry of the LM2853. As an example, consider a 5 V to 1.2 V conversion and a 550 kHz switching frequency. According to Table 1, a 4.7 µH inductor may be used. Calculating the expected peak-to-peak ripple,

$$\Delta I_L = \frac{\frac{1.2V}{5V} \times (5V - 1.2V)}{550\ kHz \times 4.7\ \mu F} = 353\ mA \quad (4)$$

The maximum inductor current for a 3A load would therefore be 3A plus 177 mA, 3.177A. As shown in the ripple equation (Equation 4), the current ripple is inversely proportional to inductance.

8.1.7 Output Filter Inductors

Once the inductance value is chosen, the key parameter for selecting the output filter inductor is its saturation current (I_{SAT}) specification. Typically I_{SAT} is given by the manufacturer as the current at which the inductance of the coil falls to a certain percentage of the nominal inductance. The I_{SAT} of an inductor used in an application should be greater than the maximum expected inductor current to avoid saturation. Table 2 lists inductors that are suitable in LM2853 applications.

Table 2. Recommended Inductors

INDUCTANCE	PART NUMBER	VENDOR
4.7 µF	DO3308P-472ML	Coilcraft
4.7 µF	DO3316P-472ML	Coilcraft
4.7 µF	MSS1260-472ML	Coilcraft
5.2 µF	MSS1038-522NL	Coilcraft
5.6 µF	MSS1260-562ML	Coilcraft
6.8 µF	DO3316P-682ML	Coilcraft
6.8 µF	MSS1260-682ML	Coilcraft

8.1.8 Output Filter Capacitors

The recommended capacitors that may be used in the output filter with the LM2853 are limited in value and ESR range according to Table 1.

Table 3 shows some examples of capacitors that can typically be used in a LM2853 application.

Table 3. Recommended Capacitors

CAPACITANCE (µF)	PART NUMBER	CHEMISTRY	VENDOR
100	594D107X_010C2T	Tantalum	Vishay-Sprague
100	593D107X_010D2_E3	Tantalum	Vishay-Sprague
100	TPSC107M006#0075	Tantalum	AVX
100	NOSD107M006#0080	Niobium Oxide	AVX
100	NOSC107M004#0070	Niobium Oxide	AVX
120	594D127X_6R3C2T	Tantalum	Vishay-Sprague
150	594D157X_010C2T	Tantalum	Vishay-Sprague
150	595D157X_010D2T	Tantalum	Vishay-Sprague
150	591D157X_6R3C2_20H	Tantalum	Vishay-Sprague
150	TPSD157M006#0050	Tantalum	AVX
150	TPSC157M004#0070	Tantalum	AVX
150	NOSD157M006#0070	Niobium Oxide	AVX
220	594D227X_6R3D2T	Tantalum	Vishay-Sprague

Copyright © 2006–2017, Texas Instruments Incorporated

Table 3. Recommended Capacitors (continued)

CAPACITANCE (µF)	PART NUMBER	CHEMISTRY	VENDOR
220	591D227X_6R3D2_20H	Tantalum	Vishay-Sprague
220	591D227X_010D2_20H	Tantalum	Vishay-Sprague
220	593D227X_6R3D2_E3	Tantalum	Vishay-Sprague
220	TPSD227M006#0050	Tantalum	AVX
220	NOSD227M0040060	Niobium Oxide	AVX

Copyright © 2006–2017, Texas Instruments Incorporated

8.1.9 Split-Rail Operation

The LM2853 can be powered using two separate voltages for AVIN and PVIN. AVIN is the supply for the control logic; PVIN is the supply for the power FETs. The output filter components need to be chosen based on the value of PVIN. For PVIN levels lower than 3.3 V, use output filter component values recommended for 3.3 V. PVIN must always be equal to or less than AVIN.

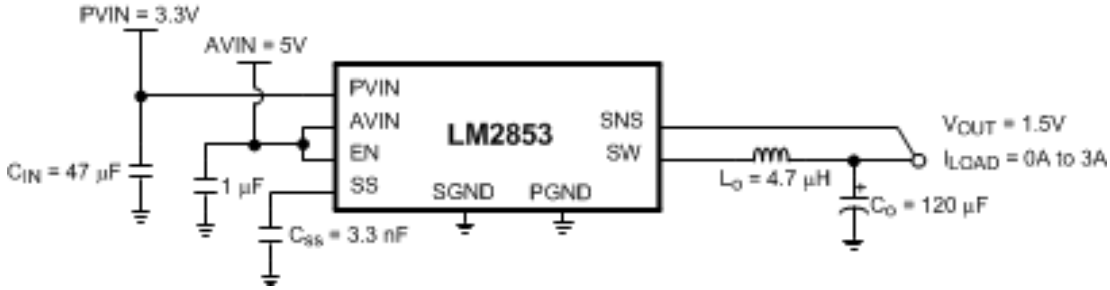

Figure 9. Split-Rail Operation Example Circuit

8.1.10 Switch Node Protection

The LM2853 includes protection circuitry that monitors the voltage on the switch pin. Under certain fault conditions, switching is disabled in order to protect the switching devices. One side effect of the protection circuitry may be observed when power to the LM2853 is applied with no or light load on the output. The output will regulate to the rated voltage, but no switching may be observed. As soon as the output is loaded, the LM2853 will begin normal switching operation.

8.2 Typical Application

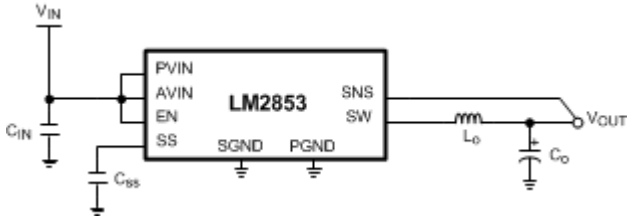

Figure 10. LM2853 Typical Application Circuit

9 Layout

9.1 Layout Guidelines

These are several guidelines to follow while designing the PCB layout for an LM2853 application.

1. The input bulk capacitor, C_{IN}, should be placed very close to the PVIN pin to keep the resistance as low as possible between the capacitor and the pin. High current levels will be present in this connection.
2. All ground connections must be tied together. Use a broad ground plane, for example a completely filled back plane, to establish the lowest resistance possible between all ground connections.
3. The sense pin connection should be made as close to the load as possible so that the voltage at the load is the expected regulated value. The sense line should not run too close to nodes with high dV/dt or dI/dt (such as the switch node) to minimize interference.
4. The switch node connections should be low resistance to reduce power losses. Low resistance means the trace between the switch pin and the inductor should be wide. However, the area of the switch node should not be too large since EMI increases with greater area. So connect the inductor to the switch pin with a short, but wide trace. Other high current connections in the application such as PVIN and V_{OUT} assume the same trade off between low resistance and EMI.
5. Allow area under the chip to solder the entire exposed die attach pad to ground for improved thermal performance. Lab measurements also show improved regulation performance when the exposed pad is well grounded.

9.2 Example Circuit Schematic and Bill of Materials

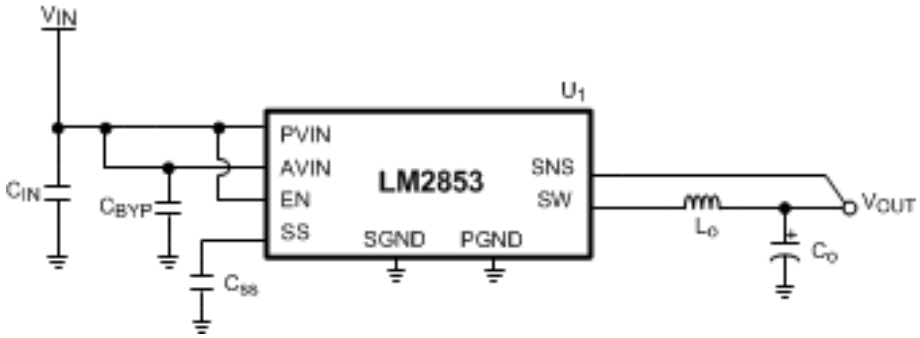

Figure 11. LM2853 Example Circuit Schematic

Table 4. Bill of Materials for 5 V to 3.3 V Conversion

ID	PART NUMBER	TYPE	SIZE	PARAMETERS	QTY	VENDOR
U_1	LM2853MH-3.3	3A Buck	HTSSOP-14	3.3 V	1	TI
C_{IN}	GRM31CR60J476ME19	Capacitor	1206	47 µF	1	Murata
C_{BYP}	GRM21BR71C105KA01	Capacitor	0805	1 µF	1	Murata
C_{SS}	VJ0805Y222KXXA	Capacitor	0603	2.2 nF	1	Vishay-Vitramon
L_O	DO3316P-682	Inductor	DO3316P	6.8 µH	1	Coilcraft
C_O	594D127X06R3C2T	Capacitor	C Case	120 µF (85 mΩ)	1	Vishay-Sprague

Table 5. Bill of Materials for 3.3 V to 1.2 V Conversion

ID	PART NUMBER	TYPE	SIZE	PARAMETERS	QTY	VENDOR
U_1	LM2853MH-1.2	3A Buck	HTSSOP-14	1.2 V	1	TI
C_{IN}	GRM31CR60J476ME19	Capacitor	1206	47 µF	1	Murata
C_{BYP}	GRM21BR71C105KA01	Capacitor	0805	1 µF	1	Murata
CSS	VJ0805Y222KXXA	Capacitor	0603	2.2 nF	1	Vishay-Vitramon
L_O	DO3316P-472	Inductor	DO3316P	4.7 µH	1	Coilcraft

Copyright © 2006–2017, Texas Instruments Incorporated

Table 5. Bill of Materials for 3.3 V to 1.2 V Conversion (continued)

ID	PART NUMBER	TYPE	SIZE	PARAMETERS	QTY	VENDOR
C_O	NOSD157M006R0070	Capacitor	D Case	150 μF (70 mΩ)	1	AVX

Copyright © 2006–2017, Texas Instruments Incorporated

10 デバイスおよびドキュメントのサポート

10.1 ドキュメントの更新通知を受け取る方法

ドキュメントの更新についての通知を受け取るには、ti.comのデバイス製品フォルダを開いてください。右上の隅にある「*通知を受け取る*」をクリックして登録すると、変更されたすべての製品情報に関するダイジェストを毎週受け取れます。変更の詳細については、修正されたドキュメントに含まれている改訂履歴をご覧ください。

10.2 コミュニティ・リソース

The following links connect to TI community resources. Linked contents are provided "AS IS" by the respective contributors. They do not constitute TI specifications and do not necessarily reflect TI's views; see TI's Terms of Use.

TI E2E™オンライン・コミュニティ ***TIのE2E（Engineer-to-Engineer）コミュニティ。*****エンジニア間の共同作業を促進するために開設されたものです。**e2e.ti.com**では、他のエンジニアに質問し、知識を共有し、アイディアを検討して、問題解決に役立てることができます。**

設計サポート ***TIの設計サポート*** **役に立つ**E2E**フォーラムや、設計サポート・ツールをすばやく見つけることができます。技術サポート用の連絡先情報も参照できます。**

10.3 商標

E2E is a trademark of Texas Instruments.
All other trademarks are the property of their respective owners.

10.4 静電気放電に関する注意事項



すべての集積回路は、適切なESD保護方法を用いて、取扱いと保存を行うようにして下さい。

静電気放電はわずかな性能の低下から完全なデバイスの故障に至るまで、様々な損傷を与えます。高精度の集積回路は、損傷に対して敏感であり、極めてわずかなパラメータの変化により、デバイスに規定された仕様に適合しなくなる場合があります。

10.5 Glossary

SLYZ022 — *TI Glossary*.

This glossary lists and explains terms, acronyms, and definitions.

11 メカニカル、パッケージ、および注文情報

以降のページには、メカニカル、パッケージ、および注文に関する情報が記載されています。この情報は、そのデバイスについて利用可能な最新のデータです。このデータは予告なく変更されることがあり、ドキュメントが改訂される場合もあります。本データシートのブラウザ版を使用されている場合は、画面左側の説明をご覧ください。

Copyright © 2006–2017, Texas Instruments Incorporated

PACKAGING INFORMATION

Orderable part number	Status (1)	Material type (2)	Package | Pins	Package qty | Carrier	RoHS (3)	Lead finish/ Ball material (4)	MSL rating/ Peak reflow (5)	Op temp (°C)	Part marking (6)
LM2853MH-1.0/NOPB	Active	Production	HTSSOP (PWP) | 14	94 | TUBE	Yes	SN	Level-1-260C-UNLIM	-40 to 125	LM2853 -1.0
LM2853MH-1.0/NOPB.A	Active	Production	HTSSOP (PWP) | 14	94 | TUBE	Yes	SN	Level-1-260C-UNLIM	-40 to 125	LM2853 -1.0
LM2853MH-1.2/NOPB	Active	Production	HTSSOP (PWP) | 14	94 | TUBE	Yes	SN	Level-1-260C-UNLIM	-40 to 125	LM2853 -1.2
LM2853MH-1.2/NOPB.A	Active	Production	HTSSOP (PWP) | 14	94 | TUBE	Yes	SN	Level-1-260C-UNLIM	-40 to 125	LM2853 -1.2
LM2853MH-1.5/NOPB	Active	Production	HTSSOP (PWP) | 14	94 | TUBE	Yes	SN	Level-1-260C-UNLIM	-40 to 125	LM2853 -1.5
LM2853MH-1.5/NOPB.A	Active	Production	HTSSOP (PWP) | 14	94 | TUBE	Yes	SN	Level-1-260C-UNLIM	-40 to 125	LM2853 -1.5
LM2853MH-1.8/NOPB	Active	Production	HTSSOP (PWP) | 14	94 | TUBE	Yes	SN	Level-1-260C-UNLIM	-40 to 125	LM2853 -1.8
LM2853MH-1.8/NOPB.A	Active	Production	HTSSOP (PWP) | 14	94 | TUBE	Yes	SN	Level-1-260C-UNLIM	-40 to 125	LM2853 -1.8
LM2853MH-2.5/NOPB	Active	Production	HTSSOP (PWP) | 14	94 | TUBE	Yes	SN	Level-1-260C-UNLIM	-40 to 125	LM2853 -2.5
LM2853MH-2.5/NOPB.A	Active	Production	HTSSOP (PWP) | 14	94 | TUBE	Yes	SN	Level-1-260C-UNLIM	-40 to 125	LM2853 -2.5
LM2853MH-3.0/NOPB	Active	Production	HTSSOP (PWP) | 14	94 | TUBE	Yes	SN	Level-1-260C-UNLIM	-40 to 125	LM2853 -3.0
LM2853MH-3.0/NOPB.A	Active	Production	HTSSOP (PWP) | 14	94 | TUBE	Yes	SN	Level-1-260C-UNLIM	-40 to 125	LM2853 -3.0
LM2853MH-3.3/NOPB	Active	Production	HTSSOP (PWP) | 14	94 | TUBE	Yes	SN	Level-1-260C-UNLIM	-40 to 125	LM2853 -3.3
LM2853MH-3.3/NOPB.A	Active	Production	HTSSOP (PWP) | 14	94 | TUBE	Yes	SN	Level-1-260C-UNLIM	-40 to 125	LM2853 -3.3
LM2853MHX-1.0/NOPB	Active	Production	HTSSOP (PWP) | 14	2500 | LARGE T&R	Yes	SN	Level-1-260C-UNLIM	-40 to 125	LM2853 -1.0
LM2853MHX-1.0/NOPB.A	Active	Production	HTSSOP (PWP) | 14	2500 | LARGE T&R	Yes	SN	Level-1-260C-UNLIM	-40 to 125	LM2853 -1.0

Orderable part number	Status (1)	Material type (2)	Package | Pins	Package qty | Carrier	RoHS (3)	Lead finish/ Ball material (4)	MSL rating/ Peak reflow (5)	Op temp (°C)	Part marking (6)
LM2853MHX-1.2/NOPB	Active	Production	HTSSOP (PWP) | 14	2500 | LARGE T&R	Yes	SN	Level-1-260C-UNLIM	-40 to 125	LM2853 -1.2
LM2853MHX-1.2/NOPB.A	Active	Production	HTSSOP (PWP) | 14	2500 | LARGE T&R	Yes	SN	Level-1-260C-UNLIM	-40 to 125	LM2853 -1.2
LM2853MHX-1.5/NOPB	Active	Production	HTSSOP (PWP) | 14	2500 | LARGE T&R	Yes	SN	Level-1-260C-UNLIM	-40 to 125	LM2853 -1.5
LM2853MHX-1.5/NOPB.A	Active	Production	HTSSOP (PWP) | 14	2500 | LARGE T&R	Yes	SN	Level-1-260C-UNLIM	-40 to 125	LM2853 -1.5
LM2853MHX-1.8/NOPB	Active	Production	HTSSOP (PWP) | 14	2500 | LARGE T&R	Yes	SN	Level-1-260C-UNLIM	-40 to 125	LM2853 -1.8
LM2853MHX-1.8/NOPB.A	Active	Production	HTSSOP (PWP) | 14	2500 | LARGE T&R	Yes	SN	Level-1-260C-UNLIM	-40 to 125	LM2853 -1.8
LM2853MHX-2.5/NOPB	Active	Production	HTSSOP (PWP) | 14	2500 | LARGE T&R	Yes	SN	Level-1-260C-UNLIM	-40 to 125	LM2853 -2.5
LM2853MHX-2.5/NOPB.A	Active	Production	HTSSOP (PWP) | 14	2500 | LARGE T&R	Yes	SN	Level-1-260C-UNLIM	-40 to 125	LM2853 -2.5
LM2853MHX-3.3/NOPB	Active	Production	HTSSOP (PWP) | 14	2500 | LARGE T&R	Yes	SN	Level-1-260C-UNLIM	-40 to 125	LM2853 -3.3
LM2853MHX-3.3/NOPB.A	Active	Production	HTSSOP (PWP) | 14	2500 | LARGE T&R	Yes	SN	Level-1-260C-UNLIM	-40 to 125	LM2853 -3.3

(1) **Status:** For more details on status, see our product life cycle.

(2) **Material type:** When designated, preproduction parts are prototypes/experimental devices, and are not yet approved or released for full production. Testing and final process, including without limitation quality assurance, reliability performance testing, and/or process qualification, may not yet be complete, and this item is subject to further changes or possible discontinuation. If available for ordering, purchases will be subject to an additional waiver at checkout, and are intended for early internal evaluation purposes only. These items are sold without warranties of any kind.

(3) **RoHS values:** Yes, No, RoHS Exempt. See the TI RoHS Statement for additional information and value definition.

(4) **Lead finish/Ball material:** Parts may have multiple material finish options. Finish options are separated by a vertical ruled line. Lead finish/Ball material values may wrap to two lines if the finish value exceeds the maximum column width.

(5) **MSL rating/Peak reflow:** The moisture sensitivity level ratings and peak solder (reflow) temperatures. In the event that a part has multiple moisture sensitivity ratings, only the lowest level per JEDEC standards is shown. Refer to the shipping label for the actual reflow temperature that will be used to mount the part to the printed circuit board.

(6) **Part marking:** There may be an additional marking, which relates to the logo, the lot trace code information, or the environmental category of the part.

Multiple part markings will be inside parentheses. Only one part marking contained in parentheses and separated by a "~" will appear on a part. If a line is indented then it is a continuation of the previous line and the two combined represent the entire part marking for that device.

Important Information and Disclaimer: The information provided on this page represents TI's knowledge and belief as of the date that it is provided. TI bases its knowledge and belief on information provided by third parties, and makes no representation or warranty as to the accuracy of such information. Efforts are underway to better integrate information from third parties. TI has taken and continues to take reasonable steps to provide representative and accurate information but may not have conducted destructive testing or chemical analysis on incoming materials and chemicals. TI and TI suppliers consider certain information to be proprietary, and thus CAS numbers and other limited information may not be available for release.

In no event shall TI's liability arising out of such information exceed the total purchase price of the TI part(s) at issue in this document sold by TI to Customer on an annual basis.

TAPE AND REEL INFORMATION

REEL DIMENSIONS

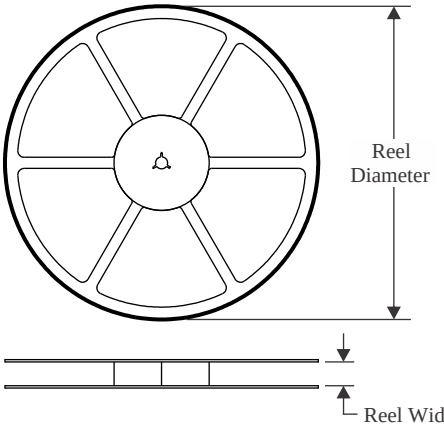

TAPE DIMENSIONS

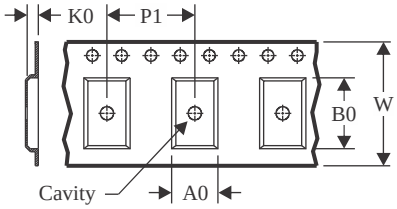

A0	Dimension designed to accommodate the component width
B0	Dimension designed to accommodate the component length
K0	Dimension designed to accommodate the component thickness
W	Overall width of the carrier tape
P1	Pitch between successive cavity centers

QUADRANT ASSIGNMENTS FOR PIN 1 ORIENTATION IN TAPE

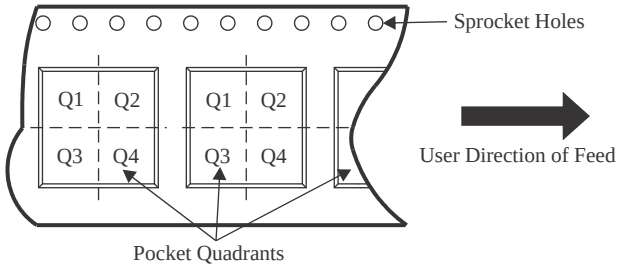

*All dimensions are nominal

Device	Package Type	Package Drawing	Pins	SPQ	Reel Diameter (mm)	Reel Width W1 (mm)	A0 (mm)	B0 (mm)	K0 (mm)	P1 (mm)	W (mm)	Pin1 Quadrant
LM2853MHX-1.0/NOPB	HTSSOP	PWP	14	2500	330.0	12.4	6.9	5.6	1.6	8.0	12.0	Q1
LM2853MHX-1.2/NOPB	HTSSOP	PWP	14	2500	330.0	12.4	6.9	5.6	1.6	8.0	12.0	Q1
LM2853MHX-1.5/NOPB	HTSSOP	PWP	14	2500	330.0	12.4	6.9	5.6	1.6	8.0	12.0	Q1
LM2853MHX-1.8/NOPB	HTSSOP	PWP	14	2500	330.0	12.4	6.9	5.6	1.6	8.0	12.0	Q1
LM2853MHX-2.5/NOPB	HTSSOP	PWP	14	2500	330.0	12.4	6.9	5.6	1.6	8.0	12.0	Q1
LM2853MHX-3.3/NOPB	HTSSOP	PWP	14	2500	330.0	12.4	6.9	5.6	1.6	8.0	12.0	Q1

TAPE AND REEL BOX DIMENSIONS

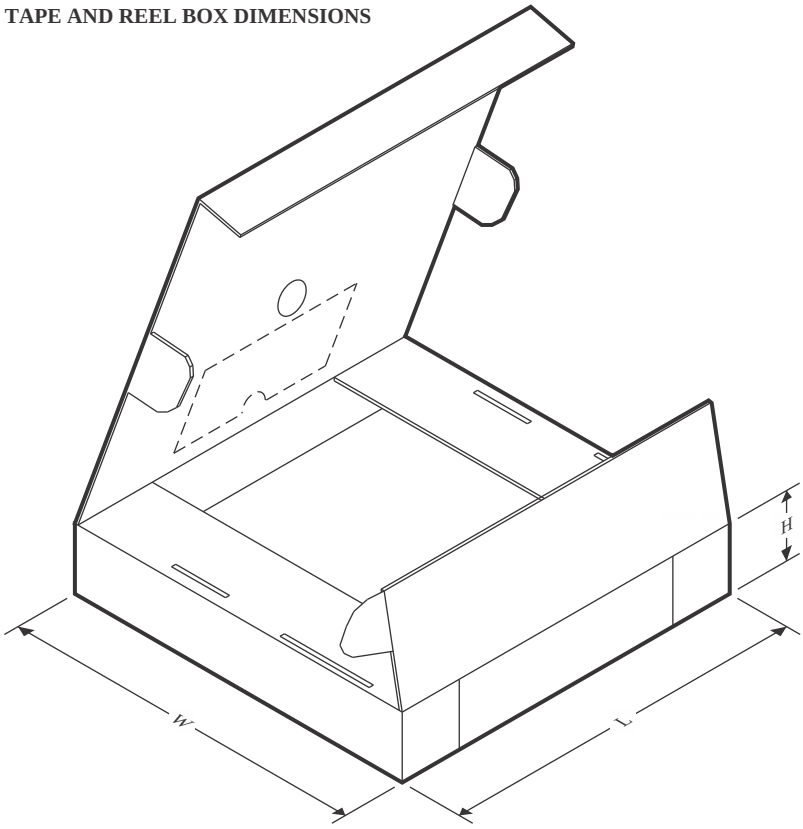

*All dimensions are nominal

Device	Package Type	Package Drawing	Pins	SPQ	Length (mm)	Width (mm)	Height (mm)
LM2853MHX-1.0/NOPB	HTSSOP	PWP	14	2500	367.0	367.0	35.0
LM2853MHX-1.2/NOPB	HTSSOP	PWP	14	2500	367.0	367.0	35.0
LM2853MHX-1.5/NOPB	HTSSOP	PWP	14	2500	367.0	367.0	35.0
LM2853MHX-1.8/NOPB	HTSSOP	PWP	14	2500	367.0	367.0	35.0
LM2853MHX-2.5/NOPB	HTSSOP	PWP	14	2500	367.0	367.0	35.0
LM2853MHX-3.3/NOPB	HTSSOP	PWP	14	2500	367.0	367.0	35.0

TUBE

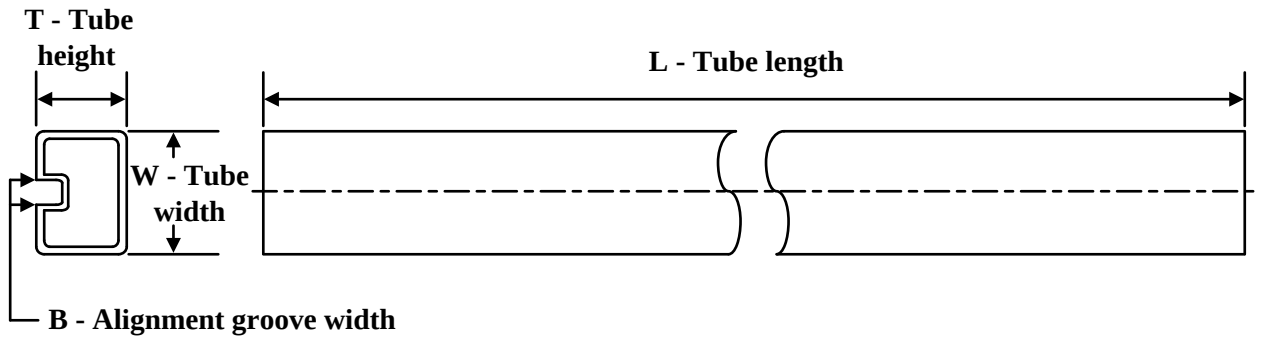

*All dimensions are nominal

Device	Package Name	Package Type	Pins	SPQ	L (mm)	W (mm)	T (µm)	B (mm)
LM2853MH-1.0/NOPB	PWP	HTSSOP	14	94	495	8	2514.6	4.06
LM2853MH-1.0/NOPB.A	PWP	HTSSOP	14	94	495	8	2514.6	4.06
LM2853MH-1.2/NOPB	PWP	HTSSOP	14	94	495	8	2514.6	4.06
LM2853MH-1.2/NOPB.A	PWP	HTSSOP	14	94	495	8	2514.6	4.06
LM2853MH-1.5/NOPB	PWP	HTSSOP	14	94	495	8	2514.6	4.06
LM2853MH-1.5/NOPB.A	PWP	HTSSOP	14	94	495	8	2514.6	4.06
LM2853MH-1.8/NOPB	PWP	HTSSOP	14	94	495	8	2514.6	4.06
LM2853MH-1.8/NOPB.A	PWP	HTSSOP	14	94	495	8	2514.6	4.06
LM2853MH-2.5/NOPB	PWP	HTSSOP	14	94	495	8	2514.6	4.06
LM2853MH-2.5/NOPB.A	PWP	HTSSOP	14	94	495	8	2514.6	4.06
LM2853MH-3.0/NOPB	PWP	HTSSOP	14	94	495	8	2514.6	4.06
LM2853MH-3.0/NOPB.A	PWP	HTSSOP	14	94	495	8	2514.6	4.06
LM2853MH-3.3/NOPB	PWP	HTSSOP	14	94	495	8	2514.6	4.06
LM2853MH-3.3/NOPB.A	PWP	HTSSOP	14	94	495	8	2514.6	4.06

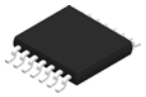

PACKAGE OUTLINE

PWP0014A

PowerPAD™ TSSOP - 1.2 mm max height

PLASTIC SMALL OUTLINE

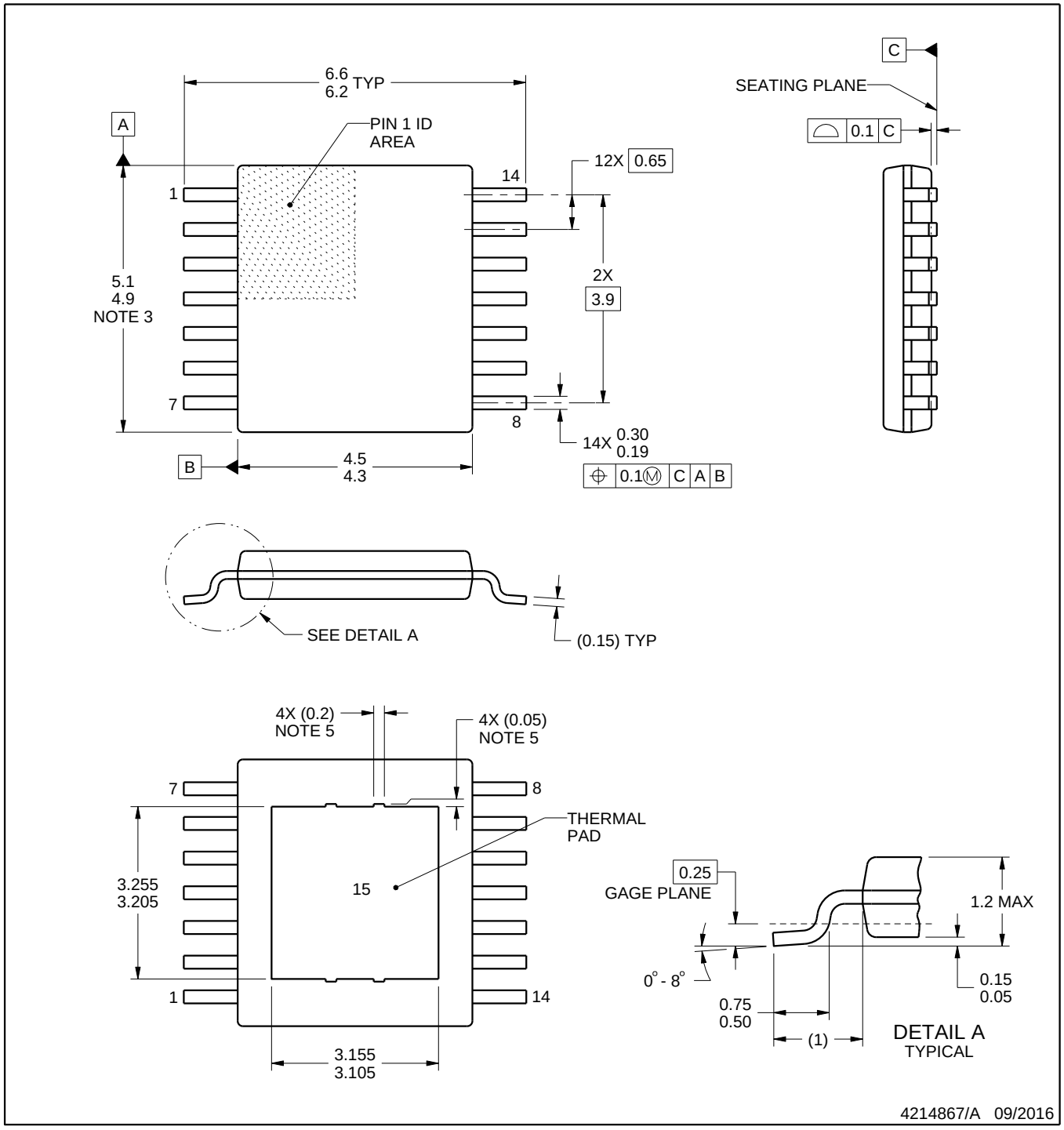

PowerPAD is a trademark of Texas Instruments.

NOTES:

1. All linear dimensions are in millimeters. Any dimensions in parenthesis are for reference only. Dimensioning and tolerancing per ASME Y14.5M.
2. This drawing is subject to change without notice.
3. This dimension does not include mold flash, protrusions, or gate burrs. Mold flash, protrusions, or gate burrs shall not exceed 0.15 mm per side.
4. Reference JEDEC registration MO-153.
5. Features may differ and may not be present.

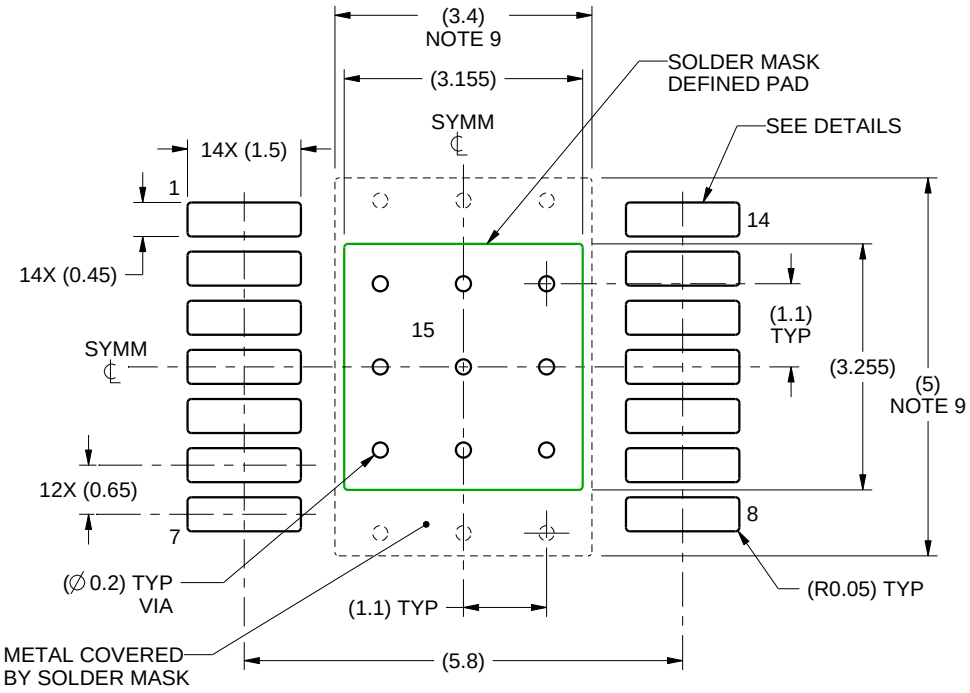

LAND PATTERN EXAMPLE
SCALE:10X

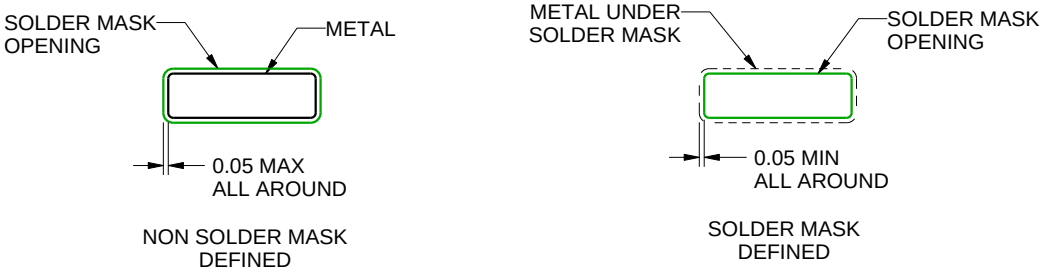

SOLDER MASK DETAILS
PADS 1-14

4214867/A 09/2016

NOTES: (continued)

6. Publication IPC-7351 may have alternate designs.
7. Solder mask tolerances between and around signal pads can vary based on board fabrication site.
8. This package is designed to be soldered to a thermal pad on the board. For more information, see Texas Instruments literature numbers SLMA002 (www.ti.com/lit/slma002) and SLMA004 (www.ti.com/lit/slma004).
9. Size of metal pad may vary due to creepage requirement.

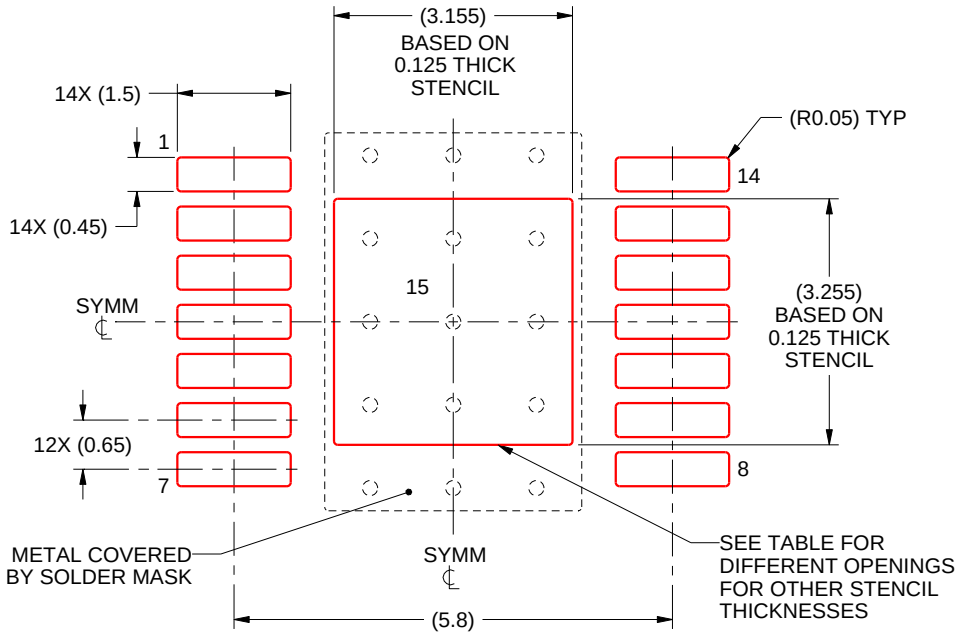

SOLDER PASTE EXAMPLE
EXPOSED PAD
100% PRINTED SOLDER COVERAGE BY AREA
SCALE:10X

STENCIL THICKNESS	SOLDER STENCIL OPENING
0.1	3.53 X 3.64
0.125	3.155 X 3.255 (SHOWN)
0.15	2.88 X 2.97
0.175	2.67 X 2.75

4214867/A 09/2016

NOTES: (continued)

10. Laser cutting apertures with trapezoidal walls and rounded corners may offer better paste release. IPC-7525 may have alternate design recommendations.
11. Board assembly site may have different recommendations for stencil design.

重要なお知らせと免責事項

TI は、技術データと信頼性データ (データシートを含みます)、設計リソース (リファレンス デザインを含みます)、アプリケーションや設計に関する各種アドバイス、Web ツール、安全性情報、その他のリソースを、欠陥が存在する可能性のある「現状のまま」提供しており、商品性および特定目的に対する適合性の黙示保証、第三者の知的財産権の非侵害保証を含むいかなる保証も、明示的または黙示的にかかわらず拒否します。

これらのリソースは、TI 製品を使用する設計の経験を積んだ開発者への提供を意図したものです。(1) お客様のアプリケーションに適した TI 製品の選定、(2) お客様のアプリケーションの設計、検証、試験、(3) お客様のアプリケーションに該当する各種規格や、その他のあらゆる安全性、セキュリティ、規制、または他の要件への確実な適合に関する責任を、お客様のみが単独で負うものとします。

上記の各種リソースは、予告なく変更される可能性があります。これらのリソースは、リソースで説明されている TI 製品を使用するアプリケーションの開発の目的でのみ、TI はその使用をお客様に許諾します。これらのリソースに関して、他の目的で複製することや掲載することは禁止されています。TI や第三者の知的財産権のライセンスが付与されている訳ではありません。お客様は、これらのリソースを自身で使用した結果発生するあらゆる申し立て、損害、費用、損失、責任について、TI およびその代理人を完全に補償するものとし、TI は一切の責任を拒否します。

TI の製品は、 TI の販売条件 、 TI の総合的な品質ガイドライン 、 ti.com または TI 製品などに関連して提供される他の適用条件に従い提供されます。TI がこれらのリソースを提供することは、適用される TI の保証または他の保証の放棄の拡大や変更を意味するものではありません。 TI がカスタム、またはカスタマー仕様として明示的に指定していない限り、TI の製品は標準的なカタログに掲載される汎用機器です。

お客様がいかなる追加条項または代替条項を提案する場合も、TI はそれらに異議を唱え、拒否します。

Copyright © 2026, Texas Instruments Incorporated

最終更新日：2025 年 10 月