LM74680 低損失整流向け、理想ダイオード ブリッジ コントローラ

1 特長

- 動作入力電圧範囲:5V～80V
  - 絶対最大電圧 100V
- 4 つのゲートドライブ制御を内蔵
- 165µA のゲート プルアップ強度
- 100mA のゲート プルダウン強度
- 電源 OR 接続アプリケーション向けのリニア ゲート レギュレーション制御
  - V_{TG_REG} = 11mV
- ユーザー制御によるデバイスのオン / オフ機能用イネーブル ピン
- 動作時の接合部温度範囲:–40℃～125℃
- 小さい占有面積:3mm×3mm VQFN-12
  - IPC-9592 の間隔規定に適合

2 アプリケーション

- ビデオ付きドア ベル
- IP カメラ
- サーモスタット
- 配電システム (24Vac)
- 極性のない電源入力

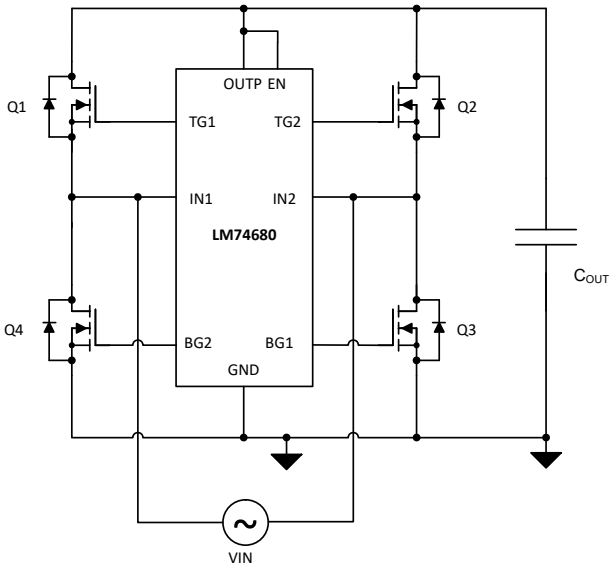

代表的なアプリケーション回路図

3 概要

LM74680 は、フルブリッジ構成で 4 個の N チャネル MOSFET を駆動し、電圧整流を行う理想ダイオード ブリッジ コントローラです。LM74680 を使用すれば、従来のダイオード ブリッジ整流器に比べて電圧降下が小さくなり、消費電力を低減できます。これにより、電源設計の簡素化、ヒートシンクの省略、PCB 面積の削減が可能になります。内蔵チャージ ポンプにより N チャネル MOSFET の使用が可能です。N チャネルは、同じ電力レベルの P チャネル MOSFET よりも小型で、コスト効率が優れています。また、逆電流条件に対する高速応答を備えており、入力短絡への保護を提供します。LM74680 にはイネーブル ピンがあり、外部信号によってゲート ドライバをイネーブルまたはディセーブルできます。LM74680 は、DC～1kHz の電圧整流をサポートしています。

このデバイスは、-40℃～+125℃の接合部温度範囲で動作が規定されています。

パッケージ情報

部品番号	パッケージ(1)	パッケージ サイズ(2)
LM74680	DRR (WSON、12)	3mm × 3mm

(1) 利用可能なすべてのパッケージについては、データシートの末尾にある注文情報を参照してください。
(2) パッケージ サイズ (長さ × 幅) は公称値で、該当する場合はピンも含まれます。

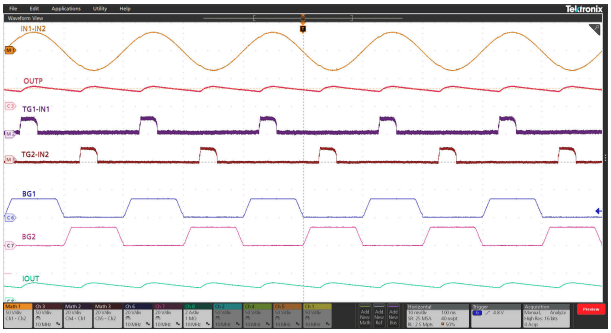

24V AC 入力、C_{OUT} = 1mF、30W 負荷、定常状態

このリソースの元の言語は英語です。翻訳は概要を便宜的に提供するもので、自動化ツール (機械翻訳) を使用していることがあり、TI では翻訳の正確性および妥当性につきましては一切保証いたしません。実際の設計などの前には、ti.com で必ず最新の英語版をご参照くださいますようお願いいたします。

Table of Contents

1 特長.....1
2 アプリケーション.....1
3 概要.....1
4 Pin Configuration and Functions.....3
5 Specifications.....4
5.1 Absolute Maximum Ratings.....4
5.2 ESD Ratings.....4
5.3 Recommended Operating Conditions.....4
5.4 Thermal Information.....4
5.5 Electrical Characteristics.....5
5.6 Switching Characteristics.....5
5.7 Typical Characteristics.....7
6 Parameter Measurement Information.....9
7 Detailed Description.....10
7.1 Overview.....10
7.2 Functional Block Diagram.....10
7.3 Feature Description.....11
7.4 Device Functional Modes.....13
8 Application and Implementation.....14
8.1 Application Information.....14
8.2 Typical Application.....14
8.3 Power Supply Recommendations.....17
8.4 Layout.....17
9 Device and Documentation Support.....19
9.1 ドキュメントの更新通知を受け取る方法.....19
9.2 サポート・リソース.....19
9.3 Trademarks.....19
9.4 静電気放電に関する注意事項.....19
9.5 用語集.....19
10 Revision History.....19
11 Mechanical, Packaging, and Orderable Information.....19

Copyright © 2025 Texas Instruments Incorporated

4 Pin Configuration and Functions

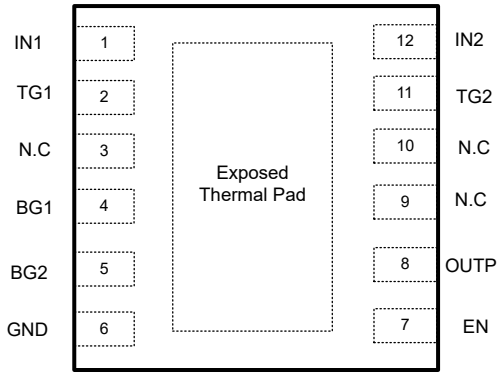

図 4-1. DRR Package, 12-Pin WSON (Top View)

表 4-1. Pin Functions

PIN		I/O(1)	DESCRIPTION
NO.	NAME		
1	IN1	I	Bridge rectifier input 1. Connect to top side MOSFET Q1 source and bottom side MOSFET Q4 drain.
2	TG1	O	Top side MOSFET gate drive 1.
3	N.C	—	No connection.
4	BG1	O	Bottom side MOSFET gate drive 1.
5	BG2	O	Bottom side MOSFET gate drive 2.
6	GND	G	Device ground. Connect to bottom side MOSFETs Q3 and Q4 source and output ground.
7	EN	I	Enable pin. Can be connected to OUTP for always ON operation
8	OUTP	I	Bridge rectifier output. Connect to top side MOSFETs Q1 and Q2 drain. Connect a minimum of 0.1µF between OUTP and GND close to the IC.
9	N.C	—	No connection.
10	N.C	—	No connection.
11	TG2	O	Top side MOSFET gate drive 2.
12	IN2	I	Bridge rectifier input 2. Connect to top side MOSFET Q2 source and bottom side MOSFET Q3 drain.

(1) I = input, O = output, G = ground

Copyright © 2025 Texas Instruments Incorporated

5 Specifications

5.1 Absolute Maximum Ratings

over operating free-air temperature range (unless otherwise noted)(1)

		MIN	MAX	UNIT
Input Pins	OUTP to GND	–0.3	100	V
	IN1, IN2 to GND	–2	OUTP+2	
	EN to GND	–0.3	OUTP	
	IN1-IN2	-100	100	
Output Pins	BG1, BG2 to GND	–0.3	15	V
	TG1 to IN1 and TG2 to IN2	–0.3	15	
Operating junction temperature(2)		–40	150	°C
Storage temperature, T_{stg}		–40	150	°C

(1) Stresses beyond those listed under Absolute Maximum Ratings may cause permanent damage to the device. These are stress ratings only, which do not imply functional operation of the device at these or any other conditions beyond those indicated under Recommended Operating Conditions. Exposure to absolute-maximum-rated conditions for extended periods may affect device reliability.
(2) High junction temperatures degrade operating lifetimes. Operating lifetime is de-rated for junction temperatures greater than 125°C.

5.2 ESD Ratings

			VALUE	UNIT
$V_{(ESD)}$	Electrostatic discharge	Human body model (HBM), per ANSI/ESDA/ JEDEC JS-001(1)	±2000	V
		Charged device model (CDM), per JEDEC specification JS-002(2)	±500	

(1) JEDEC document JEP155 states that 500-V HBM allows safe manufacturing with a standard ESD control process.
(2) JEDEC document JEP157 states that 250-V CDM allows safe manufacturing with a standard ESD control process.

5.3 Recommended Operating Conditions

over operating free-air temperature range (unless otherwise noted)(1)

		MIN	NOM	MAX	UNIT
Input Pins	OUTP to GND	5		80	V
	EN to GND	0		OUTP	
Input to Output pins	OUTP to INx	–80			V
External MOSFET max V_{GS} rating	GATE to SOURCE	15			V
T_J	Operating junction temperature range(2)	–40		150	°C

(1) Recommended Operating Conditions are conditions under which the device is intended to be functional. For specifications and test conditions, see セクション 5.5.
(2) High junction temperatures degrade operating lifetimes. Operating lifetime is de-rated for junction temperatures greater than 125°C.

5.4 Thermal Information

THERMAL METRIC(1)		LM74680 DRR (WSON) 12 PINS	UNIT
$R_{\theta JA}$	Junction-to-ambient thermal resistance	60.9	°C/W
$R_{\theta JC(top)}$	Junction-to-case (top) thermal resistance	48	°C/W
$R_{\theta JB}$	Junction-to-board thermal resistance	31.5	°C/W
Ψ_{JT}	Junction-to-top characterization parameter	1.2	°C/W
Ψ_{JB}	Junction-to-board characterization parameter	31.4	°C/W

Copyright © 2025 Texas Instruments Incorporated

5.4 Thermal Information (続き)

THERMAL METRIC(1)		LM74680 DRR (WSON) 12 PINS	UNIT
$R_{\theta JC(bot)}$	Junction-to-case (bottom) thermal resistance	7.1	°C/W

(1) For more information about traditional and new thermal metrics, see the Semiconductor and IC Package Thermal Metrics application report.

5.5 Electrical Characteristics

T_J = –40°C to +125°C; typical values at T_J = 25°C, OUTP = 24 V, V_{EN} = OUTP, C_{OUT}: 1 µF over operating free-air temperature range (unless otherwise noted)

PARAMETER		TEST CONDITIONS	MIN	TYP	MAX	UNIT
SUPPLY VOLTAGE						
V_{OUTP}	OUTP voltage range		5		80	V
V_{OUTP_PORR}	OUTP POR rising threshold		3.72	4.3	4.8	V
V_{OUTP_PORF}	OUTP POR falling threshold		3.4	4.0	4.5	V
$V_{OUTP_POR_Hys}$	OUTP POR Hysteresis			0.3		V
I_Q	Operating Quiescent Current	OUTP = 24V		270	450	µA
I_{SHDN}	Shutdown Supply Current	V_{EN} = 0 V		0.27	3.82	µA
I_{INx}	Input pin current	$V_{INx} – V_{OUTP}$ = 30mV		10	16	µA
ENABLE INPUT						
V_{EN_IL}	Enable input low threshold		0.413	0.7	0.96	V
V_{EN_IH}	Enable input high threshold		0.631	0.9	1.15	
V_{EN_Hys}	Enable Hysteresis		0.134	0.2	0.265	V
I_{EN}	Enable sink current	V_{EN} = 48 V		72	241	nA
V_{IN} to V_{OUTP}						
V_{FWD}	Reverse to forward turn ON threshold		169	195	226	mV
V_{REV}	Threshold for reverse current blocking		-17	-11	-5	mV
V_{TG_REG}	Top side gate regulation voltage		7	11	16	mV
$V_{TG_REG_SINK}$	Top side regulation sink current		5	10	16	µA
V_{TG_FC}	Full conduction threshold			56		mV
GATE DRIVE						
$V_{TGx} – V_{INx}$	Top Gate Drive Voltage		8.7	10	11.1	V
$V_{BGx} – V_{GND}$	Bottom Gate Drive Voltage		11.96	13	13.85	V
I_{TGx}	Peak source current	$V_{INx} – V_{GND}$ = 100 mV, $V_{TGx} – V_{INx}$ = 5 V	124	165	210	µA
	Peak sink current	$V_{INx} – V_{GND}$ = –50 mV, $V_{TGx} – V_{INx}$ = 5 V		100		mA
I_{BGx}	Peak source current	$V_{BGx} – V_{GND}$ = 5 V	1.8	2.5	3.5	mA
	Peak sink current	$V_{BGx} – V_{GND}$ = 5 V		80		mA

5.6 Switching Characteristics

T_J = –40°C to +125°C; typical values at T_J = 25°C, OUTP = 24 V, V_{EN} = OUTP, C_{OUT}: 1uF over operating free-air temperature range (unless otherwise noted)

PARAMETER		TEST CONDITIONS	MIN	TYP	MAX	UNIT
EN_{TDLY}	Enable (low to high) to TGx Turn On delay			175	300	µs

Copyright © 2025 Texas Instruments Incorporated

5.6 Switching Characteristics (続き)

T_J = –40°C to +125°C; typical values at T_J = 25°C, OUTP = 24 V, V_{EN} = OUTP, C_{OUT}: 1uF over operating free-air temperature range (unless otherwise noted)

PARAMETER		TEST CONDITIONS	MIN	TYP	MAX	UNIT
EN_{TDLY}	Enable (low to high) to BGx Turn On delay			6.5	11	µs
$t_{Reverse\ Delay}$	Reverse voltage detection to TGx Turn Off delay	$V_{(IN)} – V_{(OUTP)}$ = 100 mV to –100 mV		2	3.5	µs
$t_{Forward\ Recovery}$	Forward voltage detection to TGx Turn On delay	$V_{(IN)} – V_{(OUTP)}$ = –100 mV to 700 mV		5	9.1	µs

Copyright © 2025 Texas Instruments Incorporated

5.7 Typical Characteristics

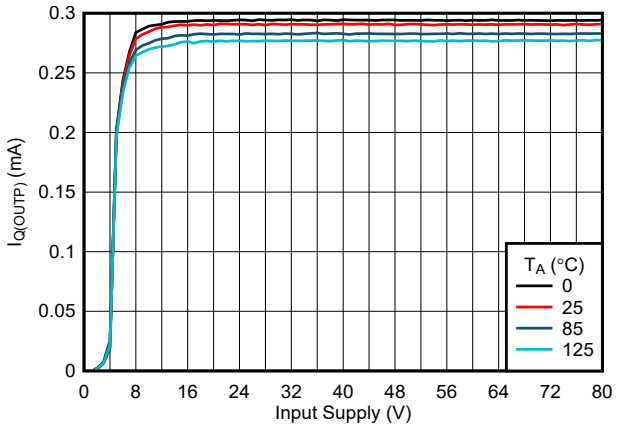

図 5-1. I_Q vs Supply Voltage

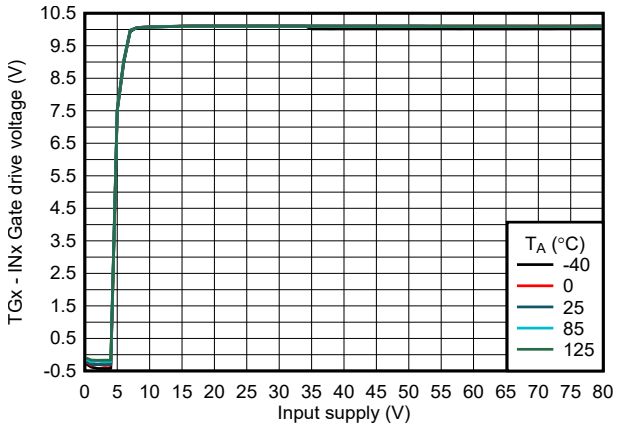

図 5-2. Top Side Gate Drive Voltage vs Supply Voltage

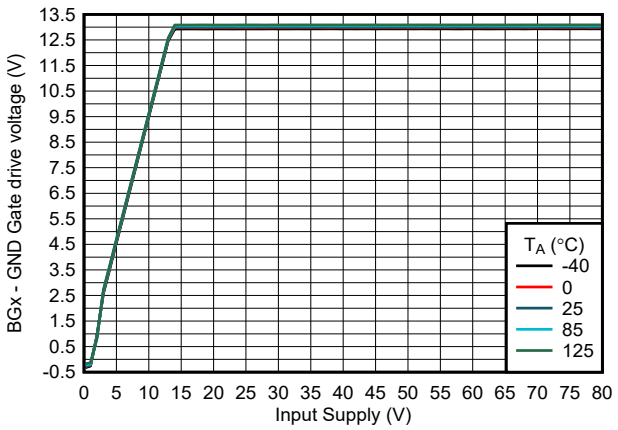

図 5-3. Bottom Side Gate Drive Voltage vs Supply Voltage

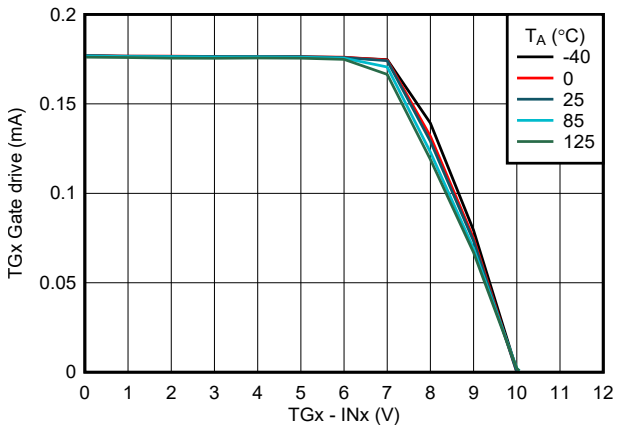

図 5-4. Top Side Gate Drive Source Current vs Gate Drive Voltage

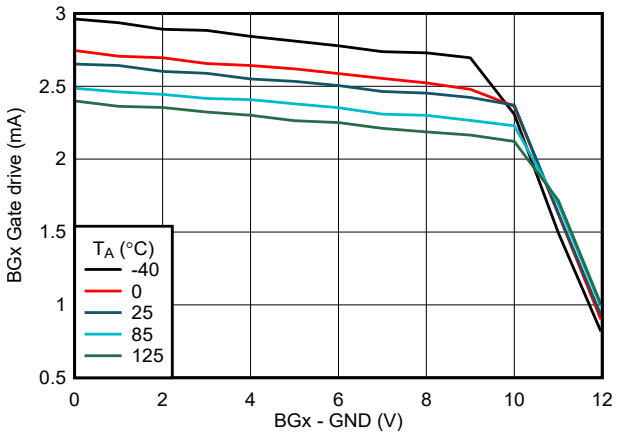

図 5-5. Bottom Side Gate Drive Source Current vs Gate Drive Voltage

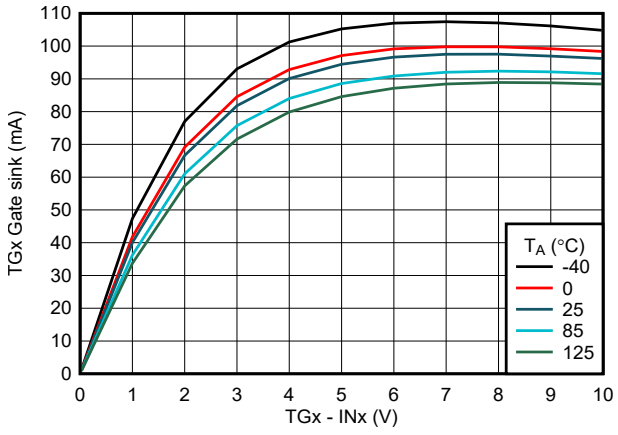

図 5-6. Top Side Gate Drive Sink Current vs Gate Drive Voltage

Copyright © 2025 Texas Instruments Incorporated

5.7 Typical Characteristics (continued)

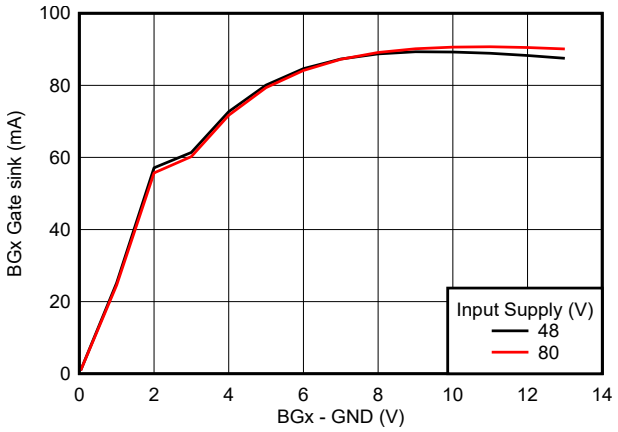

図 5-7. Bottom Side Gate Drive Sink Current vs Gate Drive Voltage

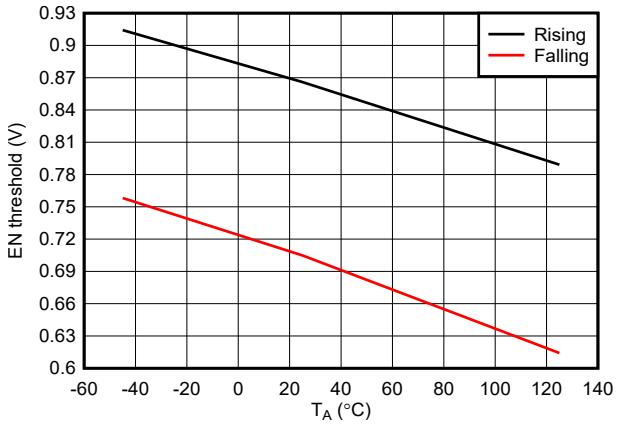

図 5-8. Enable Threshold vs Temperature

Copyright © 2025 Texas Instruments Incorporated

6 Parameter Measurement Information

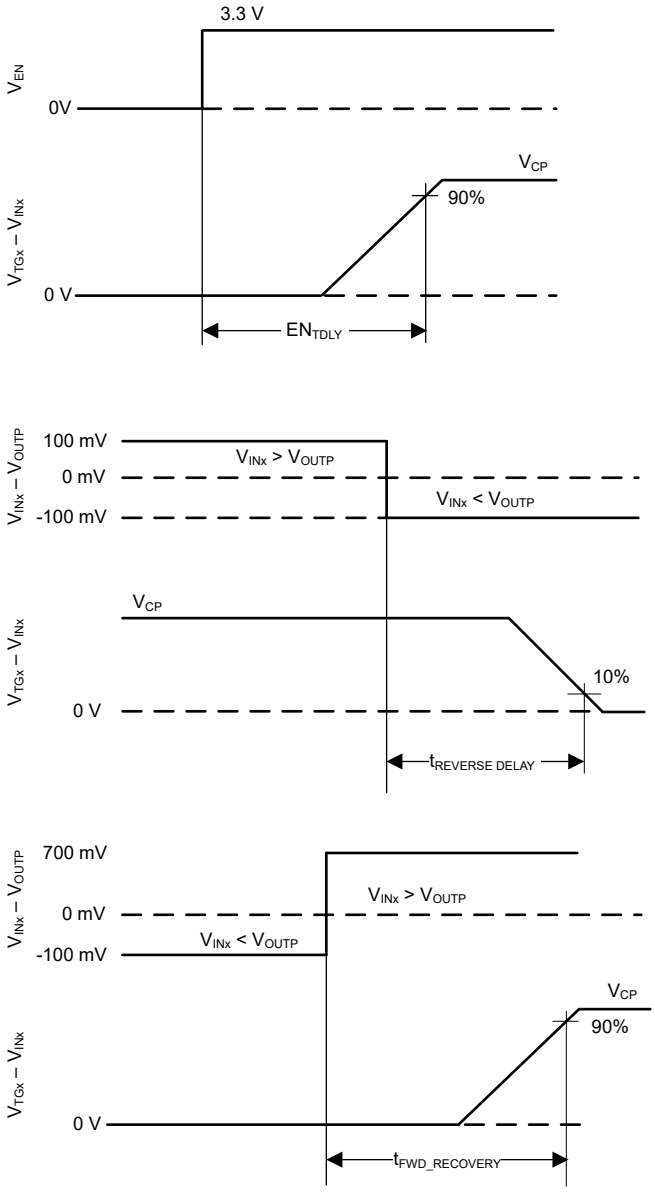

図 6-1. Timing Waveforms

7 Detailed Description

7.1 Overview

The LM74680 is an ideal diode bridge controller designed for efficient input voltage rectification in applications requiring high performance and low power loss. It operates by driving four external N-channel MOSFETs in a full-bridge configuration. During startup, the MOSFET body diodes conduct and rectify the input voltage. Once the output voltage is above the power-on-reset threshold (V_{OUTP_PORR}) and the EN pin voltage is above high threshold (V_{EN_IH}) , the LM74680 transitions to active control mode.

In active mode, the controller utilizes an internal charge pump to drive the MOSFET gates high, enabling low voltage drop forward conduction. Internal comparators monitor current flow to ensure the MOSFETs are turned off during reverse current conditions, effectively emulating an ideal diode bridge. The LM74680 is well suited for power critical applications such as video surveillance systems, building automation, and other electronics requiring robust and efficient power delivery.

7.2 Functional Block Diagram

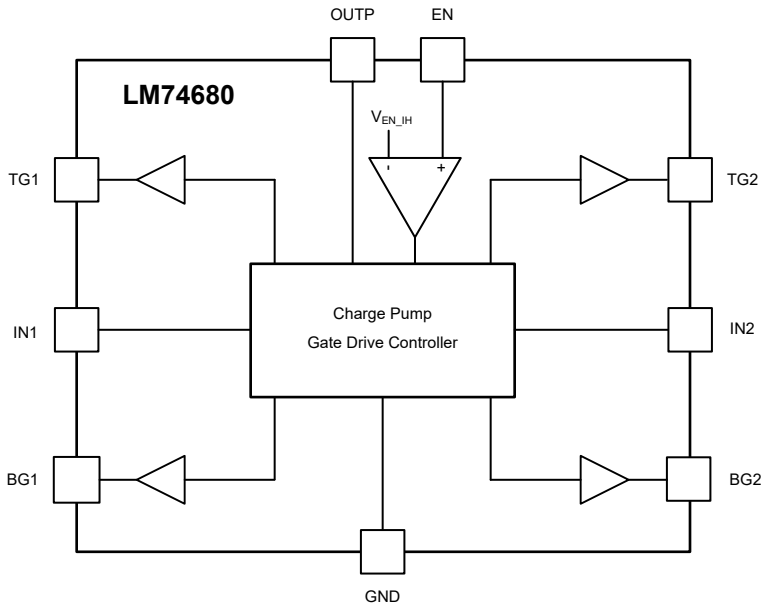

Copyright © 2025 Texas Instruments Incorporated

7.3 Feature Description

7.3.1 Input and Output Voltage

LM74680 supports power sources with wide input voltage range enabling both AC power source (12VAC, 24VAC) or a DC polarity-agnostic power source to be connected to its IN1 and IN2 pins. LM74680 is designed to operate with IN1 and IN2 designed to vary from 80V to –80V.

The OUTP pin is used to power the LM74680 internal circuitry, typically drawing I_Q when enabled and I_{SHDN} when disabled. If the OUTP pin voltage is greater than the power-on-reset rising threshold, then LM74680 operates in either shutdown mode or active mode in accordance with the EN pin voltage. LM74680 supports an OUTP voltage up to 80V during normal operation and can withstand voltage transients up to 100V ensuring protection against surges.

7.3.2 Charge Pump

The internal charge pump supplies the voltage necessary to drive the gate of the external N-channel MOSFETs. The charge pump is activated once the EN pin voltage is above the specified input high threshold, V_{EN_IH}. If EN pin is pulled low, then the charge pump remains disabled. By enabling and disabling the charge pump, the operating quiescent current of the LM74680 can be optimized as per system requirements.

7.3.3 Gate Drivers

The gate drivers are used to control the external N-Channel MOSFETs by setting the GATE to SOURCE voltage to the corresponding mode of operation. The FETs on the top side Q1 and Q2 are driven by gates TG1 and TG2 and the FETs on the bottom side Q3 and Q4 are driven by gates BG1 and BG2 respectively.

The internal charge pump powers the top side gate drivers and depending on the DRAIN to SOURCE voltage of each MOSFET, LM74680 has three defined modes of operation the gate driver operates under which are forward regulation, full conduction mode and reverse current protection. These modes are described in more detail in セクション 7.4.1.1, セクション 7.4.1.2, and セクション 7.4.2. 図 7-1 depicts how the modes of operation vary according to the DRAIN to SOURCE voltage. The threshold between forward regulation and conduction modes is when the DRAIN to SOURCE voltage is V_{TG_REG}. The threshold between forward regulation mode and reverse current protection mode is when the DRAIN to SOURCE voltage is V_{REV}.

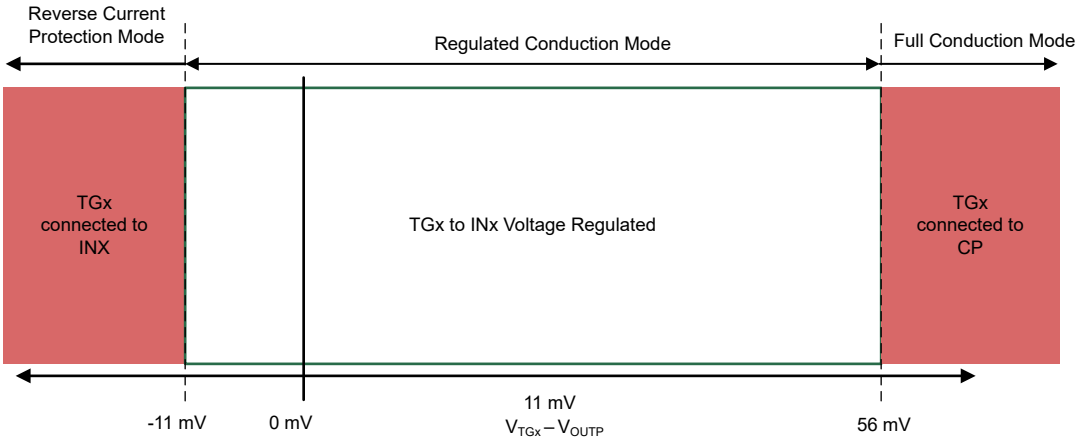

図 7-1. Gate Driver Mode Transitions

The bottom-side gate drivers of the LM74680 are powered directly from the IN1 or IN2 voltage and operate in two distinct modes which are forward full conduction and reverse current blocking. These gate drivers are controlled by the following logic to ensure efficient power flow and protection against reverse current.

- BG1 is enabled and in full conduction when the voltage at IN1 is greater than that GND+2V and is disabled when IN1 falls below IN2 to block reverse current flow.
- Similarly, BG2 is enabled when IN2 exceeds GND+2V and is disabled when IN2 is lower than IN1.

Copyright © 2025 Texas Instruments Incorporated

7.3.4 Enable

The LM74680 has an enable pin, EN. The enable pin allows for the gate driver to be either enabled or disabled by an external signal. If the EN pin voltage is greater than the rising threshold, the gate driver and charge pump are activated as described in セクション 7.3.3 and セクション 7.3.2. If the enable pin voltage is less than the input low threshold, the charge pump and gate drivers are disabled placing the LM74680 in shutdown mode.

If the application doesn't need external ON/OFF control, the EN pin can be connected directly to OUTP pin.

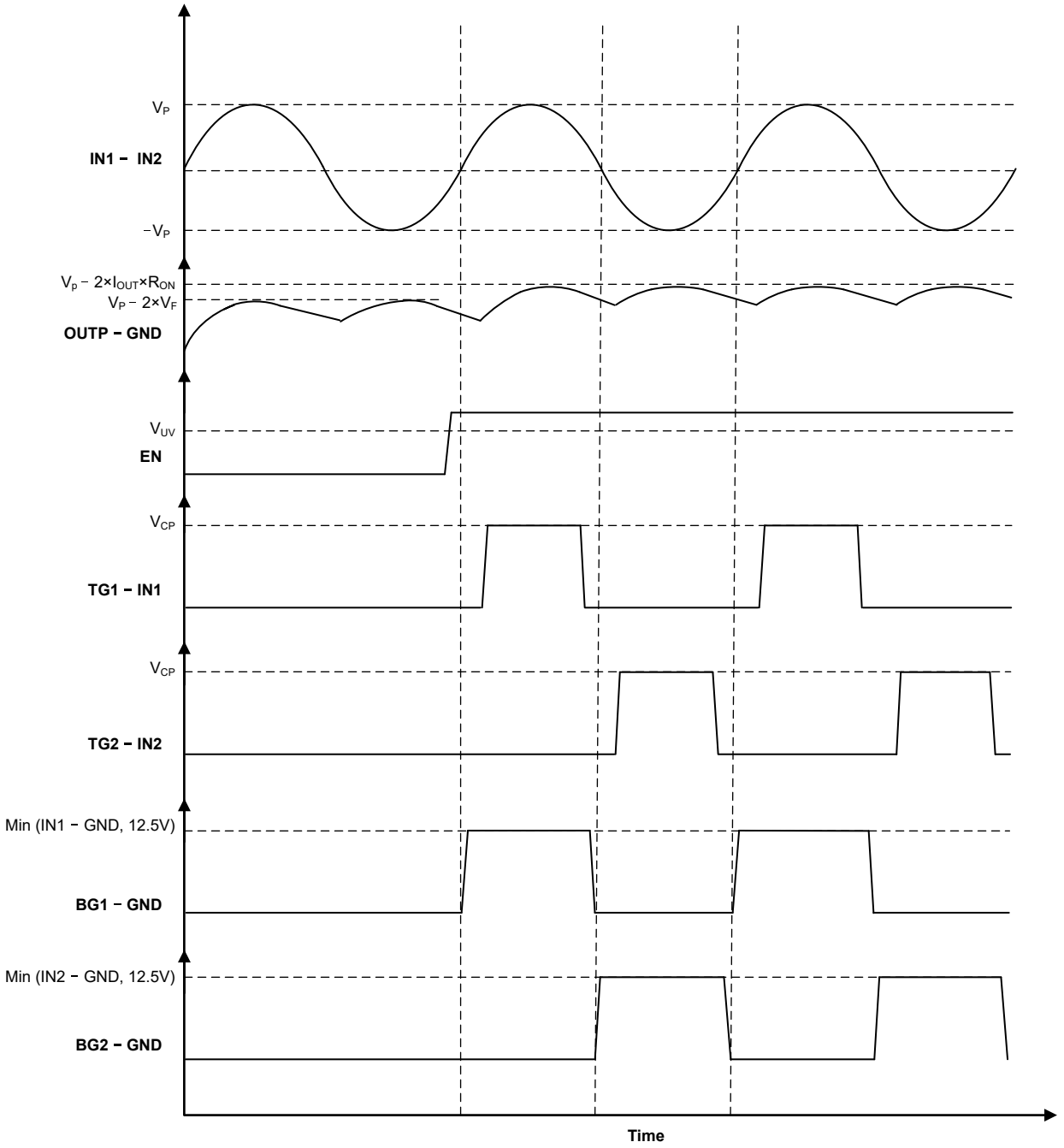

図 7-2. Enable Response and Gate Drivers Operation

Copyright © 2025 Texas Instruments Incorporated

7.4 Device Functional Modes

7.4.1 Conduction Mode

Conduction mode occurs when the top gate drivers are enabled and there are two regions of operating in this mode based on the source to drain voltage of the FETs driven by LM74680. The modes are described in セクション 7.4.1.1 and セクション 7.4.1.2.

7.4.1.1 Regulated Conduction Mode

For the LM74680 to operate its top gates TG1 and TG2 in regulated conduction mode, the gate driver must be enabled as described in セクション 7.3.3 and the current from source to drain of the external MOSFET must be within the range to result in an INx to OUTP voltage drop of V_{REV} to V_{TG_FC}. During forward regulation mode, the INx to OUTP voltage is regulated to V_{TG_REG} by adjusting the gate to source voltage. This closed loop regulation scheme enables graceful turn-off of the MOSFET at very light loads and ensures zero DC reverse current flow.

7.4.1.2 Full Conduction Mode

For the LM74680 to operate its top gates TG1 and TG2 in full conduction mode the gate driver must be enabled as described in セクション 7.3.3 and the current from source to drain of the external MOSFET must be large enough to result in an INx to OUTP voltage drop of greater than V_{TG_FC}. If these conditions are achieved the GATE pin is internally connected to the charge pump resulting in the INx to OUTP voltage being equal to $V_{TGx} – V_{INx}$. By connecting the internal charge pump to GATE the external MOSFET $R_{DS(ON)}$ is minimized reducing the power loss of the external MOSFET when forward currents are large.

7.4.2 Reverse Current Protection Mode

For the LM74680 to operate in reverse current protection mode, the gate driver must be enabled as described in セクション 7.3.3 and the current of the external MOSFET must be flowing from the drain to the source. When the INx to OUTP voltage is typically less than V_{REV}, reverse current protection mode is entered and the FET gates is internally connected to the source. This connection of the TGx to INx pin disables the external MOSFET. The body diode of the MOSFET blocks any reverse current from flowing from the drain to source.

Copyright © 2025 Texas Instruments Incorporated

8 Application and Implementation

注

以下のアプリケーション情報は、TI の製品仕様に含まれるものではなく、TI ではその正確性または完全性を保証いたしません。個々の目的に対する製品の適合性については、お客様の責任で判断していただくことになります。お客様は自身の設計実装を検証しテストすることで、システムの機能を確認する必要があります。

8.1 Application Information

The LM74680 drives four external N-channel MOSFETs in a diode bridge configuration, making it ideal for rectifying an AC power supplies or polarity-agnostic DC power supplies. By replacing traditional diodes with MOSFETs, the device minimizes conduction losses, resulting in improved thermal performance and increased overall system efficiency. This makes it suitable for applications such as video door bell, industrial automation, HVAC systems, and other AC-powered equipment where low power loss and high reliability are critical. The schematic for a 24V AC input application is shown in 図 8-1 where the LM74680 is driving the high side MOSFETs Q1, Q2 and low side MOSFETs Q3, Q4 in diode bridge configuration.

8.2 Typical Application

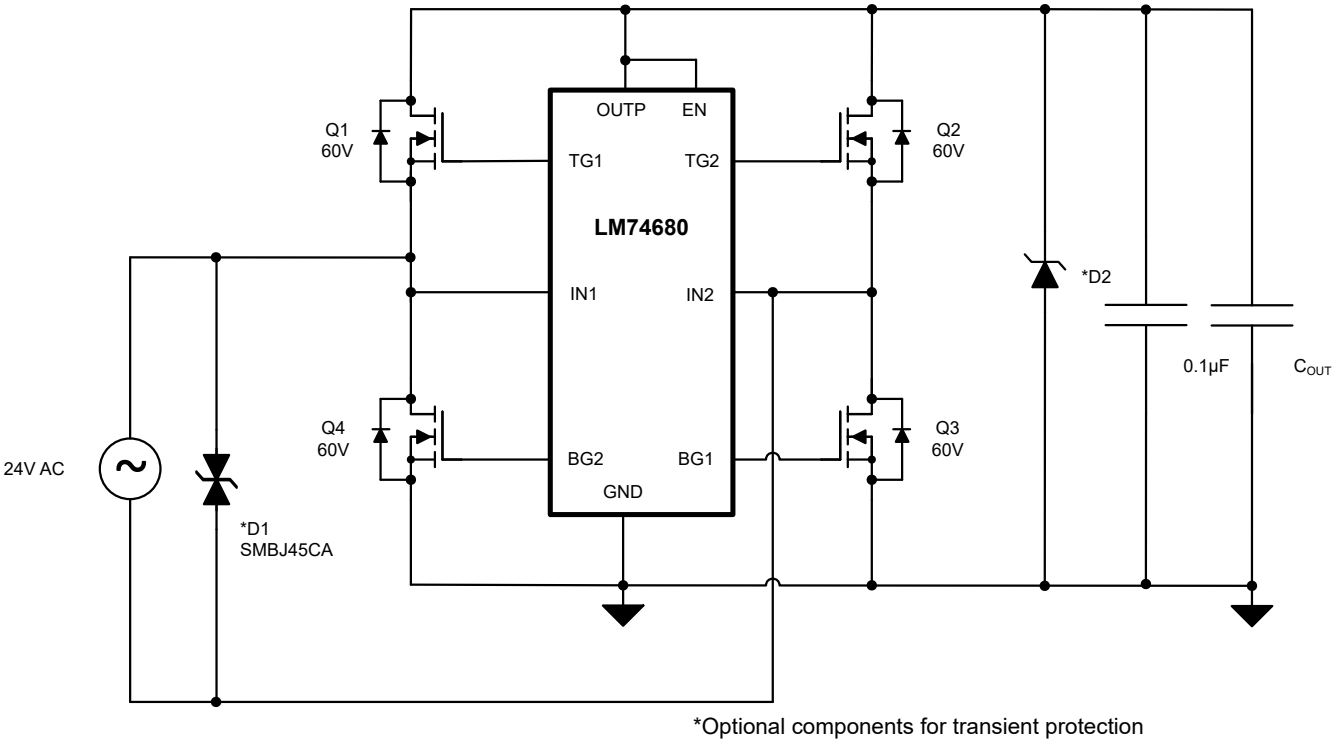

図 8-1. Typical Application Circuit

8.2.1 Design Requirements

A design example, with system design parameters listed in 表 8-1 is presented.

表 8-1. Design Parameters

DESIGN PARAMETER	EXAMPLE VALUE
Input voltage and range	24V AC ±10%
Maximum load current	2A
Output voltage ripple	$10V_{p-p}$

Copyright © 2025 Texas Instruments Incorporated

8.2.2 Detailed Design Procedure

8.2.2.1 Design Considerations

- Input operating voltage range, including line transients
- Maximum load current
- Maximum ripple of output voltage

8.2.2.2 MOSFET Selection

The important MOSFET electrical parameters are the maximum continuous drain current I_D, the maximum drain-to-source voltage $V_{DS(MAX)}$, the maximum gate-to-source voltage $V_{GS(MAX)}$, and the drain-to-source ON resistance $R_{DS(ON)}$.

The $V_{DS(MAX)}$ rating of the MOSFET must be high enough to withstand the highest differential voltage seen in the application, including any anticipated transients during fault conditions. For a 24V AC system, a MOSFET with a voltage rating of 60V is recommended. The LM74680 can drive a maximum gate-to-source voltage of 13.8V. A MOSFET with a minimum $V_{GS(MAX)}$ rating of 15V should be selected. For MOSFETs with lower V_{GS} ratings, a Zener diode can be used to clamp the voltage to a safe level.

The MOSFET I_D rating must exceed the maximum continuous load current to ensure reliable operation under full load conditions. Additionally, the MOSFET thermal resistance should be considered to ensure the junction temperature (T_J) remains within safe limits under the expected maximum power dissipation including the initial inrush phase when the output capacitors are charged through the MOSFETs body diode. This helps maintain reliability and performance in the application.

To reduce the MOSFET conduction losses, the lowest possible $R_{DS(ON)}$ is preferred, but selecting a MOSFET based on low $R_{DS(ON)}$ may not always be beneficial. Higher $R_{DS(ON)}$ will provide increased voltage information to LM74680 reverse comparator at a lower reverse current. Reverse current detection is better with increased $R_{DS(ON)}$. Choosing a MOSFET with $R_{DS(ON)}$ that develops <30mV forward voltage drop at maximum current is a good starting point. Usually, $R_{DS(ON)}$ increases drastically below 4.5V V_{GS} and $R_{DS(ON)}$ is highest when V_{GS} is close to MOSFET V_{th}. For stable regulation at light load conditions, it is recommended to operate the MOSFET close to 4.5V V_{GS}, that is, much higher than the MOSFET gate threshold voltage. It is recommended to choose MOSFET gate threshold voltage V_{th} of 2.5V to 3.5V maximum. Choosing a lower V_{th} MOSFET also reduces the turn ON time.

CSD88537ND Dual N-channel MOSFET from Texas Instruments is selected to meet this 24VAC bridge rectifier design and it is rated at:

- $V_{DS(MAX)}$: 60V
- $V_{GS(MAX)}$: ±20V
- $R_{DS(ON)}$: 12.5mΩ (typical) and 15mΩ (maximum) at 10V V_{GS}

8.2.2.3 Output Capacitance

A minimum ceramic capacitor of 0.1µF is recommended to be placed across the OUTP and GND pins as close to the LM74680 as possible for decoupling. Additional output capacitance C_{OUT} may be required to ensure that the rectified output voltage remains within the recommended operating range of the LM74680 and also to meet the output voltage ripple requirements of downstream circuitry depending on the system's tolerance.

The additional capacitance required between OUTP and GND is based on the downstream power demands and the allowable voltage ripple. C_{OUT} in the hundreds to thousands of microfarads is common. A good starting point is selecting C_{OUT} such that:

$$C_{OUT} \geq I_{LOAD} / (V_{RIPPLE} \times 2 \times Freq) \quad (1)$$

Where,

- I_{LOAD} is the average output load current
- V_{RIPPLE} is the maximum tolerable output ripple voltage
- Freq is the frequency of the input AC source

Copyright © 2025 Texas Instruments Incorporated

For example, in a 50Hz, 24V AC application where the load current is 1A and the tolerable ripple is 1V, choose C_{OUT} ≥ 1A/(10V × 2 × 50Hz) = 1mF.

8.2.3 Application Curves

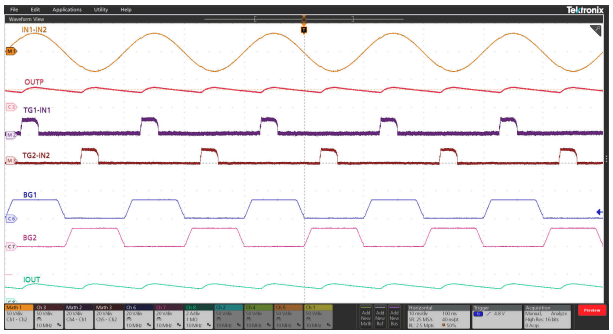

図 8-2. 24V AC Input, C_{OUT} = 1mF, 30W Load, Steady State

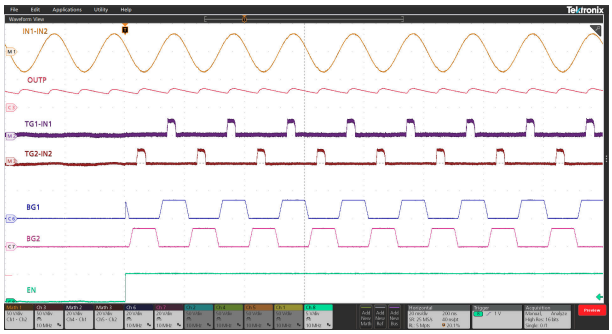

図 8-3. 24V AC Input, C_{OUT} = 1mF, 30W Load, EN Toggle High

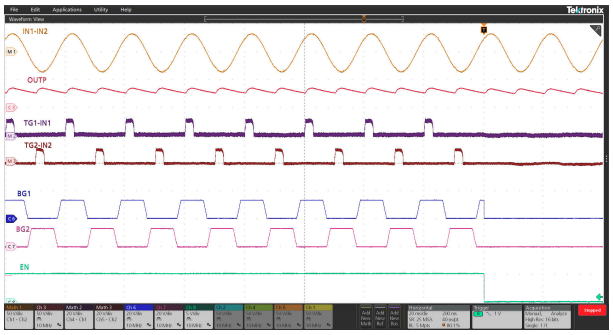

図 8-4. 24V AC Input, C_{OUT} = 1mF, 30W Load, EN Toggle Low

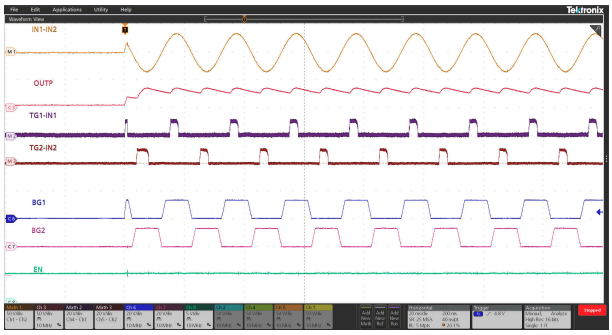

図 8-5. 24V AC Input, C_{OUT} = 1mF, 30W Load, EN High, Input Hotplug

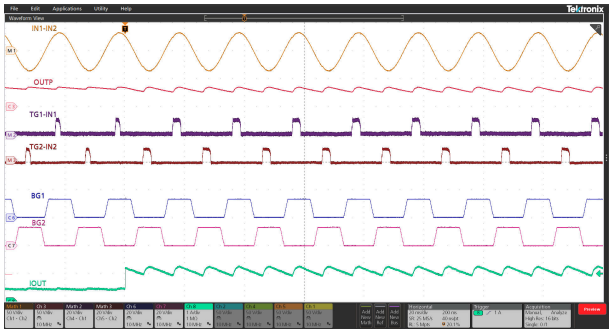

図 8-6. 24V AC Input, C_{OUT} = 1mF, Load Step From 10W to 30W

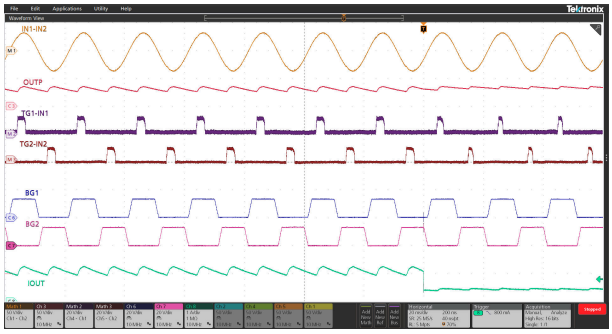

図 8-7. 24V AC Input, C_{OUT} = 1mF, Load Step From 30W to 10W

Copyright © 2025 Texas Instruments Incorporated

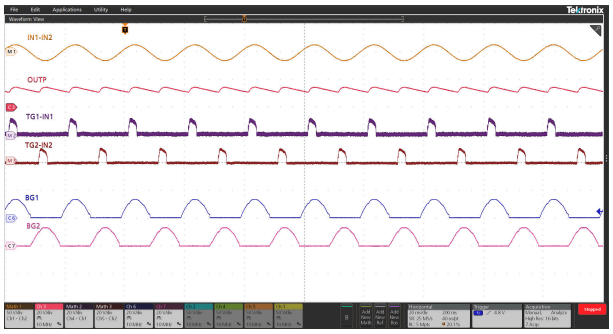

図 8-8. 10V AC Input, C_{OUT} = 1mF, Steady State

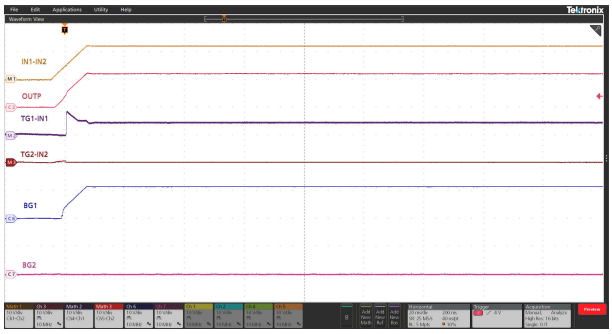

図 8-9. 12V DC Input, Startup

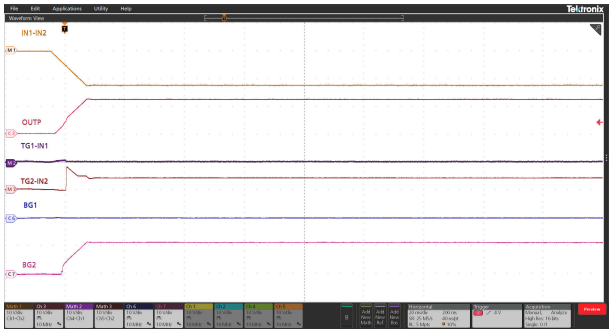

図 8-10. –12V DC Input, Startup

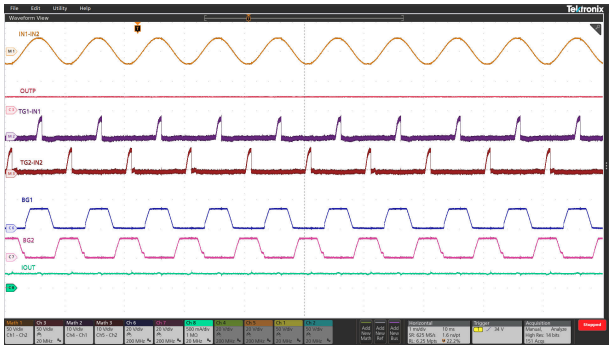

図 8-11. 24V AC Input, Freq = 1kHz, C_{OUT} = 1mF, Steady State

8.3 Power Supply Recommendations

8.3.1 Transient Protection

The TVS at input or output is not required for the LM74680 to operate, but it may be required to clamp the voltage transients caused by lightning, switching surges, or power disturbances that can exceed the voltage ratings of MOSFETs and the controller possibly causing damage. A TVS diode protects against such events by clamping the transient voltages to safe levels. For 24V AC systems, a bidirectional TVS with a standoff voltage above the AC peak and a clamping voltage below the MOSFET's maximum rating is recommended. In well-regulated applications with minimal transient risks, a TVS diode may not be necessary.

To avoid output voltage buildup during input hotplug conditions due to coupling from MOSFET gate capacitance using MOSFETs with input capacitance of at least 1nF is recommended. If the input capacitance of the selected MOSFET is less than 1nF, add a 1nF capacitor between the gate and source of the top-side MOSFETs.

8.4 Layout

8.4.1 Layout Guidelines

- Place the decoupling capacitor close to the OUTP pin and IC GND.
- For the top side MOSFETs, connect the INx, TGx, and OUTP pins of LM74680 close to the MOSFET SOURCE, GATE, and DRAIN pins.
- The high current path is through the MOSFETs, therefore it is important to use thick and short traces for the source and drain of the MOSFET to minimize resistive losses.
- The TGx and BGx pins of the LM74680 must be connected to the respective MOSFET gate with a short trace.
- Place transient suppression components close to LM74680.
- Obtaining acceptable performance with alternate layout schemes is possible, however the layout shown in セクション 8.4.2 is intended as a guideline and to produce good results.

Copyright © 2025 Texas Instruments Incorporated

8.4.2 Layout Example

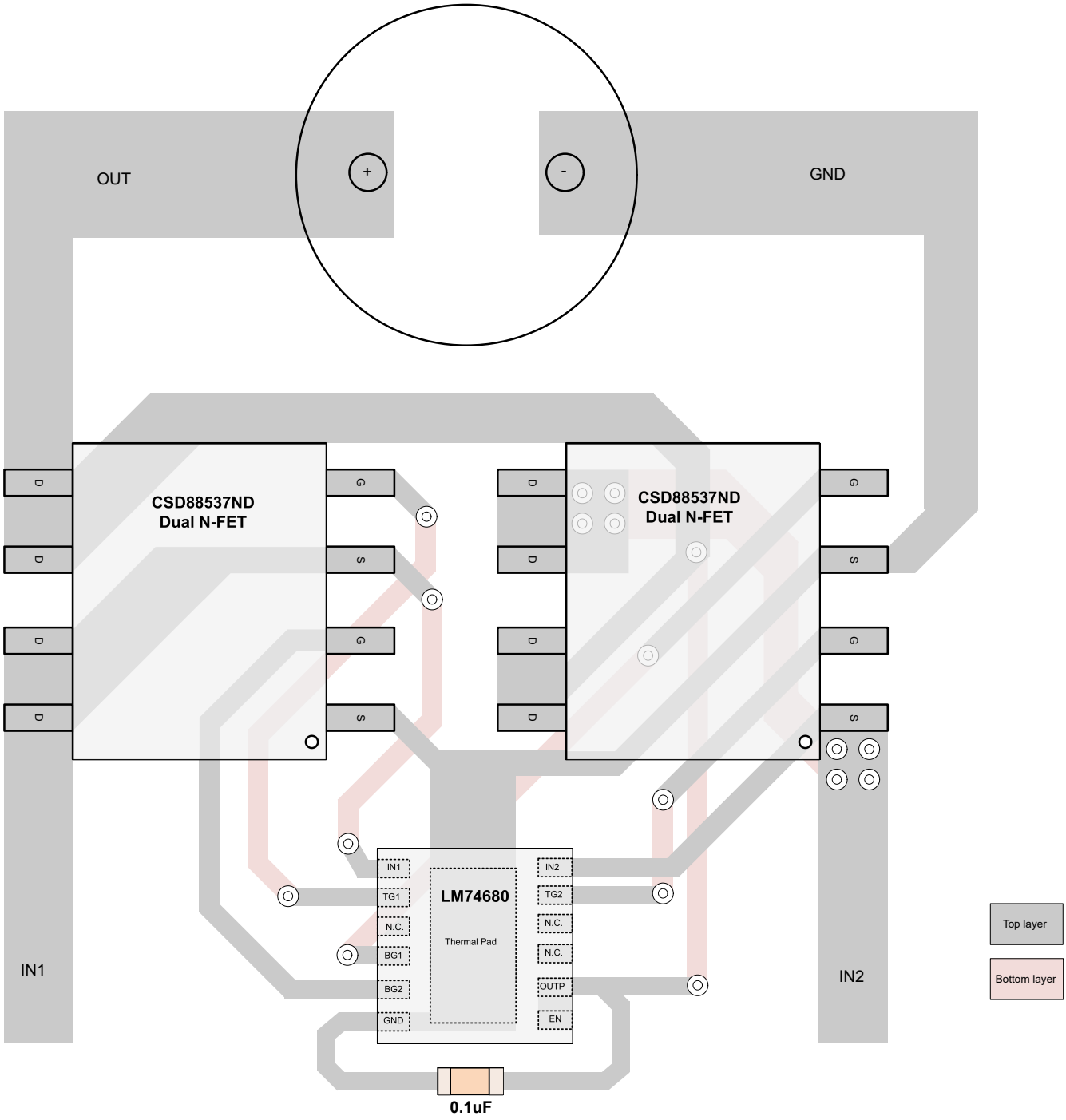

図 8-12. LM74680 Example Layout

Copyright © 2025 Texas Instruments Incorporated

9 Device and Documentation Support

9.1 ドキュメントの更新通知を受け取る方法

ドキュメントの更新についての通知を受け取るには、www.tij.co.jp のデバイス製品フォルダを開いてください。[通知] をクリックして登録すると、変更されたすべての製品情報に関するダイジェストを毎週受け取ることができます。 変更の詳細については、改訂されたドキュメントに含まれている改訂履歴をご覧ください。

9.2 サポート・リソース

テキサス・インスツルメンツ E2E™ サポート・フォーラムは、エンジニアが検証済みの回答と設計に関するヒントをエキスパートから迅速かつ直接得ることができる場所です。既存の回答を検索したり、独自の質問をしたりすることで、設計で必要な支援を迅速に得ることができます。

リンクされているコンテンツは、各寄稿者により「現状のまま」提供されるものです。これらはテキサス・インスツルメンツの仕様を構成するものではなく、必ずしもテキサス・インスツルメンツの見解を反映したものではありません。テキサス・インスツルメンツの使用条件を参照してください。

9.3 Trademarks

テキサス・インスツルメンツ E2E™ is a trademark of Texas Instruments.
すべての商標は、それぞれの所有者に帰属します。

9.4 静電気放電に関する注意事項



この IC は、ESD によって破損する可能性があります。テキサス・インスツルメンツは、IC を取り扱う際には常に適切な注意を払うことを推奨します。正しい取り扱いおよび設置手順に従わない場合、デバイスを破損するおそれがあります。

ESD による破損は、わずかな性能低下からデバイスの完全な故障まで多岐にわたります。精密な IC の場合、パラメータがわずかに変化するだけで公表されている仕様から外れる可能性があるため、破損が発生しやすくなっています。

9.5 用語集

テキサス・インスツルメンツ用語集　　この用語集には、用語や略語の一覧および定義が記載されています。

10 Revision History

資料番号末尾の英字は改訂を表しています。その改訂履歴は英語版に準じています。

DATE	REVISION	NOTES
December 2024	*	Initial Release

11 Mechanical, Packaging, and Orderable Information

The following pages include mechanical, packaging, and orderable information. This information is the most current data available for the designated devices. This data is subject to change without notice and revision of this document. For browser-based versions of this data sheet, refer to the left-hand navigation.

Copyright © 2025 Texas Instruments Incorporated

PACKAGING INFORMATION

Orderable part number	Status (1)	Material type (2)	Package | Pins	Package qty | Carrier	RoHS (3)	Lead finish/ Ball material (4)	MSL rating/ Peak reflow (5)	Op temp (°C)	Part marking (6)
LM74680DRRR	Active	Production	WSON (DRR) | 12	5000 | LARGE T&R	Yes	NIPDAU	Level-2-260C-1 YEAR	-40 to 125	L74680
LM74680DRRR.A	Active	Production	WSON (DRR) | 12	5000 | LARGE T&R	Yes	NIPDAU	Level-2-260C-1 YEAR	See LM74680DRRR	L74680

(1) **Status:** For more details on status, see our product life cycle.

(2) **Material type:** When designated, preproduction parts are prototypes/experimental devices, and are not yet approved or released for full production. Testing and final process, including without limitation quality assurance, reliability performance testing, and/or process qualification, may not yet be complete, and this item is subject to further changes or possible discontinuation. If available for ordering, purchases will be subject to an additional waiver at checkout, and are intended for early internal evaluation purposes only. These items are sold without warranties of any kind.

(3) **RoHS values:** Yes, No, RoHS Exempt. See the TI RoHS Statement for additional information and value definition.

(4) **Lead finish/Ball material:** Parts may have multiple material finish options. Finish options are separated by a vertical ruled line. Lead finish/Ball material values may wrap to two lines if the finish value exceeds the maximum column width.

(5) **MSL rating/Peak reflow:** The moisture sensitivity level ratings and peak solder (reflow) temperatures. In the event that a part has multiple moisture sensitivity ratings, only the lowest level per JEDEC standards is shown. Refer to the shipping label for the actual reflow temperature that will be used to mount the part to the printed circuit board.

(6) **Part marking:** There may be an additional marking, which relates to the logo, the lot trace code information, or the environmental category of the part.

Multiple part markings will be inside parentheses. Only one part marking contained in parentheses and separated by a "~" will appear on a part. If a line is indented then it is a continuation of the previous line and the two combined represent the entire part marking for that device.

Important Information and Disclaimer: The information provided on this page represents TI's knowledge and belief as of the date that it is provided. TI bases its knowledge and belief on information provided by third parties, and makes no representation or warranty as to the accuracy of such information. Efforts are underway to better integrate information from third parties. TI has taken and continues to take reasonable steps to provide representative and accurate information but may not have conducted destructive testing or chemical analysis on incoming materials and chemicals. TI and TI suppliers consider certain information to be proprietary, and thus CAS numbers and other limited information may not be available for release.

In no event shall TI's liability arising out of such information exceed the total purchase price of the TI part(s) at issue in this document sold by TI to Customer on an annual basis.

TAPE AND REEL INFORMATION

REEL DIMENSIONS

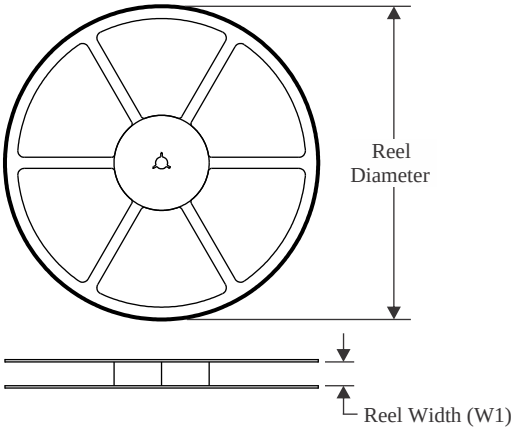

TAPE DIMENSIONS

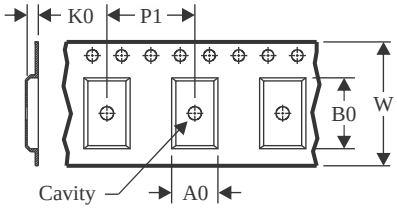

A0	Dimension designed to accommodate the component width
B0	Dimension designed to accommodate the component length
K0	Dimension designed to accommodate the component thickness
W	Overall width of the carrier tape
P1	Pitch between successive cavity centers

QUADRANT ASSIGNMENTS FOR PIN 1 ORIENTATION IN TAPE

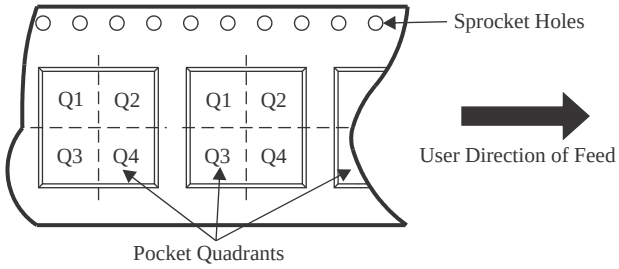

*All dimensions are nominal

Device	Package Type	Package Drawing	Pins	SPQ	Reel Diameter (mm)	Reel Width W1 (mm)	A0 (mm)	B0 (mm)	K0 (mm)	P1 (mm)	W (mm)	Pin1 Quadrant
LM74680DRRR	WSON	DRR	12	5000	330.0	12.4	3.3	3.3	1.1	8.0	12.0	Q2

TAPE AND REEL BOX DIMENSIONS

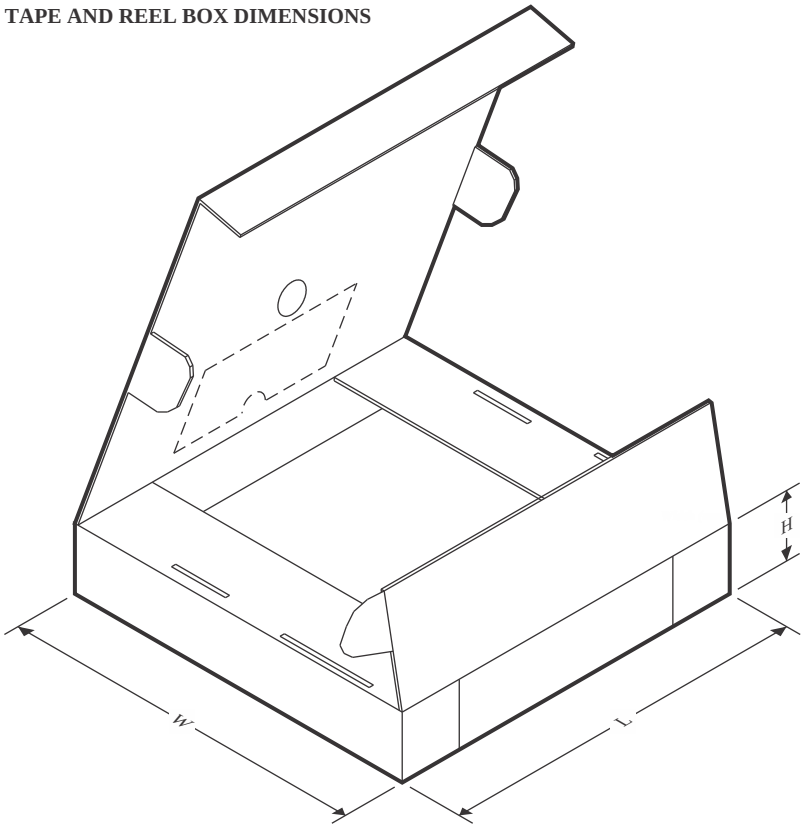

*All dimensions are nominal

Device	Package Type	Package Drawing	Pins	SPQ	Length (mm)	Width (mm)	Height (mm)
LM74680DRRR	WSON	DRR	12	5000	360.0	360.0	36.0

GENERIC PACKAGE VIEW

DRR 12

WSON - 0.8 mm max height

3 x 3, 0.5 mm pitch

PLASTIC SMALL OUTLINE - NO LEAD

This image is a representation of the package family, actual package may vary.
Refer to the product data sheet for package details.

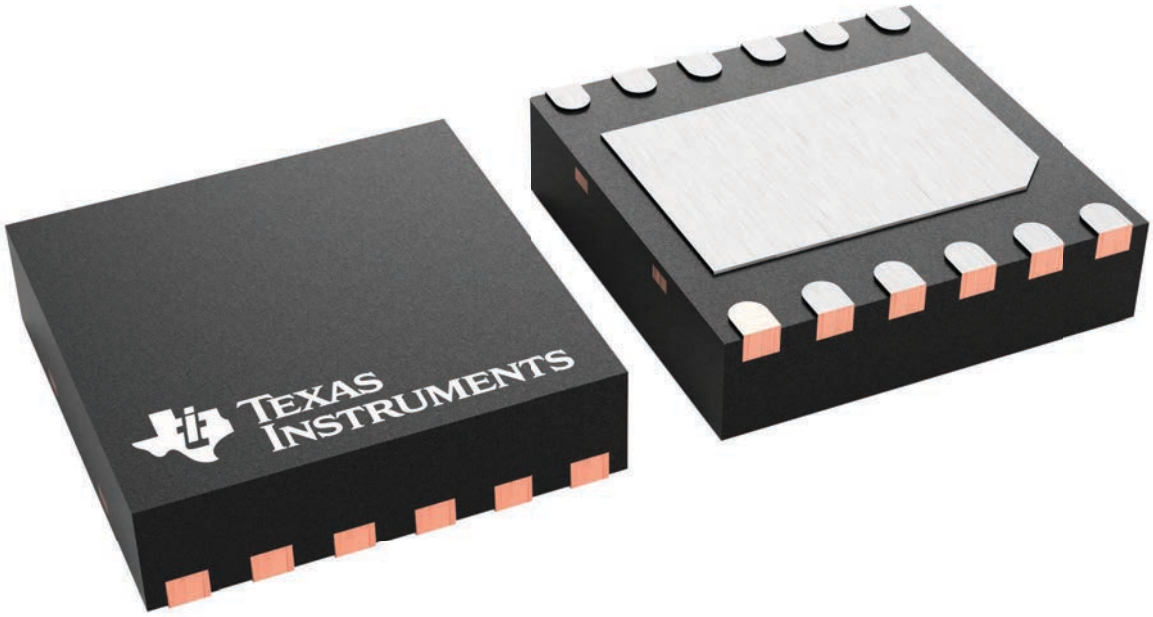

4223490/B

PACKAGE OUTLINE

DRR0012G

WSON - 0.8 mm max height

PLASTIC SMALL OUTLINE - NO LEAD

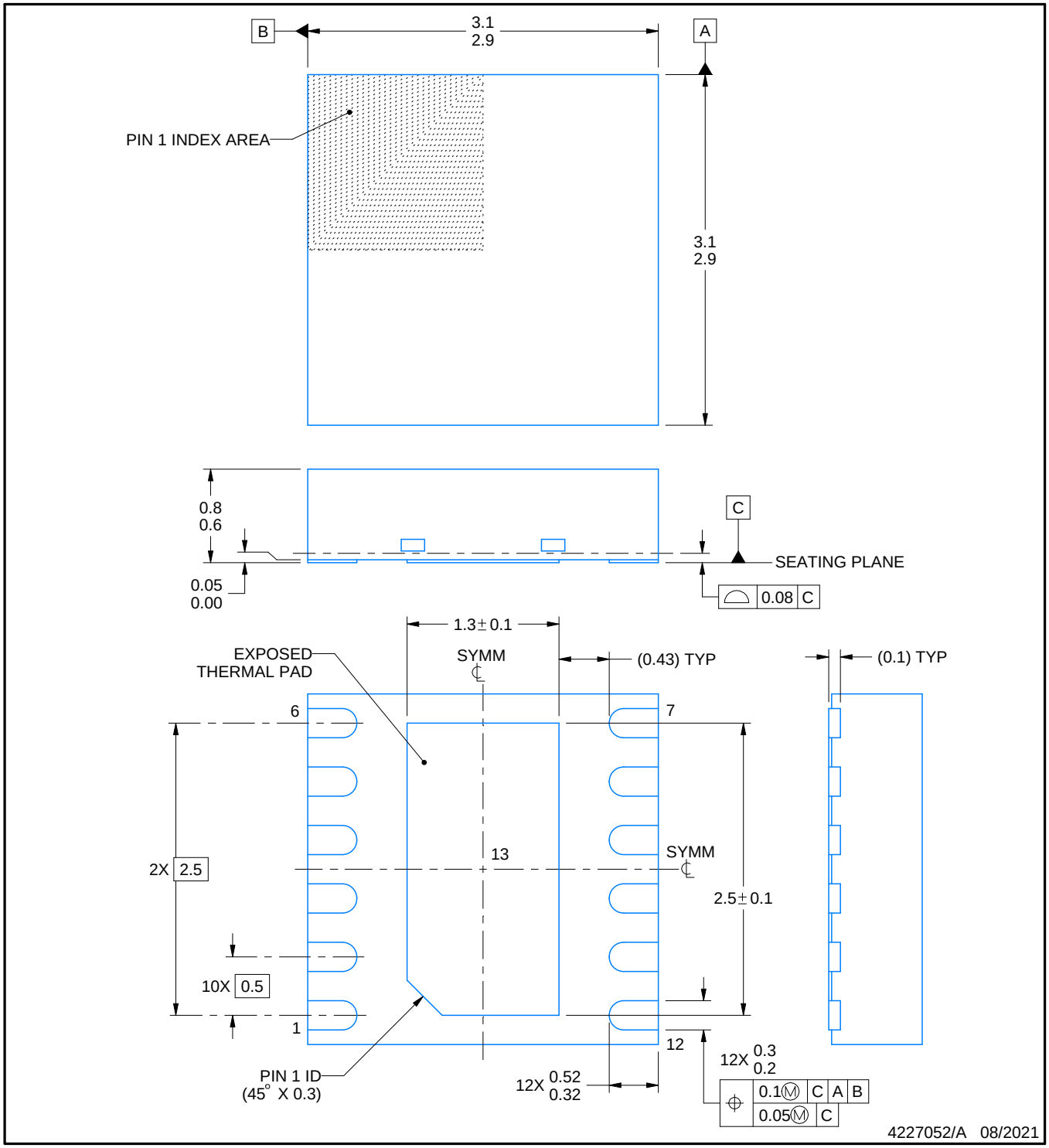

NOTES:

1. All linear dimensions are in millimeters. Any dimensions in parenthesis are for reference only. Dimensioning and tolerancing per ASME Y14.5M.
2. This drawing is subject to change without notice.
3. The package thermal pad must be soldered to the printed circuit board for thermal and mechanical performance.

EXAMPLE BOARD LAYOUT

DRR0012G

WSON - 0.8 mm max height

PLASTIC SMALL OUTLINE - NO LEAD

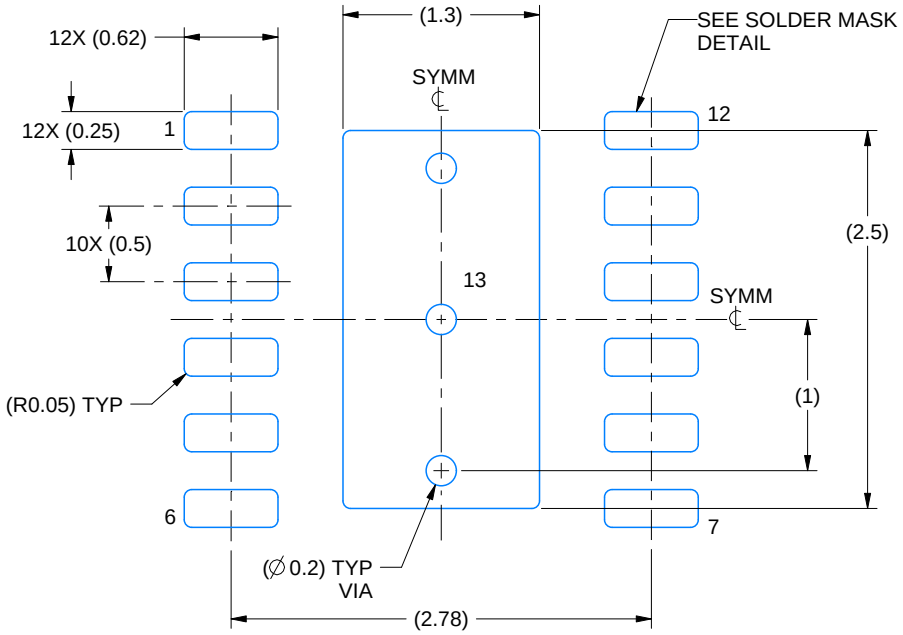

LAND PATTERN EXAMPLE
EXPOSED METAL SHOWN
SCALE: 20X

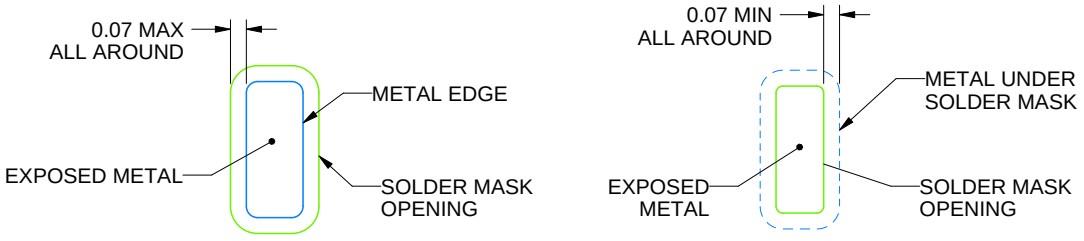

SOLDER MASK DETAILS

4227052/A 08/2021

NOTES: (continued)

4. This package is designed to be soldered to a thermal pad on the board. For more information, see Texas Instruments literature number SLUA271 (www.ti.com/lit/slua271).
5. Vias are optional depending on application, refer to device data sheet. If any vias are implemented, refer to their locations shown on this view. It is recommended that vias under paste be filled, plugged or tented.

EXAMPLE STENCIL DESIGN

DRR0012G

WSON - 0.8 mm max height

PLASTIC SMALL OUTLINE - NO LEAD

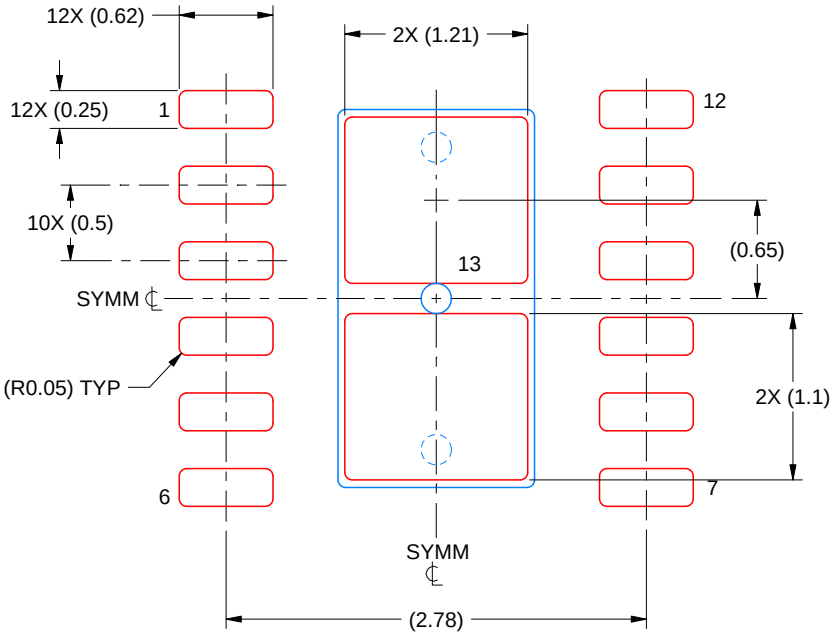

SOLDER PASTE EXAMPLE
BASED ON 0.125 MM THICK STENCIL
SCALE: 20X

EXPOSED PAD 13
82% PRINTED SOLDER COVERAGE BY AREA UNDER PACKAGE

4227052/A 08/2021

NOTES: (continued)

6. Laser cutting apertures with trapezoidal walls and rounded corners may offer better paste release. IPC-7525 may have alternate design recommendations.

重要なお知らせと免責事項

TI は、技術データと信頼性データ (データシートを含みます)、設計リソース (リファレンス デザインを含みます)、アプリケーションや設計に関する各種アドバイス、Web ツール、安全性情報、その他のリソースを、欠陥が存在する可能性のある「現状のまま」提供しており、商品性および特定目的に対する適合性の黙示保証、第三者の知的財産権の非侵害保証を含むいかなる保証も、明示的または黙示的にかかわらず拒否します。

これらのリソースは、TI 製品を使用する設計の経験を積んだ開発者への提供を意図したものです。(1) お客様のアプリケーションに適した TI 製品の選定、(2) お客様のアプリケーションの設計、検証、試験、(3) お客様のアプリケーションに該当する各種規格や、その他のあらゆる安全性、セキュリティ、規制、または他の要件への確実な適合に関する責任を、お客様のみが単独で負うものとします。

上記の各種リソースは、予告なく変更される可能性があります。これらのリソースは、リソースで説明されている TI 製品を使用するアプリケーションの開発の目的でのみ、TI はその使用をお客様に許諾します。これらのリソースに関して、他の目的で複製することや掲載することは禁止されています。TI や第三者の知的財産権のライセンスが付与されている訳ではありません。お客様は、これらのリソースを自身で使用した結果発生するあらゆる申し立て、損害、費用、損失、責任について、TI およびその代理人を完全に補償するものとし、TI は一切の責任を拒否します。

TI の製品は、 TI の販売条件 、 TI の総合的な品質ガイドライン 、 ti.com または TI 製品などに関連して提供される他の適用条件に従い提供されます。TI がこれらのリソースを提供することは、適用される TI の保証または他の保証の放棄の拡大や変更を意味するものではありません。 TI がカスタム、またはカスタマー仕様として明示的に指定していない限り、TI の製品は標準的なカタログに掲載される汎用機器です。

お客様がいかなる追加条項または代替条項を提案する場合も、TI はそれらに異議を唱え、拒否します。

Copyright © 2026, Texas Instruments Incorporated

最終更新日：2025 年 10 月