LMC603x 低消費電力 2.7V 単一電源 CMOS オペアンプ

1 特長

- 特に記述のない限り標準値
- DSBGA パッケージの LMC6035
- 2.7V、3V、5V、15V の性能を仕様規定
- 2kΩ および 600Ω 負荷について動作を規定
- 広い動作範囲:2.0V～15.5V
- 超低入力電流:20fA
- レール ツー レールの出力スイング
  - 600Ω 時:2.7V で各レールから 200mV
  - 100kΩ 時:2.7V で各レールから 5mV
- 高い電圧ゲイン:126 dB
- 広い入力同相電圧範囲
  - -0.1V～+2.3V (V_S = 2.7V 時)
- 低歪:10kHz 時に 0.01%
- LMC6035 デュアル LMC6036 クワッド
- DSBGA の考慮事項については、AN-1112 (文書番号 SNVA009) を参照してください。
- AEC-Q100 グレード 3 認証済み (LMC6035-Q1)

2 アプリケーション

- フィルタ
- ハイ インピーダンスのバッファまたはプリアンプ
- バッテリ動作の電子機器
- 医療用計測装置

3 概要

LMC6035 と LMC6036 (LMC603x) は、600Ω 負荷でのレール ツー レール出力スイングに対応できる安価な低電圧オペアンプです。LMC6035 は超小型 SMD パッケージ技術を使用したチップ サイズ パッケージ (8 バンプ DSBGA) で供給されます。どちらのデバイスも単一電源動作が可能であり、2.7V、3V、5V、15V の電源電圧で仕様が規定されています。2.7V の電源電圧は、直列に接続された 3 つの NiCd または NiMH バッテリの寿命電圧 (0.9V/セル) に対応しているため、LMC603x は携帯型および充電式システムに最適です。また、これらのデバイスは、仕様で規定された 2.7V よりも低い電源電圧でも正常に動作しますが、その場合、仕様よりも多少性能が劣化します。この挙動により、2.7V よりも大幅に小さい電圧でも適切に動作する安全領域が得られます。入力電流が非常に小さいこれらのデバイスは低消費電力アクティブ フィルタ アプリケーションに最適です。小さな入力バイアス電流により、より高い値の抵抗とより小さい値のコンデンサが使えるためです。また、優れた駆動能力を備えた LMC603x は、低電圧システムの幅広いアプリケーションに最適です。

製品情報

部品番号	チャネル数	パッケージ (1)
LMC6035	デュアル	D (SOIC、8)
		DGK (VSSOP、8)
		YAF (DSBGA、8)
		YZR (DSBGA、8)
LMC6036	クワッド	D (SOIC、14)
		PW (TSSOP、14)

(1) 詳細については、セクション 10 を参照してください。

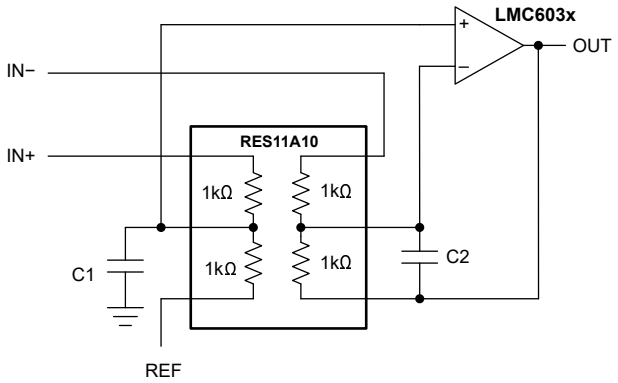

RES11 を使った差動アンプのアプリケーション

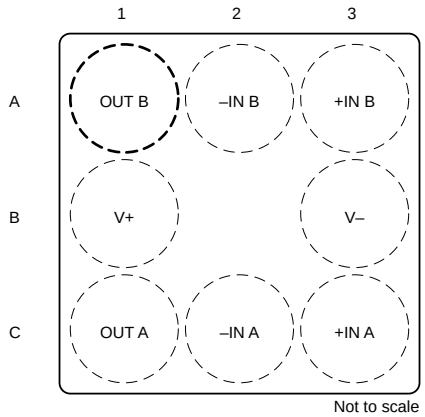

8 バンプ DSBGA パッケージ (バンプ側が下) — パッケージ番号 YAF0008 を参照

このリソースの元の言語は英語です。翻訳は概要を便宜的に提供するもので、自動化ツール (機械翻訳) を使用していることがあり、TI では翻訳の正確性および妥当性につきましては一切保証いたしません。実際の設計などの前には、ti.com で必ず最新の英語版をご参照くださいますようお願いいたします。

Table of Contents

1 特長 ... 1
2 アプリケーション ... 1
3 概要 ... 1
4 Pin Configuration and Functions ... 3
5 Specifications ... 5
5.1 Absolute Maximum Ratings ... 5
5.2 ESD Ratings ... 5
5.3 Recommended Operating Conditions ... 5
5.4 Thermal Information: LMC6035 ... 6
5.5 Thermal Information: LMC6036 ... 6
5.6 Electrical Characteristics ... 7
5.7 Typical Characteristics ... 9
6 Detailed Description ... 16
6.1 Overview ... 16
6.2 Functional Block Diagram ... 16
7 Application and Implementation ... 17
7.1 Application Information ... 17
7.2 Typical Applications ... 18
7.3 Layout ... 23
8 Device and Documentation Support ... 25
8.1 ドキュメントの更新通知を受け取る方法 ... 25
8.2 サポート・リソース ... 25
8.3 静電気放電に関する注意事項 ... 25
8.4 用語集 ... 25
9 Revision History ... 25
10 Mechanical, Packaging, and Orderable Information ... 26

Copyright © 2025 Texas Instruments Incorporated

4 Pin Configuration and Functions

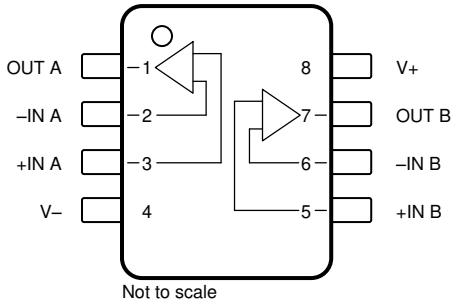

図 4-1. LMC6035 D Package, 8-Pin SOIC, and DGK Package, 8-Pin VSSOP (Top View)

表 4-1. Pin Functions: LMC6035 D and DGK Packages

PIN		TYPE	DESCRIPTION
NAME	NO.		
–IN A	2	Input	Inverting input channel A
–IN B	6	Input	Inverting input channel B
+IN A	3	Input	Noninverting input channel A
+IN B	5	Input	Noninverting input channel B
OUT A	1	Output	Output channel A
OUT B	7	Output	Output channel B
V–	4	Power	Negative supply
V+	8	Power	Positive supply

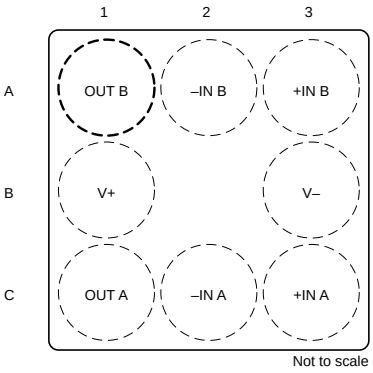

図 4-2. LMC6035 YZR Package, 8-Pin DSBGA and YAF Package, 8-Pin DSBGA (Top View)

表 4-2. Pin Functions: LMC6035 YZR and YAF packages

PIN		TYPE	DESCRIPTION
NAME	NO.		
–IN A	C2	Input	Inverting input channel A
–IN B	A2	Input	Inverting input channel B
+IN A	C3	Input	Noninverting input channel A
+IN B	A3	Input	Noninverting input channel B
OUT A	C1	Output	Output channel A
OUT B	A1	Output	Output channel B
V–	B3	Power	Negative supply

Copyright © 2025 Texas Instruments Incorporated

表 4-2. Pin Functions: LMC6035 YZR and YAF packages (続き)

PIN		TYPE	DESCRIPTION
NAME	NO.		
V+	B1	Power	Positive supply

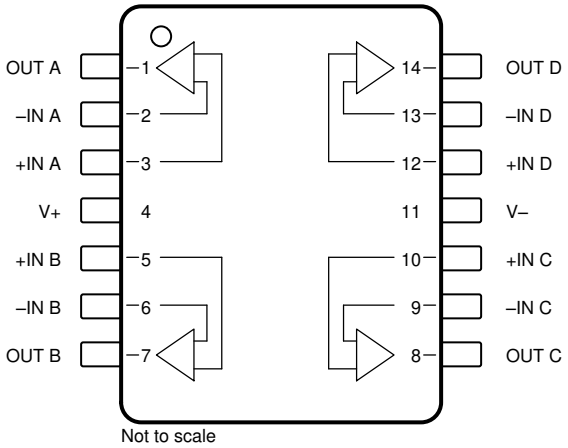

図 4-3. LMC6036 D Package, 14-Pin SOIC, and PW Package, 14-Pin TSSOP (Top View)

表 4-3. Pin Functions: LMC6036

PIN		TYPE	DESCRIPTION
NAME	NO.		
–IN A	2	Input	Inverting input channel A
–IN B	6	Input	Inverting input channel B
–IN C	9	Input	Inverting input channel C
–IN D	13	Input	Inverting input channel D
+IN A	3	Input	Noninverting input channel A
+IN B	5	Input	Noninverting input channel B
+IN C	10	Input	Noninverting input channel C
+IN D	12	Input	Noninverting input channel D
OUT A	1	Output	Output channel A
OUT B	7	Output	Output channel B
OUT C	8	Output	Output channel C
OUT D	14	Output	Output channel D
V–	11	Power	Negative supply
V+	4	Power	Positive supply

Copyright © 2025 Texas Instruments Incorporated

5 Specifications

5.1 Absolute Maximum Ratings

over operating free-air temperature range (unless otherwise noted)(1) (2)

			MIN	MAX	UNIT
	Differential input voltage			±Supply voltage	V
V_S	Supply voltage, V_S = (V+) – (V–)		0	16	V
I_{SC}	Output short circuit	To V+		See(3)	mA
		To V–		See(4)	
	Voltage at input pin		(V–) – 0.3	(V+) + 0.3	V
	Current at input pin			±5	mA
	Current at output pin			±18	mA
	Current at power supply pin			35	mA
T_J	Junction temperature(5)			150	°C
T_{stg}	Storage temperature		–65	150	°C
	Lead temperature (soldering, 10s)			260	°C

(1) Operation outside the *Absolute Maximum Ratings* may cause permanent device damage. *Absolute Maximum Ratings* do not imply functional operation of the device at these or any other conditions beyond those listed under *Recommended Operating Conditions*. If used outside the *Recommended Operating Conditions* but within the *Absolute Maximum Ratings*, the device may not be fully functional, and this may affect device reliability, functionality, performance, and shorten the device lifetime.
(2) If Military/Aerospace specified devices are required, please contact the TI Sales Office/Distributors for availability and specifications.
(3) Do not connect output to V+, when V+ is greater than 13V or reliability is adversely affected.
(4) Applies to both single-supply and split-supply operation. Continuous short circuit operation at elevated ambient temperature can result in exceeding the maximum allowed junction temperature of 150°C. Output currents in excess of ±30mA over long term adversely affect reliability.
(5) The maximum power dissipation is a function of $T_{J(max)}$, θ_{JA}, and T_A. The maximum allowable power dissipation at any ambient temperature is $P_D = (T_{J(max)} – T_A) / \theta_{JA}$

5.2 ESD Ratings

			VALUE	UNIT
$V_{(ESD)}$	Electrostatic discharge	Human-body model (HBM), per ANSI/ESDA/JEDEC JS-001(1)	±3000	V

(1) JEDEC document JEP155 states that 500V HBM allows safe manufacturing with a standard ESD control process.

5.3 Recommended Operating Conditions

over operating free-air temperature range (unless otherwise noted)

			MIN	NOM	MAX	UNIT
V_S	Supply voltage, V_S = (V+) – (V–)	Single supply	2		15.5	V
		Dual supply	±1		±7.75	
T_J	Junction temperature		–40		85	°C

Copyright © 2025 Texas Instruments Incorporated

5.4 Thermal Information: LMC6035

THERMAL METRIC[1]		LMC6035				UNIT
		D (SOIC)	DGK (VSSOP)	YAF (DSBGA)	YZR (DSBGA)	
		8 PINS	8 PINS	8 PINS	8 PINS	
$R_{\theta JA}$	Junction-to-ambient thermal resistance	122.3	149.2	103.1	93.8	°C/W
$R_{\theta JC(top)}$	Junction-to-case(top) thermal resistance	61.4	57.7	0.5	0.5	°C/W
$R_{\theta JB}$	Junction-to-board thermal resistance	70.1	84.1	35.4	26.3	°C/W
ψ_{JT}	Junction-to-top characterization parameter	11.4	4.4	0.3	0.3	°C/W
ψ_{JB}	Junction-to-board characterization parameter	69.1	82.9	35.2	26.2	°C/W
$R_{\theta JC(bot)}$	Junction-to-case(bottom) thermal resistance	N/A	N/A	N/A	N/A	°C/W

(1) For more information about traditional and new thermal metrics, see the *Semiconductor and IC Package Thermal Metrics* application report.

5.5 Thermal Information: LMC6036

THERMAL METRIC[1]		LMC6036		UNIT
		D (SOIC)	PW (TSSOP)	
		14 PINS	14 PINS	
$R_{\theta JA}$	Junction-to-ambient thermal resistance	83.0	99.5	°C/W
$R_{\theta JC(top)}$	Junction-to-case(top) thermal resistance	42.7	31.3	°C/W
$R_{\theta JB}$	Junction-to-board thermal resistance	42.4	56.4	°C/W
ψ_{JT}	Junction-to-top characterization parameter	7.0	1.0	°C/W
ψ_{JB}	Junction-to-board characterization parameter	42.0	55.7	°C/W
$R_{\theta JC(bot)}$	Junction-to-case(bottom) thermal resistance	N/A	N/A	°C/W

(1) For more information about traditional and new thermal metrics, see the *Semiconductor and IC Package Thermal Metrics* application report.

Copyright © 2025 Texas Instruments Incorporated

5.6 Electrical Characteristics

at T_J = +25°C, V+ = 2.7V, V– = 0V, V_{CM} = 1V, V_{OUT} = V+ / 2, and R_L > 1MΩ (unless otherwise noted)

PARAMETER		TEST CONDITIONS		MIN	TYP	MAX	UNIT
OFFSET VOLTAGE							
V_{OS}	Input offset voltage				±0.5	±5	mV
		T_J = –40°C to +85°C				±6	
dV_{OS}/dT	Input offset voltage drift	T_J = –40°C to +85°C			±2.3		µV/°C
PSRR	Power-supply rejection ratio	Positive, 5V ≤ V+ ≤ 15V		63	93		dB
			T_J = –40°C to +85°C	60			
		Negative, 0V ≤ V– ≤ –10V, V_O = 2.5V, V+ = 5V		74	97		
			T_J = –40°C to +85°C	70			
INPUT BIAS CURRENT							
I_B	Input bias current(1)				±20		fA
		T_J = –40°C to +85°C				±90	pA
I_{OS}	Input offset current(1)				±10		fA
		T_J = –40°C to +85°C				±45	pA
NOISE							
e_n	Input voltage noise density	f = 1kHz	V+ = 15V, V_{CM} = V+ / 2		27		nV/√Hz
			V_{CM} = 1V		40		
i_n	Input current noise density	f = 1kHz			6		fA/√Hz
THD	Total harmonic distortion	f= 10kHz, G = –10V/V, R_L = 2kΩ, V_{OUT} = 8V_{pp}, V+ = 10V			0.01		%
INPUT VOLTAGE							
V_{CM}	Common-mode voltage	To positive rail, For CMRR ≥ 40dB		2.0	2.3		V
			T_J = –40°C to +85°C	1.7			
		To negative rail For CMRR ≥ 40dB			–0.1	0.3	
			T_J = –40°C to +85°C			0.5	
		To positive rail, For CMRR ≥ 40dB, V+ = 3V		2.3	2.6		
			T_J = –40°C to +85°C	2.0			
		To negative rail For CMRR ≥ 40dB, V+ = 3V			–0.3	0.1	
			T_J = –40°C to +85°C			0.3	
		To positive rail, For CMRR ≥ 50dB, V+ = 5V		4.2	4.5		
			T_J = –40°C to +85°C	3.9			
		To negative rail For CMRR ≥ 50dB, V+ = 5V			–0.5	–0.2	
			T_J = –40°C to +85°C			0.0	
		To positive rail, For CMRR ≥ 50dB, V+ = 15V		14.0	14.4		
			T_J = –40°C to +85°C	13.7			
		To negative rail For CMRR ≥ 50dB, V+ = 15V			–0.5	–0.2	
			T_J = –40°C to +85°C			0.0	
CMRR	Common-mode rejection ratio	V+ = 15V, 0.7V ≤ V_{CM} ≤ 12.7V		63	96		dB
			T_J = –40°C to +85°C	60			
INPUT IMPEDANCE							
R_{IN}	Input resistance				>10		TΩ

Copyright © 2025 Texas Instruments Incorporated

5.6 Electrical Characteristics (続き)

at T_J = +25°C, V+ = 2.7V, V– = 0V, V_{CM} = 1V, V_{OUT} = V+ / 2, and R_L > 1MΩ (unless otherwise noted)

PARAMETER		TEST CONDITIONS		MIN	TYP	MAX	UNIT
OPEN-LOOP GAIN							
A_{OL}	Open-loop voltage gain	Sourcing, V+ = 15V, V_{CM} = 7.5V, 7.5V ≤ V_O ≤ 11.5V	R_L = 2kΩ to 7.5V		2000		V/mV
			R_L = 600Ω to 7.5V	100	1000		
			R_L = 600Ω to 7.5V, T_J = –40°C to +85°C	75			
		Sinking, V+ = 15V, V_{CM} = 7.5V, 3.5V ≤ V_O ≤ 7.5V	R_L = 2kΩ to 7.5V		500		
			R_L = 600Ω to 7.5V	25	250		
			R_L = 600Ω to 7.5V, T_J = –40°C to +85°C	20			
FREQUENCY RESPONSE							
GBW	Gain bandwidth product				1.4		MHz
SR	Slew rate(2)	V_S = 15V, 10V step			1.5		V/µs
θ_m	Phase margin				48		°
G_m	Gain margin				17		dB
	Crosstalk	Dual and quad channel, V+ = 15V, R_L = 100kΩ to 7.5V, f = 1kHz, V_{OUT} = $12V_{pp}$			130		dB
OUTPUT							
V_O	Voltage output swing	To positive rail, R_L = 2kΩ to 1.35V		2.4	2.62		V
			T_J = –40°C to +85°C	2.2			
		To negative rail, R_L = 2kΩ to 1.35V			0.07	0.2	
			T_J = –40°C to +85°C			0.4	
		To positive rail, R_L = 600Ω to 1.35V		2.0	2.5		
			T_J = –40°C to +85°C	1.8			
		To negative rail, R_L = 600Ω to 1.35V			0.2	0.5	
			T_J = –40°C to +85°C			0.7	
		To positive rail, V+ = 15V, R_L = 2kΩ to 7.5V		14.2	14.8		
			T_J = –40°C to +85°C	13.5			
		To negative rail, V+ = 15V, R_L = 2kΩ to 7.5V			0.12	0.4	
			T_J = –40°C to +85°C			0.5	
		To positive rail, V+ = 15V, R_L = 600Ω to 7.5V		13.5	14.5		
			T_J = –40°C to +85°C	13.0			
		To negative rail, V+ = 15V, R_L = 600Ω to 7.5V			0.36	1.25	
			T_J = –40°C to +85°C			1.50	
I_{SC}	Short-circuit current	Sourcing, V_{OUT} = 0V		4	8		mA
			T_J = –40°C to +85°C	3			
		Sinking, V_{OUT} = 2.7V		3	5		
			T_J = –40°C to +85°C	2			
POWER SUPPLY							
I_Q	Quiescent current	LMC6035, V_{OUT} = 1.5V			0.65	1.6	mA
			T_J = –40°C to +85°C			1.9	
		LMC6036, V_{OUT} = 1.5V			1.3	2.7	
			T_J = –40°C to +85°C			3.0	

(1) Specified by design.
(2) Number specified is the slower of the positive and negative slew rates.

Copyright © 2025 Texas Instruments Incorporated

5.7 Typical Characteristics

at V_S = 2.7V, single supply, and T_A = 25°C (unless otherwise noted)

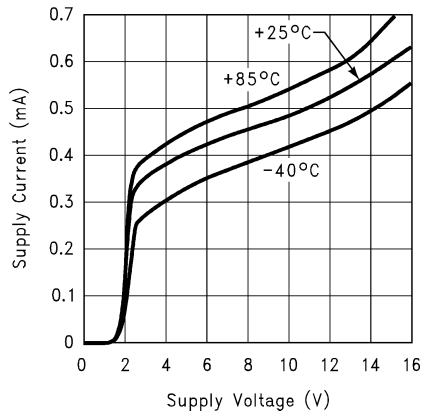

図 5-1. Supply Current vs Supply Voltage (Per Amplifier)

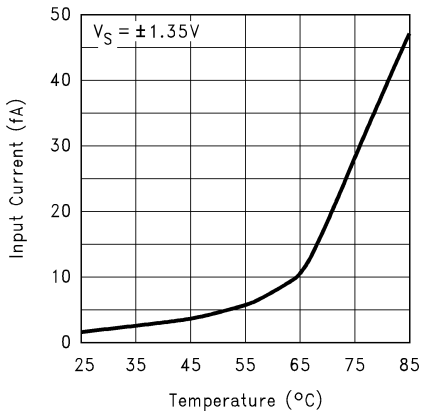

図 5-2. Input Bias Current vs Temperature

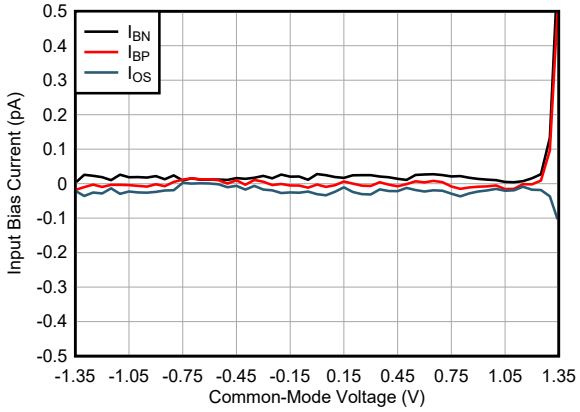

図 5-3. Input Bias Current vs Common-Mode Voltage

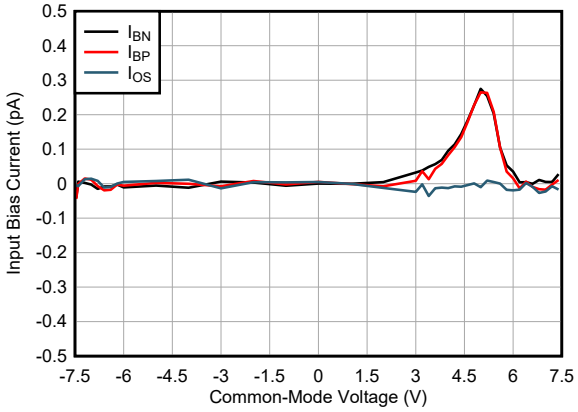

V_S = 15V

図 5-4. Input Current vs Common-Mode Voltage

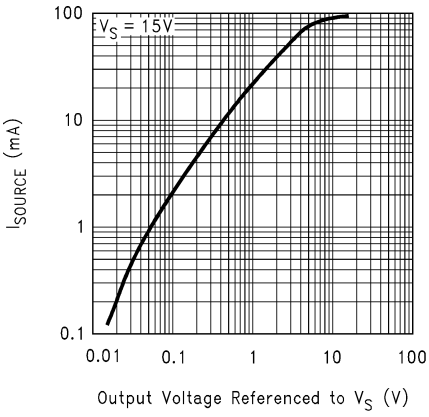

図 5-5. Sourcing Current vs Output Voltage

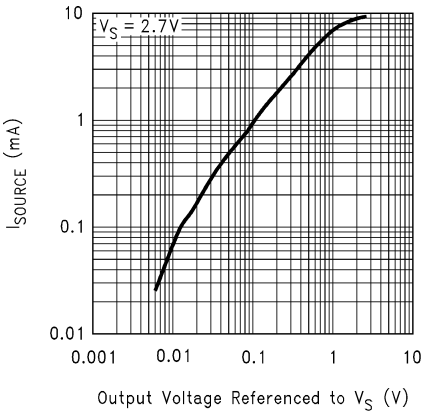

図 5-6. Sourcing Current vs Output Voltage

Copyright © 2025 Texas Instruments Incorporated

5.7 Typical Characteristics (continued)

at V_S = 2.7V, single supply, and T_A = 25°C (unless otherwise noted)

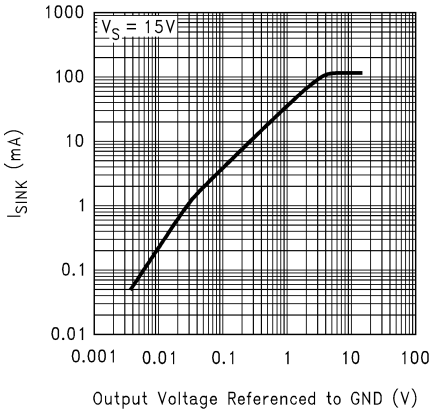

図 5-7. Sinking Current vs Output Voltage

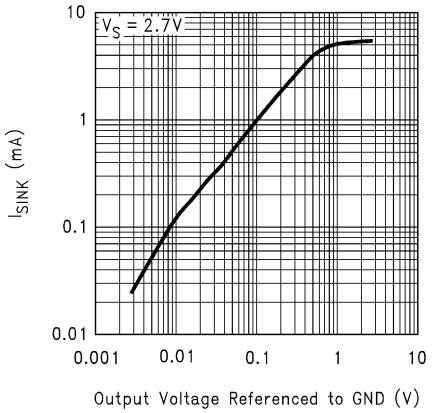

図 5-8. Sinking Current vs Output Voltage

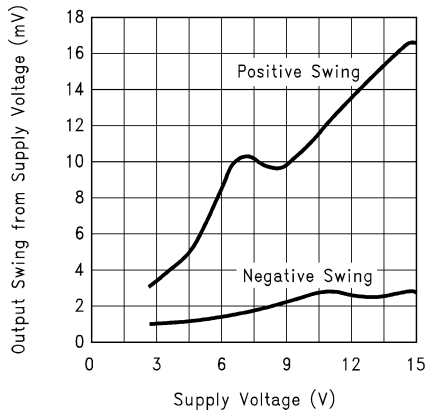

図 5-9. Output Voltage Swing vs Supply Voltage

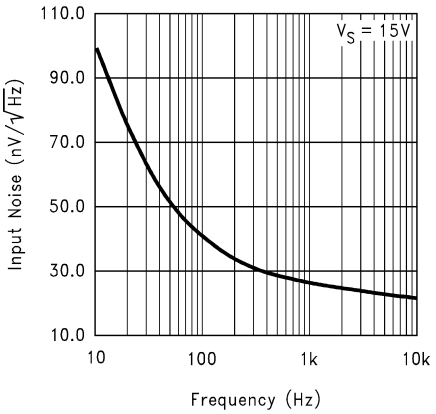

図 5-10. Input Noise vs Frequency

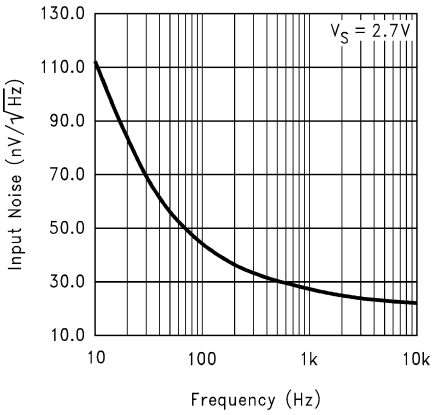

図 5-11. Input Noise vs Frequency

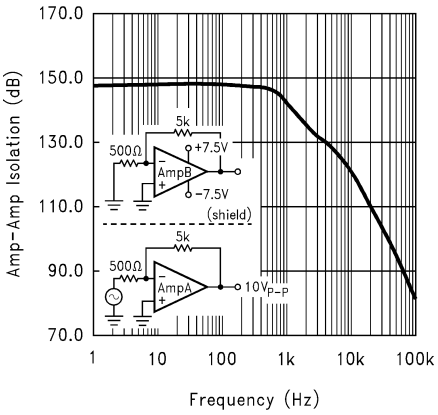

図 5-12. Amp to Amp Isolation vs Frequency

Copyright © 2025 Texas Instruments Incorporated

5.7 Typical Characteristics (continued)

at V_S = 2.7V, single supply, and T_A = 25°C (unless otherwise noted)

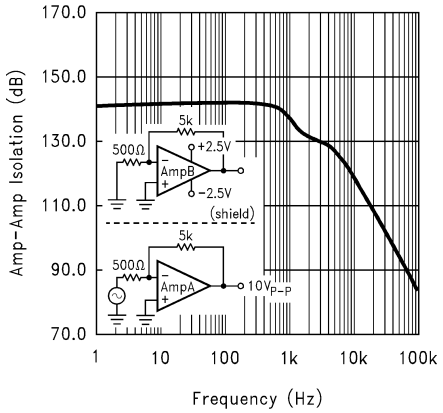

図 5-13. Amp to Amp Isolation vs Frequency

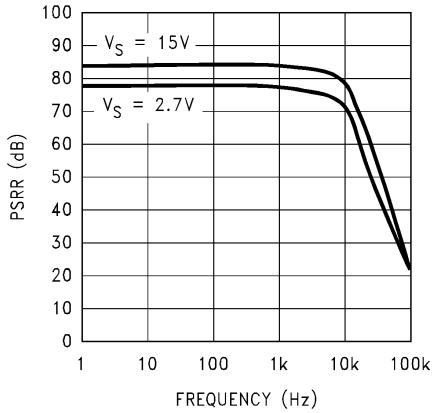

図 5-14. +PSRR vs Frequency

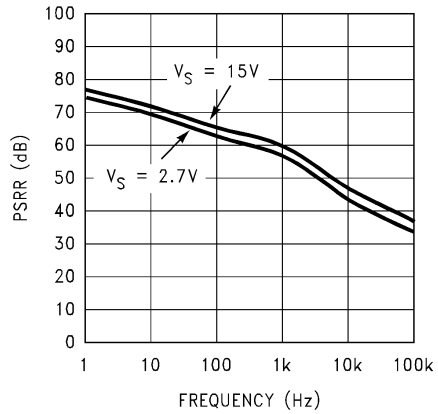

図 5-15. −PSRR vs Frequency

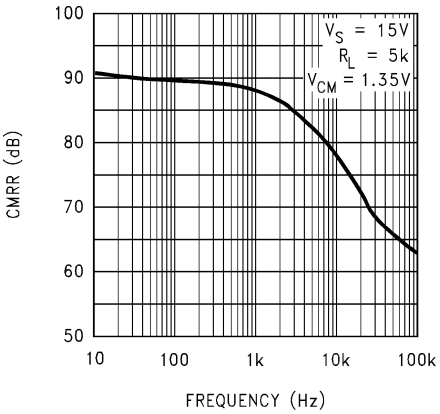

図 5-16. CMRR vs Frequency

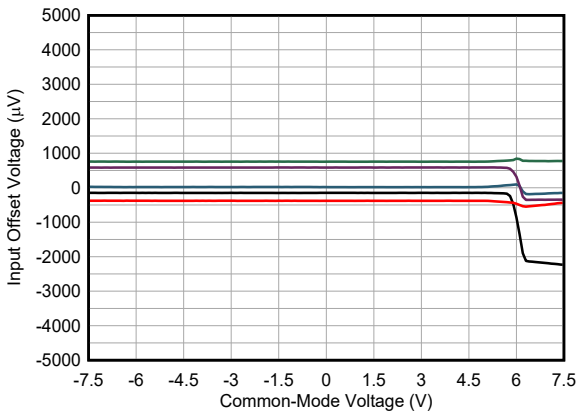

図 5-17. Input Offset Voltage vs Common-Mode Voltage

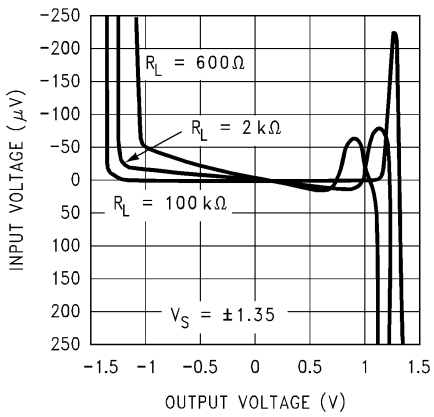

図 5-18. Input Voltage vs Output Voltage

Copyright © 2025 Texas Instruments Incorporated

5.7 Typical Characteristics (continued)

at V_S = 2.7V, single supply, and T_A = 25°C (unless otherwise noted)

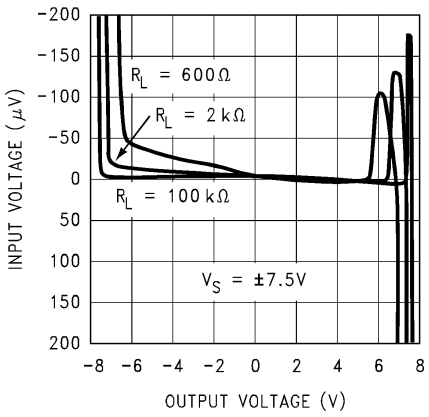

図 5-19. Input Voltage vs Output Voltage

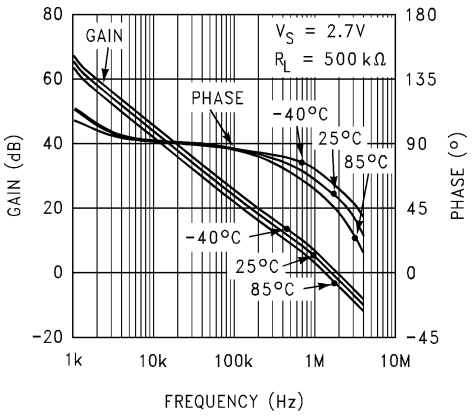

図 5-20. Frequency Response vs Temperature

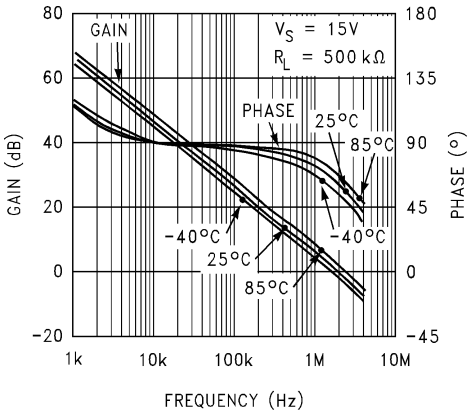

図 5-21. Frequency Response vs Temperature

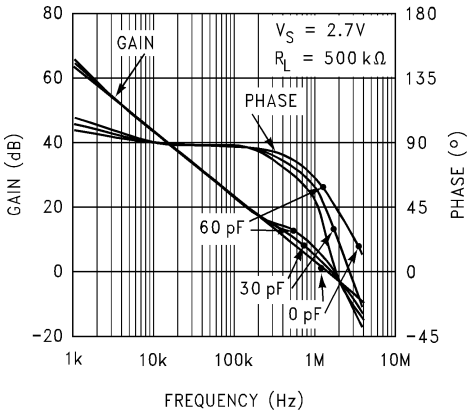

図 5-22. Gain and Phase vs Capacitive Load

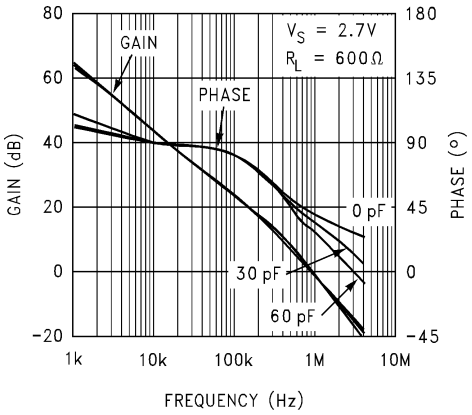

図 5-23. Gain and Phase vs Capacitive Load

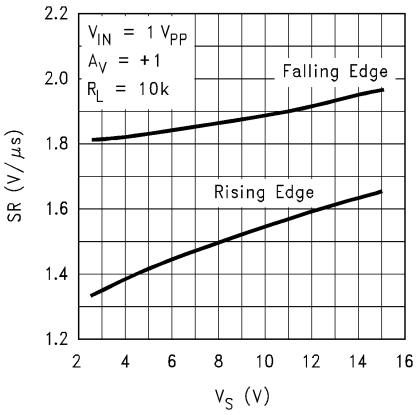

図 5-24. Slew Rate vs Supply Voltage

Copyright © 2025 Texas Instruments Incorporated

5.7 Typical Characteristics (continued)

at V_S = 2.7V, single supply, and T_A = 25°C (unless otherwise noted)

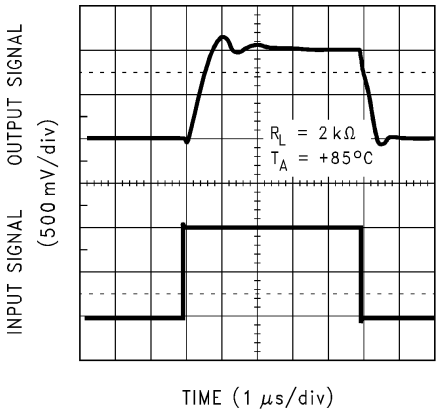

図 5-25. Non-Inverting Large Signal Response

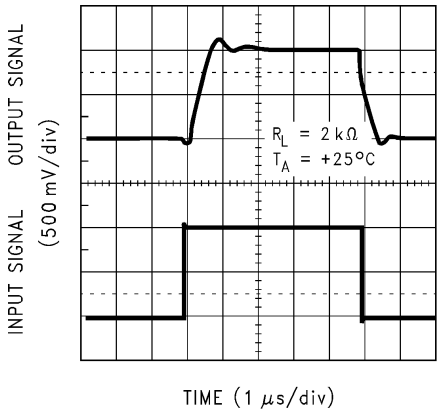

図 5-26. Non-Inverting Large Signal Response

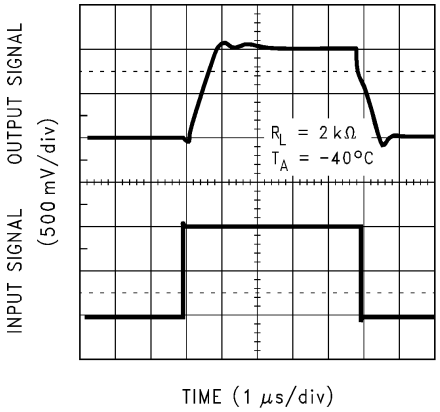

図 5-27. Non-Inverting Large Signal Response

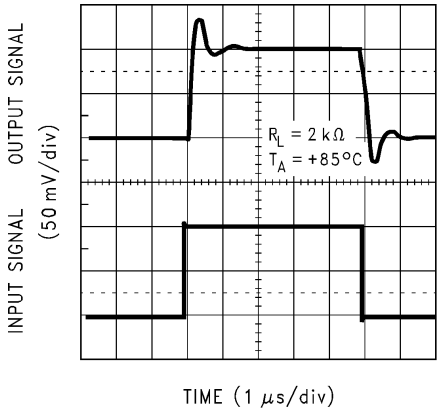

図 5-28. Non-Inverting Small Signal Response

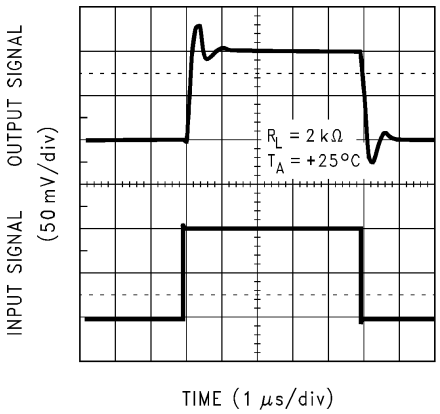

図 5-29. Non-Inverting Small Signal Response

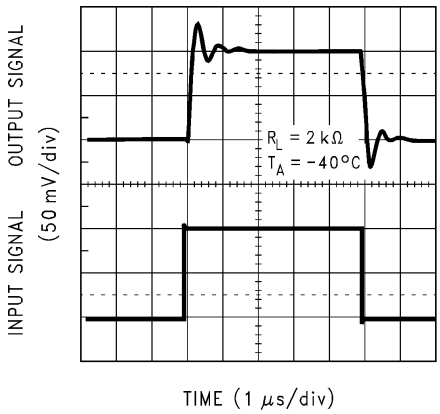

図 5-30. Non-Inverting Large Signal Response

Copyright © 2025 Texas Instruments Incorporated

5.7 Typical Characteristics (continued)

at V_S = 2.7V, single supply, and T_A = 25°C (unless otherwise noted)

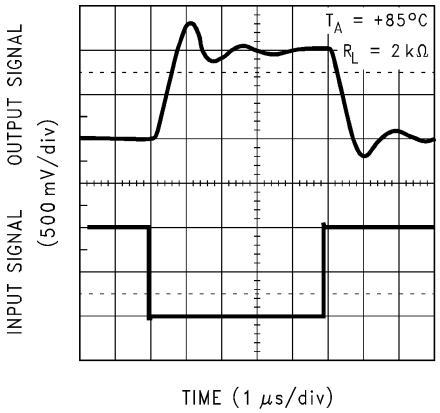

図 5-31. Inverting Large Signal Response

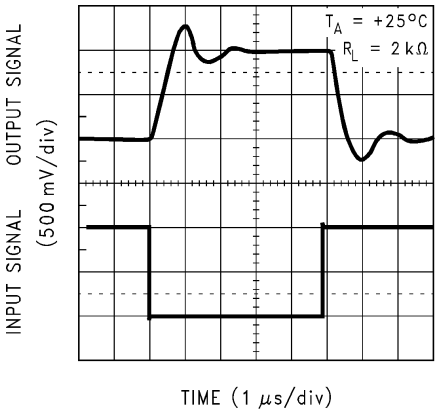

図 5-32. Inverting Large Signal Response

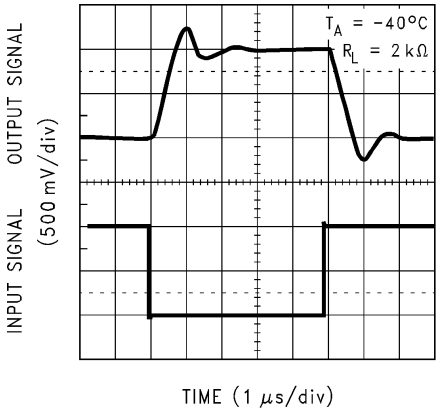

図 5-33. Inverting Large Signal Response

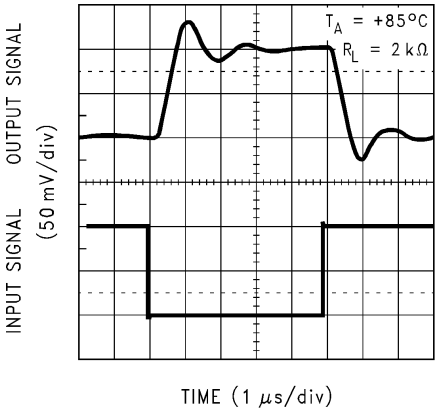

図 5-34. Inverting Small Signal Response

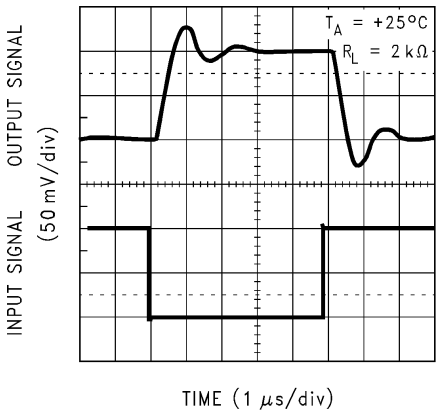

図 5-35. Inverting Small Signal Response

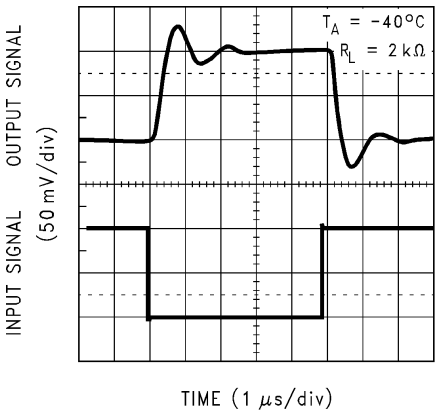

図 5-36. Inverting Small Signal Response

Copyright © 2025 Texas Instruments Incorporated

5.7 Typical Characteristics (continued)

at V_S = 2.7V, single supply, and T_A = 25°C (unless otherwise noted)

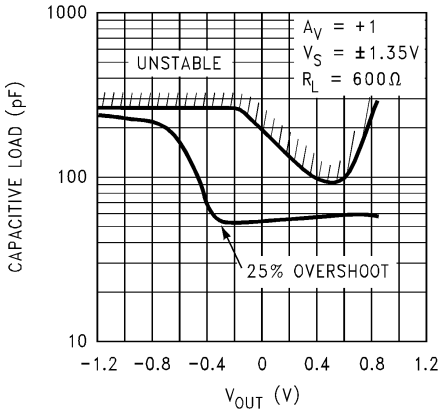

図 5-37. Stability vs Capacitive Load

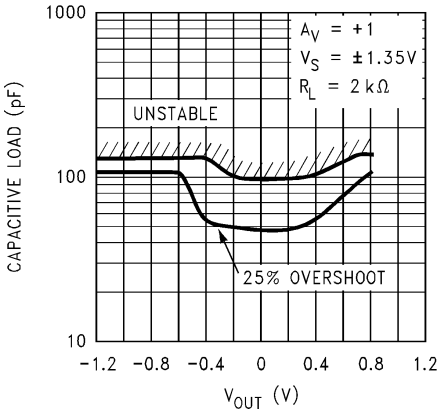

図 5-38. Stability vs Capacitive Load

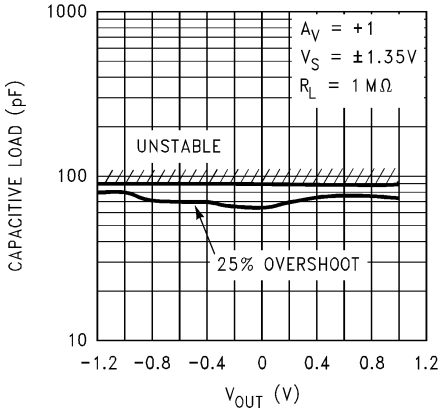

図 5-39. Stability vs Capacitive Load

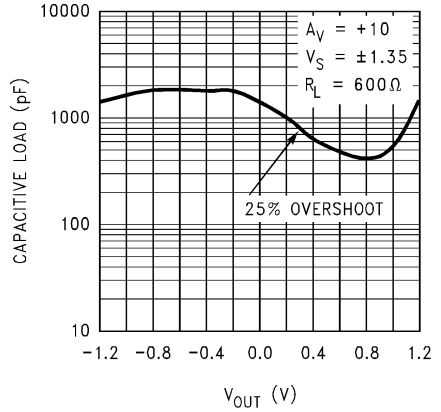

図 5-40. Stability vs Capacitive Load

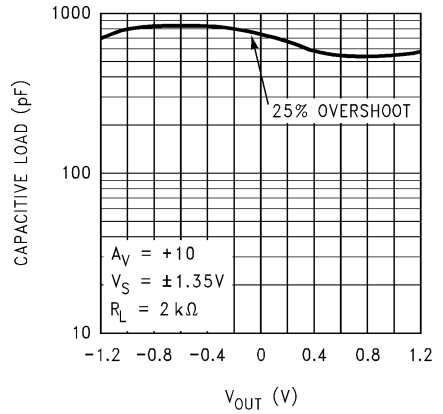

図 5-41. Stability vs Capacitive Load

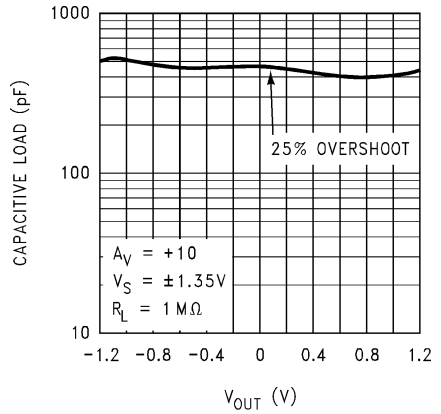

図 5-42. Stability vs Capacitive Load

Copyright © 2025 Texas Instruments Incorporated

6 Detailed Description

6.1 Overview

The LMC603x operational amplifiers are designed to provide very low leakage current. The femtoampere leakage current level makes these op amps an excellent choice for buffering very high impedance sources. The LMC603x is capable of operating over a wide supply voltage range and as low as 2V. The low supply operation and tiny, die-size ball-grid-array (DSBGA) package make the LMC603x an excellent choice for portable, battery-operated systems.

6.2 Functional Block Diagram

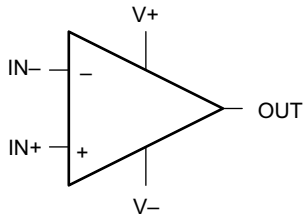

Copyright © 2025 Texas Instruments Incorporated

7 Application and Implementation

注

以下のアプリケーション情報は、TI の製品仕様に含まれるものではなく、TI ではその正確性または完全性を保証いたしません。個々の目的に対する製品の適合性については、お客様の責任で判断していただくことになります。お客様は自身の設計実装を検証しテストすることで、システムの機能を確認する必要があります。

7.1 Application Information

7.1.1 Capacitive Load Tolerance

Like many other op amps, the LMC603x can oscillate when the applied load appears capacitive. The threshold of oscillation varies both with load and circuit gain. The configuration most sensitive to oscillation is a unity-gain follower. See also セクション 5.7.

The load capacitance interacts with the op amp output resistance to create an additional pole. If this pole frequency is sufficiently low, the pole degrades the op amp phase margin so that the amplifier is no longer stable at low gains. 図 7-1 shows that the addition of a small resistor (50Ω to 100Ω) in series with the op amp output, and a capacitor (5pF to 10pF) from inverting input to output pins, returns the phase margin to a safe value without interfering with lower-frequency circuit operation. Thus, larger values of capacitance can be tolerated without oscillation. In all cases, the output rings heavily when the load capacitance is near the threshold for oscillation.

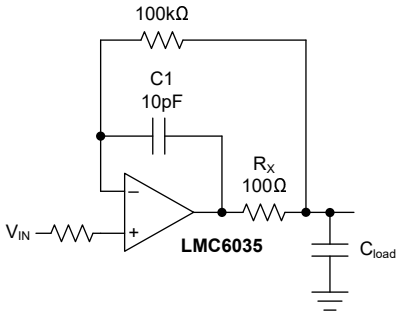

図 7-1. Rx, Cx Improve Capacitive Load Tolerance

Capacitive load driving capability is enhanced by using a pullup resistor to V+ (shown in 図 7-2). Typically a pullup resistor conducting 500µA or greater significantly improves capacitive-load responses. The value of the pullup resistor is determined based on the current sinking capability of the amplifier with respect to the desired output swing. The open-loop gain of the amplifier can also be affected by the pullup resistor (see セクション 5.6).

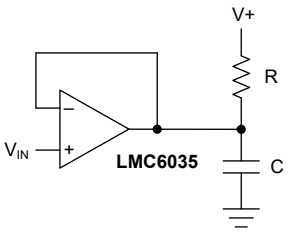

図 7-2. Compensating for Large Capacitive Loads With a Pullup Resistor

Copyright © 2025 Texas Instruments Incorporated

7.2 Typical Applications

7.2.1 Differential Driver

The LMC603x are an excellent choice for low-voltage applications. A desirable feature that the LMC603x bring to low-voltage applications is the output drive capability—a hallmark for TI's CMOS amplifiers. The circuit of 図 7-3 illustrates the drive capability of the LMC603x at 3V of supply. These devices are used as a differential output driver for a one-to-one audio transformer, like those used for isolating ground from the telephone lines. The transformer (T1) loads the op amps with about 600Ω of ac load, at 1kHz. Capacitor C1 functions to block dc from the low winding resistance of T1. Although the value of C1 is relatively high, the capacitive load reactance (X_C) is negligible compared to inductive reactance (X_l) of T1.

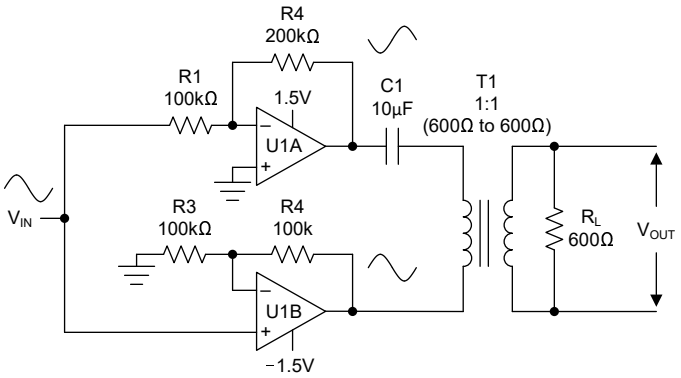

図 7-3. Differential Driver

The circuit in 図 7-3 consists of one input signal and two output signals. U1A amplifies the input with an inverting gain of −2, while the U1B amplifies the input with a non-inverting gain of +2. The two outputs are 180° out of phase with each other; therefore, the gain across the differential output is 4. As the differential output swings between the supply rails, one of the op amps sources the current to the load, while the other op amp sinks the current.

How good a CMOS op amp can sink or source a current is an important factor in determining output swing capability. The output stage of the LMC603x—like many op amps—sources and sinks output current through two complementary transistors in series. This *totem pole* arrangement translates to a channel resistance (R_{dson}) at each supply rail that acts to limit the output swing. Most CMOS op amps are able to swing the outputs very close to the rails; except, however, under the difficult conditions of low supply voltage and heavy load. The LMC603x exhibit exceptional output swing capability under these conditions.

The scope photos of 図 7-4 and 図 7-5 represent measurements taken directly at the output (relative to GND) of U1A, in 図 7-3. 図 7-4 illustrates the output swing capability of the LMC6035, while 図 7-5 provides a benchmark comparison. (The benchmark op amp is another low-voltage (3V) op amp manufactured by one of our reputable competitors.)

Copyright © 2025 Texas Instruments Incorporated

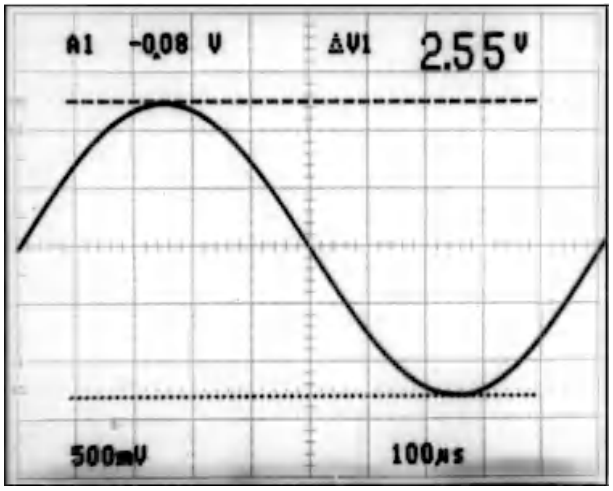

図 7-4. Output Swing Performance of the LMC6035 per the Circuit of 図 7-3

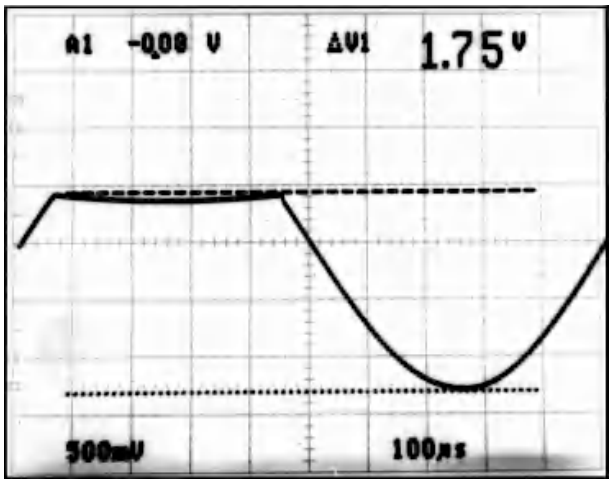

図 7-5. Output Swing Performance of Benchmark Op Amp per the Circuit of 図 7-3

Notice the excellent drive capability of LMC6035 when compared with the benchmark measurement—even though the benchmark op amp uses twice the supply current.

Not only does the LMC603x provide excellent output swing capability at low supply voltages, but these devices also maintain high open-loop gain (A_{OL}) with heavy loads. To illustrate this, the LMC6035 and the benchmark op amp were compared for distortion performance in the circuit of 図 7-3. 図 7-6 shows this comparison. The y-axis represents percent total harmonic distortion (THD + noise) across the loaded secondary of T1. The x-axis represents the input amplitude of a 1kHz sine wave. (Notice that T1 loses about 20% of the voltage to the voltage divider of R_L (600Ω) and T1 winding resistances—a performance deficiency of the transformer.)

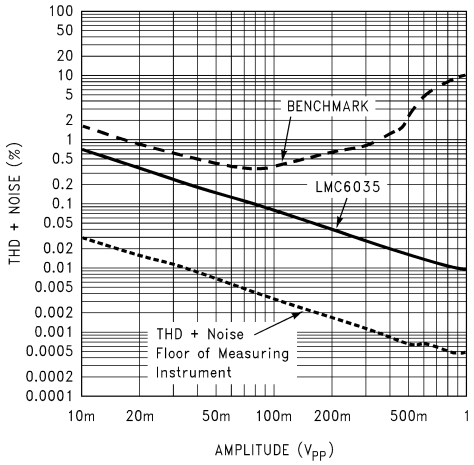

図 7-6. THD+Noise Performance of LMC6035 and *Benchmark* per Circuit of 図 7-3

図 7-6 shows the excellent distortion performance of the LMC603x over that of the benchmark op amp. The heavy loading of the circuit causes the A_{OL} of the benchmark part to drop significantly, which causes increased distortion.

Copyright © 2025 Texas Instruments Incorporated

7.2.2 Low-Pass Active Filter

A common application for low voltage systems is active filters, in cordless and cellular phones for example. The ultra low input bias currents (I_B) of the LMC603x makes these op amps an excellent for low power active filter applications, because the low input bias current allows the use of higher resistor values and lower capacitor values. This reduces power consumption and space.

図 7-7 shows a low pass, active filter with a Butterworth (maximally flat) frequency response. The topology is a Sallen and Key filter with unity gain. Note the normalized component values in parenthesis which are obtainable from standard filter design handbooks. These values provide a 1Hz cutoff frequency, but can be easily scaled for a desired cutoff frequency (f_c). The bold component values of 図 7-7 provide a cutoff frequency of 3kHz. An example of the scaling procedure follows 図 7-7.

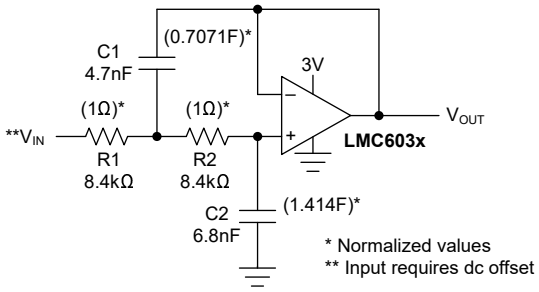

図 7-7. 2-Pole, 3kHz, Active, Sallen and Key, Low-Pass Filter With Butterworth Response

7.2.2.1 Low-Pass Frequency Scaling Procedure

The actual component values represented in bold of 図 7-7 were obtained with the following scaling procedure:

1. First determine the frequency scaling factor (FSF) for the desired cutoff frequency. Choosing f_c at 3kHz, provides the following FSF computation:

$$\mathrm{FSF} = 2\pi \times 300\mathrm{kHz} = 18.84\mathrm{k} \tag{1}$$

2. Then divide all of the normalized capacitor values by the FSF as follows (C1' and C2': prior to impedance scaling):

$$\mathrm{C1}' = \frac{\mathrm{C1_{normalized}}}{\mathrm{FSF}} = \frac{0.707}{18.84\mathrm{k}} = 37.93 \times 10^{-6}\mathrm{F} \tag{2}$$

$$\mathrm{C2}' = \frac{\mathrm{C1_{normalized}}}{\mathrm{FSF}} = \frac{1.414}{18.84\mathrm{k}} = 75.05 \times 10^{-6}\mathrm{F} \tag{3}$$

3. Last, choose an impedance scaling factor (Z). This Z factor can be calculated from a standard value for C2. Then Z can be used to determine the remaining component values as follows:

$$\mathrm{Z} = \frac{\mathrm{C2}'}{\mathrm{C2_{chosen}}} = \frac{75.05 \times 10^{-6}\mathrm{F}}{6.8\mathrm{nF}} = 8.4\mathrm{k} \tag{4}$$

$$\mathrm{C1} = \frac{\mathrm{C1}'}{\mathrm{Z}} = \frac{37.93 \times 10^{-6}\mathrm{F}}{8.4\mathrm{k}} = 4.52\mathrm{nF} \tag{5}$$

$$\mathrm{R1} = \mathrm{R1_{normalized}} \times \mathrm{Z} = 1\Omega \times 8.4\mathrm{k} = 8.4\mathrm{k}\Omega \tag{6}$$

$$\mathrm{R2} = \mathrm{R2_{normalized}} \times \mathrm{Z} = 1\Omega \times 8.4\mathrm{k} = 8.4\mathrm{k}\Omega \tag{7}$$

4. A standard value of 8.45kΩ is chosen for R1 and R2.

Copyright © 2025 Texas Instruments Incorporated

7.2.3 High-Pass Active Filter

The previous low-pass filter circuit of 図 7-7 converts to a high-pass active filter per 図 7-8.

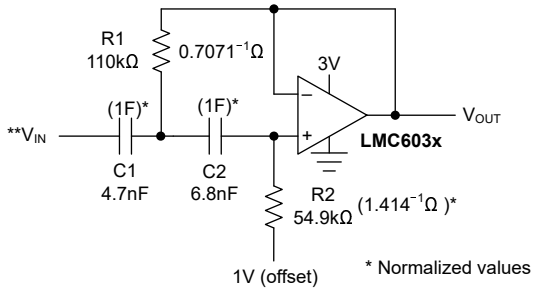

図 7-8. 2-Pole, 300Hz, Sallen and Key, High-Pass Filter

7.2.3.1 High-Pass Frequency Scaling Procedure

Choose a standard capacitor value and scale the impedances in the circuit according to the desired cutoff frequency (300Hz) as follows:

$$C = C1 = C2 \tag{8}$$

$$Z = \frac{1}{2\pi f_C C} = \frac{1}{2\pi \times 300\text{Hz} \times 6.8\text{nF}} = 78.05\text{k}\Omega \tag{9}$$

$$R1 = Z \times R1_{\text{normalized}} = 78.05\text{k}\Omega \times \frac{1}{0.707} = 110.4\text{k}\Omega \tag{10}$$

A standard value of 110kΩ is chosen for R1.

$$R2 = Z \times R2_{\text{normalized}} = 78.05\text{k}\Omega \times \frac{1}{1.414} = 55.2\text{k}\Omega \tag{11}$$

A standard value of 54.9kΩ is chosen for R2.

Copyright © 2025 Texas Instruments Incorporated

7.2.4 Dual-Amplifier Bandpass Filter

The dual-amplifier bandpass (DABP) filter features the ability to independently adjust f_c and Q. In most other bandpass topologies, the f_c and Q adjustments interact with each other. The DABP filter also offers both low sensitivity to component values and a high Q. The following application of 図 7-9, provides a 1kHz center frequency and a Q of 100.

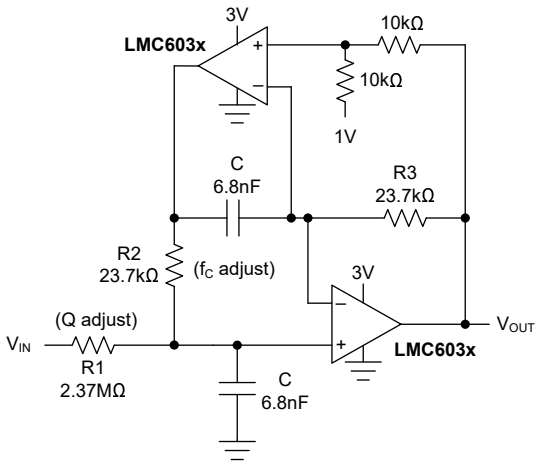

図 7-9. Active 2-Pole Bandpass Filter (1kHz)

7.2.4.1 DABP Component Selection Procedure

Component selection for the DABP filter is performed as follows:

1. First choose a center frequency (f_c). 図 7-9 represents component values that were obtained from the following computation for a center frequency of 1kHz.

$$R2 = R3 = \frac{1}{2\pi f_c C} \tag{12}$$

Given that f_c = 1kHz and C $_{(chosen)}$ = **6.8nF**:

$$R2 = R3 = \frac{1}{2\pi \times 1\text{kHz} \times 6.8\text{nF}} = 23.4\text{k}\Omega \tag{13}$$

A standard value resistor, 23.7kΩ is chosen.

2. Then compute R1 for a desired Q (f_c / BW) as follows:

$$R1 = Q \times R2 \tag{14}$$

Choosing a Q of 100, the resistor R1 can be computed as follows: $R1 = 100 \times 23.7\text{k}\Omega = 2.37\text{M}\Omega$ (15)

Copyright © 2025 Texas Instruments Incorporated

7.3 Layout

7.3.1 Layout Guidelines

7.3.1.1 Printed Circuit Board (PCB) Layout for High-Impedance Work

Any circuit that must operate with < 1000pA of leakage current requires special layout of the PCB. To take advantage of the ultra-low bias current of the LMC603x (typically < 0.04pA), an excellent layout is essential. Fortunately, the techniques for obtaining low leakages are quite simple. First, do not ignore the surface leakage of the PCB, even though at times the surface leakage can appear acceptably low. Under conditions of high humidity, dust, or contamination, the surface leakage can be appreciable.

To minimize the effect of any surface leakage, lay out a ring of foil completely surrounding the LMC603x inputs and the terminals of capacitors, diodes, conductors, resistors, relay terminals, and so on, connected to the op-amp inputs. See also 図 7-14. To have a significant effect, place guard rings on both the top and bottom of the PCB. This PCB foil must then be connected to a voltage that is at the same voltage as the amplifier inputs (because no leakage current can flow between two points at the same potential). For example, a PCB trace-to-pad resistance of $10^{12}\Omega$, which is normally considered a very large resistance, can leak 5pA if the trace is a 5V bus adjacent to the pad of an input. This configuration can cause a 100 times degradation from the actual performance of the amplifier. However, if a guard ring is held within 5mV of the inputs, then even a resistance of $10^{11}\Omega$ causes only 0.05pA of leakage current, or perhaps a minor (2:1) degradation of the amplifier performance. See 図 7-10 through 図 7-12 for typical connections of guard rings for standard op-amp configurations. If both inputs are active and at high impedance, the guard can be tied to ground and still provide some protection; see also 図 7-13.

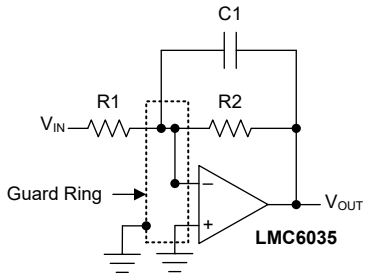

図 7-10. Guard Ring Connections: Inverting Amplifier

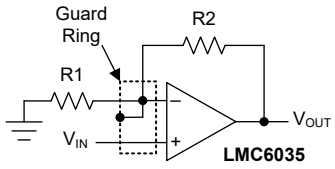

図 7-11. Guard Ring Connections: Noninverting Amplifier

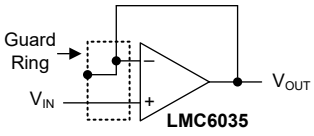

図 7-12. Guard Ring Connections: Follower

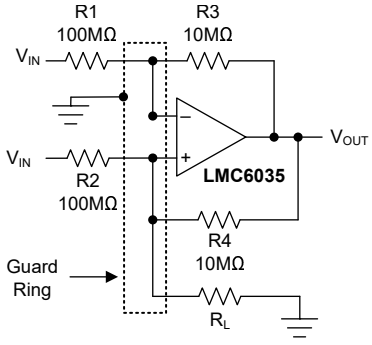

図 7-13. Howland Current Pump

A more comprehensive discussion on high impedance circuit design and considerations, see also *Measurement and Calibration Techniques for Ultra-low Current Measurement Systems* application note.

Copyright © 2025 Texas Instruments Incorporated

7.3.1.2 DSBGA Considerations

Unlike other small packages, the DSBGA package does not follow the trend of smaller packages having greater thermal resistance. The LMC6035 in DSBGA has a thermal resistance of 103.1°C/W compared to 149.2°C/W in VSSOP. Even when driving a 600Ω load and operating from ±7.5V supplies, the maximum temperature rise is less than 2°C. For application information specific to the DSBGA package, see the *AN-1112 DSBGA Wafer Level Chip Scale Package* application report.

7.3.2 Layout Example

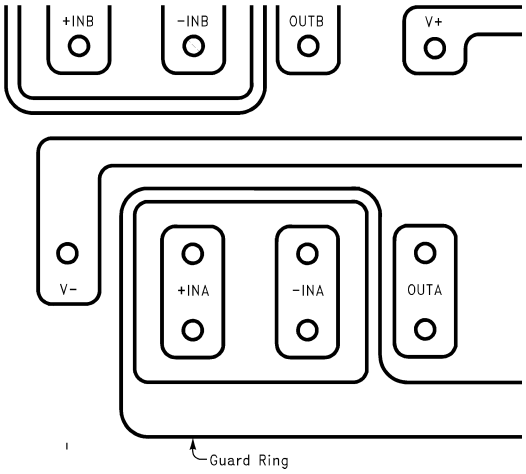

図 7-14. Layout Example: Using the LMC603x Guard Ring in PCB Layout

Copyright © 2025 Texas Instruments Incorporated

8 Device and Documentation Support

TI offers an extensive line of development tools. Tools and software to evaluate the performance of the device, generate code, and develop solutions are listed below.

8.1 ドキュメントの更新通知を受け取る方法

ドキュメントの更新についての通知を受け取るには、www.tij.co.jp のデバイス製品フォルダを開いてください。[通知] をクリックして登録すると、変更されたすべての製品情報に関するダイジェストを毎週受け取ることができます。 変更の詳細については、改訂されたドキュメントに含まれている改訂履歴をご覧ください。

8.2 サポート・リソース

テキサス・インスツルメンツ E2E™ サポート・フォーラムは、エンジニアが検証済みの回答と設計に関するヒントをエキスパートから迅速かつ直接得ることができる場所です。既存の回答を検索したり、独自の質問をしたりすることで、設計で必要な支援を迅速に得ることができます。

リンクされているコンテンツは、各寄稿者により「現状のまま」提供されるものです。これらはテキサス・インスツルメンツの仕様を構成するものではなく、必ずしもテキサス・インスツルメンツの見解を反映したものではありません。テキサス・インスツルメンツの使用条件を参照してください。

Trademarks

テキサス・インスツルメンツ E2E™ is a trademark of Texas Instruments.
すべての商標は、それぞれの所有者に帰属します。

8.3 静電気放電に関する注意事項



この IC は、ESD によって破損する可能性があります。テキサス・インスツルメンツは、IC を取り扱う際には常に適切な注意を払うことを推奨します。正しい取り扱いおよび設置手順に従わない場合、デバイスを破損するおそれがあります。

ESD による破損は、わずかな性能低下からデバイスの完全な故障まで多岐にわたります。精密な IC の場合、パラメータがわずかに変化するだけで公表されている仕様から外れる可能性があるため、破損が発生しやすくなっています。

8.4 用語集

テキサス・インスツルメンツ用語集　この用語集には、用語や略語の一覧および定義が記載されています。

9 Revision History

資料番号末尾の英字は改訂を表しています。その改訂履歴は英語版に準じています。

Changes from Revision G (April 2013) to Revision H (December 2024)	Page
• ドキュメント全体にわたって表、図、相互参照の採番方法を更新	1
• LMC6035-Q1 を新しいドキュメントに移動	1
• 明確化のために説明文を更新	1
• 表紙の画像を更新	1
• RES11 を使った差動アンプのアプリケーション画像を追加	1
• Added *Pin Configuration and Functions*	3
• Updated figures and tables in *Pin Configuration and Functions*	3
• Added input pin voltage to *Absolute Maximum Ratings*	5
• Added *ESD Ratings*	5
• Deleted machine model in *ESD Ratings*	5
• Added Thermal Information	6
• Updated junction-to-ambient thermal resistance values	6
• Updated parameter names and symbols	7
• Added input voltage noise density specification for V+ = 15V	7
• Changed input current noise density TYP from 0.2fA/√Hz to 6fA/√Hz	7
• Deleted footnotes 1 and 2 from DC *Electrical Characteristics*	7

Copyright © 2025 Texas Instruments Incorporated

- Moved footnotes 4 into open-loop gain test conditions..... 7
- Deleted footnote 1 from AC *Electrical Characteristics* 7
- Updated footnote 2 and moved conditions to slew rate test conditions.....7
- Moved footnote 3 from AC *Electrical Characteristics* conditions crosstalk test conditions.....7
- Added Figures 5-3, 5-4, 5-17.....9
- Deleted Figures 16 and 17.....9
- Added *Overview* 16
- Added *Functional Block Diagram* 16
- Changed A_{VOL} to A_{OL} 18
- Updated Figure 7-7.....20
- Updated Figure 7-8.....21
- Updated Figure 7-9.....22
- Changed the value of f_c from 3kHz to 1kHz to fix error in equation..... 22
- Added reference to *Measurement and Calibration Techniques for Ultra-low Current Measurement Systems* application note in Printed Circuit Board (PCB) Layout for High-Impedance Work.....23
- Updated thermal resistance information in *DSBGA Considerations* 24

10 Mechanical, Packaging, and Orderable Information

The following pages include mechanical, packaging, and orderable information. This information is the most current data available for the designated devices. This data is subject to change without notice and revision of this document. For browser-based versions of this data sheet, refer to the left-hand navigation.

Copyright © 2025 Texas Instruments Incorporated

PACKAGING INFORMATION

Orderable part number	Status (1)	Material type (2)	Package | Pins	Package qty | Carrier	RoHS (3)	Lead finish/ Ball material (4)	MSL rating/ Peak reflow (5)	Op temp (°C)	Part marking (6)
LMC6035IM/NOPB	Obsolete	Production	SOIC (D) | 8	-	-	Call TI	Call TI	-40 to 85	LMC60 35IM
LMC6035IMM/NOPB	Active	Production	VSSOP (DGK) | 8	1000 | SMALL T&R	Yes	NIPDAU | SN	Level-1-260C-UNLIM	-40 to 85	A06B
LMC6035IMM/NOPB.A	Active	Production	VSSOP (DGK) | 8	1000 | SMALL T&R	Yes	NIPDAU	Level-1-260C-UNLIM	-40 to 85	A06B
LMC6035IMM/NOPB.B	Active	Production	VSSOP (DGK) | 8	1000 | SMALL T&R	Yes	NIPDAU	Level-1-260C-UNLIM	-40 to 85	A06B
LMC6035IMMX/NOPB	Active	Production	VSSOP (DGK) | 8	3500 | LARGE T&R	Yes	NIPDAU | SN	Level-1-260C-UNLIM	-40 to 85	A06B
LMC6035IMMX/NOPB.A	Active	Production	VSSOP (DGK) | 8	3500 | LARGE T&R	Yes	NIPDAU	Level-1-260C-UNLIM	-40 to 85	A06B
LMC6035IMMX/NOPB.B	Active	Production	VSSOP (DGK) | 8	3500 | LARGE T&R	Yes	NIPDAU	Level-1-260C-UNLIM	-40 to 85	A06B
LMC6035IMX/NOPB	Active	Production	SOIC (D) | 8	2500 | LARGE T&R	Yes	NIPDAU | SN	Level-1-260C-UNLIM	-40 to 85	LMC60 35IM
LMC6035IMX/NOPB.A	Active	Production	SOIC (D) | 8	2500 | LARGE T&R	Yes	NIPDAU	Level-1-260C-UNLIM	-40 to 85	LMC60 35IM
LMC6035IMX/NOPB.B	Active	Production	SOIC (D) | 8	2500 | LARGE T&R	Yes	NIPDAU	Level-1-260C-UNLIM	-40 to 85	LMC60 35IM
LMC6035ITL/NOPB	Active	Production	DSBGA (YZR) | 8	250 | SMALL T&R	Yes	SNAGCU	Level-1-260C-UNLIM	-40 to 85	A 80
LMC6035ITL/NOPB.A	Active	Production	DSBGA (YZR) | 8	250 | SMALL T&R	Yes	SNAGCU	Level-1-260C-UNLIM	-40 to 85	A 80
LMC6035ITL/NOPB.B	Active	Production	DSBGA (YZR) | 8	250 | SMALL T&R	Yes	SNAGCU	Level-1-260C-UNLIM	-40 to 85	A 80
LMC6035ITLX/NOPB	Active	Production	DSBGA (YZR) | 8	3000 | LARGE T&R	Yes	SNAGCU	Level-1-260C-UNLIM	-40 to 85	A 80
LMC6035ITLX/NOPB.A	Active	Production	DSBGA (YZR) | 8	3000 | LARGE T&R	Yes	SNAGCU	Level-1-260C-UNLIM	-40 to 85	A 80
LMC6035ITLX/NOPB.B	Active	Production	DSBGA (YZR) | 8	3000 | LARGE T&R	Yes	SNAGCU	Level-1-260C-UNLIM	-40 to 85	A 80
LMC6035YAFR	Active	Production	DSBGA (YAF) | 8	3000 | LARGE T&R	Yes	SNAGCU	Level-1-260C-UNLIM	-40 to 85	3I6H
LMC6035YAFR.A	Active	Production	DSBGA (YAF) | 8	3000 | LARGE T&R	Yes	SNAGCU	Level-1-260C-UNLIM	-40 to 85	3I6H
LMC6036IMT/NOPB	Obsolete	Production	TSSOP (PW) | 14	-	-	Call TI	Call TI	-40 to 85	LMC603 6IMT
LMC6036IMTX/NOPB	Active	Production	TSSOP (PW) | 14	2500 | LARGE T&R	Yes	NIPDAU	Level-1-260C-UNLIM	-40 to 85	(6036I, LMC603) 6IMT

Orderable part number	Status (1)	Material type (2)	Package | Pins	Package qty | Carrier	RoHS (3)	Lead finish/ Ball material (4)	MSL rating/ Peak reflow (5)	Op temp (°C)	Part marking (6)
LMC6036IMTX/NOPB.A	Active	Production	TSSOP (PW) | 14	2500 | LARGE T&R	Yes	NIPDAU	Level-1-260C-UNLIM	-40 to 85	(6036I, LMC603) 6IMT
LMC6036IMTX/NOPB.B	Active	Production	TSSOP (PW) | 14	2500 | LARGE T&R	Yes	NIPDAU	Level-1-260C-UNLIM	-40 to 85	(6036I, LMC603) 6IMT
LMC6036IMX/NOPB	Active	Production	SOIC (D) | 14	2500 | LARGE T&R	Yes	NIPDAU	Level-1-260C-UNLIM	-40 to 85	LMC6036IM
LMC6036IMX/NOPB.A	Active	Production	SOIC (D) | 14	2500 | LARGE T&R	Yes	NIPDAU	Level-1-260C-UNLIM	-40 to 85	LMC6036IM
LMC6036IMX/NOPB.B	Active	Production	SOIC (D) | 14	2500 | LARGE T&R	Yes	NIPDAU	Level-1-260C-UNLIM	-40 to 85	LMC6036IM

(1) **Status:** For more details on status, see our product life cycle.

(2) **Material type:** When designated, preproduction parts are prototypes/experimental devices, and are not yet approved or released for full production. Testing and final process, including without limitation quality assurance, reliability performance testing, and/or process qualification, may not yet be complete, and this item is subject to further changes or possible discontinuation. If available for ordering, purchases will be subject to an additional waiver at checkout, and are intended for early internal evaluation purposes only. These items are sold without warranties of any kind.

(3) **RoHS values:** Yes, No, RoHS Exempt. See the TI RoHS Statement for additional information and value definition.

(4) **Lead finish/Ball material:** Parts may have multiple material finish options. Finish options are separated by a vertical ruled line. Lead finish/Ball material values may wrap to two lines if the finish value exceeds the maximum column width.

(5) **MSL rating/Peak reflow:** The moisture sensitivity level ratings and peak solder (reflow) temperatures. In the event that a part has multiple moisture sensitivity ratings, only the lowest level per JEDEC standards is shown. Refer to the shipping label for the actual reflow temperature that will be used to mount the part to the printed circuit board.

(6) **Part marking:** There may be an additional marking, which relates to the logo, the lot trace code information, or the environmental category of the part.

Multiple part markings will be inside parentheses. Only one part marking contained in parentheses and separated by a "~" will appear on a part. If a line is indented then it is a continuation of the previous line and the two combined represent the entire part marking for that device.

Important Information and Disclaimer: The information provided on this page represents TI's knowledge and belief as of the date that it is provided. TI bases its knowledge and belief on information provided by third parties, and makes no representation or warranty as to the accuracy of such information. Efforts are underway to better integrate information from third parties. TI has taken and continues to take reasonable steps to provide representative and accurate information but may not have conducted destructive testing or chemical analysis on incoming materials and chemicals. TI and TI suppliers consider certain information to be proprietary, and thus CAS numbers and other limited information may not be available for release.

In no event shall TI's liability arising out of such information exceed the total purchase price of the TI part(s) at issue in this document sold by TI to Customer on an annual basis.

OTHER QUALIFIED VERSIONS OF LMC6035 :

- Automotive : LMC6035-Q1

NOTE: Qualified Version Definitions:

- Automotive - Q100 devices qualified for high-reliability automotive applications targeting zero defects

TAPE AND REEL INFORMATION

REEL DIMENSIONS

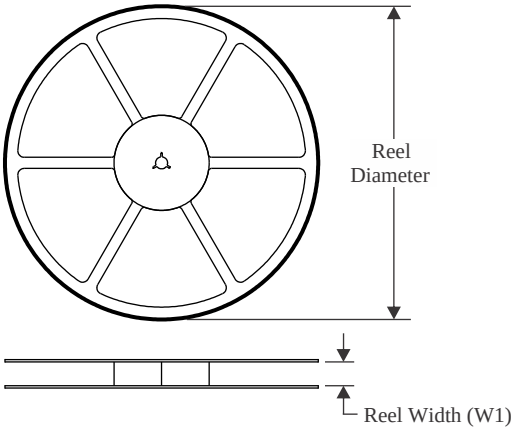

TAPE DIMENSIONS

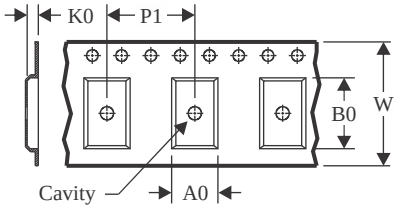

A0	Dimension designed to accommodate the component width
B0	Dimension designed to accommodate the component length
K0	Dimension designed to accommodate the component thickness
W	Overall width of the carrier tape
P1	Pitch between successive cavity centers

QUADRANT ASSIGNMENTS FOR PIN 1 ORIENTATION IN TAPE

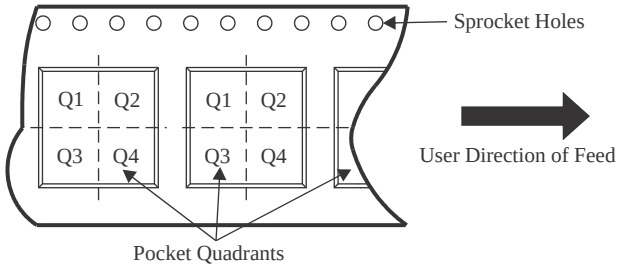

*All dimensions are nominal

Device	Package Type	Package Drawing	Pins	SPQ	Reel Diameter (mm)	Reel Width W1 (mm)	A0 (mm)	B0 (mm)	K0 (mm)	P1 (mm)	W (mm)	Pin1 Quadrant
LMC6035IMM/NOPB	VSSOP	DGK	8	1000	177.8	12.4	5.3	3.4	1.4	8.0	12.0	Q1
LMC6035IMM/NOPB	VSSOP	DGK	8	1000	330.0	12.4	5.3	3.4	1.4	8.0	12.0	Q1
LMC6035IMMX/NOPB	VSSOP	DGK	8	3500	330.0	12.4	5.3	3.4	1.4	8.0	12.0	Q1
LMC6035IMMX/NOPB	VSSOP	DGK	8	3500	330.0	12.4	5.3	3.4	1.4	8.0	12.0	Q1
LMC6035IMX/NOPB	SOIC	D	8	2500	330.0	12.4	6.4	5.2	2.1	8.0	12.0	Q1
LMC6035IMX/NOPB	SOIC	D	8	2500	330.0	12.4	6.4	5.2	2.1	8.0	12.0	Q1
LMC6035ITL/NOPB	DSBGA	YZR	8	250	178.0	8.4	1.85	2.01	0.76	4.0	8.0	Q1
LMC6035ITLX/NOPB	DSBGA	YZR	8	3000	178.0	8.4	1.85	2.01	0.76	4.0	8.0	Q1
LMC6035YAFR	DSBGA	YAF	8	3000	180.0	8.4	1.89	2.05	0.7	4.0	8.0	Q2
LMC6036IMTX/NOPB	TSSOP	PW	14	2500	330.0	12.4	6.9	5.6	1.6	8.0	12.0	Q1
LMC6036IMX/NOPB	SOIC	D	14	2500	330.0	16.4	6.5	9.0	2.1	8.0	16.0	Q1

TAPE AND REEL BOX DIMENSIONS

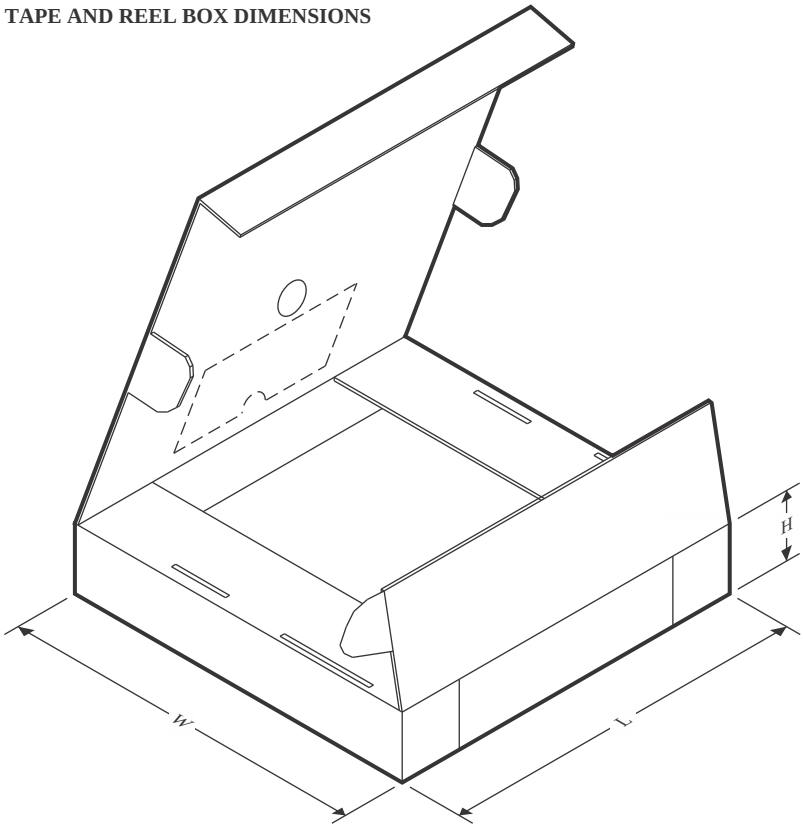

*All dimensions are nominal

Device	Package Type	Package Drawing	Pins	SPQ	Length (mm)	Width (mm)	Height (mm)
LMC6035IMM/NOPB	VSSOP	DGK	8	1000	208.0	191.0	35.0
LMC6035IMM/NOPB	VSSOP	DGK	8	1000	353.0	353.0	32.0
LMC6035IMMX/NOPB	VSSOP	DGK	8	3500	367.0	367.0	35.0
LMC6035IMMX/NOPB	VSSOP	DGK	8	3500	353.0	353.0	32.0
LMC6035IMX/NOPB	SOIC	D	8	2500	367.0	367.0	35.0
LMC6035IMX/NOPB	SOIC	D	8	2500	353.0	353.0	32.0
LMC6035ITL/NOPB	DSBGA	YZR	8	250	208.0	191.0	35.0
LMC6035ITLX/NOPB	DSBGA	YZR	8	3000	208.0	191.0	35.0
LMC6035YAFR	DSBGA	YAF	8	3000	182.0	182.0	20.0
LMC6036IMTX/NOPB	TSSOP	PW	14	2500	353.0	353.0	32.0
LMC6036IMX/NOPB	SOIC	D	14	2500	353.0	353.0	32.0

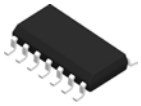

PACKAGE OUTLINE

D0014A

SOIC - 1.75 mm max height

SMALL OUTLINE INTEGRATED CIRCUIT

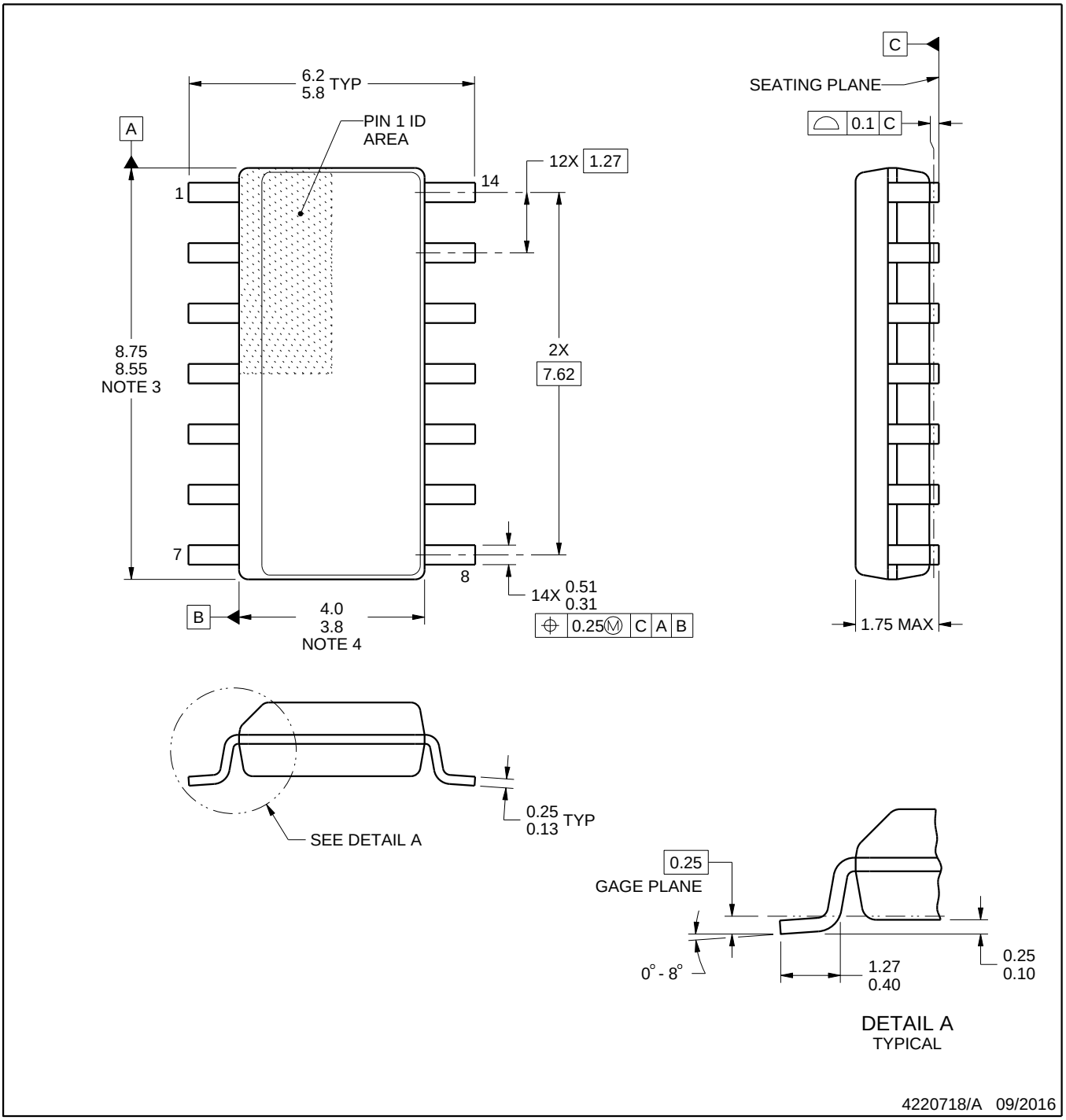

NOTES:

1. All linear dimensions are in millimeters. Dimensions in parenthesis are for reference only. Dimensioning and tolerancing per ASME Y14.5M.
2. This drawing is subject to change without notice.
3. This dimension does not include mold flash, protrusions, or gate burrs. Mold flash, protrusions, or gate burrs shall not exceed 0.15 mm, per side.
4. This dimension does not include interlead flash. Interlead flash shall not exceed 0.43 mm, per side.
5. Reference JEDEC registration MS-012, variation AB.

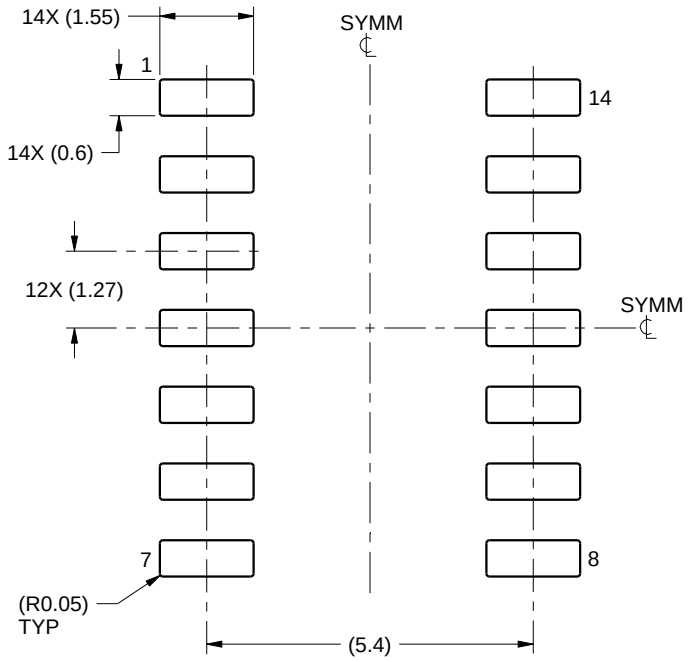

LAND PATTERN EXAMPLE
SCALE:8X

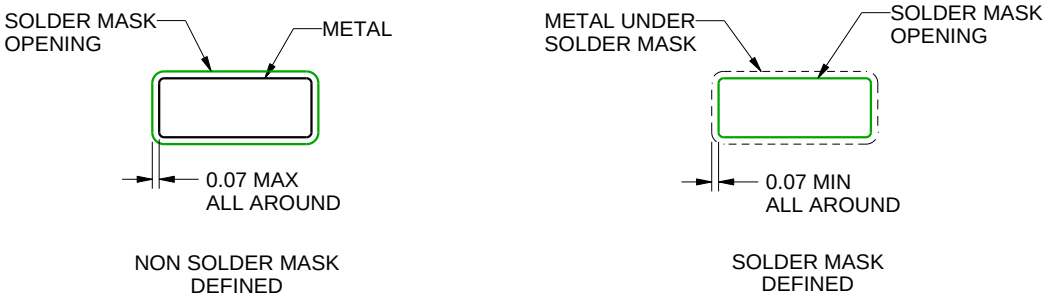

SOLDER MASK DETAILS

4220718/A 09/2016

NOTES: (continued)

6. Publication IPC-7351 may have alternate designs.
7. Solder mask tolerances between and around signal pads can vary based on board fabrication site.

EXAMPLE STENCIL DESIGN

D0014A

SOIC - 1.75 mm max height

SMALL OUTLINE INTEGRATED CIRCUIT

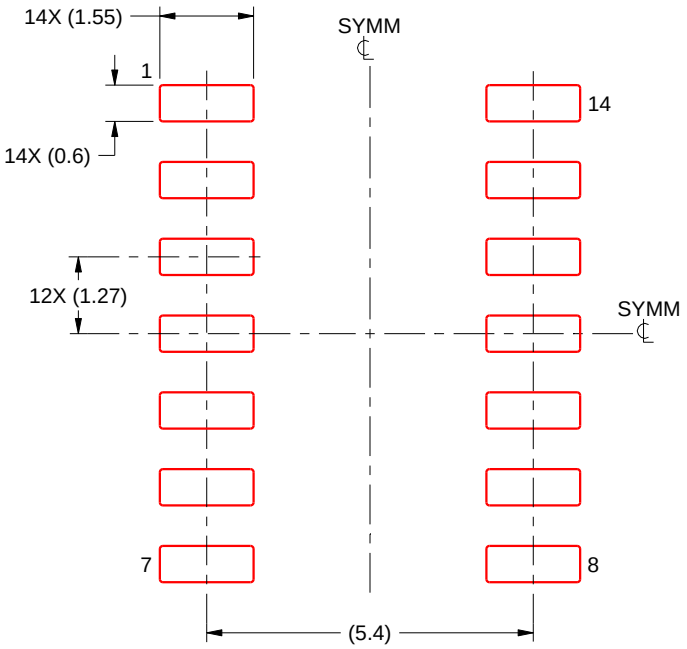

SOLDER PASTE EXAMPLE
BASED ON 0.125 mm THICK STENCIL
SCALE:8X

4220718/A 09/2016

NOTES: (continued)

8. Laser cutting apertures with trapezoidal walls and rounded corners may offer better paste release. IPC-7525 may have alternate design recommendations.
9. Board assembly site may have different recommendations for stencil design.

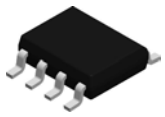

PACKAGE OUTLINE

D0008A

SOIC - 1.75 mm max height

SMALL OUTLINE INTEGRATED CIRCUIT

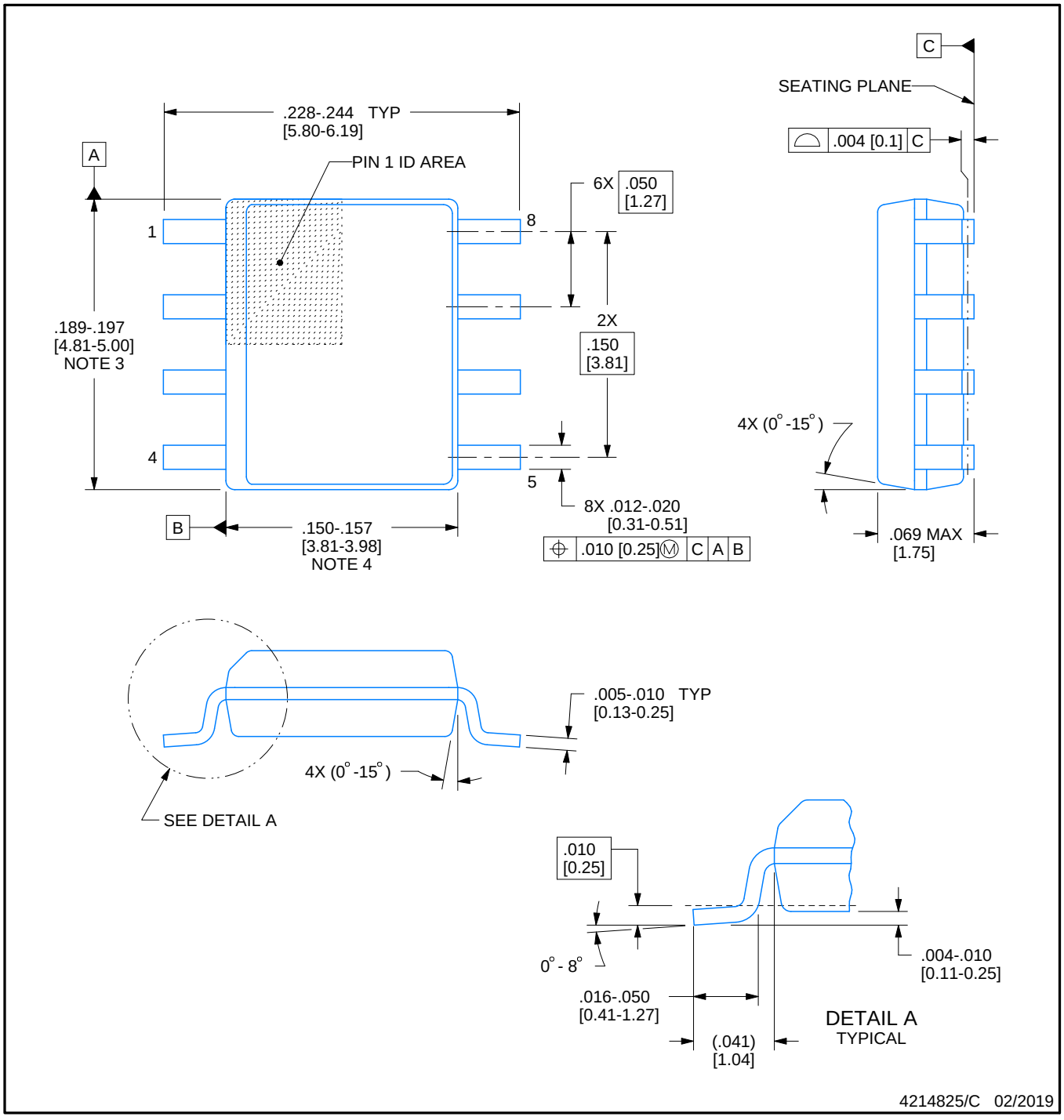

NOTES:

1. Linear dimensions are in inches [millimeters]. Dimensions in parenthesis are for reference only. Controlling dimensions are in inches. Dimensioning and tolerancing per ASME Y14.5M.
2. This drawing is subject to change without notice.
3. This dimension does not include mold flash, protrusions, or gate burrs. Mold flash, protrusions, or gate burrs shall not exceed .006 [0.15] per side.
4. This dimension does not include interlead flash.
5. Reference JEDEC registration MS-012, variation AA.

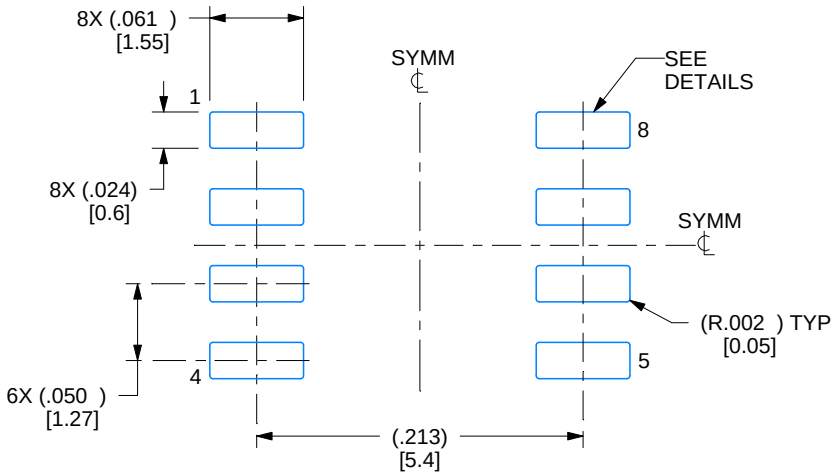

LAND PATTERN EXAMPLE
EXPOSED METAL SHOWN
SCALE:8X

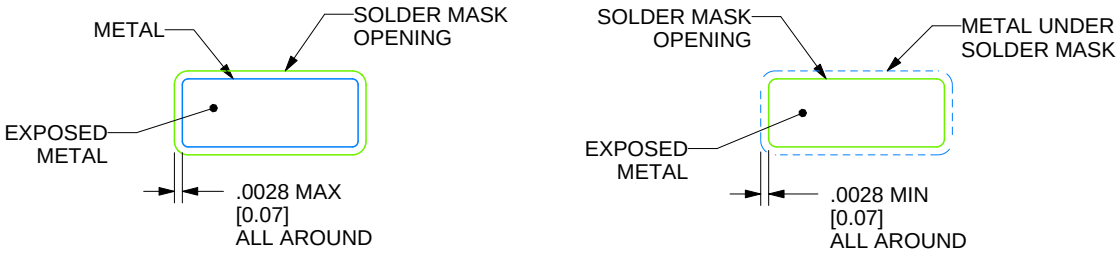

SOLDER MASK DETAILS

4214825/C 02/2019

NOTES: (continued)

6. Publication IPC-7351 may have alternate designs.
7. Solder mask tolerances between and around signal pads can vary based on board fabrication site.

EXAMPLE STENCIL DESIGN

D0008A

SOIC - 1.75 mm max height

SMALL OUTLINE INTEGRATED CIRCUIT

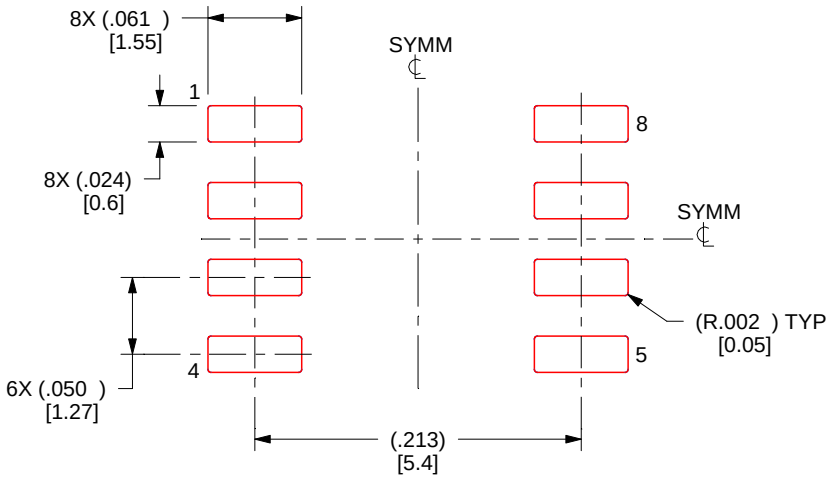

SOLDER PASTE EXAMPLE
BASED ON .005 INCH [0.125 MM] THICK STENCIL
SCALE:8X

4214825/C 02/2019

NOTES: (continued)

8. Laser cutting apertures with trapezoidal walls and rounded corners may offer better paste release. IPC-7525 may have alternate design recommendations.
9. Board assembly site may have different recommendations for stencil design.

PACKAGE OUTLINE

PW0014A

TSSOP - 1.2 mm max height

SMALL OUTLINE PACKAGE

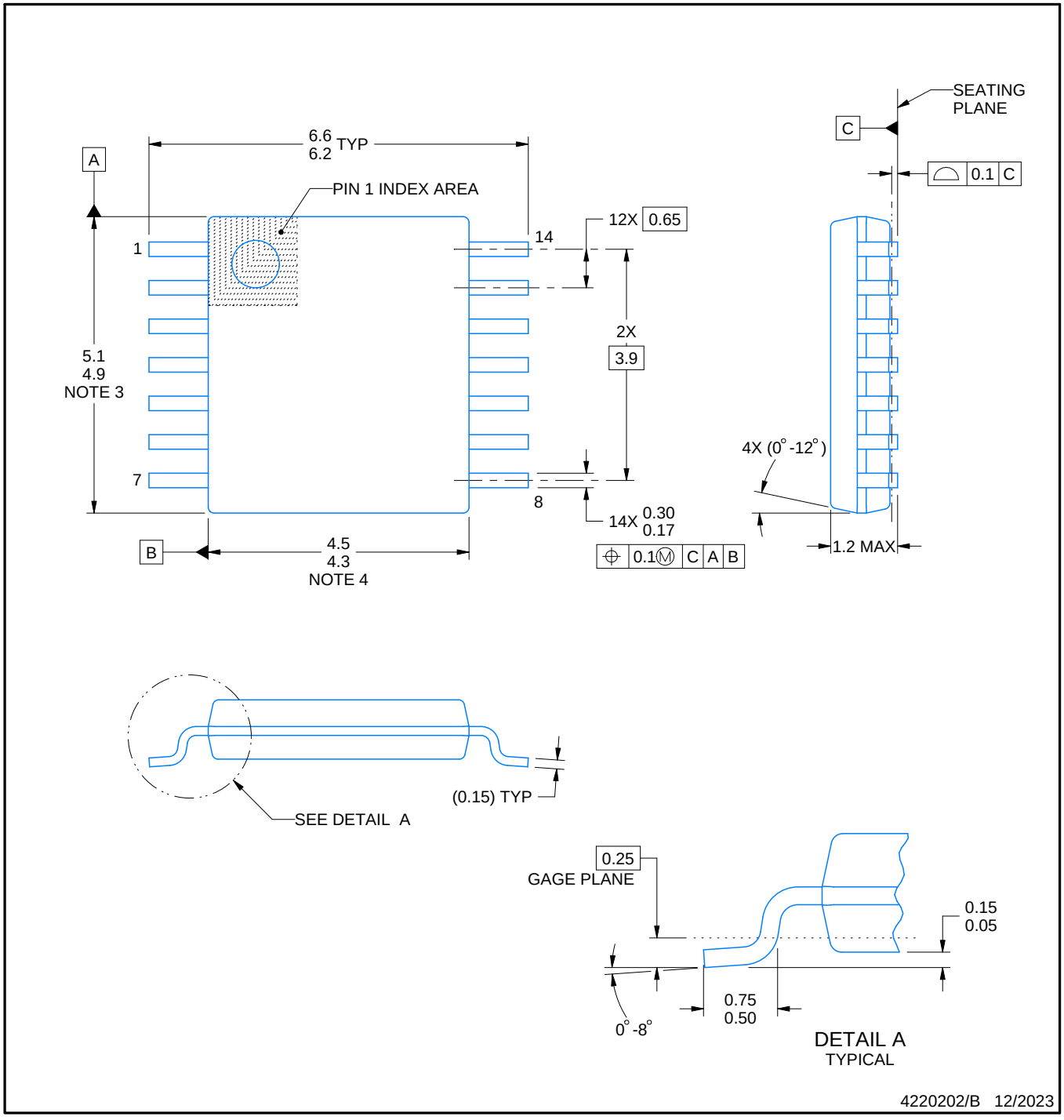

NOTES:

1. All linear dimensions are in millimeters. Any dimensions in parenthesis are for reference only. Dimensioning and tolerancing per ASME Y14.5M.
2. This drawing is subject to change without notice.
3. This dimension does not include mold flash, protrusions, or gate burrs. Mold flash, protrusions, or gate burrs shall not exceed 0.15 mm per side.
4. This dimension does not include interlead flash. Interlead flash shall not exceed 0.25 mm per side.
5. Reference JEDEC registration MO-153.

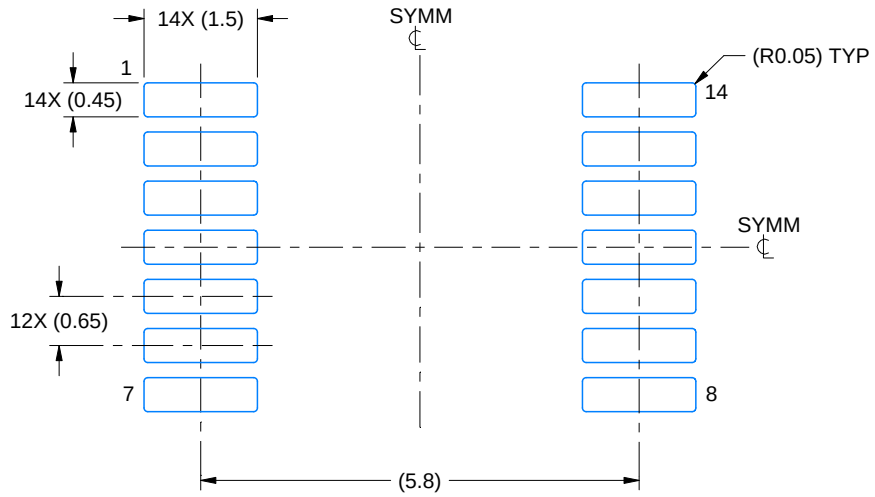

LAND PATTERN EXAMPLE
EXPOSED METAL SHOWN
SCALE: 10X

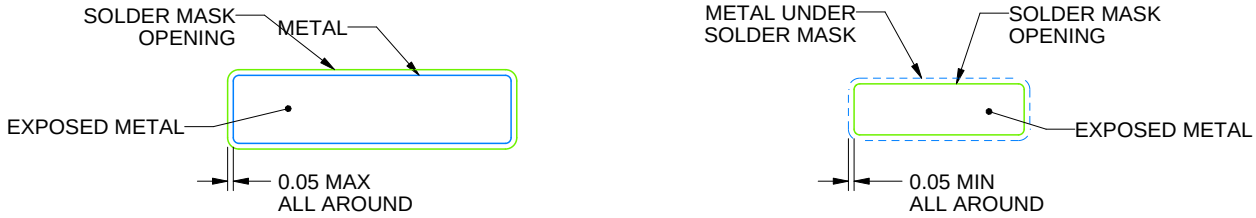

SOLDER MASK DETAILS

4220202/B 12/2023

NOTES: (continued)

6. Publication IPC-7351 may have alternate designs.
7. Solder mask tolerances between and around signal pads can vary based on board fabrication site.

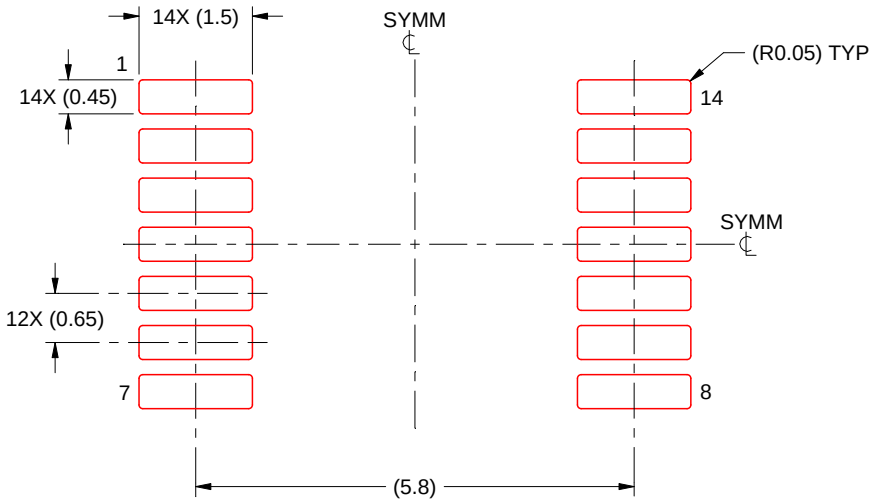

SOLDER PASTE EXAMPLE
BASED ON 0.125 mm THICK STENCIL
SCALE: 10X

4220202/B 12/2023

NOTES: (continued)

8. Laser cutting apertures with trapezoidal walls and rounded corners may offer better paste release. IPC-7525 may have alternate design recommendations.
9. Board assembly site may have different recommendations for stencil design.

PACKAGE OUTLINE

DGK0008A

VSSOP - 1.1 mm max height

SMALL OUTLINE PACKAGE

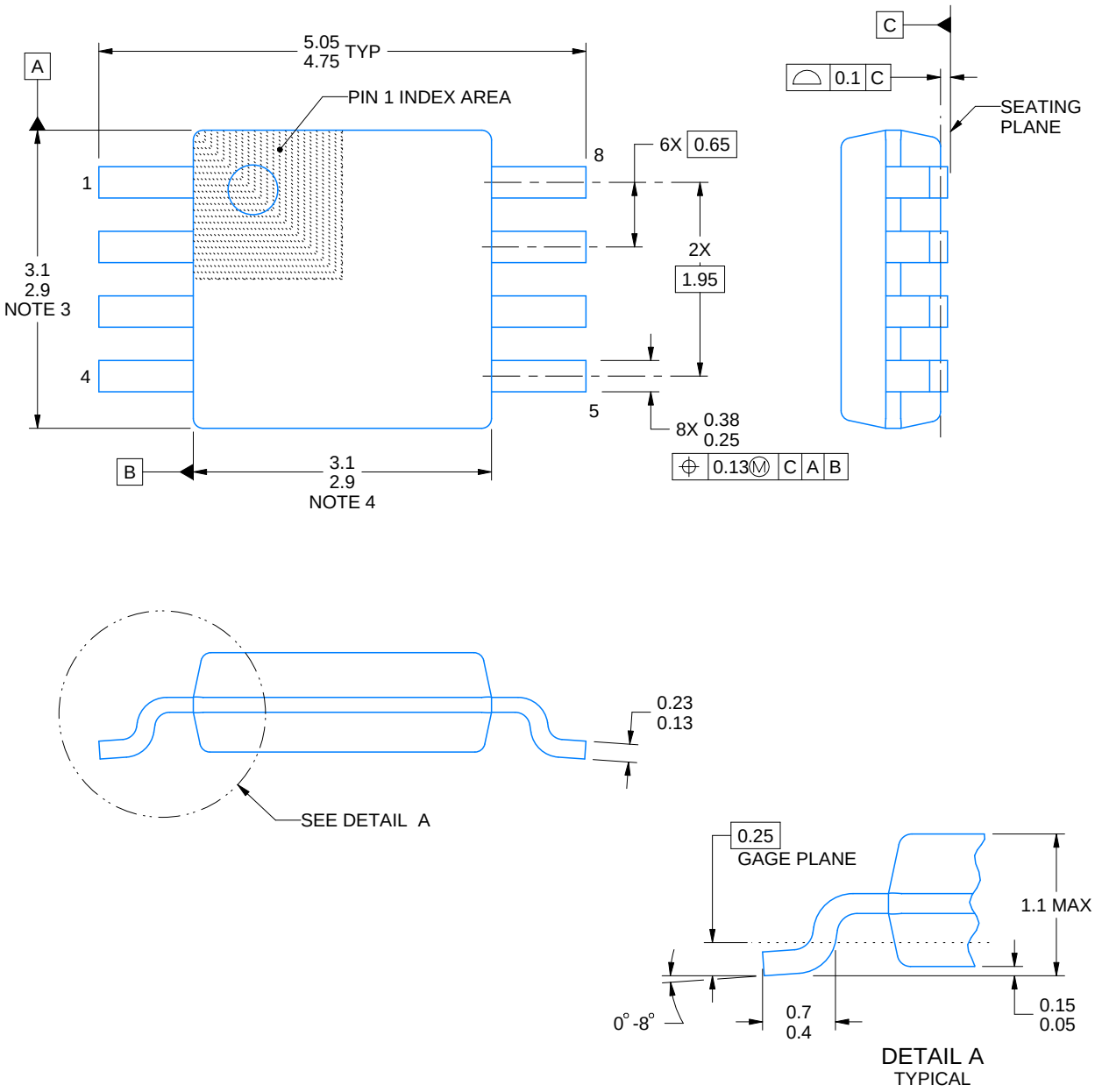

PowerPAD is a trademark of Texas Instruments.

NOTES:

1. All linear dimensions are in millimeters. Any dimensions in parenthesis are for reference only. Dimensioning and tolerancing per ASME Y14.5M.
2. This drawing is subject to change without notice.
3. This dimension does not include mold flash, protrusions, or gate burrs. Mold flash, protrusions, or gate burrs shall not exceed 0.15 mm per side.
4. This dimension does not include interlead flash. Interlead flash shall not exceed 0.25 mm per side.
5. Reference JEDEC registration MO-187.

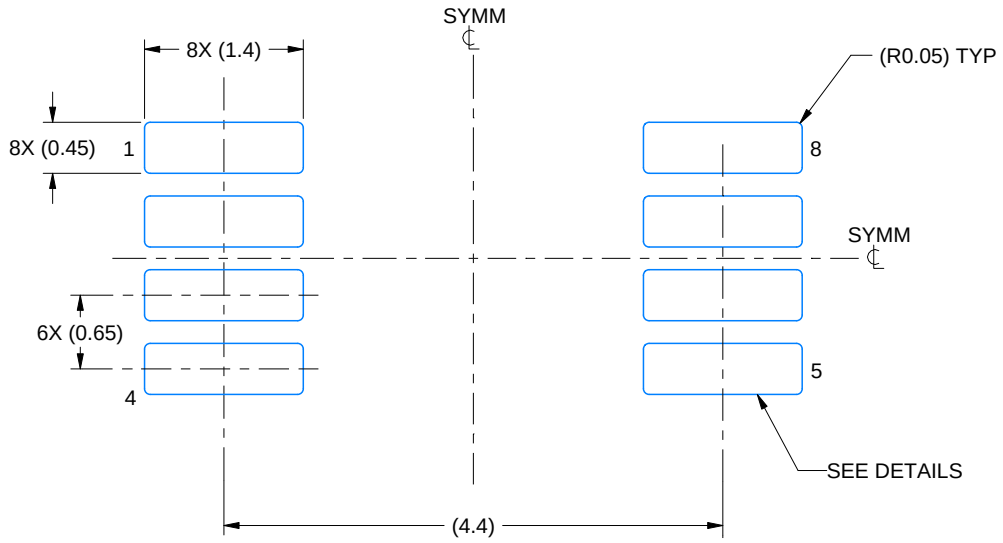

LAND PATTERN EXAMPLE
EXPOSED METAL SHOWN
SCALE: 15X

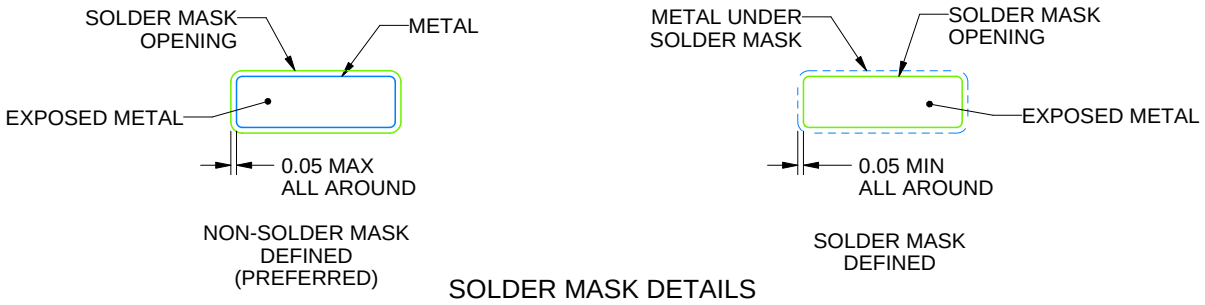

SOLDER MASK DETAILS

4214862/A 04/2023

NOTES: (continued)

6. Publication IPC-7351 may have alternate designs.
7. Solder mask tolerances between and around signal pads can vary based on board fabrication site.
8. Vias are optional depending on application, refer to device data sheet. If any vias are implemented, refer to their locations shown on this view. It is recommended that vias under paste be filled, plugged or tented.
9. Size of metal pad may vary due to creepage requirement.

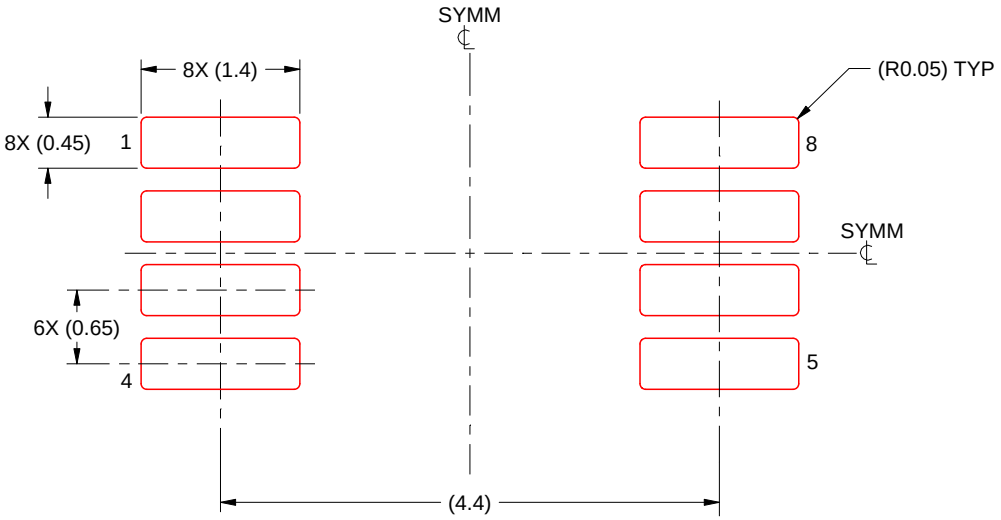

SOLDER PASTE EXAMPLE
SCALE: 15X

4214862/A 04/2023

NOTES: (continued)

11. Laser cutting apertures with trapezoidal walls and rounded corners may offer better paste release. IPC-7525 may have alternate design recommendations.
12. Board assembly site may have different recommendations for stencil design.

YZR0008

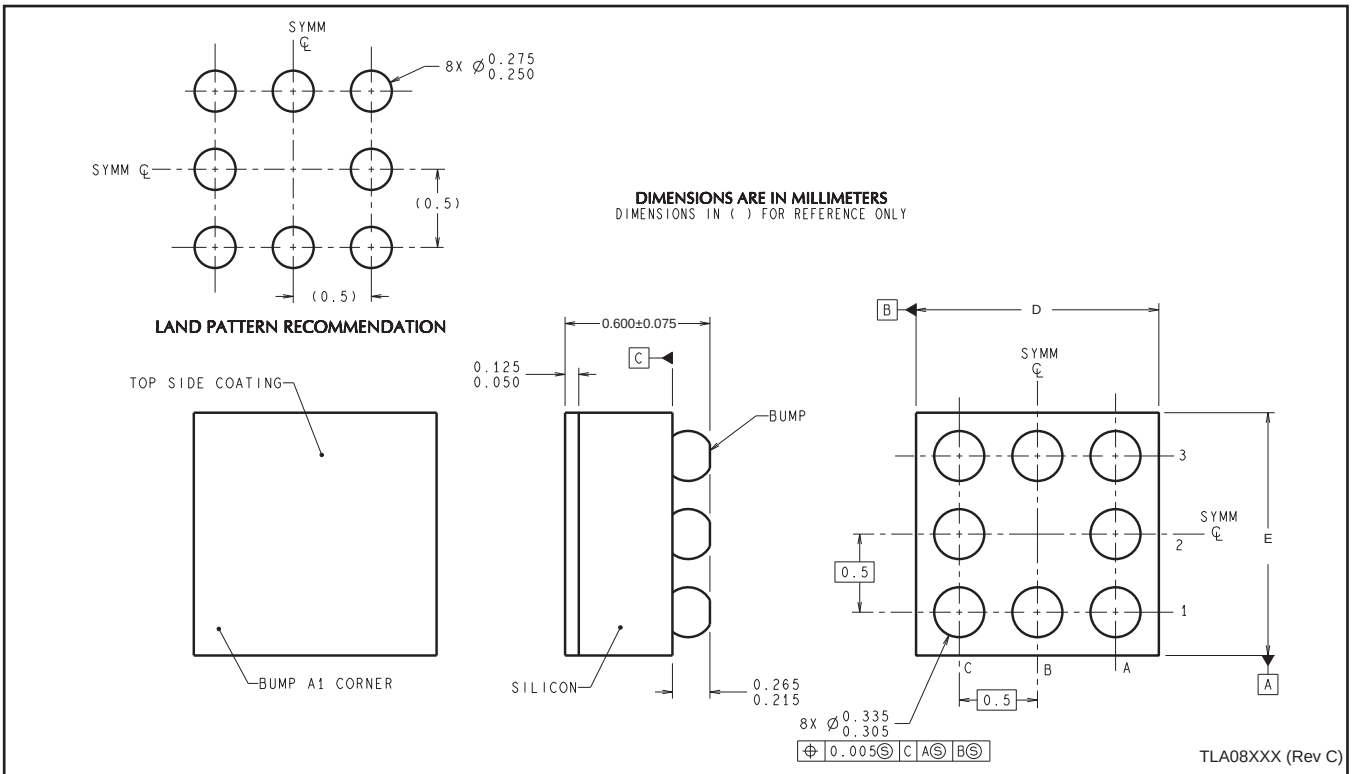

D: Max = 1.921 mm, Min = 1.86 mm

E: Max = 1.768 mm, Min =1.708 mm

4215045/A 12/12

NOTES: A. All linear dimensions are in millimeters. Dimensioning and tolerancing per ASME Y14.5M-1994.
B. This drawing is subject to change without notice.

重要なお知らせと免責事項

TI は、技術データと信頼性データ (データシートを含みます)、設計リソース (リファレンス デザインを含みます)、アプリケーションや設計に関する各種アドバイス、Web ツール、安全性情報、その他のリソースを、欠陥が存在する可能性のある「現状のまま」提供しており、商品性および特定目的に対する適合性の黙示保証、第三者の知的財産権の非侵害保証を含むいかなる保証も、明示的または黙示的にかかわらず拒否します。

これらのリソースは、TI 製品を使用する設計の経験を積んだ開発者への提供を意図したものです。(1) お客様のアプリケーションに適した TI 製品の選定、(2) お客様のアプリケーションの設計、検証、試験、(3) お客様のアプリケーションに該当する各種規格や、その他のあらゆる安全性、セキュリティ、規制、または他の要件への確実な適合に関する責任を、お客様のみが単独で負うものとします。

上記の各種リソースは、予告なく変更される可能性があります。これらのリソースは、リソースで説明されている TI 製品を使用するアプリケーションの開発の目的でのみ、TI はその使用をお客様に許諾します。これらのリソースに関して、他の目的で複製することや掲載することは禁止されています。TI や第三者の知的財産権のライセンスが付与されている訳ではありません。お客様は、これらのリソースを自身で使用した結果発生するあらゆる申し立て、損害、費用、損失、責任について、TI およびその代理人を完全に補償するものとし、TI は一切の責任を拒否します。

TI の製品は、 TI の販売条件 、 TI の総合的な品質ガイドライン 、 ti.com または TI 製品などに関連して提供される他の適用条件に従い提供されます。TI がこれらのリソースを提供することは、適用される TI の保証または他の保証の放棄の拡大や変更を意味するものではありません。 TI がカスタム、またはカスタマー仕様として明示的に指定していない限り、TI の製品は標準的なカタログに掲載される汎用機器です。

お客様がいかなる追加条項または代替条項を提案する場合も、TI はそれらに異議を唱え、拒否します。

Copyright © 2026, Texas Instruments Incorporated

最終更新日：2025 年 10 月