LMV321A-Q1 / LMV358A-Q1 / LMV324A-Q1 車載用低電圧レール・ツー・レール出力オペアンプ

1 特長

- 車載アプリケーション向けに AEC-Q100 認証済み
  - 温度グレード 1:–40℃～+125℃、TA
  - デバイス HBM ESD 分類レベル 2
  - デバイス CDM ESD 分類レベル C6
- 低入力オフセット電圧:±1mV
- レール・ツー・レール出力
- ユニティ・ゲイン帯域幅:1MHz
- 低広帯域ノイズ:30nV/√Hz
- 低入力バイアス電流:10pA
- 低い静止電流:70μA/Ch
- ユニティ・ゲイン安定
- 内部 RFI および EMI フィルタ
- 最低 2.5V の電源電圧で動作
- 抵抗性の開ループ出力インピーダンスにより、大きな容量性負荷で簡単に安定
- 拡張温度範囲:–40℃～125℃

2 アプリケーション

- AEC-Q100 グレード 1 アプリケーションに最適化
- インフォテインメントおよびクラスタ
- パッシブ型安全運転支援システム
- ボディ・エレクトロニクスおよび照明
- HEV/EV のインバータおよびモータ制御
- オンボード・チャージャ (OBC) およびワイヤレス・チャージャ
- パワートレイン電流センサ
- 先進運転支援システム (ADAS)
- 単一電源、ローサイド、単方向電流センシング回路

3 概要

LMV3xxA-Q1 ファミリには、出力をレール・ツー・レールでスイングできる、シングル (LMV321A-Q1)、デュアル (LMV358A-Q1)、クワッド・チャネル (LMV324A-Q1) の低電圧 (2.5V～5.5V) 車載用オペアンプがあります。これらのオペアンプは、インフォテインメントや照明など、低電圧での動作と大きな容量性負荷の駆動が必要で、スペースの制約が厳しいアプリケーション向けにコスト効率の優れた方法を提供します。LMV3xxA-Q1 ファミリの容量性負荷の駆動能力は 500pF であり、オープン・ループ出力インピーダンスが抵抗性なので、はるかに大きな容量性負荷についても容易に安定化できます。これらのオペアンプは低電圧 (2.5V～5.5V) で動作し、LMV3xx-Q1 デバイスと同様の性能仕様を満たすよう、特別に設計されています。

LMV3xxA-Q1 ファミリは堅牢に設計されているため、回路設計を簡素化できます。これらのオペアンプには、ユニティ・ゲイン安定性、内蔵された RFI および EMI 除去フィルタ、オーバードライブ条件で位相反転が発生しないという特長があります。

LMV3xxA-Q1 ファミリは、SOIC、MSOP、SOT-23、TSSOP などの業界標準パッケージで供給されます。

パッケージ情報 (1)

部品番号	パッケージ	本体サイズ (公称)
LMV321A-Q1	DBV (SOT-23、5)	1.60mm x 2.90mm
	DCK (SC70、5)	1.25mm × 2.00mm
LMV358A-Q1	D (SOIC、8)	3.91mm × 4.90mm
	DGK (VSSOP、8)	3.00mm × 3.00mm
LMV324A-Q1	D (SOIC、14)	8.65mm × 3.91mm
	PW (TSSOP、14)	4.40mm x 5.00mm
	DYY (SOT-23、14)	4.20mm × 1.90mm

(1) 利用可能なすべてのパッケージについては、データシートの末尾にある注文情報を参照してください。

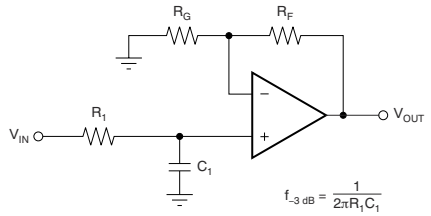

$$\frac{V_{OUT}}{V_{IN}} = \left(1 + \frac{R_F}{R_G}\right)\left(\frac{1}{1 + sR_1C_1}\right)$$

単極ローパス・フィルタ

英語版の TI 製品についての情報を翻訳したこの資料は、製品の概要を確認する目的で便宜的に提供しているものです。該当する正式な英語版の最新情報は、www.ti.com で閲覧でき、その内容が常に優先されます。TI では翻訳の正確性および妥当性につきましては一切保証いたしません。実際の設計などの前には、必ず最新版の英語版をご参照くださいますようお願いいたします。

Table of Contents

1 特長 ... 1
2 アプリケーション ... 1
3 概要 ... 1
4 Revision History ... 2
5 Pin Configuration and Functions ... 3
6 Specifications ... 5
6.1 Absolute Maximum Ratings ... 5
6.2 ESD Ratings ... 5
6.3 Recommended Operating Conditions ... 5
6.4 Thermal Information: LMV321A-Q1 ... 6
6.5 Thermal Information: LMV358A-Q1 ... 6
6.6 Thermal Information: LMV324A-Q1 ... 6
6.7 Electrical Characteristics ... 7
6.8 Typical Characteristics ... 8
7 Detailed Description ... 14
7.1 Overview ... 14
7.2 Functional Block Diagram ... 14
7.3 Feature Description ... 15
7.4 Device Functional Modes ... 15
8 Application and Implementation ... 16
8.1 Application Information ... 16
8.2 Typical Application ... 16
9 Power Supply Recommendations ... 21
9.1 Input and ESD Protection ... 21
10 Layout ... 22
10.1 Layout Guidelines ... 22
10.2 Layout Example ... 22
11 Device and Documentation Support ... 23
11.1 Documentation Support ... 23
11.2 Receiving Notification of Documentation Updates ... 23
11.3 サポート・リソース ... 23
11.4 Trademarks ... 23
11.5 静電気放電に関する注意事項 ... 23
11.6 用語集 ... 23
12 Mechanical, Packaging, and Orderable Information ... 23

4 Revision History

資料番号末尾の英字は改訂を表しています。その改訂履歴は英語版に準じています。

Changes from Revision C (January 2023) to Revision D (April 2023) — **Page**

- DBV パッケージのステータスをプレビューからアクティブに変更 ... 1

Changes from Revision B (October 2021) to Revision C (January 2023) — **Page**

- 「製品情報」表の SC70 (5) パッケージからプレビュー注記を削除 ... 1
- Changed the formatting of the *Pin Configuration and Functions* section ... 3
- Changed values in *Thermal Information: LMV321A-Q1* table ... 6

Changes from Revision A (April 2021) to Revision B (October 2021) — **Page**

- データシートに LMV321A-Q1 GPN を追加 ... 1
- 「製品情報」表に SOT-23 (5) および SC70 (5) パッケージを追加 ... 1
- 「製品情報」表の SOT-23 (14) および TSSOP (14) パッケージからプレビュー注記を削除 ... 1
- Added LMV321A-Q1 SOT-23 (5), SC70 (5), and LMV321AU-Q1 SOT-23 (5) Packages, to *Pin Configuration and Functions* section ... 3
- Added *Thermal Information: LMV321A-Q1* table ... 6

Changes from Revision * (June 2020) to Revision A (April 2021) — **Page**

- 文書全体にわたって表、図、相互参照の採番方法を更新 ... 1
- 「製品情報」表の VSSOP (8) パッケージからプレビュー注記を削除 ... 1
- 「製品情報」表から SOT-23 (8)、TSSOP (8)、SOT-23 (5)、SC70 (5) パッケージを削除 ... 1
- Deleted TSSOP (8) Package, from *Pin Configuration and Functions* section ... 3
- Added note (4) to differential input voltage in *Absolute Maximum Ratings* table ... 5
- Added thermal information for DGK package ... 6
- Added thermal information for DYY package ... 6

Copyright © 2023 Texas Instruments Incorporated

5 Pin Configuration and Functions

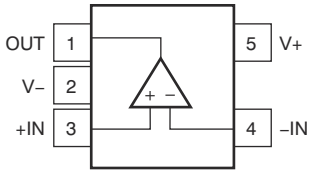

図 5-1. LMV321A-Q1 DBV Package, 5-Pin SOT-23 (Top View)

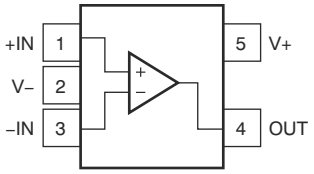

図 5-2. LMV321A-Q1 DCK, LMV321AU-Q1 DBV Package, 5-Pin SC70, SOT-23 (Top View)

表 5-1. Pin Functions: LMV321A-Q1

PIN			TYPE (1)	DESCRIPTION
NAME	DBV	DCK, DBV (U)		
–IN	4	3	I	Inverting input
+IN	3	1	I	Non-inverting input
OUT	1	4	O	Output
V–	2	2	—	Negative (lowest) supply or ground (for single-supply operation)
V+	5	5	—	Positive (highest) supply

(1) I = input, O = output

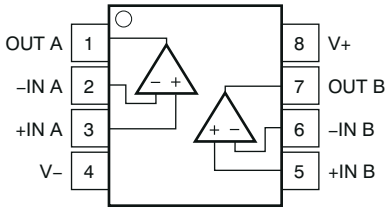

図 5-3. LMV358A-Q1 D and DGK Packages, 8-Pin SOIC and VSSOP (Top View)

表 5-2. Pin Functions: LMV358A-Q1

PIN		TYPE(1)	DESCRIPTION
NAME	NO.		
–IN A	2	I	Inverting input, channel A
+IN A	3	I	Non-inverting input, channel A
–IN B	6	I	Inverting input, channel B
+IN B	5	I	Non-inverting input, channel B
OUT A	1	O	Output, channel A
OUT B	7	O	Output, channel B
V–	4	—	Negative (lowest) supply or ground (for single-supply operation)
V+	8	—	Positive (highest) supply

(1) I = input, O = output

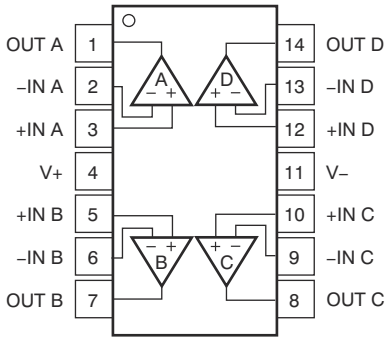

図 5-4. LMV324A-Q1 D, PW, and DYY Packages, 14-Pin SOIC, TSSOP, and SOT-23 (Top View)

表 5-3. Pin Functions: LMV324A-Q1

PIN		TYPE(1)	DESCRIPTION
NAME	NO.		
–IN A	2	I	Inverting input, channel A
+IN A	3	I	Non-inverting input, channel A
–IN B	6	I	Inverting input, channel B
+IN B	5	I	Non-inverting input, channel B
–IN C	9	I	Inverting input, channel C
+IN C	10	I	Non-inverting input, channel C
–IN D	13	I	Inverting input, channel D
+IN D	12	I	Non-inverting input, channel D
OUT A	1	O	Output, channel A
OUT B	7	O	Output, channel B
OUT C	8	O	Output, channel C
OUT D	14	O	Output, channel D
V–	11	—	Negative (lowest) supply or ground (for single-supply operation)
V+	4	—	Positive (highest) supply

(1) I = input, O = output

Copyright © 2023 Texas Instruments Incorporated

6 Specifications

6.1 Absolute Maximum Ratings

over operating temperature range (unless otherwise noted)[1]

			MIN	MAX	UNIT
Supply voltage, ([V+] – [V–])			0	6	V
Signal input pins	Voltage[2]	Common-mode	(V–) – 0.5	(V+) + 0.5	V
		Differential[4]		(V+) – (V–) + 0.2	V
	Current[2]		–10	10	mA
Output short-circuit[3]			Continuous		
Operating, T_A			–55	150	°C
Operating junction temperature, T_J				150	°C
Storage temperature, T_{stg}			–65	150	°C

(1) Stresses beyond those listed under *Absolute Maximum Ratings* may cause permanent damage to the device. These are stress ratings only, and functional operation of the device at these or any other conditions beyond those indicated under *Recommended Operating Conditions* is not implied. Exposure to absolute-maximum-rated conditions for extended periods may affect device reliability.
(2) Input pins are diode-clamped to the power-supply rails. Input signals that may swing more than 0.5 V beyond the supply rails must be current limited to 10 mA or less.
(3) Short-circuit to ground, one amplifier per package.
(4) Differential input voltages greater than 0.5 V applied continuously can result in a shift to the input offset voltage and quiescent current above the maximum specifications of these parameters. The magnitude of this effect increases as the ambient operating temperature rises.

6.2 ESD Ratings

			VALUE	UNIT
$V_{(ESD)}$	Electrostatic discharge	Human-body model (HBM), per AEC Q100-002 HBM ESD Classification Level 2[1]	±2000	V
		Charged-device model (CDM), per AEC Q100-011 CDM ESD Classification Level C5	±1000	

(1) AEC Q100-002 indicates that HBM stressing shall be in accordance with ANSI/ESDA/JEDEC JS-001 Specification

6.3 Recommended Operating Conditions

over operating temperature range (unless otherwise noted)

		MIN	MAX	UNIT
V_S	Supply voltage	2.5	5.5	V
T_A	Specified temperature	–40	125	°C

6.4 Thermal Information: LMV321A-Q1

THERMAL METRIC[1]		LMV321A-Q1		UNIT
		DBV (SOT-23)	DCK (SC70)	
		5 PINS	5 PINS	
$R_{\theta JA}$	Junction-to-ambient thermal resistance	232.5	246.6	°C/W
$R_{\theta JC(top)}$	Junction-to-case (top) thermal resistance	131.0	157.5	°C/W
$R_{\theta JB}$	Junction-to-board thermal resistance	99.6	95.4	°C/W
ψ_{JT}	Junction-to-top characterization parameter	66.5	68.8	°C/W
ψ_{JB}	Junction-to-board characterization parameter	99.1	95.0	°C/W

(1) For more information about traditional and new thermal metrics, see *Semiconductor and IC Package Thermal Metrics*.

6.5 Thermal Information: LMV358A-Q1

THERMAL METRIC[1]		LMV358A-Q1		UNIT
		D (SOIC)	DGK (VSSOP)	
		8 PINS	8 PINS	
$R_{\theta JA}$	Junction-to-ambient thermal resistance	151.9	196.6	°C/W
$R_{\theta JC(top)}$	Junction-to-case (top) thermal resistance	92.0	86.2	°C/W
$R_{\theta JB}$	Junction-to-board thermal resistance	95.4	118.3	°C/W
ψ_{JT}	Junction-to-top characterization parameter	40.2	23.2	°C/W
ψ_{JB}	Junction-to-board characterization parameter	94.7	116.7	°C/W

(1) For more information about traditional and new thermal metrics, see *Semiconductor and IC Package Thermal Metrics*.

6.6 Thermal Information: LMV324A-Q1

THERMAL METRIC[1]		LMV324A-Q1			UNIT
		D (SOIC)	PW (TSSOP)	DYY (SOT-23)	
		14 PINS	14 PINS	14 PINS	
$R_{\theta JA}$	Junction-to-ambient thermal resistance	115.1	135.3	154.3	°C/W
$R_{\theta JC(top)}$	Junction-to-case (top) thermal resistance	71.2	63.5	86.8	°C/W
$R_{\theta JB}$	Junction-to-board thermal resistance	71.1	78.4	67.9	°C/W
ψ_{JT}	Junction-to-top characterization parameter	29.6	13.6	10.1	°C/W
ψ_{JB}	Junction-to-board characterization parameter	70.7	77.9	67.5	°C/W

Copyright © 2023 Texas Instruments Incorporated

6.7 Electrical Characteristics

For V_S = (V+) – (V–) = 2.5 V to 5.5 V (±0.9 V to ±2.75 V), T_A = 25°C, R_L = 10 kΩ connected to V_S / 2, and V_{CM} = V_{OUT} = V_S / 2 (unless otherwise noted)

PARAMETER		TEST CONDITIONS	MIN	TYP	MAX	UNIT
OFFSET VOLTAGE						
V_{OS}	Input offset voltage	Vs = 5 V		±1	±4	mV
		Vs = 5 V, T_A = –40°C to 125°C			±5	
dV_{OS}/dT	V_{OS} vs temperature	T_A = –40°C to 125°C		±1		μV/°C
PSRR	Power-supply rejection ratio	V_S = 2.5 to 5.5 V, V_{CM} = (V–)	78	100		dB
INPUT VOLTAGE RANGE						
V_{CM}	Common-mode voltage range	No phase reversal, rail-to-rail input	(V–) – 0.1		(V+) – 1	V
CMRR	Common-mode rejection ratio	V_S = 2.5 V, (V–) – 0.1 V < V_{CM} < (V+) – 1.4 V T_A = –40°C to 125°C		86		dB
		V_S = 5.5 V, (V–) – 0.1 V < V_{CM} < (V+) – 1.4 V T_A = –40°C to 125°C		95		
		V_S = 5.5 V, (V–) – 0.1 V < V_{CM} < (V+) + 0.1 V T_A = –40°C to 125°C	63	77		
		V_S = 2.5 V, (V–) – 0.1 V < V_{CM} < (V+) + 0.1 V T_A = –40°C to 125°C		68		
INPUT BIAS CURRENT						
I_B	Input bias current	Vs = 5 V		±10		pA
I_{OS}	Input offset current			±3		pA
NOISE						
E_n	Input voltage noise (peak-to-peak)	f = 0.1 Hz to 10 Hz, Vs = 5 V		5.1		$μV_{PP}$
e_n	Input voltage noise density	f = 1 kHz, Vs = 5 V		33		nV/√Hz
		f = 10 kHz, Vs = 5 V		30		
i_n	Input current noise density	f = 1 kHz, Vs = 5 V		25		fA/√Hz
INPUT CAPACITANCE						
C_{ID}	Differential			1.5		pF
C_{IC}	Common-mode			5		pF
OPEN-LOOP GAIN						
A_{OL}	Open-loop voltage gain	V_S = 5.5 V, (V–) + 0.05 V < V_O < (V+) – 0.05 V, R_L = 10 kΩ	100	115		dB
		V_S = 2.5 V, (V–) + 0.04 V < V_O < (V+) – 0.04 V, R_L = 10 kΩ		98		
		V_S = 2.5 V, (V–) + 0.1 V < V_O < (V+) – 0.1 V, R_L = 2 kΩ		112		
		V_S = 5.5 V, (V–) + 0.15 V < V_O < (V+) – 0.15 V, R_L = 2 kΩ		128		
FREQUENCY RESPONSE						
GBW	Gain-bandwidth product	Vs = 5 V		1		MHz
$φ_m$	Phase margin	V_S = 5.5 V, G = 1		76		°
SR	Slew rate	Vs = 5 V		1.7		V/μs
t_S	Settling time	To 0.1%, V_S = 5 V, 2-V step , G = +1, C_L = 100 pF		3		μs
		To 0.01%, V_S = 5 V, 2-V step , G = +1, C_L = 100 pF		4		
t_{OR}	Overload recovery time	V_S = 5 V, V_{IN} × gain > V_S		0.9		μs
THD+N	Total harmonic distortion + noise	V_S = 5.5 V, V_{CM} = 2.5 V, V_O = 1 V_{RMS}, G = +1, f = 1 kHz, 80-kHz measurement BW		0.005%		
OUTPUT						
V_O	Voltage output swing from supply rails	V_S = 5.5 V, R_L = 10 kΩ		20	50	mV
		V_S = 5.5 V, R_L = 2 kΩ		40	75	
I_{SC}	Short-circuit current	Vs = 5.5 V		±40		mA
Z_O	Open-loop output impedance	Vs = 5 V, f = 1 MHz		1200		Ω
POWER SUPPLY						
V_S	Specified voltage range		2.5 (±1.25)		5.5 (±2.75)	V
I_Q	Quiescent current per amplifier	I_O = 0 mA, V_S = 5.5 V		70	125	μA
		I_O = 0 mA, V_S = 5.5 V, T_A = –40°C to 125°C			150	
	Power-on time	V_S = 0 V to 5 V, to 90% I_Q level		50		μs

Copyright © 2023 Texas Instruments Incorporated

6.8 Typical Characteristics

at T_A = 25°C, V+ = 2.75 V, V– = –2.75 V, R_L = 10 kΩ connected to V_S / 2, V_{CM} = V_S / 2, and V_{OUT} = V_S / 2 (unless otherwise noted)

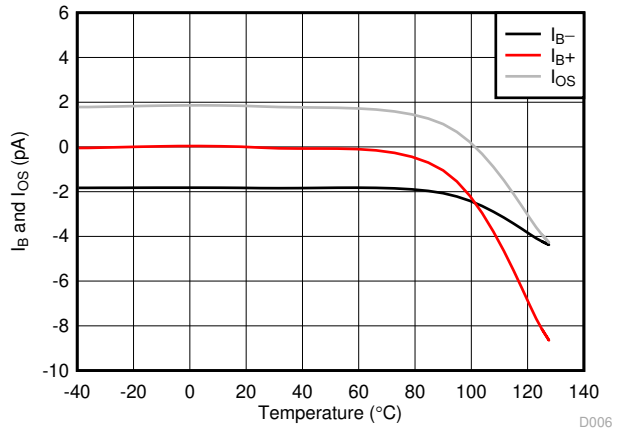

図 6-1. I_B and I_{OS} vs Temperature

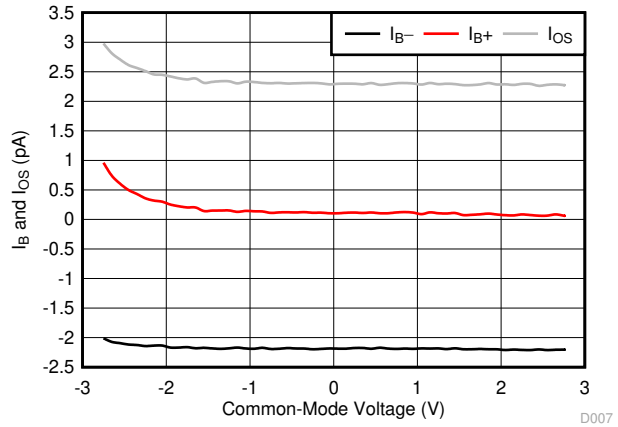

図 6-2. I_B and I_{OS} vs Common-Mode Voltage

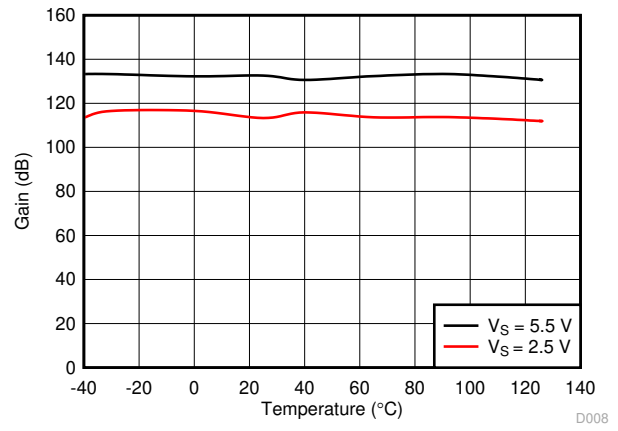

図 6-3. Open-Loop Gain vs Temperature

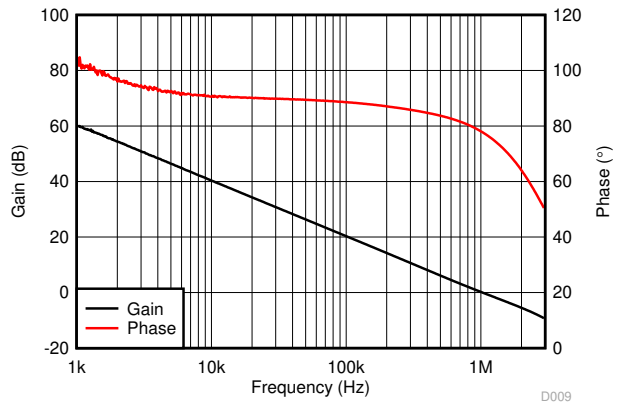

C_L = 10 pF

図 6-4. Open-Loop Gain and Phase vs Frequency

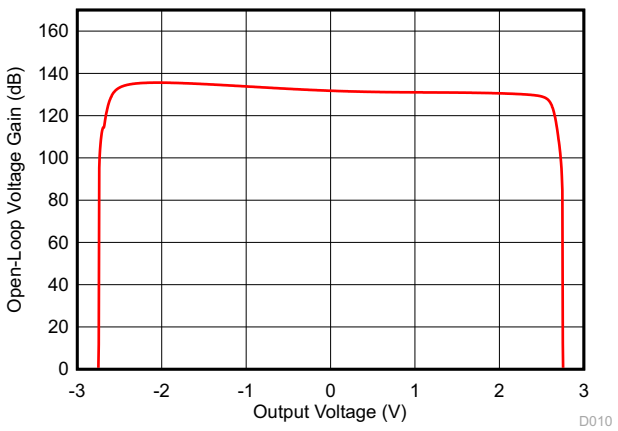

図 6-5. Open-Loop Gain vs Output Voltage

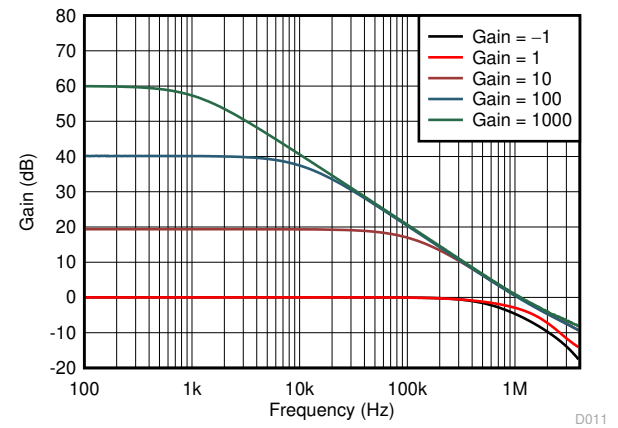

C_L = 10 pF

図 6-6. Closed-Loop Gain vs Frequency

Copyright © 2023 Texas Instruments Incorporated

6.8 Typical Characteristics (continued)

at T_A = 25°C, V+ = 2.75 V, V– = –2.75 V, R_L = 10 kΩ connected to V_S / 2, V_{CM} = V_S / 2, and V_{OUT} = V_S / 2 (unless otherwise noted)

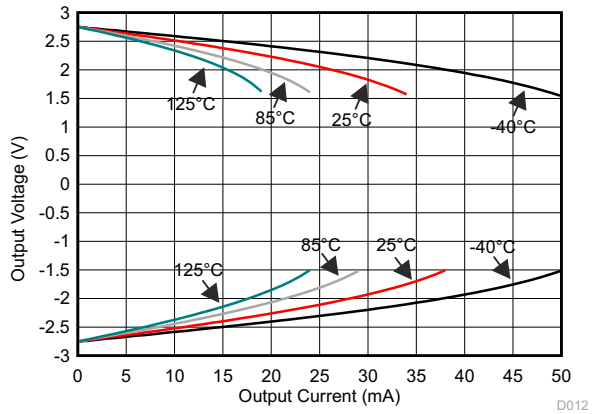

図 6-7. Output Voltage vs Output Current (Claw)

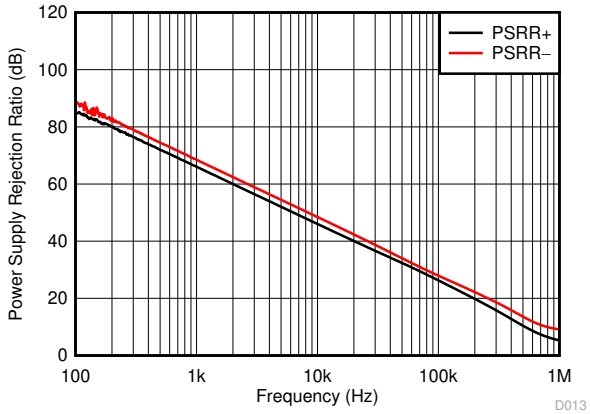

図 6-8. PSRR vs Frequency

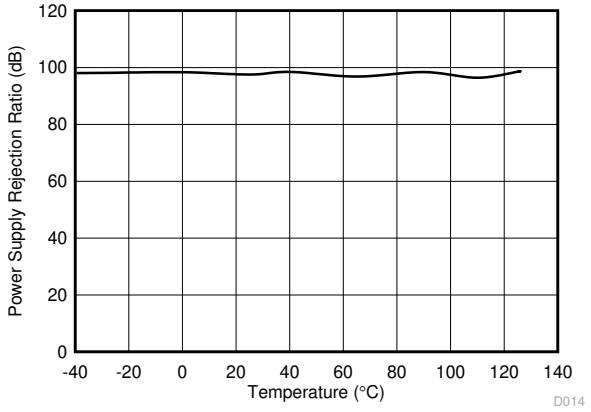

V_S = 1.8 V to 5.5 V

図 6-9. DC PSRR vs Temperature

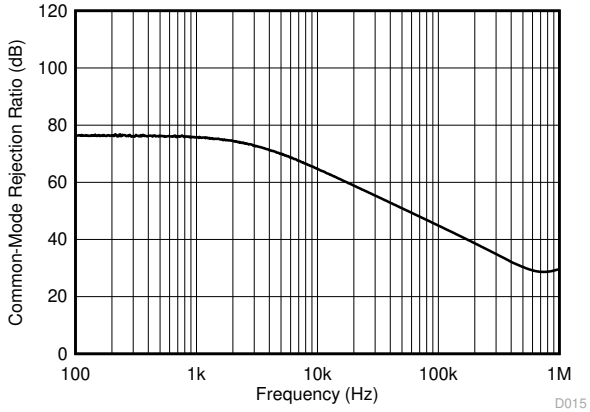

図 6-10. CMRR vs Frequency

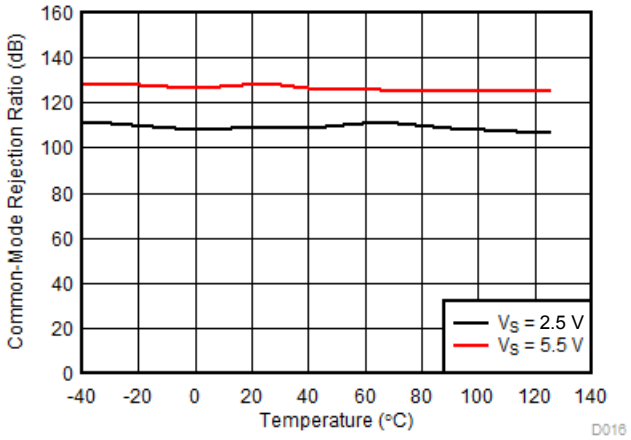

V_{CM} = (V–) – 0.1 V to (V+) – 1.4 V

図 6-11. DC CMRR vs Temperature

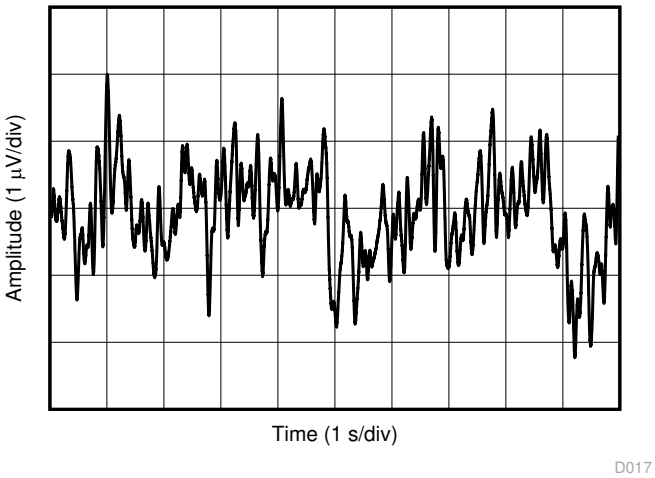

図 6-12. 0.1 Hz to 10 Hz Integrated Voltage Noise

6.8 Typical Characteristics (continued)

at T_A = 25°C, V+ = 2.75 V, V– = –2.75 V, R_L = 10 kΩ connected to V_S / 2, V_{CM} = V_S / 2, and V_{OUT} = V_S / 2 (unless otherwise noted)

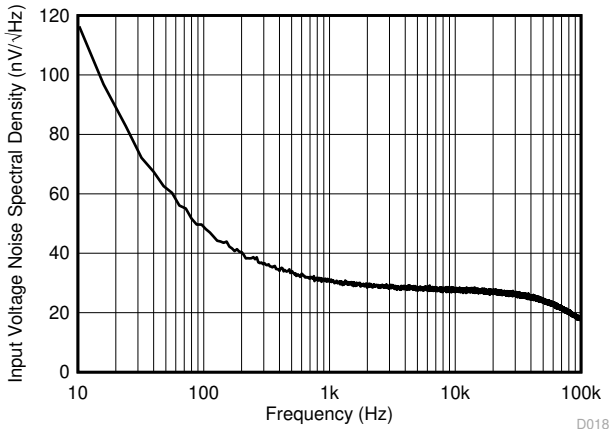

図 6-13. Input Voltage Noise Spectral Density

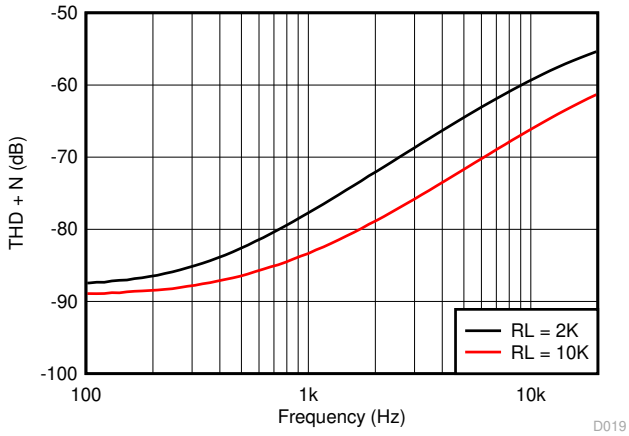

V_S = 5.5 V, V_{CM} = 2.5 V, G = 1, BW = 80 kHz, V_{OUT} = 0.5 V_{RMS}

図 6-14. THD + N vs Frequency

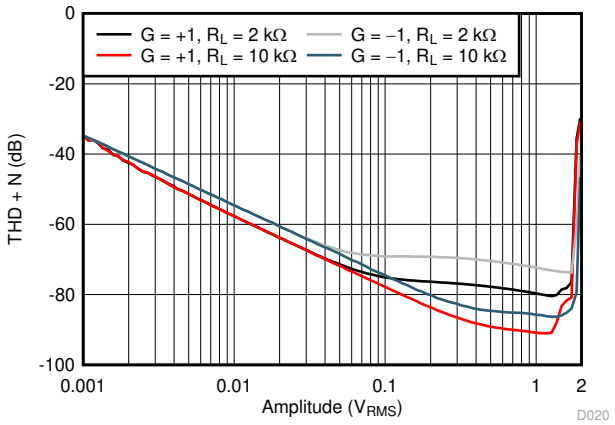

V_S = 5.5 V, V_{CM} = 2.5 V, f = 1 kHz, G = 1, BW = 80 kHz

図 6-15. THD + N vs Amplitude

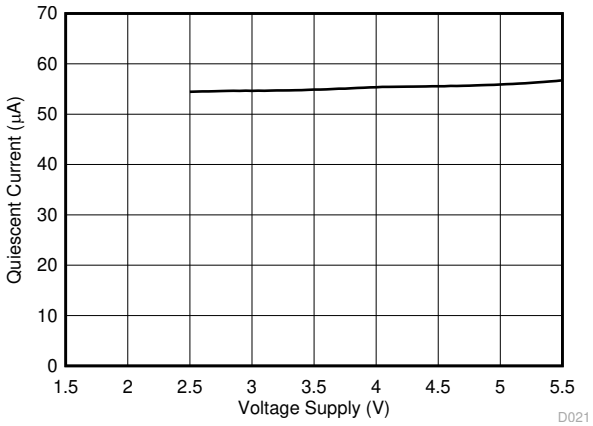

図 6-16. Quiescent Current vs Supply Voltage

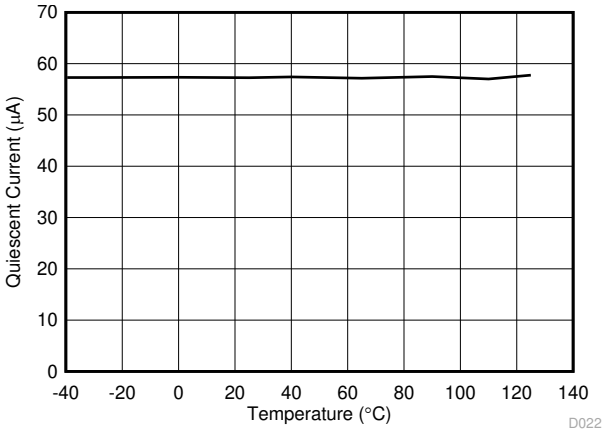

図 6-17. Quiescent Current vs Temperature

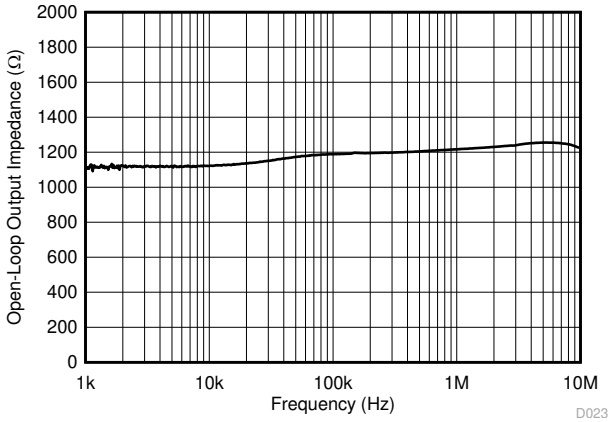

図 6-18. Open-Loop Output Impedance vs Frequency

Copyright © 2023 Texas Instruments Incorporated

6.8 Typical Characteristics (continued)

at T_A = 25°C, V+ = 2.75 V, V– = –2.75 V, R_L = 10 kΩ connected to V_S / 2, V_{CM} = V_S / 2, and V_{OUT} = V_S / 2 (unless otherwise noted)

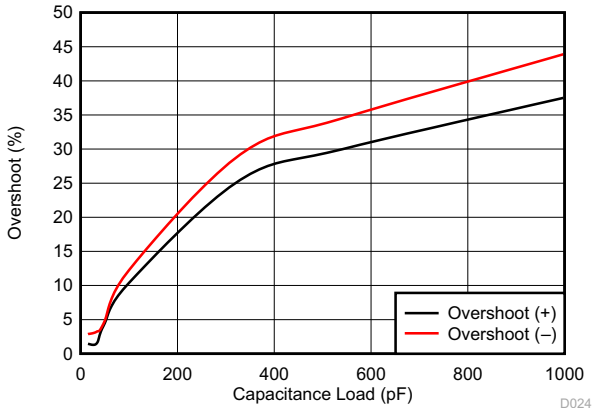

G = 1, V_{IN} = 100 mVpp

図 6-19. Small Signal Overshoot vs Capacitive Load

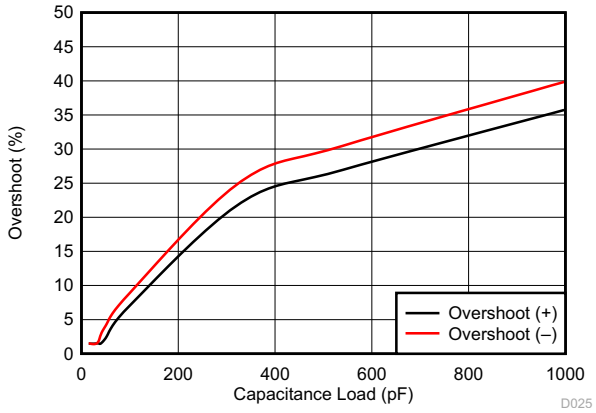

G = –1, V_{IN} = 100 mVpp

図 6-20. Small Signal Overshoot vs Capacitive Load

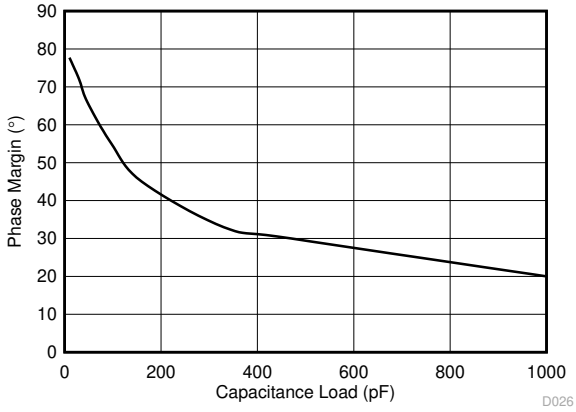

図 6-21. Phase Margin vs Capacitive Load

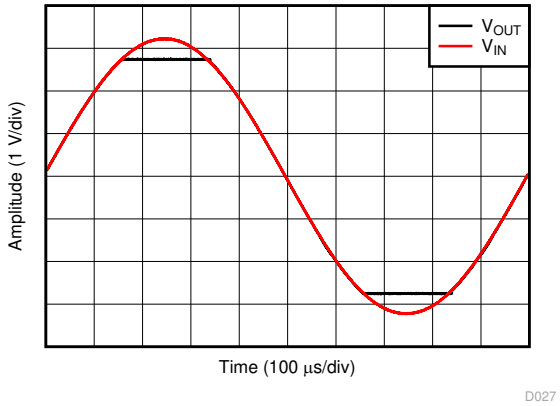

G = 1, V_{IN} = 6.5 V_{PP}

図 6-22. No Phase Reversal

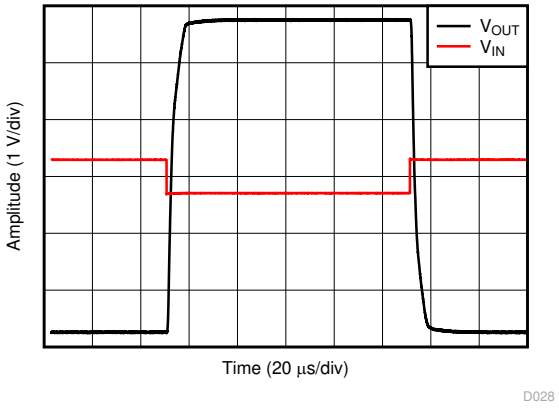

G = –10, V_{IN} = 600 mV_{PP}

図 6-23. Overload Recovery

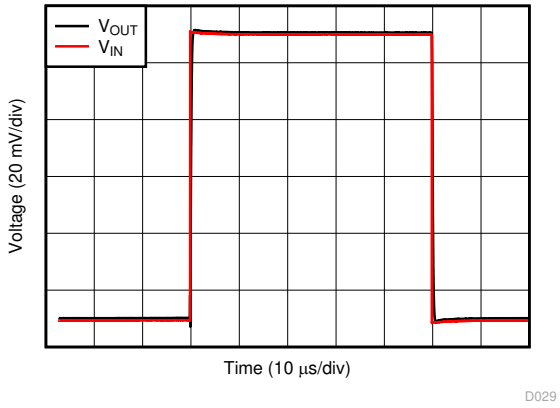

G = 1, V_{IN} = 100 mV_{PP}, C_L = 10 pF

図 6-24. Small-Signal Step Response

6.8 Typical Characteristics (continued)

at T_A = 25°C, V+ = 2.75 V, V– = –2.75 V, R_L = 10 kΩ connected to V_S / 2, V_{CM} = V_S / 2, and V_{OUT} = V_S / 2 (unless otherwise noted)

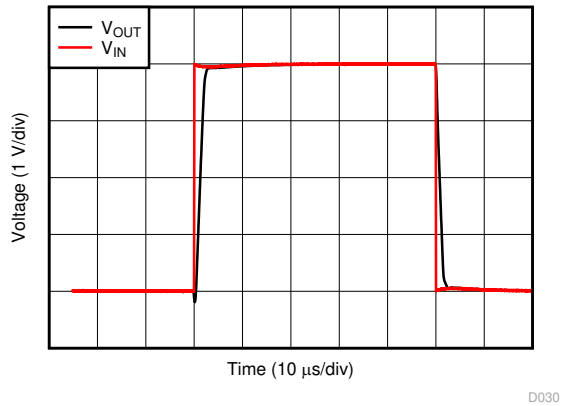

G = 1, V_{IN} = 4 V_{PP}, C_L = 10 pF

図 6-25. Large-Signal Step Response

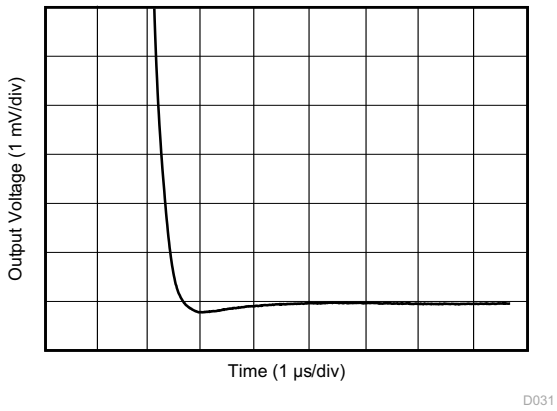

G = 1, C_L = 100 pF, 2-V step

図 6-26. Large-Signal Settling Time (Negative)

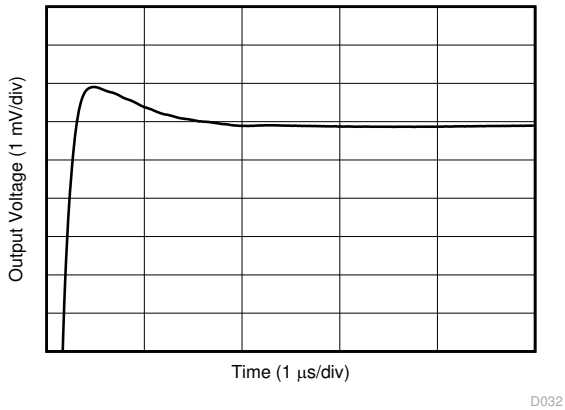

G = 1, C_L = 100 pF, 2-V step

図 6-27. Large-Signal Settling Time (Positive)

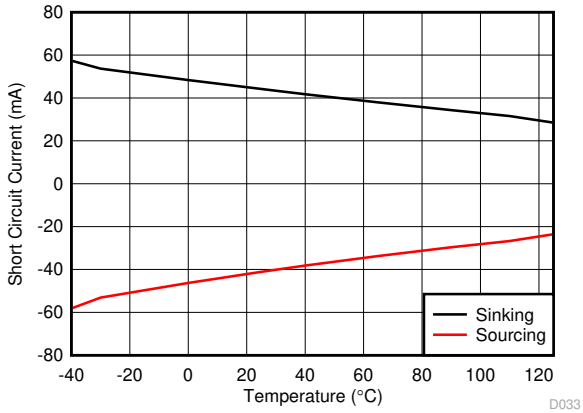

図 6-28. Short-Circuit Current vs Temperature

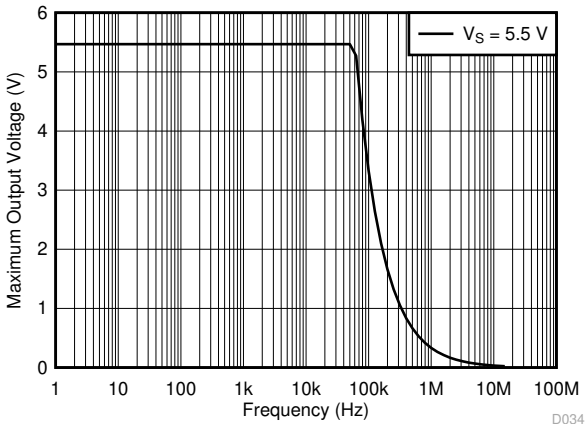

図 6-29. Maximum Output Voltage vs Frequency

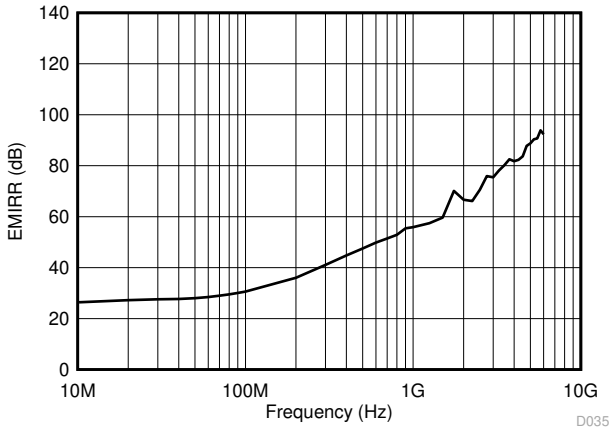

図 6-30. Electromagnetic Interference Rejection Ratio Referred to Non-inverting Input (EMIRR+) vs Frequency

Copyright © 2023 Texas Instruments Incorporated

6.8 Typical Characteristics (continued)

at T_A = 25°C, V+ = 2.75 V, V– = –2.75 V, R_L = 10 kΩ connected to V_S / 2, V_{CM} = V_S / 2, and V_{OUT} = V_S / 2 (unless otherwise noted)

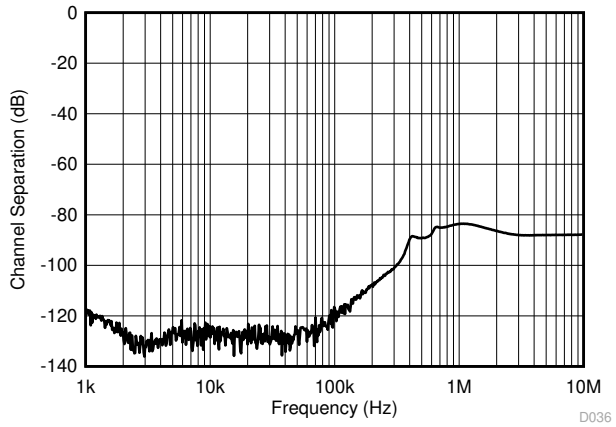

図 6-31. Channel Separation

7 Detailed Description

7.1 Overview

The LMV3xxA-Q1 is a family of low-power, rail-to-rail output op amps. These devices operate from 2.5 V to 5.5 V, are unity-gain stable, and are designed for a wide range of general-purpose applications. The input common-mode voltage range includes the negative rail and allows the LMV3xxA-Q1 family to be used in many single-supply applications. Rail-to-rail output swing significantly increases dynamic range, especially in low-supply applications, and makes the family of devices an excellent choice for driving sampling analog-to-digital converters (ADCs).

7.2 Functional Block Diagram

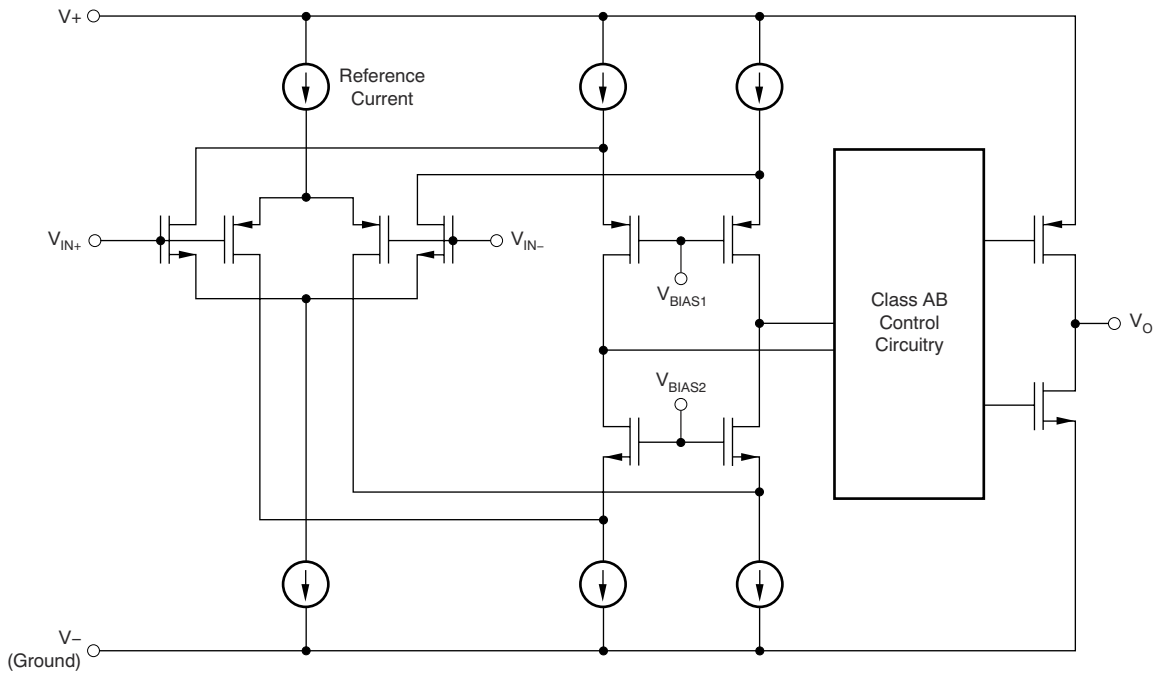

Copyright © 2023 Texas Instruments Incorporated

7.3 Feature Description

7.3.1 Operating Voltage

The LMV3xxA-Q1 family of op amps are for operation from 2.5 V to 5.5 V. In addition, many specifications such as input offset voltage, quiescent current, offset current, and short circuit current apply from –40°C to 125°C. Parameters that vary significantly with operating voltages or temperature are shown in the *Typical Characteristics* section.

7.3.2 Input Common Mode Range

The input common-mode voltage range of the LMV3xxA-Q1 family extends 100 mV beyond the negative supply rail and within 1 V below the positive rail for the full supply voltage range of 2.5 V to 5.5 V. This performance is achieved with a P-channel differential pair, as shown in the *Functional Block Diagram*. Additionally, a complementary N-channel differential pair has been included in parallel to eliminate issues with phase reversal that are common with previous generations of op amps. However, the N-channel pair is not optimized for operation. TI recommends limiting any voltages applied at the inputs to less than V_{CC} – 1 V to make sure that the op amp conforms to the specifications detailed in the *Electrical Characteristics* table.

7.3.3 Rail-to-Rail Output

Designed as a low-power, low-voltage operational amplifier, the LMV3xxA-Q1 family delivers a robust output drive capability. A class-AB output stage with common-source transistors achieves full rail-to-rail output swing capability. For resistive loads of 10 kΩ, the output swings to within 20 mV of either supply rail, regardless of the applied power-supply voltage. Different load conditions change the ability of the amplifier to swing close to the rails.

7.3.4 Overload Recovery

Overload recovery is defined as the time required for the operational amplifier output to recover from a saturated state to a linear state. The output devices of the operational amplifier enter a saturation region when the output voltage exceeds the rated operating voltage, because of the high input voltage or the high gain. After the device enters the saturation region, the charge carriers in the output devices require time to return to the linear state. After the charge carriers return to the linear state, the device begins to slew at the specified slew rate. Therefore, the propagation delay (in case of an overload condition) is the sum of the overload recovery time and the slew time. The overload recovery time for the LMV3xxA-Q1 family is approximately 850 ns.

7.4 Device Functional Modes

The LMV3xxA-Q1 family has a single functional mode. The devices are powered on as long as the power-supply voltage is between 2.5 V (±1.25 V) and 5.5 V (±2.75 V).

Copyright © 2023 Texas Instruments Incorporated

8 Application and Implementation

注

以下のアプリケーション情報は、TI の製品仕様に含まれるものではなく、TI ではその正確性または完全性を保証いたしません。個々の目的に対する製品の適合性については、お客様の責任で判断していただくことになります。お客様は自身の設計実装を検証しテストすることで、システムの機能を確認する必要があります。

8.1 Application Information

The LMV3xxA-Q1 family of low-power, rail-to-rail output operational amplifiers is specifically designed for portable applications. The devices operate from 2.5 V to 5.5 V, are unity-gain stable, and are designed for for a wide range of general-purpose applications. The class AB output stage is capable of driving less than or equal to 10-kΩ loads connected to any point between V+ and V–. The input common-mode voltage range includes the negative rail, and allows the LMV3xxA-Q1 devices to be used in many single-supply applications.

8.2 Typical Application

8.2.1 LMV3xxA-Q1 Low-Side, Current Sensing Application

図 8-1 shows the LMV3xxA-Q1 configured in a low-side current sensing application.

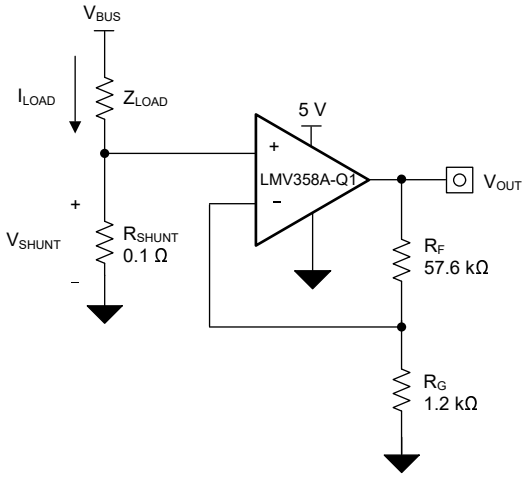

図 8-1. LMV3xxA-Q1 in a Low-Side, Current-Sensing Application

Copyright © 2023 Texas Instruments Incorporated

8.2.1.1 Design Requirements

The design requirements for this design are:

- Load current: 0 A to 1 A
- Output voltage: 4.9 V
- Maximum shunt voltage: 100 mV

8.2.1.2 Detailed Design Procedure

The transfer function of the circuit in 図 8-1 is given in 式 1.

$$V_{OUT} = I_{LOAD} \times R_{SHUNT} \times Gain \tag{1}$$

The load current (I_{LOAD}) produces a voltage drop across the shunt resistor (R_{SHUNT}). The load current is set from 0 A to 1 A. To keep the shunt voltage below 100 mV at maximum load current, the largest shunt resistor is shown using 式 2.

$$R_{SHUNT} = \frac{V_{SHUNT_MAX}}{I_{LOAD_MAX}} = \frac{100\ mV}{1\ A} = 100\ m\Omega \tag{2}$$

Using 式 2, R_{SHUNT} is calculated to be 100 mΩ. The voltage drop produced by I_{LOAD} and R_{SHUNT} is amplified by the LMV3xxA-Q1 to produce an output voltage of approximately 0 V to 4.9 V. The gain needed by the LMV3xxA-Q1 to produce the necessary output voltage is calculated using 式 3.

$$Gain = \frac{(V_{OUT_MAX} - V_{OUT_MIN})}{(V_{IN_MAX} - V_{IN_MIN})} \tag{3}$$

Using 式 3, the required gain is calculated to be 49 V/V, which is set with resistors R_F and R_G. 式 4 sizes the resistors R_F and R_G, to set the gain of the LMV3xxA-Q1 to 49 V/V.

$$Gain = 1 + \frac{(R_F)}{(R_G)} \tag{4}$$

Selecting R_F as 57.6 kΩ and R_G as 1.2 kΩ provides a combination that equals 49 V/V. 図 8-2 shows the measured transfer function of the circuit shown in 図 8-1. Notice that the gain is only a function of the feedback and gain resistors. This gain is adjusted by varying the ratio of the resistors and the actual resistors values are determined by the impedance levels that the designer wants to establish. The impedance level determines the current drain, the effect that stray capacitance has, and a few other behaviors. There is no best impedance selection that works for every system, choose an impedance that is an excellent choice for the system parameters.

8.2.1.3 Application Curve

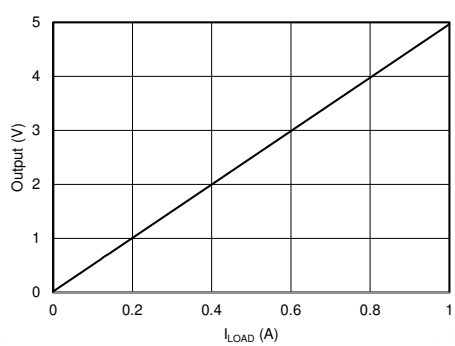

図 8-2. Low-Side, Current-Sense Transfer Function

8.2.2 Single-Supply Photodiode Amplifier

Photodiodes are used in many applications to convert light signals to electrical signals. The current through the photodiode is proportional to the photon energy absorbed, and is commonly in the range of a few hundred picoamps to a few tens of microamps. An amplifier in a transimpedance configuration is typically used to convert the low-level photodiode current to a voltage signal for processing in an MCU. The circuit shown in 図 8-3 is an example of a single-supply photodiode amplifier circuit using the LMV358A-Q1.

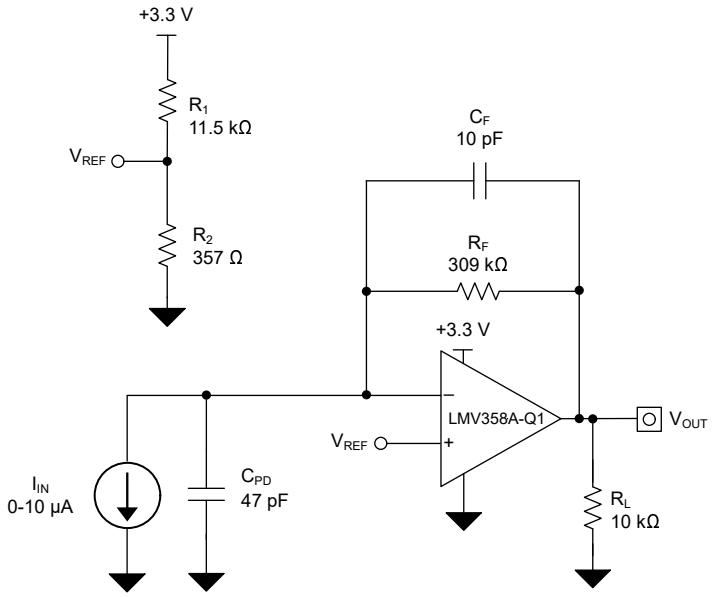

図 8-3. Single-Supply Photodiode Amplifier Circuit

Copyright © 2023 Texas Instruments Incorporated

8.2.2.1 Design Requirements

The design requirements for this design are:

- Supply voltage: 3.3 V
- Input: 0 µA to 10 µA
- Output: 0.1 V to 3.2 V
- Bandwidth: 50 kHz

8.2.2.2 Detailed Design Procedure

The transfer function between the output voltage (V_{OUT}), the input current, (I_{IN}) and the reference voltage (V_{REF}) is defined in 式 5.

$$V_{OUT} = I_{IN} + R_F + V_{REF} \tag{5}$$

Where:

$$V_{REF} = V_+ \times \left(\frac{R_1 \times R_2}{R_1 + R_2}\right) \tag{6}$$

Set V_{REF} to 100 mV to meet the minimum output voltage level by setting R1 and R2 to meet the required ratio calculated in 式 7.

$$\frac{V_{REF}}{V_+} = \frac{0.1\,V}{3.3\,V} = 0.0303 \tag{7}$$

The closest resistor ratio to meet this ratio sets R1 to 11.5 kΩ and R2 to 357 Ω.

The required feedback resistance can be calculated based on the input current and desired output voltage.

$$R_F = \frac{V_{OUT} - V_{REF}}{I_{IN}} = \frac{3.2\,V - 0.1\,V}{10\,\mu A} = 310\,\frac{kV}{A} \approx 309\,k\Omega \tag{8}$$

Calculate the value for the feedback capacitor based on R_F and the desired –3-dB bandwidth, (f_{-3dB}) using 式 9.

$$C_F = \frac{1}{2 \times \pi \times R_F \times f_{-3\,dB}} = \frac{1}{2 \times \pi \times 309\,k\Omega \times 50\,kHz} = 10.3\,pF \approx 10\,pF \tag{9}$$

The minimum op amp bandwidth required for this application is based on the value of R_F, C_F, and the capacitance on the INx– pin of the LMV358A-Q1 which is equal to the sum of the photodiode shunt capacitance, (CPD) the common-mode input capacitance, (CCM) and the differential input capacitance (CD) as 式 10 shows.

$$C_{IN} = C_{PD} + C_{CM} + C_D = 47\,pF + 5\,pf + 1\,pF = 53\,pF \tag{10}$$

The minimum op amp bandwidth is calculated in 式 11.

$$F = BGW \geq \frac{C_{IN} + C_F}{2 \times \pi \times R_F \times C_F{}^2} \geq 324\,kHz \tag{11}$$

The 1-MHz bandwidth of the LMV3xxA-Q1 meets the minimum bandwidth requirement and remains stable in this application configuration.

8.2.2.3 Application Curves

The measured current-to-voltage transfer function for the photodiode amplifier circuit is shown in 図 8-4. The measured performance of the photodiode amplifier circuit is shown in 図 8-5.

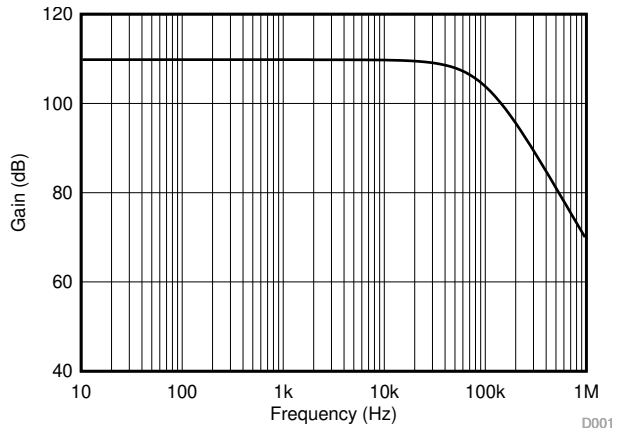

図 8-4. Photodiode Amplifier Circuit AC Gain Results

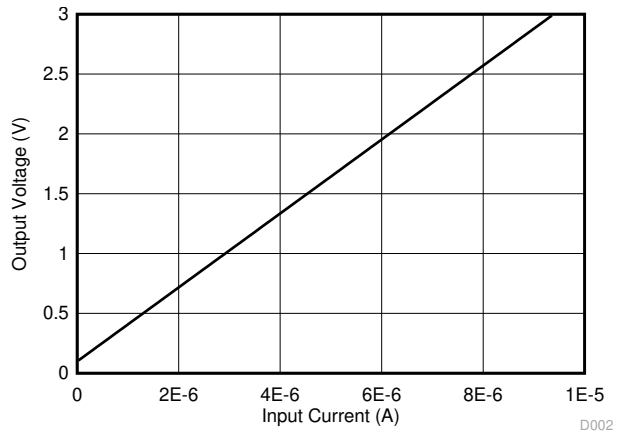

図 8-5. Photodiode Amplifier Circuit DC Results

Copyright © 2023 Texas Instruments Incorporated

9 Power Supply Recommendations

The LMV3xxA-Q1 family is specified for operation from 2.5 V to 5.5 V (±1.25 V to ±2.75 V); many specifications apply from –40°C to 125°C. The *Typical Characteristics* section presents parameters that may exhibit significant variance with regard to operating voltage or temperature.

> **注意**
>
> Supply voltages larger than 6 V may permanently damage the device; see the *Absolute Maximum Ratings* table.

Place 0.1-µF bypass capacitors close to the power-supply pins to reduce coupling errors from noisy or high-impedance power supplies. For more detailed information on bypass capacitor placement, see the *Layout Guidelines* section.

9.1 Input and ESD Protection

The LMV3xxA-Q1 family incorporates internal ESD protection circuits on all pins. For input and output pins, this protection primarily consists of current-steering diodes connected between the input and power-supply pins. These ESD protection diodes provide in-circuit, input overdrive protection, as long as the current is limited to 10 mA. 図 9-1 shows how a series input resistor can be added to the driven input to limit the input current. The added resistor contributes thermal noise at the amplifier input and the value must be kept to a minimum in noise-sensitive applications.

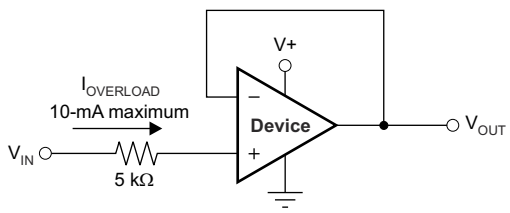

図 9-1. Input Current Protection

10 Layout

10.1 Layout Guidelines

For best operational performance of the device, use good printed circuit board (PCB) layout practices, including:

- Noise can propagate into analog circuitry through the power connections of the board and propagate to the power pins of the op amp itself. Bypass capacitors are used to reduce the coupled noise by providing a low-impedance path to ground.
  - Connect low-ESR, 0.1-µF ceramic bypass capacitors between each supply pin and ground, placed as close to the device as possible. A single bypass capacitor from V+ to ground is adequate for single-supply applications.
- Separate grounding for analog and digital portions of circuitry is one of the simplest and most effective methods of noise suppression. One or more layers on multilayer PCBs are usually devoted to ground planes. A ground plane helps distribute heat and reduces electromagnetic interference (EMI) noise pickup. Take care to physically separate digital and analog grounds, paying attention to the flow of the ground current.
- To reduce parasitic coupling, run the input traces as far away from the supply or output traces as possible. If these traces cannot be kept separate, crossing the sensitive trace at a 90 degree angle is much better as opposed to running the traces in parallel with the noisy trace.
- Place the external components as close to the device as possible, as shown in 図 10-2. Keeping R_F and R_G close to the inverting input minimizes parasitic capacitance.
- Keep the length of input traces as short as possible. Remember that the input traces are the most sensitive part of the circuit.
- Consider a driven, low-impedance guard ring around the critical traces. A guard ring may significantly reduce leakage currents from nearby traces that are at different potentials.
- Cleaning the PCB following board assembly is recommended for best performance.
- Any precision integrated circuit can experience performance shifts resulting from moisture ingress into the plastic package. Following any aqueous PCB cleaning process, baking the PCB assembly is recommended to remove moisture introduced into the device packaging during the cleaning process. A low-temperature, post-cleaning bake at 85°C for 30 minutes is sufficient for most circumstances.

10.2 Layout Example

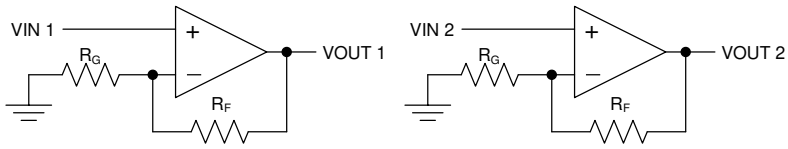

図 10-1. Schematic Representation for Figure 10-2

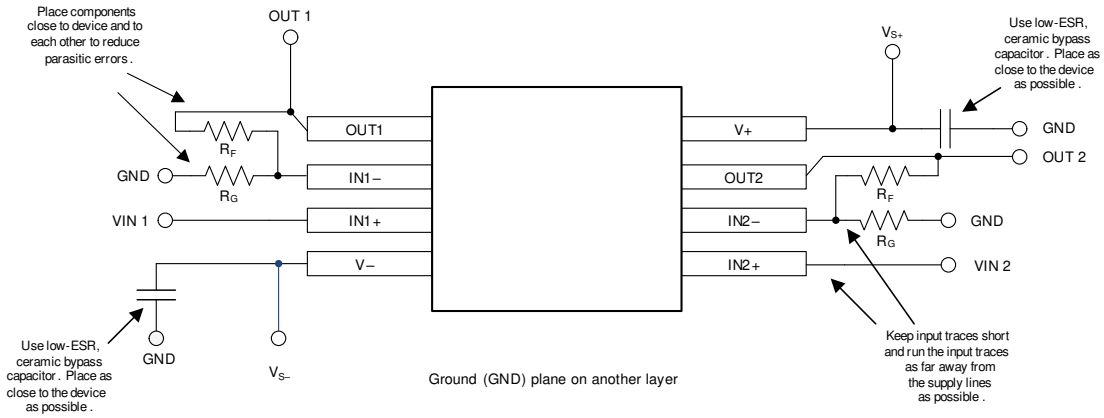

図 10-2. Layout Example

Copyright © 2023 Texas Instruments Incorporated

11 Device and Documentation Support

11.1 Documentation Support

11.1.1 Related Documentation

For related documentation, see the following:

- Texas Instruments, *EMI Rejection Ratio of Operational Amplifiers*

11.2 Receiving Notification of Documentation Updates

To receive notification of documentation updates, navigate to the device product folder on ti.com. In the upper right corner, click on *Alert me* to register and receive a weekly digest of any product information that has changed. For change details, review the revision history included in any revised document.

11.3 サポート・リソース

TI E2E™ サポート・フォーラムは、エンジニアが検証済みの回答と設計に関するヒントをエキスパートから迅速かつ直接得ることができる場所です。既存の回答を検索したり、独自の質問をしたりすることで、設計で必要な支援を迅速に得ることができます。

リンクされているコンテンツは、該当する貢献者により、現状のまま提供されるものです。これらは TI の仕様を構成するものではなく、必ずしも TI の見解を反映したものではありません。TI の使用条件を参照してください。

11.4 Trademarks

TI E2E™ is a trademark of Texas Instruments.
すべての商標は、それぞれの所有者に帰属します。

11.5 静電気放電に関する注意事項

この IC は、ESD によって破損する可能性があります。テキサス・インスツルメンツは、IC を取り扱う際には常に適切な注意を払うことを推奨します。正しい取り扱いおよび設置手順に従わない場合、デバイスを破損するおそれがあります。

ESD による破損は、わずかな性能低下からデバイスの完全な故障まで多岐にわたります。精密な IC の場合、パラメータがわずかに変化するだけで公表されている仕様から外れる可能性があるため、破損が発生しやすくなっています。

11.6 用語集

テキサス・インスツルメンツ用語集　　この用語集には、用語や略語の一覧および定義が記載されています。

12 Mechanical, Packaging, and Orderable Information

The following pages include mechanical, packaging, and orderable information. This information is the most-current data available for the designated devices. This data is subject to change without notice and without revision of this document. For browser-based versions of this data sheet, see the left-hand navigation pane.

PACKAGING INFORMATION

Orderable part number	Status (1)	Material type (2)	Package | Pins	Package qty | Carrier	RoHS (3)	Lead finish/ Ball material (4)	MSL rating/ Peak reflow (5)	Op temp (°C)	Part marking (6)
LMV321AQDBVRQ1	Active	Production	SOT-23 (DBV) | 5	3000 | LARGE T&R	Yes	SN	Level-1-260C-UNLIM	-40 to 125	2S3F
LMV321AQDBVRQ1.A	Active	Production	SOT-23 (DBV) | 5	3000 | LARGE T&R	Yes	SN	Level-1-260C-UNLIM	-40 to 125	2S3F
LMV321AQDCKRQ1	Active	Production	SC70 (DCK) | 5	3000 | LARGE T&R	Yes	NIPDAU	Level-1-260C-UNLIM	-40 to 125	1N1
LMV321AQDCKRQ1.A	Active	Production	SC70 (DCK) | 5	3000 | LARGE T&R	Yes	NIPDAU	Level-1-260C-UNLIM	-40 to 125	1N1
LMV321AUQDBVRQ1	Active	Production	SOT-23 (DBV) | 5	3000 | LARGE T&R	Yes	SN	Level-1-260C-UNLIM	-40 to 125	2T7H
LMV321AUQDBVRQ1.A	Active	Production	SOT-23 (DBV) | 5	3000 | LARGE T&R	Yes	SN	Level-1-260C-UNLIM	-40 to 125	2T7H
LMV324AQDRQ1	Active	Production	SOIC (D) | 14	2500 | LARGE T&R	Yes	NIPDAU	Level-2-260C-1 YEAR	-40 to 125	LM324Q
LMV324AQDRQ1.A	Active	Production	SOIC (D) | 14	2500 | LARGE T&R	Yes	NIPDAU	Level-2-260C-1 YEAR	-40 to 125	LM324Q
LMV324AQDYYRQ1	Active	Production	SOT-23-THIN (DYY) | 14	3000 | LARGE T&R	Yes	NIPDAU	Level-1-260C-UNLIM	-40 to 125	LM324Q
LMV324AQDYYRQ1.A	Active	Production	SOT-23-THIN (DYY) | 14	3000 | LARGE T&R	Yes	NIPDAU	Level-1-260C-UNLIM	-40 to 125	LM324Q
LMV324AQPWRQ1	Active	Production	TSSOP (PW) | 14	3000 | LARGE T&R	Yes	NIPDAU | SN	Level-1-260C-UNLIM	-40 to 125	LM324A
LMV324AQPWRQ1.A	Active	Production	TSSOP (PW) | 14	3000 | LARGE T&R	Yes	NIPDAU	Level-1-260C-UNLIM	-40 to 125	LM324A
LMV358AQDGKRQ1	Active	Production	VSSOP (DGK) | 8	2500 | LARGE T&R	Yes	NIPDAU	Level-1-260C-UNLIM	-40 to 125	27FT
LMV358AQDGKRQ1.A	Active	Production	VSSOP (DGK) | 8	2500 | LARGE T&R	Yes	NIPDAU	Level-1-260C-UNLIM	-40 to 125	27FT
LMV358AQDRQ1	Active	Production	SOIC (D) | 8	2500 | LARGE T&R	Yes	NIPDAU	Level-1-260C-UNLIM	-40 to 125	L358AQ
LMV358AQDRQ1.A	Active	Production	SOIC (D) | 8	2500 | LARGE T&R	Yes	NIPDAU	Level-1-260C-UNLIM	-40 to 125	L358AQ

(1) **Status:** For more details on status, see our product life cycle.

(2) **Material type:** When designated, preproduction parts are prototypes/experimental devices, and are not yet approved or released for full production. Testing and final process, including without limitation quality assurance, reliability performance testing, and/or process qualification, may not yet be complete, and this item is subject to further changes or possible discontinuation. If available for ordering, purchases will be subject to an additional waiver at checkout, and are intended for early internal evaluation purposes only. These items are sold without warranties of any kind.

(3) **RoHS values:** Yes, No, RoHS Exempt. See the TI RoHS Statement for additional information and value definition.

(4) **Lead finish/Ball material:** Parts may have multiple material finish options. Finish options are separated by a vertical ruled line. Lead finish/Ball material values may wrap to two lines if the finish value exceeds the maximum column width.

(5) **MSL rating/Peak reflow:** The moisture sensitivity level ratings and peak solder (reflow) temperatures. In the event that a part has multiple moisture sensitivity ratings, only the lowest level per JEDEC standards is shown. Refer to the shipping label for the actual reflow temperature that will be used to mount the part to the printed circuit board.

(6) **Part marking:** There may be an additional marking, which relates to the logo, the lot trace code information, or the environmental category of the part.

Multiple part markings will be inside parentheses. Only one part marking contained in parentheses and separated by a "~" will appear on a part. If a line is indented then it is a continuation of the previous line and the two combined represent the entire part marking for that device.

Important Information and Disclaimer: The information provided on this page represents TI's knowledge and belief as of the date that it is provided. TI bases its knowledge and belief on information provided by third parties, and makes no representation or warranty as to the accuracy of such information. Efforts are underway to better integrate information from third parties. TI has taken and continues to take reasonable steps to provide representative and accurate information but may not have conducted destructive testing or chemical analysis on incoming materials and chemicals. TI and TI suppliers consider certain information to be proprietary, and thus CAS numbers and other limited information may not be available for release.

In no event shall TI's liability arising out of such information exceed the total purchase price of the TI part(s) at issue in this document sold by TI to Customer on an annual basis.

OTHER QUALIFIED VERSIONS OF LMV321A-Q1, LMV324A-Q1, LMV358A-Q1 :

- Catalog : LMV321A, LMV324A, LMV358A

NOTE: Qualified Version Definitions:

- Catalog - TI's standard catalog product

TAPE AND REEL INFORMATION

REEL DIMENSIONS

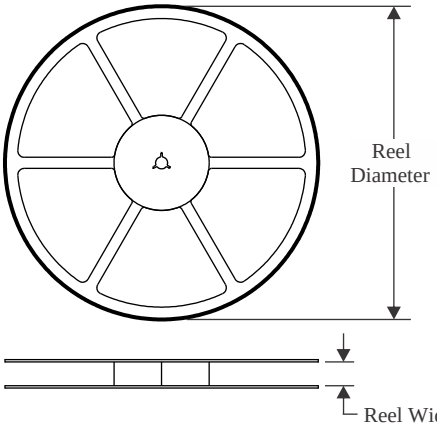

TAPE DIMENSIONS

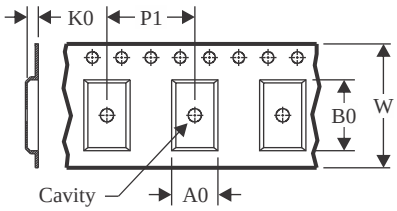

A0	Dimension designed to accommodate the component width
B0	Dimension designed to accommodate the component length
K0	Dimension designed to accommodate the component thickness
W	Overall width of the carrier tape
P1	Pitch between successive cavity centers

QUADRANT ASSIGNMENTS FOR PIN 1 ORIENTATION IN TAPE

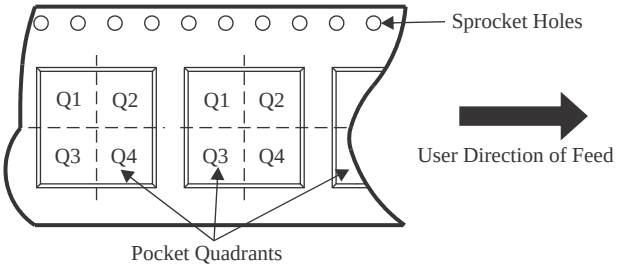

*All dimensions are nominal

Device	Package Type	Package Drawing	Pins	SPQ	Reel Diameter (mm)	Reel Width W1 (mm)	A0 (mm)	B0 (mm)	K0 (mm)	P1 (mm)	W (mm)	Pin1 Quadrant
LMV321AQDBVRQ1	SOT-23	DBV	5	3000	180.0	8.4	3.2	3.2	1.4	4.0	8.0	Q3
LMV321AQDBVRQ1	SOT-23	DBV	5	3000	180.0	8.4	3.2	3.2	1.4	4.0	8.0	Q3
LMV321AQDCKRQ1	SC70	DCK	5	3000	178.0	9.0	2.4	2.5	1.2	4.0	8.0	Q3
LMV321AUQDBVRQ1	SOT-23	DBV	5	3000	180.0	8.4	3.2	3.2	1.4	4.0	8.0	Q3
LMV321AUQDBVRQ1	SOT-23	DBV	5	3000	180.0	8.4	3.2	3.2	1.4	4.0	8.0	Q3
LMV324AQDRQ1	SOIC	D	14	2500	330.0	16.4	6.5	9.0	2.1	8.0	16.0	Q1
LMV324AQDYYRQ1	SOT-23-THIN	DYY	14	3000	330.0	12.4	4.8	3.6	1.6	8.0	12.0	Q3
LMV324AQPWRQ1	TSSOP	PW	14	3000	330.0	12.4	6.9	5.6	1.6	8.0	12.0	Q1
LMV358AQDGKRQ1	VSSOP	DGK	8	2500	330.0	12.4	5.3	3.4	1.4	8.0	12.0	Q1
LMV358AQDGKRQ1	VSSOP	DGK	8	2500	330.0	12.4	5.25	3.35	1.25	8.0	12.0	Q1
LMV358AQDRQ1	SOIC	D	8	2500	330.0	12.4	6.4	5.2	2.1	8.0	12.0	Q1

TAPE AND REEL BOX DIMENSIONS

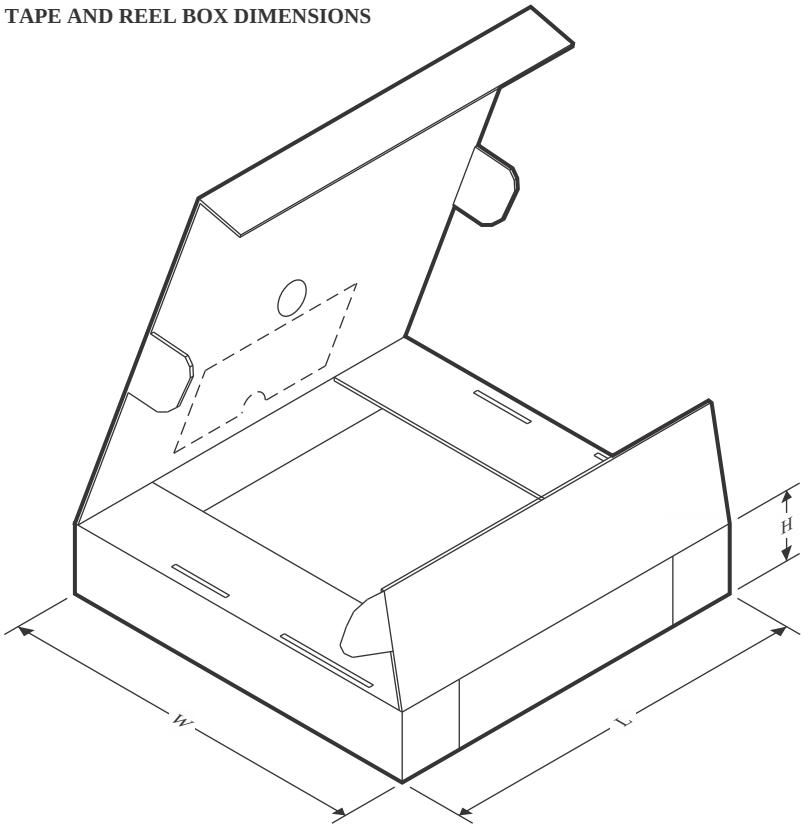

*All dimensions are nominal

Device	Package Type	Package Drawing	Pins	SPQ	Length (mm)	Width (mm)	Height (mm)
LMV321AQDBVRQ1	SOT-23	DBV	5	3000	210.0	185.0	35.0
LMV321AQDBVRQ1	SOT-23	DBV	5	3000	210.0	185.0	35.0
LMV321AQDCKRQ1	SC70	DCK	5	3000	190.0	190.0	30.0
LMV321AUQDBVRQ1	SOT-23	DBV	5	3000	210.0	185.0	35.0
LMV321AUQDBVRQ1	SOT-23	DBV	5	3000	210.0	185.0	35.0
LMV324AQDRQ1	SOIC	D	14	2500	353.0	353.0	32.0
LMV324AQDYYRQ1	SOT-23-THIN	DYY	14	3000	336.6	336.6	31.8
LMV324AQPWRQ1	TSSOP	PW	14	3000	353.0	353.0	32.0
LMV358AQDGKRQ1	VSSOP	DGK	8	2500	353.0	353.0	32.0
LMV358AQDGKRQ1	VSSOP	DGK	8	2500	366.0	364.0	50.0
LMV358AQDRQ1	SOIC	D	8	2500	353.0	353.0	32.0

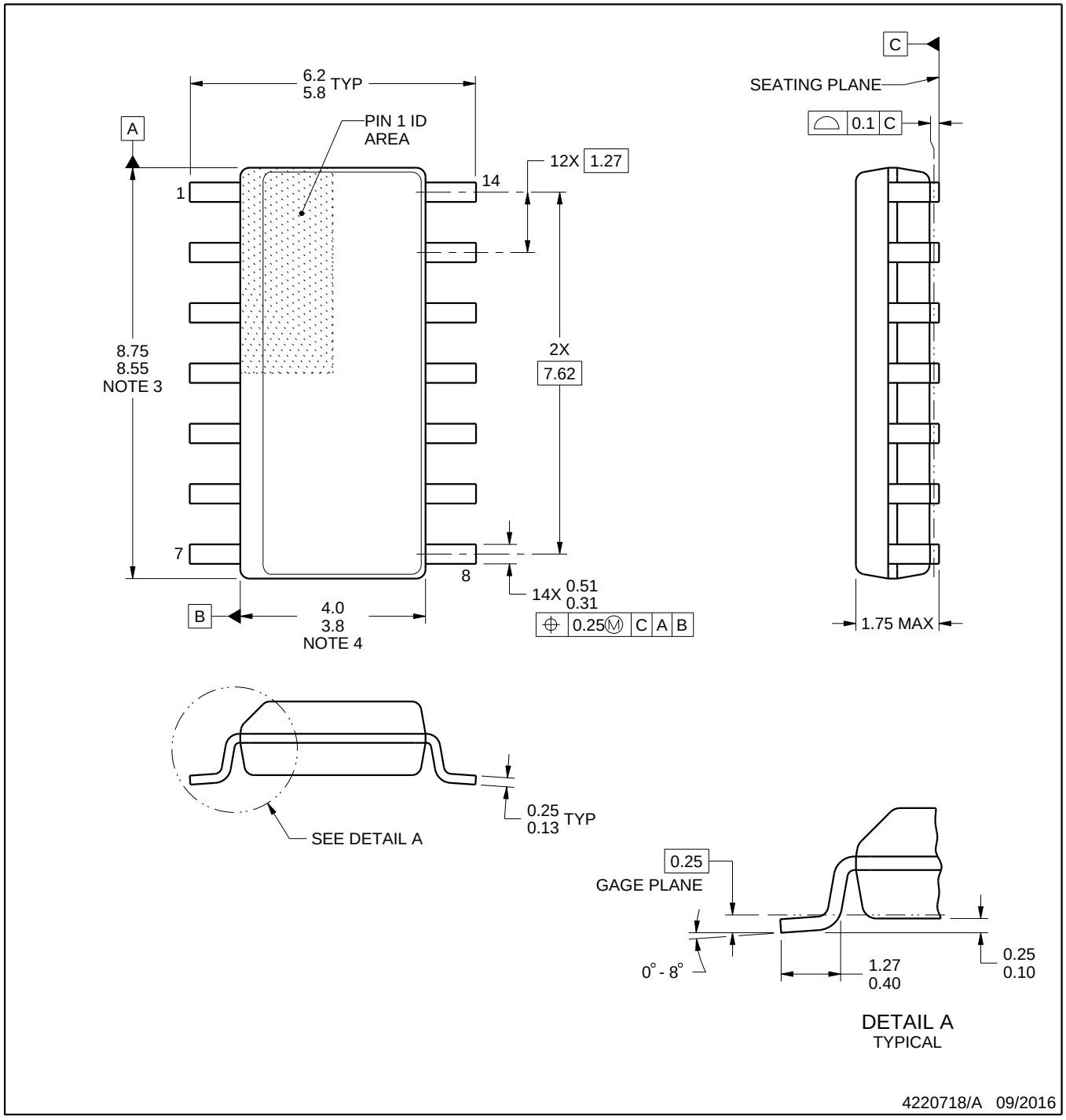

NOTES:

1. All linear dimensions are in millimeters. Dimensions in parenthesis are for reference only. Dimensioning and tolerancing per ASME Y14.5M.
2. This drawing is subject to change without notice.
3. This dimension does not include mold flash, protrusions, or gate burrs. Mold flash, protrusions, or gate burrs shall not exceed 0.15 mm, per side.
4. This dimension does not include interlead flash. Interlead flash shall not exceed 0.43 mm, per side.
5. Reference JEDEC registration MS-012, variation AB.

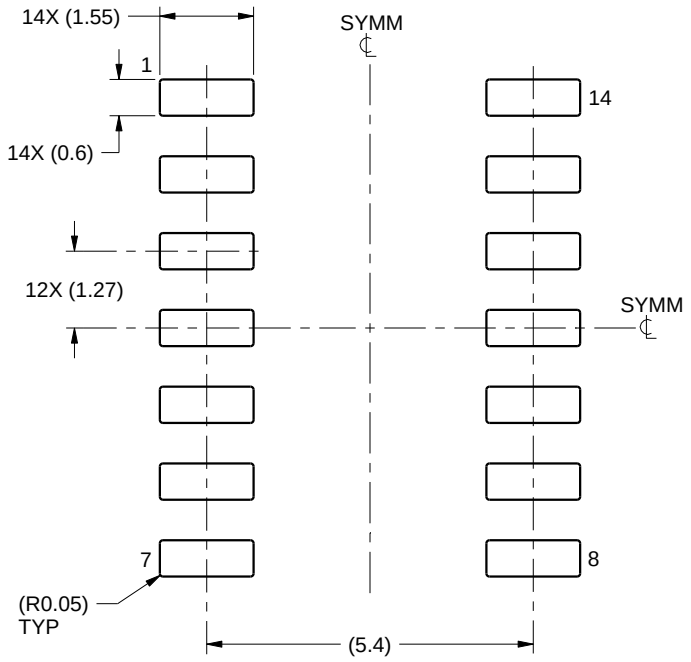

LAND PATTERN EXAMPLE
SCALE:8X

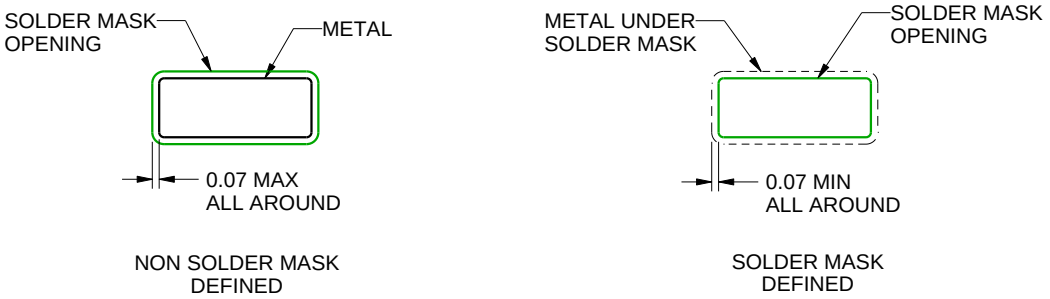

SOLDER MASK DETAILS

4220718/A 09/2016

NOTES: (continued)

6. Publication IPC-7351 may have alternate designs.
7. Solder mask tolerances between and around signal pads can vary based on board fabrication site.

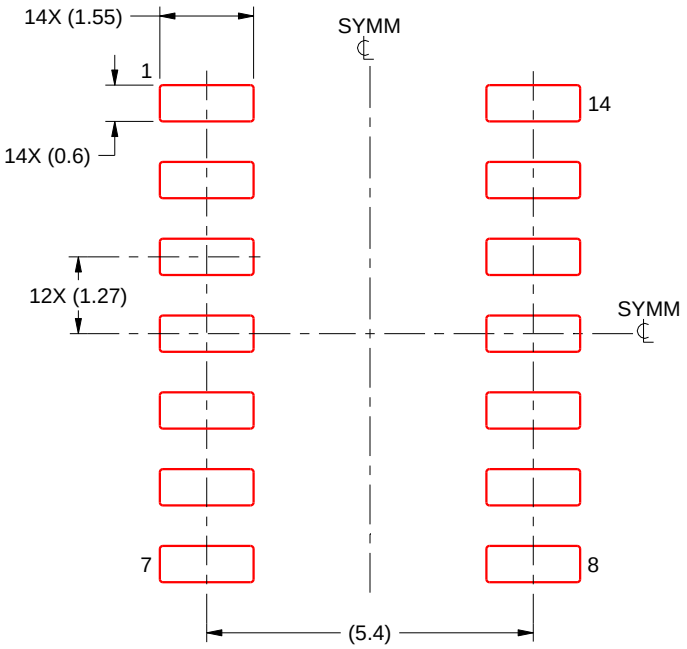

SOLDER PASTE EXAMPLE
BASED ON 0.125 mm THICK STENCIL
SCALE:8X

4220718/A 09/2016

NOTES: (continued)

8. Laser cutting apertures with trapezoidal walls and rounded corners may offer better paste release. IPC-7525 may have alternate design recommendations.
9. Board assembly site may have different recommendations for stencil design.

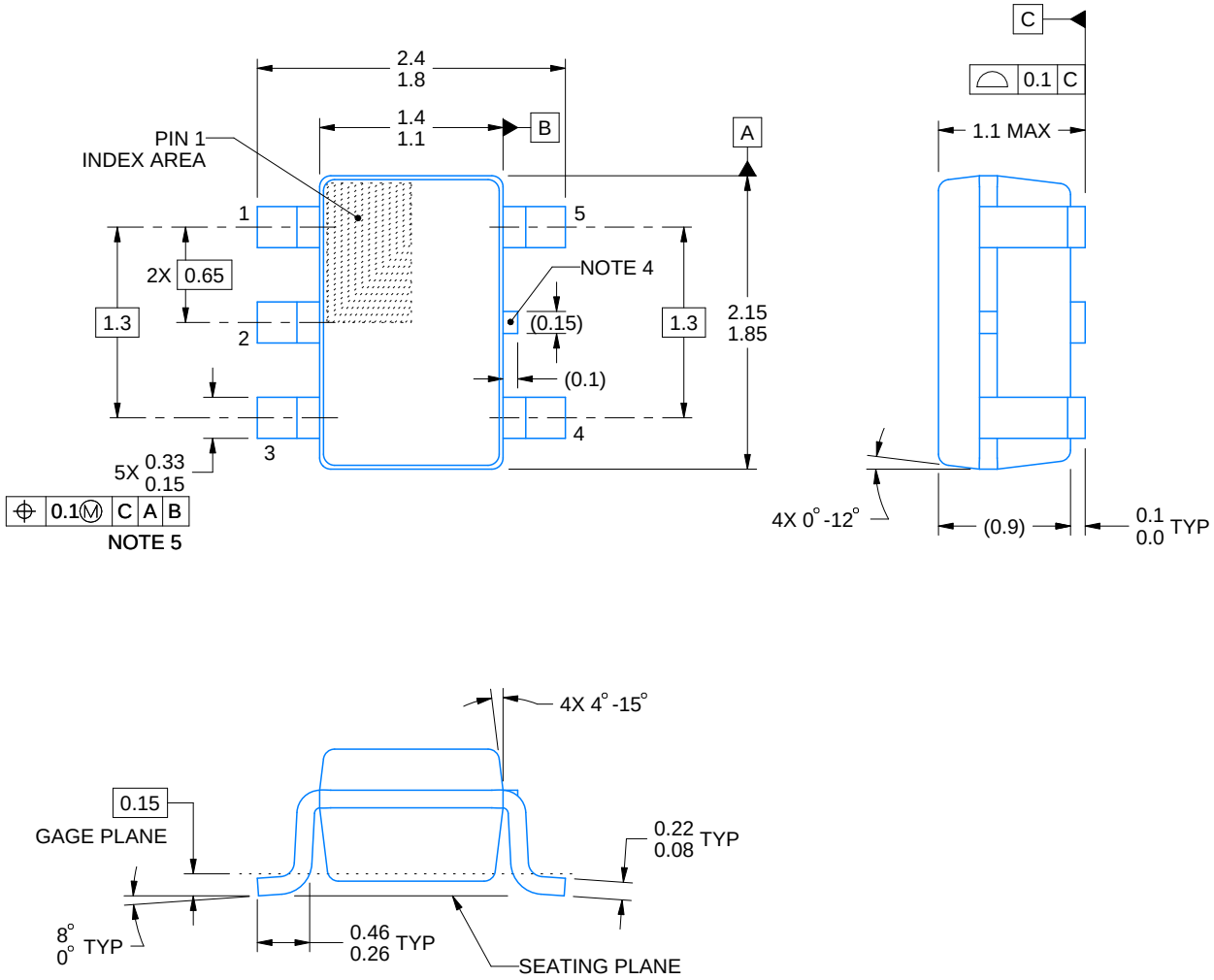

NOTES:

1. All linear dimensions are in millimeters. Any dimensions in parenthesis are for reference only. Dimensioning and tolerancing per ASME Y14.5M.
2. This drawing is subject to change without notice.
3. Refernce JEDEC MO-203.
4. Support pin may differ or may not be present.
5. Lead width does not comply with JEDEC.
6. Body dimensions do not include mold flash, protrusions, or gate burrs. Mold flash, protrusions, or gate burrs shall not exceed 0.25mm per side

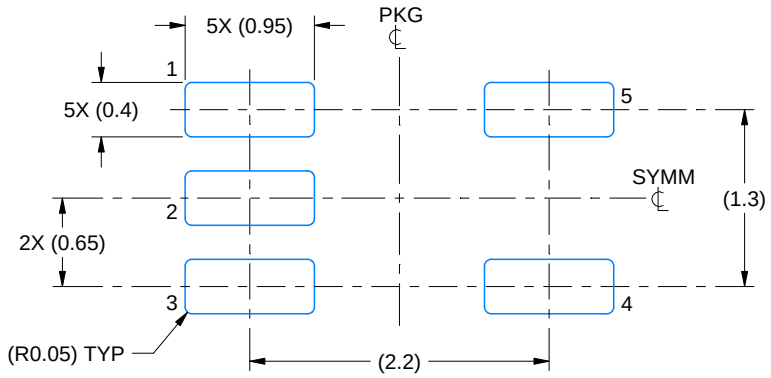

LAND PATTERN EXAMPLE
EXPOSED METAL SHOWN
SCALE:18X

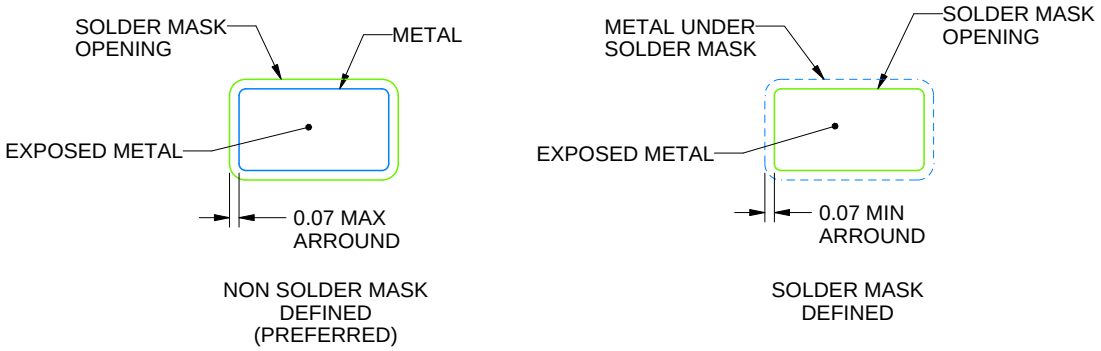

SOLDER MASK DETAILS

4214834/G 11/2024

NOTES: (continued)

7. Publication IPC-7351 may have alternate designs.
8. Solder mask tolerances between and around signal pads can vary based on board fabrication site.

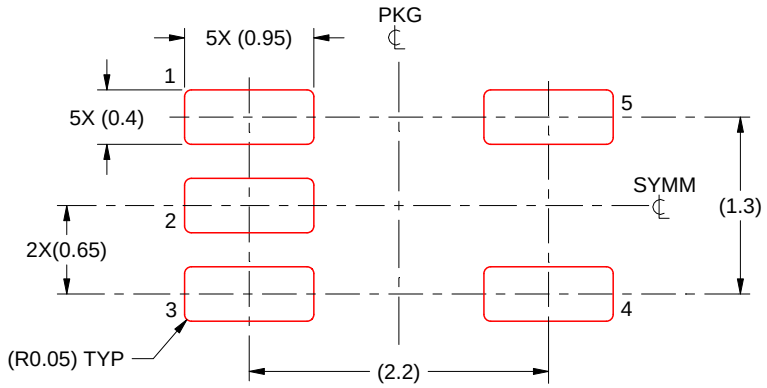

SOLDER PASTE EXAMPLE
BASED ON 0.125 THICK STENCIL
SCALE:18X

4214834/G 11/2024

NOTES: (continued)

9. Laser cutting apertures with trapezoidal walls and rounded corners may offer better paste release. IPC-7525 may have alternate design recommendations.
10. Board assembly site may have different recommendations for stencil design.

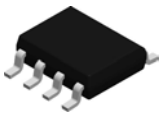

PACKAGE OUTLINE

D0008A

SOIC - 1.75 mm max height

SMALL OUTLINE INTEGRATED CIRCUIT

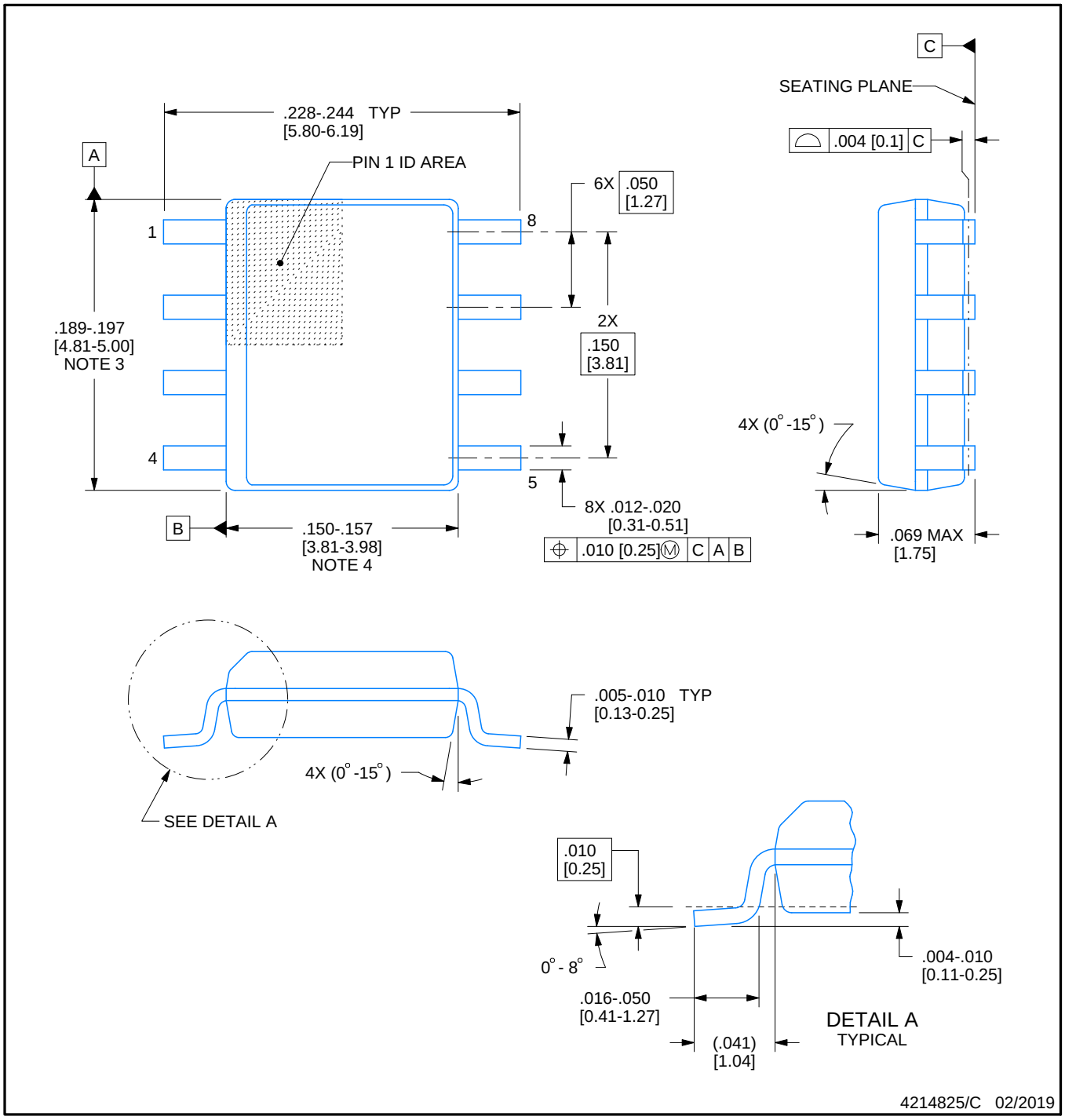

NOTES:

1. Linear dimensions are in inches [millimeters]. Dimensions in parenthesis are for reference only. Controlling dimensions are in inches. Dimensioning and tolerancing per ASME Y14.5M.
2. This drawing is subject to change without notice.
3. This dimension does not include mold flash, protrusions, or gate burrs. Mold flash, protrusions, or gate burrs shall not exceed .006 [0.15] per side.
4. This dimension does not include interlead flash.
5. Reference JEDEC registration MS-012, variation AA.

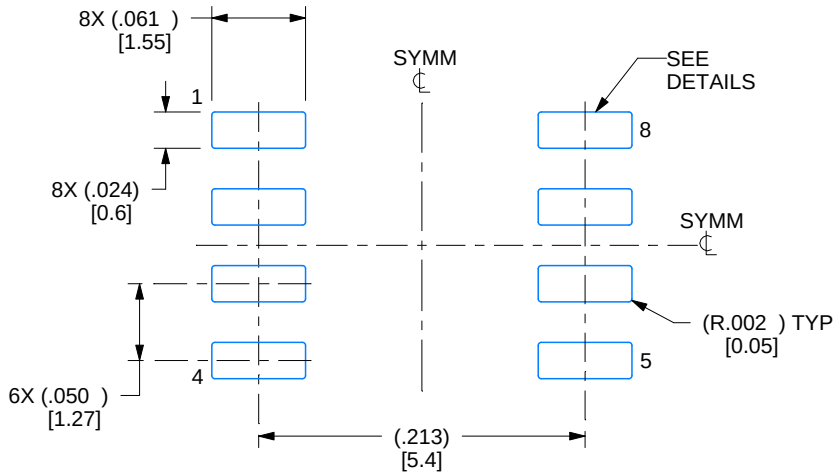

LAND PATTERN EXAMPLE
EXPOSED METAL SHOWN
SCALE:8X

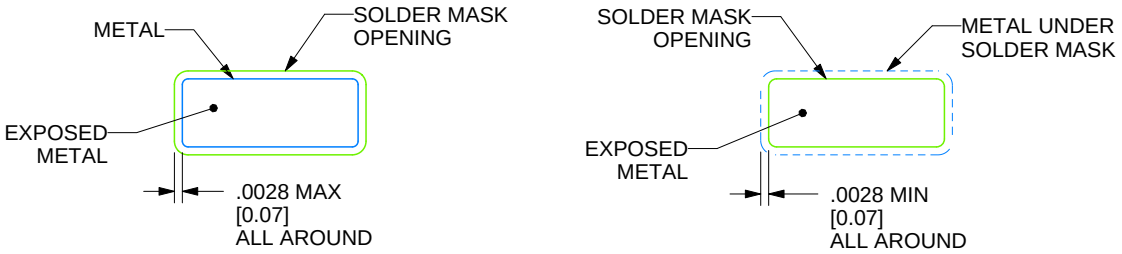

SOLDER MASK DETAILS

4214825/C 02/2019

NOTES: (continued)

6. Publication IPC-7351 may have alternate designs.
7. Solder mask tolerances between and around signal pads can vary based on board fabrication site.

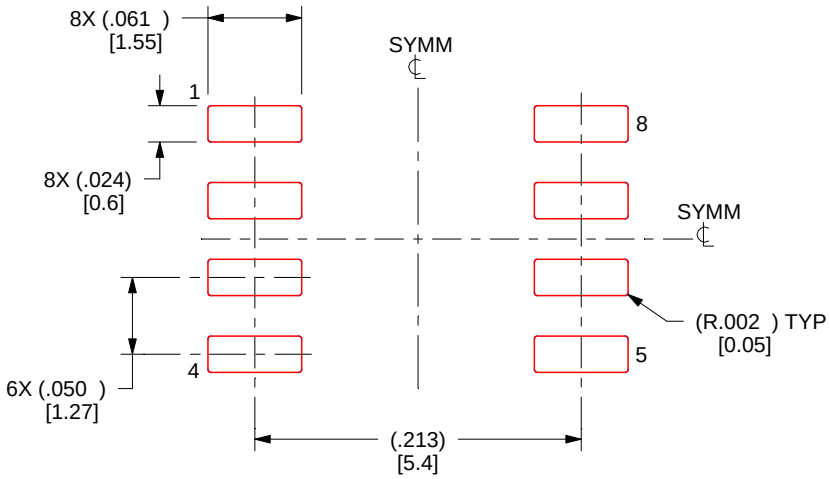

SOLDER PASTE EXAMPLE
BASED ON .005 INCH [0.125 MM] THICK STENCIL
SCALE:8X

4214825/C 02/2019

NOTES: (continued)

8. Laser cutting apertures with trapezoidal walls and rounded corners may offer better paste release. IPC-7525 may have alternate design recommendations.
9. Board assembly site may have different recommendations for stencil design.

PW0014A

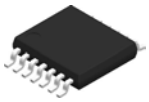

PACKAGE OUTLINE

TSSOP - 1.2 mm max height

SMALL OUTLINE PACKAGE

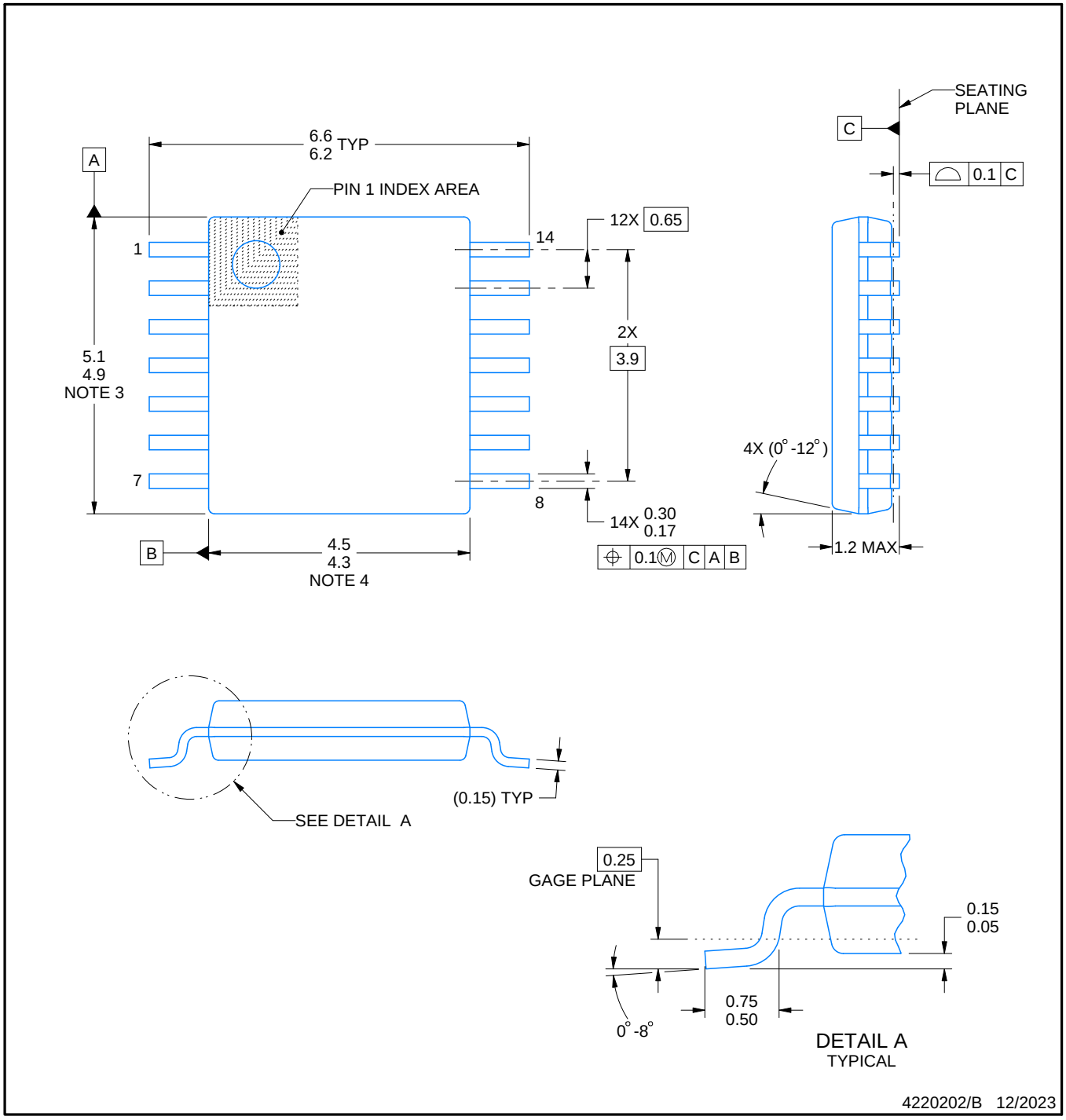

NOTES:

1. All linear dimensions are in millimeters. Any dimensions in parenthesis are for reference only. Dimensioning and tolerancing per ASME Y14.5M.
2. This drawing is subject to change without notice.
3. This dimension does not include mold flash, protrusions, or gate burrs. Mold flash, protrusions, or gate burrs shall not exceed 0.15 mm per side.
4. This dimension does not include interlead flash. Interlead flash shall not exceed 0.25 mm per side.
5. Reference JEDEC registration MO-153.

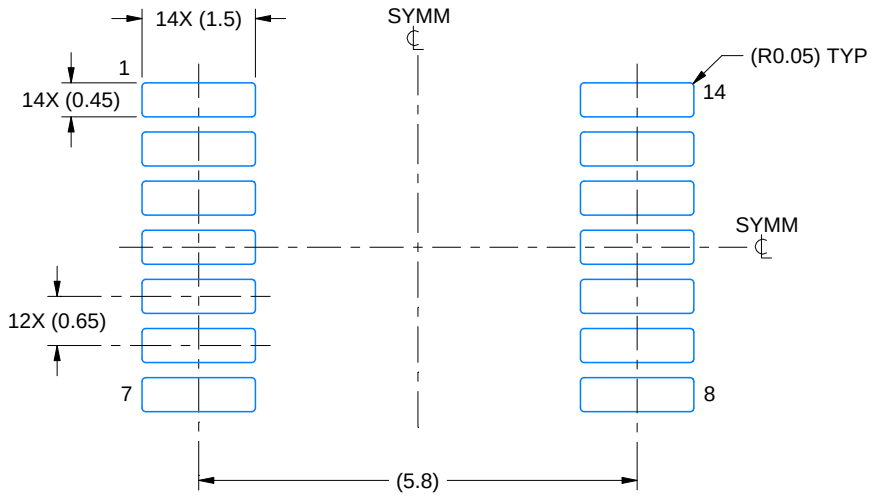

LAND PATTERN EXAMPLE
EXPOSED METAL SHOWN
SCALE: 10X

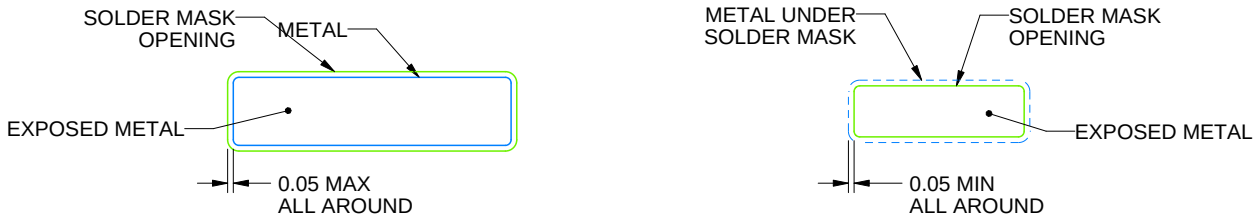

NON-SOLDER MASK DEFINED (PREFERRED)

SOLDER MASK DEFINED

SOLDER MASK DETAILS

4220202/B 12/2023

NOTES: (continued)

6. Publication IPC-7351 may have alternate designs.
7. Solder mask tolerances between and around signal pads can vary based on board fabrication site.

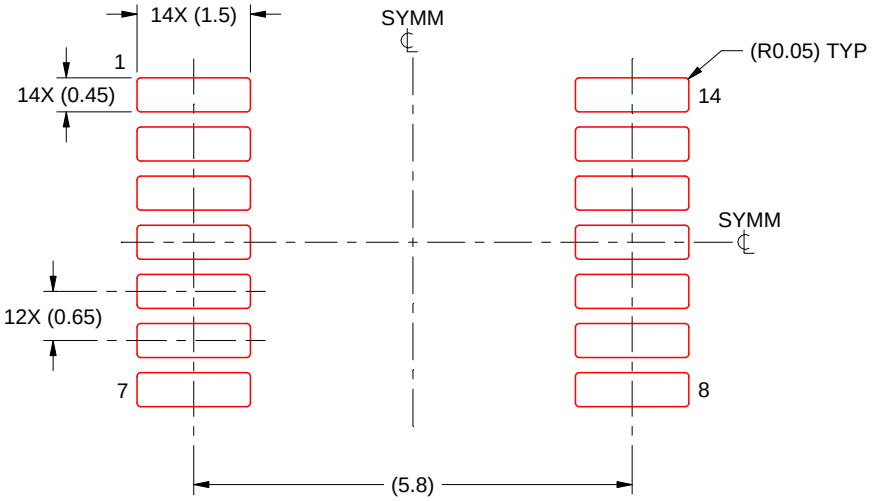

SOLDER PASTE EXAMPLE
BASED ON 0.125 mm THICK STENCIL
SCALE: 10X

4220202/B 12/2023

NOTES: (continued)

8. Laser cutting apertures with trapezoidal walls and rounded corners may offer better paste release. IPC-7525 may have alternate design recommendations.
9. Board assembly site may have different recommendations for stencil design.

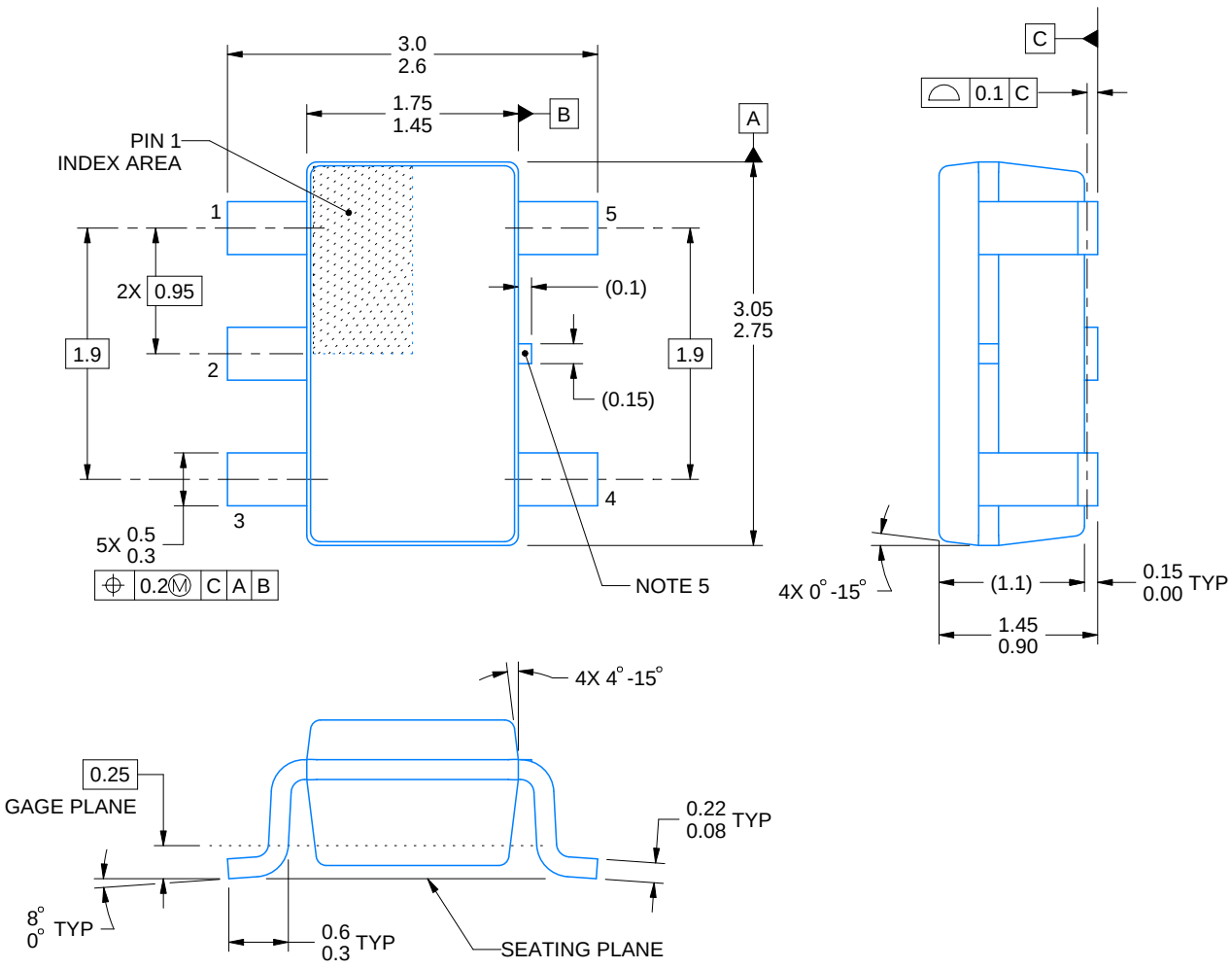

4214839/K 08/2024

NOTES:

1. All linear dimensions are in millimeters. Any dimensions in parenthesis are for reference only. Dimensioning and tolerancing per ASME Y14.5M.
2. This drawing is subject to change without notice.
3. Refernce JEDEC MO-178.
4. Body dimensions do not include mold flash, protrusions, or gate burrs. Mold flash, protrusions, or gate burrs shall not exceed 0.25 mm per side.
5. Support pin may differ or may not be present.

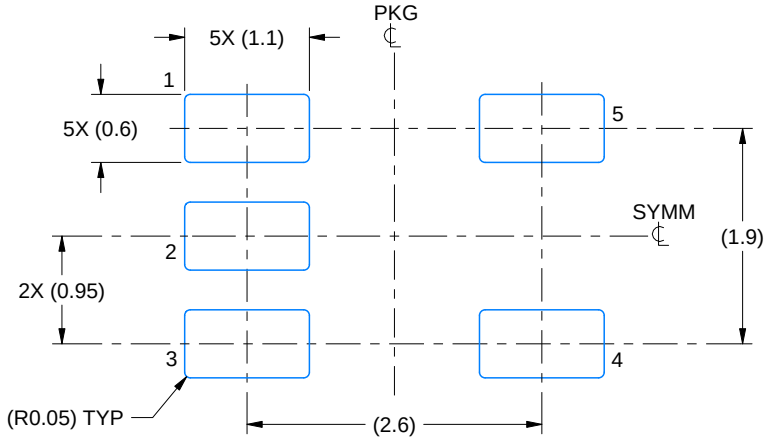

LAND PATTERN EXAMPLE
EXPOSED METAL SHOWN
SCALE:15X

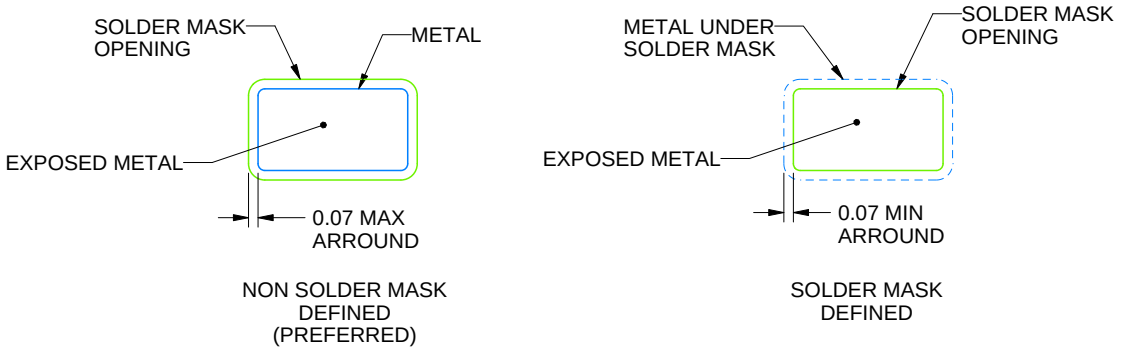

SOLDER MASK DETAILS

4214839/K 08/2024

NOTES: (continued)

6. Publication IPC-7351 may have alternate designs.
7. Solder mask tolerances between and around signal pads can vary based on board fabrication site.

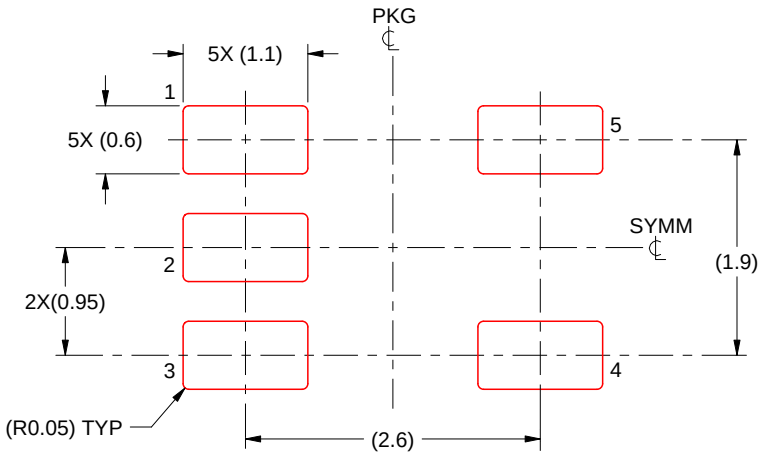

SOLDER PASTE EXAMPLE
BASED ON 0.125 mm THICK STENCIL
SCALE:15X

4214839/K 08/2024

NOTES: (continued)

8. Laser cutting apertures with trapezoidal walls and rounded corners may offer better paste release. IPC-7525 may have alternate design recommendations.
9. Board assembly site may have different recommendations for stencil design.

PACKAGE OUTLINE

DGK0008A

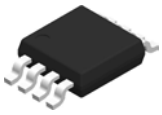

VSSOP - 1.1 mm max height

SMALL OUTLINE PACKAGE

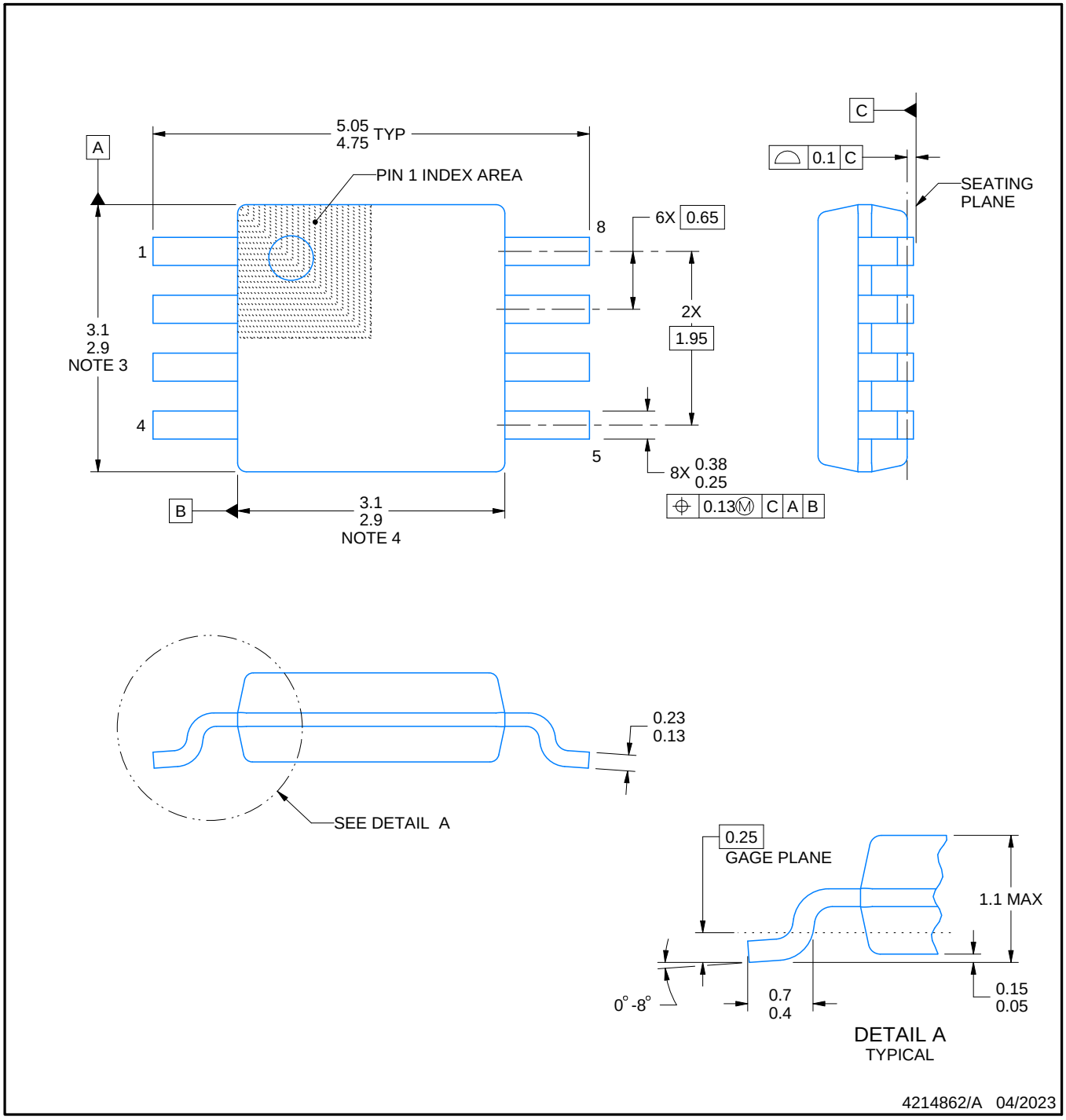

PowerPAD is a trademark of Texas Instruments.

NOTES:

1. All linear dimensions are in millimeters. Any dimensions in parenthesis are for reference only. Dimensioning and tolerancing per ASME Y14.5M.
2. This drawing is subject to change without notice.
3. This dimension does not include mold flash, protrusions, or gate burrs. Mold flash, protrusions, or gate burrs shall not exceed 0.15 mm per side.
4. This dimension does not include interlead flash. Interlead flash shall not exceed 0.25 mm per side.
5. Reference JEDEC registration MO-187.

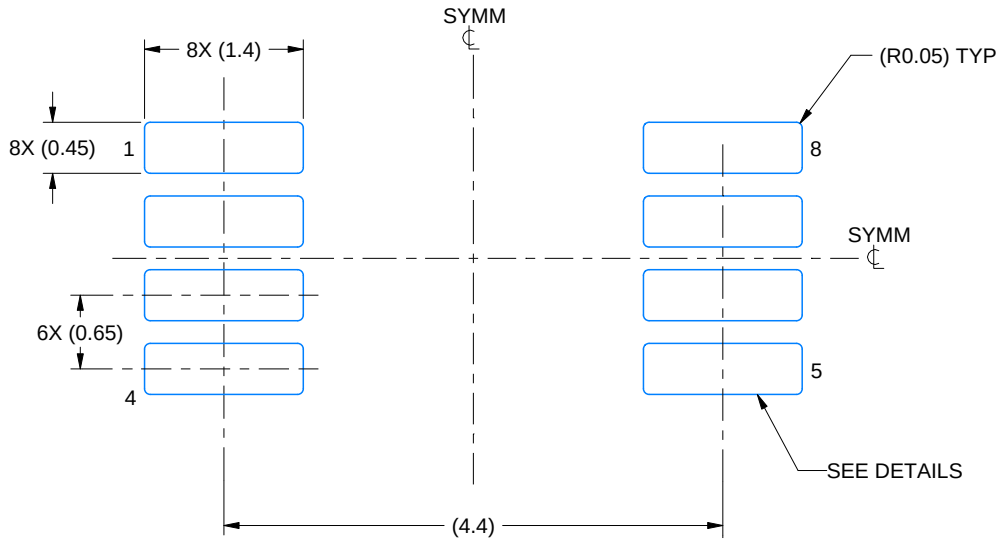

LAND PATTERN EXAMPLE
EXPOSED METAL SHOWN
SCALE: 15X

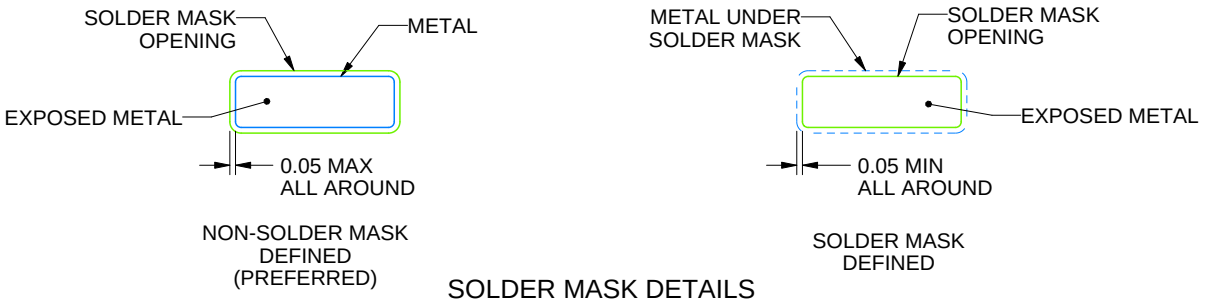

SOLDER MASK DETAILS

4214862/A 04/2023

NOTES: (continued)

6. Publication IPC-7351 may have alternate designs.
7. Solder mask tolerances between and around signal pads can vary based on board fabrication site.
8. Vias are optional depending on application, refer to device data sheet. If any vias are implemented, refer to their locations shown on this view. It is recommended that vias under paste be filled, plugged or tented.
9. Size of metal pad may vary due to creepage requirement.

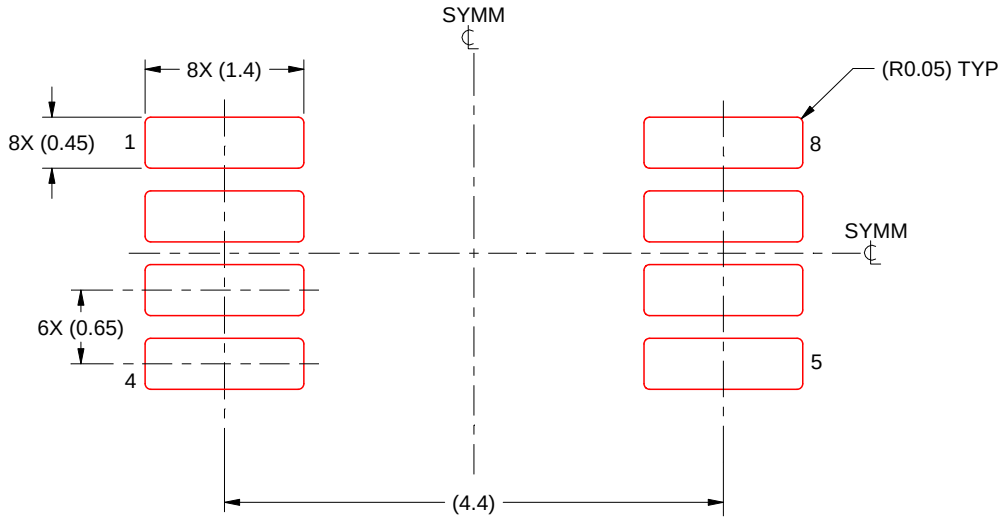

SOLDER PASTE EXAMPLE
SCALE: 15X

4214862/A 04/2023

NOTES: (continued)

11. Laser cutting apertures with trapezoidal walls and rounded corners may offer better paste release. IPC-7525 may have alternate design recommendations.
12. Board assembly site may have different recommendations for stencil design.

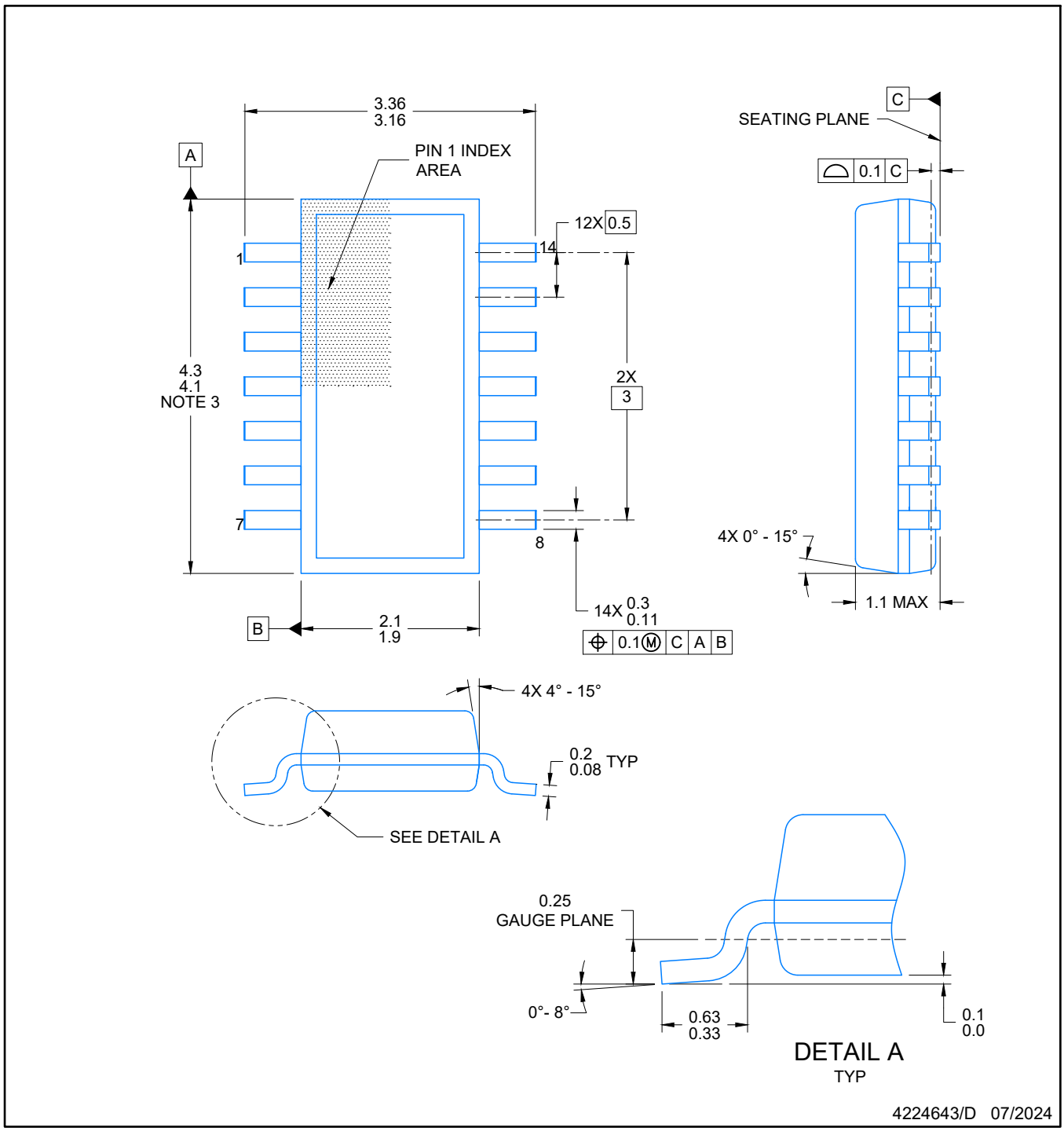

NOTES:

1. All linear dimensions are in millimeters. Any dimensions in parenthesis are for reference only. Dimensioning and tolerancing per ASME Y14.5M.
2. This drawing is subject to change without notice.
3. This dimension does not include mold flash, protrusions, or gate burrs. Mold flash, protrusions, or gate burrs shall not exceed 0.15 per side.
4. This dimension does not include interlead flash. Interlead flash shall not exceed 0.50 per side.
5. Reference JEDEC Registration MO-345, Variation AB

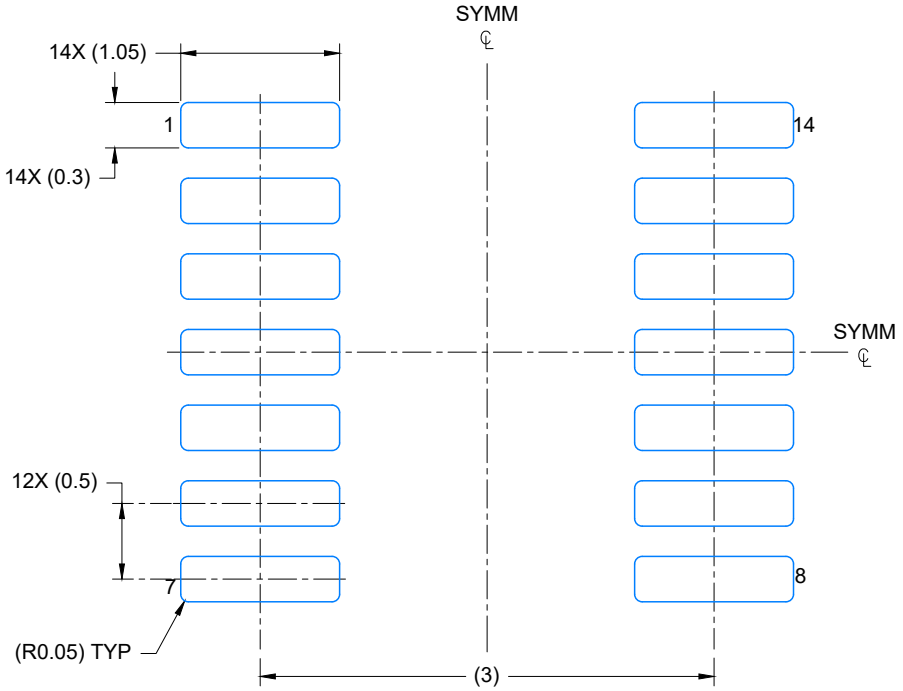

LAND PATTERN EXAMPLE
EXPOSED METAL SHOWN
SCALE: 20X

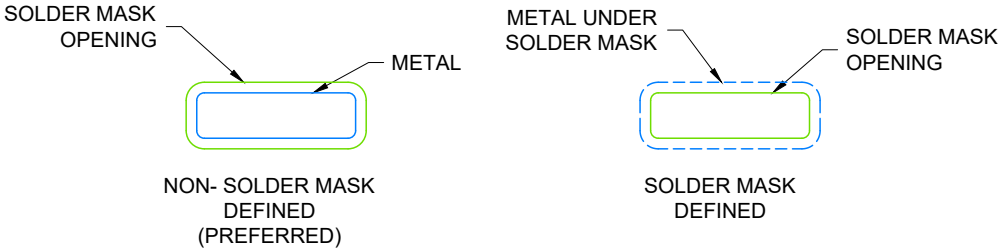

SOLDER MASK DETAILS

4224643/D 07/2024

NOTES: (continued)

6. Publication IPC-7351 may have alternate designs.
7. Solder mask tolerances between and around signal pads can vary based on board fabrication site.

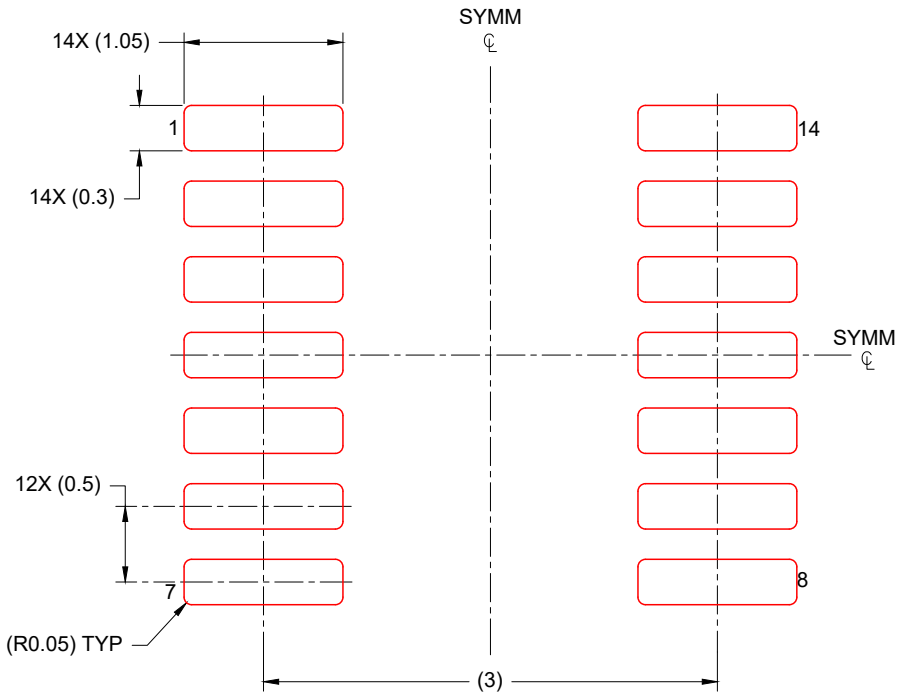

SOLDER PASTE EXAMPLE
BASED ON 0.125 mm THICK STENCIL
SCALE: 20X

4224643/D 07/2024

NOTES: (continued)

8. Laser cutting apertures with trapezoidal walls and rounded corners may offer better paste release. IPC-7525 may have alternate design recommendations.
9. Board assembly site may have different recommendations for stencil design.

重要なお知らせと免責事項

TI は、技術データと信頼性データ (データシートを含みます)、設計リソース (リファレンス デザインを含みます)、アプリケーションや設計に関する各種アドバイス、Web ツール、安全性情報、その他のリソースを、欠陥が存在する可能性のある「現状のまま」提供しており、商品性および特定目的に対する適合性の黙示保証、第三者の知的財産権の非侵害保証を含むいかなる保証も、明示的または黙示的にかかわらず拒否します。

これらのリソースは、TI 製品を使用する設計の経験を積んだ開発者への提供を意図したものです。(1) お客様のアプリケーションに適した TI 製品の選定、(2) お客様のアプリケーションの設計、検証、試験、(3) お客様のアプリケーションに該当する各種規格や、その他のあらゆる安全性、セキュリティ、規制、または他の要件への確実な適合に関する責任を、お客様のみが単独で負うものとします。

上記の各種リソースは、予告なく変更される可能性があります。これらのリソースは、リソースで説明されている TI 製品を使用するアプリケーションの開発の目的でのみ、TI はその使用をお客様に許諾します。これらのリソースに関して、他の目的で複製することや掲載することは禁止されています。TI や第三者の知的財産権のライセンスが付与されている訳ではありません。お客様は、これらのリソースを自身で使用した結果発生するあらゆる申し立て、損害、費用、損失、責任について、TI およびその代理人を完全に補償するものとし、TI は一切の責任を拒否します。

TI の製品は、 TI の販売条件 、 TI の総合的な品質ガイドライン 、 ti.com または TI 製品などに関連して提供される他の適用条件に従い提供されます。TI がこれらのリソースを提供することは、適用される TI の保証または他の保証の放棄の拡大や変更を意味するものではありません。 TI がカスタム、またはカスタマー仕様として明示的に指定していない限り、TI の製品は標準的なカタログに掲載される汎用機器です。

お客様がいかなる追加条項または代替条項を提案する場合も、TI はそれらに異議を唱え、拒否します。

Copyright © 2026, Texas Instruments Incorporated

最終更新日：2025 年 10 月