LMX2592 VCO を内蔵した高性能、広帯域の PLLatinum™ RF シンセサイザ

1 特長

- 出力周波数範囲:20～9800MHz
- 業界をリードする位相ノイズ性能
  - VCO 位相ノイズ:6GHz 出力で 1MHz オフセット時に -134.5dBc/Hz
  - 正規化された PLL ノイズ・フロア:-231dBc/Hz
  - 正規化された PLL フリッカー・ノイズ:-126dBc/Hz
  - 6GHz 出力で 49fs RMS ジッタ (12kHz～20MHz)
- 最高 1400MHz の入力クロック周波数
- 位相検出器の周波数は最大 200MHz、整数 N モードでは最大 400MHz
- フラクショナル N および整数 N モードをサポート
- デュアル差動出力
- スプリアスを低減する革新的なソリューション
- 位相調整をプログラム可能
- チャージ・ポンプ電流をプログラム可能
- 出力電力レベルをプログラム可能
- SPI または uWire (4 線式シリアル・インターフェイス)
- 単一電源ソリューション:3.3V

2 アプリケーション

- テストおよび計測機器
- 防衛およびレーダー
- マイクロ波バックホール
- 高速データ・コンバータ用の高性能クロック・ソース
- 衛星通信

3 概要

LMX2592 デバイスは、20MHz～9.8GHz の周波数範囲をサポートする VCO 内蔵の低ノイズ、広帯域 RF PLL です。このデバイスは、フラクショナル N モードと整数 N モードの両方をサポートしており、32 ビットの分数デバイダを使用して、周波数を細かく選択できます。6GHz 出力で 49fs の積分ノイズにより、理想的な低ノイズ源となります。クラス最高の PLL と積分 VCO ノイズを内蔵 LDO と組み合わせることで、高性能システムに複数のディスクリート・デバイスは不要になります。

このデバイスは、最大 1.4GHz の入力周波数を受け付け、周波数デバイダとプログラマブルな低ノイズ・マルチプライヤとの組み合わせにより、柔軟な周波数計画が可能です。プログラム可能な低ノイズ・マルチプライヤが追加されているため、ユーザーは整数境界スプリアスの影響を低減できます。フラクショナル N モードでは、出力位相を 32 ビット分解能で調整できます。高速な周波数変更が必要なアプリケーション向けに、25µs 未満の高速キャリブレーション・オプションをサポートしています。

この性能は、単一の 3.3V 電源で達成されます。2 つのフレキシブルな差動出力をサポートしており、シングルエンド出力として構成することもできます。出力の 1 つを VCO (またはダブラ) から、もう 1 つの出力をチャネル・デバイダからプログラムすることを選択できます。使用しない出力は個別にミュートできます。

パッケージ情報(1)

型番	説明	本体サイズ (公称)
LMX2592RHAT LMX2592RHAR	VQFN (40)	6.00mm × 6.00mm

(1) 利用可能なパッケージについては、このデータシートの末尾にある注文情報を参照してください。

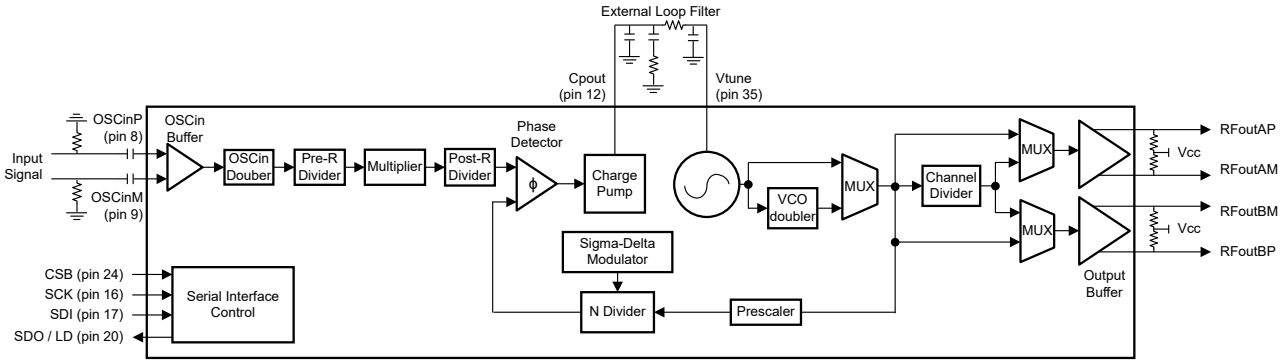

概略回路図

英語版の TI 製品についての情報を翻訳したこの資料は、製品の概要を確認する目的で便宜的に提供しているものです。該当する正式な英語版の最新情報は、www.ti.com で閲覧でき、その内容が常に優先されます。TI では翻訳の正確性および妥当性につきましては一切保証いたしません。実際の設計などの前には、必ず最新版の英語版をご参照くださいますようお願いいたします。

Table of Contents

1 特長 ... 1
2 アプリケーション ... 1
3 概要 ... 1
4 Revision History ... 2
5 Pin Configuration and Functions ... 4
6 Specifications ... 6
6.1 Absolute Maximum Ratings ... 6
6.2 ESD Ratings ... 6
6.3 Recommended Operating Conditions ... 6
6.4 Thermal Information ... 6
6.5 Electrical Characteristics ... 7
6.6 Timing Requirements ... 8
6.7 Typical Characteristics ... 10
7 Detailed Description ... 13
7.1 Overview ... 13
7.2 Functional Block Diagram ... 13
7.3 Functional Description ... 13
7.4 Device Functional Modes ... 17
7.5 Programming ... 18
7.6 Register Maps ... 19
8 Application and Implementation ... 30
8.1 Application Information ... 30
8.2 Typical Application ... 37
8.3 Power Supply Recommendations ... 38
8.4 Layout ... 39
9 Device and Documentation Support ... 40
9.1 Device Support ... 40
9.2 Documentation Support ... 40
9.3 Receiving Notification of Documentation Updates ... 40
9.4 サポート・リソース ... 40
9.5 Trademarks ... 40
9.6 Electrostatic Discharge Caution ... 40
9.7 Glossary ... 40
10 Mechanical, Packaging, and Orderable Information ... 41

4 Revision History

資料番号末尾の英字は改訂を表しています。その改訂履歴は英語版に準じています。

Changes from Revision F (October 2017) to Revision G (August 2022) — **Page**

- パッケージの説明を WQFN から VQFN に変更 ... 1
- Added a new requirement to Vtune pin description ... 4
- Added HD2 and HD3 information to the *Electrical Characteristics* table ... 7
- Removed sentence: The CLK signal should not be high when LE transitions to low ... 8
- Changed the Channel Divider requirement ... 16
- Added a new register field, VTUNE_ADJ, in register R30 ... 19
- Changed the position of register field, PFD_CTL, in register R13 ... 19
- Added read only register R68, R69 and R70 ... 19
- Added additional requirement for register CP_ICOARSE in 表 7-16 ... 20
- Added additional information for register MUXOUT_HDRV in 表 7-44 ... 20
- Added a new register field, VTUNE_ADJ, in 表 7-25 ... 20
- Changed the register R0 FCAL_LPFD_ADJ configurable values ... 20
- Changed the register R13 PFD_CTL position ... 20
- Added the R68, R69 and R70 register field descriptions ... 20
- Added *External Loop Filter* section ... 36
- Moved the *Power Supply Recommendations* and *Layout* sections to the *Application and Implementation* section ... 38

Changes from Revision E (July 2017) to Revision F (October 2017) — **Page**

- Switched the RFoutBP and RFoutBM pins in the pinout diagram ... 4
- Changed register 7 and the register descriptions of 4, 20 and 46 ... 19

Changes from Revision D (February 2017) to Revision E (July 2017) — **Page**

- Changed *Channel Divider Setting as a Function of the Desired Output Frequency* table ... 16

Changes from Revision C (October 2016) to Revision D (January 2017) — **Page**

- 「特長」から「25µs 未満の高速キャリブレーション・モード」の箇条書き項目を削除 ... 1
- Changed the high level input voltage minimum value of from: 1.8 to: 1.4 ... 7
- Changed text from: the rising edge of the LE signal to: the rising edge of the last CLK signal ... 8

Copyright © 2022 Texas Instruments Incorporated

- Changed text from: the shift registers to an actual counter to: the shift registers to a register bank.....8
- Added content to the *Voltage Controlled Oscillator* section.....15
- Changed *Channel Divider Setting as a Function of the Desired Output Frequency* table.....16
- Changed register 0, 22, and 64 descriptions.....19

Changes from Revision B (July 2016) to Revision C (September 2016) — Page

- 最新のドキュメントおよび翻訳基準に合わせて、データシートのテキストを更新.....1
- Changed pin 30 name from: Rext to: NC.....4
- Changed CDM value from: ±1250 V to: ±750 V.....6
- Changed parameter name from: Maximum reference input frequency to: reference input frequency.....7
- Removed the charge pump current TYP range '0 to 12' and split range into MIN (0) and MAX (12) columns.....7
- Moved all typical values in the *Timing Requirements* table to minimum column.....8
- Changed output frequency units from: MHz to: Hz in graphic.....10
- Changed high input value from: 700 to: 200.....14
- Changed high input value from: 1400 to: 400.....14
- Changed minimum output frequency step from: Fpd / PLL_DEN to: Fpd × PLL_N_PRE / PLL_DEN / [Channel divider value].....14
- Changed text from: output dividers to: channel dividers.....15
- Changed output frequency from: 3600 to: 3550.....16
- Changed VCO frequency from: 7200 to: 7100.....16
- Changed Phase shift (degrees) from: 360 × MASH_SEED / PLL_N_DEN / [Channel divider value] to: 360 x MASH_SEED x PLL_N_PRE / PLL_N_DEN / [Channel divider value]".....17
- Changed register 7, 8, 19, 23, 32, 33, 34, 46, and 64 descriptions.....19
- Added registers 20, 22, 25, 59, and 61.....19
- Changed register descriptions from: Program to default to: Program to Register Map default values.....20
- Updated content in the *Decreasing Lock Time* section.....35
- Changed typical application image.....37
- Changed charge pump value from: 4.8 to: 20.....38
- Changed R2 value from: 0.068 to: 68.....38

Changes from Revision A (December 2015) to Revision B (July 2016) — Page

- Added VCO Calibration Time to *Electrical Characteristics*.....7
- Added registers 2, 4, and 62 to *Register Table*.....19
- Changed register 38 in *Register Table*.....19
- Added *R2 Register Field Descriptions*.....20
- Added *R4 Register Field Descriptions*.....20
- Added *R62 Register Field Descriptions*.....20

Changes from Revision * (December 2015) to Revision A (December 2015) — Page

- デバイスのステータスを製品プレビューから量産データに変更し、フルバージョンのデータシートをリリース.....1

5 Pin Configuration and Functions

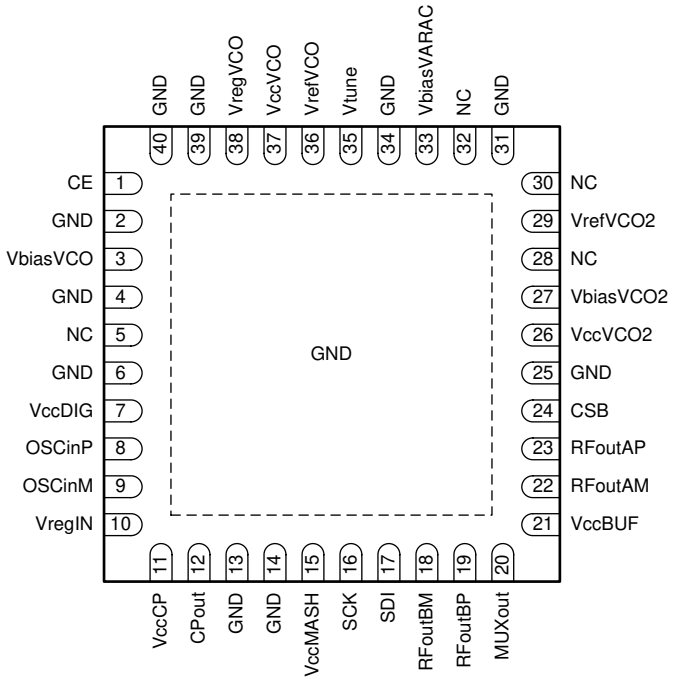

図 5-1. RHA Package 40-Pin VQFN Top View

表 5-1. Pin Functions

PIN		TYPE	DESCRIPTION
NAME	NO.		
CE	1	Input	Chip Enable input. Active high powers on the device.
CPout	12	Output	Charge pump output. Recommend connecting C1 of loop filter close to pin.
CSB	24	Input	SPI chip select bar or uWire latch enable (abbreviated as LE in 図 6-1). High impedance CMOS input. 1.8 to 3.3-V logic.
DAP	GND	Ground	RFout ground.
GND	2, 4, 6, 13, 14, 25, 31, 34, 39, 40	Ground	VCO ground.
MUXout	20	Output	Programmable with register MUXOUT_SEL to be readback SDO or lock detect indicator (active high).
NC	5, 28, 30, 32	—	Not connected.
OSCinP	8	Input	Differential reference input clock (+). High input impedance. Requires connecting series capacitor (0.1-µF recommended).
OSCinM	9	Input	Differential reference input clock (–). High input impedance. Requires connecting series capacitor (0.1-µF recommended).
RFoutAM	22	Output	Differential output A (–). This output requires a pullup component for proper biasing. A 50-Ω resistor or inductor may be used. Place as close to output as possible.
RFoutAP	23	Output	Differential output A (+). This output requires a pullup component for proper biasing. A 50-Ω resistor or inductor may be used. Place as close to output as possible.
RFoutBP	19	Output	Differential output B (+). This output requires a pullup component for proper biasing. A 50-Ω resistor or inductor may be used. Place as close to output as possible.
RFoutBM	18	Output	Differential output B (–). This output requires a pullup component for proper biasing. A 50-Ω resistor or inductor may be used. Place as close to output as possible.
SCK	16	Input	SPI or uWire clock (abbreviated as CLK in 図 6-1). High impedance CMOS input. 1.8 to 3.3-V logic.

Copyright © 2022 Texas Instruments Incorporated

表 5-1. Pin Functions (continued)

PIN		TYPE	DESCRIPTION
NAME	NO.		
SDI	17	Input	SPI or uWire data (abbreviated as DATA in 図 6-1). High impedance CMOS input. 1.8 to 3.3-V logic.
VbiasVARAC	33	Bypass	VCO varactor internal voltage, access for bypass. Requires connecting 10-µF capacitor to VCO ground.
VbiasVCO	3	Bypass	VCO bias internal voltage, access for bypass. Requires connecting 10-µF capacitor to VCO ground. Place close to pin.
VbiasVCO2	27	Bypass	VCO bias internal voltage, access for bypass. Requires connecting 1-µF capacitor to VCO ground.
V_{CC}BUF	21	Supply	Output buffer supply. Requires connecting 0.1-µF capacitor to RFout ground.
V_{CC}CP	11	Supply	Charge pump supply. Recommend connecting 0.1-µF capacitor to charge pump ground.
V_{CC}DIG	7	Supply	Digital supply. Recommend connecting 0.1-µF capacitor to digital ground.
V_{CC}MASH	15	Supply	Digital supply. Recommend connecting 0.1-µF and 10-µF capacitor to digital ground.
V_{CC}VCO	37	Supply	VCO supply. Recommend connecting 0.1-µF and 10-µF capacitor to ground.
V_{CC}VCO2	26	Supply	VCO supply. Recommend connecting 0.1-µF and 10-µF capacitor to VCO ground.
VrefVCO	36	Bypass	VCO supply internal voltage, access for bypass. Requires connecting 10-µF capacitor to ground.
VrefVCO2	29	Bypass	VCO supply internal voltage, access for bypass. Requires connecting 10-µF capacitor to VCO ground.
VregIN	10	Bypass	Input reference path internal voltage, access for bypass. Requires connecting 1-µF capacitor to ground. Place close to pin.
VregVCO	38	Bypass	VCO supply internal voltage, access for bypass. Requires connecting 1-µF capacitor to ground.
Vtune	35	Input	VCO tuning voltage input. This signal should be kept away from noise sources. Connect a 3.3-nF or more capacitor to VCO ground.

Copyright © 2022 Texas Instruments Incorporated

6 Specifications

6.1 Absolute Maximum Ratings

over operating free-air temperature range (unless otherwise noted)[1]

		MIN	MAX	UNIT
V_{CC}	Power supply voltage	–0.3	3.6	V
V_{IN}	Input voltage to pins other than V_{CC} pins	–0.3	V_{CC} + 0.3	V
V_{OSCin}	Voltage on OSCin (pin 8 and pin 9)	≤1.8 with V_{CC} Applied	≤1 with V_{CC}= 0	Vpp
T_L	Lead temperature (solder 4 s)		260	°C
T_J	Junction temperature	–40	150	°C
T_{stg}	Storage temperature	–65	150	°C

(1) Stresses beyond those listed under *Absolute Maximum Ratings* may cause permanent damage to the device. These are stress ratings only, which do not imply functional operation of the device at these or any other conditions beyond those indicated under *Recommended Operating Conditions*. Exposure to absolute-maximum-rated conditions for extended periods may affect device reliability.

6.2 ESD Ratings

			VALUE	UNIT
$V_{(ESD)}$	Electrostatic discharge	Human-body model (HBM), per ANSI/ESDA/JEDEC JS-001[1]	±2500	V
		Charged-device model (CDM), per JEDEC specification JESD22-C101[2]	±750	
		Machine model (MM) ESD stress voltage	±250	

(1) JEDEC document JEP155 states that 500-V HBM allows safe manufacturing with a standard ESD control process. Manufacturing with less than 500-V HBM is possible with the necessary precautions. Pins listed as ±2500 V may actually have higher performance.
(2) JEDEC document JEP157 states that 250-V CDM allows safe manufacturing with a standard ESD control process. Manufacturing with less than 250-V CDM is possible with the necessary precautions. Pins listed as ±1250 V may actually have higher performance.

6.3 Recommended Operating Conditions

over operating free-air temperature range (unless otherwise noted)

		MIN	NOM	MAX	UNIT
V_{CC}	Power supply voltage	3.15		3.45	V
T_A	Ambient temperature	–40		85	°C
T_J	Junction temperature			125	°C

6.4 Thermal Information

THERMAL METRIC[1]		LMX2592 RHA (VQFN) 40 PINS	UNIT
$R_{\theta JA}$	Junction-to-ambient thermal resistance	30.5	°C/W
$R_{\theta JC(top)}$	Junction-to-case (top) thermal resistance	15.3	°C/W
$R_{\theta JB}$	Junction-to-board thermal resistance	5.4	°C/W
ψ_{JT}	Junction-to-top characterization parameter	0.2	°C/W
ψ_{JB}	Junction-to-board characterization parameter	5.3	°C/W
$R_{\theta JC(bot)}$	Junction-to-case (bottom) thermal resistance	0.9	°C/W

(1) For more information about traditional and new thermal metrics, see the *Semiconductor and IC Package Thermal Metrics* application report.

Copyright © 2022 Texas Instruments Incorporated

6.5 Electrical Characteristics

3.15 V ≤ V_{CC} ≤ 3.45 V, –40°C ≤ T_A ≤ 85°C.
Typical values are at V_{CC} = 3.3 V, 25°C (unless otherwise noted)

PARAMETER		TEST CONDITIONS		MIN	TYP	MAX	UNIT
POWER SUPPLY							
V_{CC}	Supply voltage				3.3		V
I_{CC}	Supply current	Single 6-GHz, 0-dBm output[1]			250		mA
I_{PD}	Powerdown current				3.7		mA
OUTPUT CHARACTERISTICS							
F_{out}	Output frequency			20		9800	MHz
P_{out}	Typical high output power	Output = 3 GHz, 50-Ω pullup, single-ended[2]			8		dBm
Tcal	VCO calibration time	Reference input = 100 MHz, 7-GHz desired output[8]			590	800	µs
INPUT SIGNAL PATH							
REFin	Reference input frequency			5		1400	MHz
REFv	Reference input voltage	AC-coupled, differential[3]		0.2		2	Vppd
MULin	Input signal path multiplier input frequency			40		70	MHz
MULout	Input signal path multiplier output frequency			180		250	MHz
PHASE DETECTOR AND CHARGE PUMP							
PDF	Phase detector frequency			5		200	MHz
		Extended range mode[4]		0.25		400	MHz
CPI	Charge pump current	Programmable		0		12	mA
PLL PHASE NOISE							
$PLL_flicker_Norm$	Normalized PLL Flicker Noise[5]				–126		dBc/Hz
PLL_FOM	Normalized PLL Noise Floor (PLL Figure of Merit)[5]				–231		dBc/Hz
VCO							
$\lvert\Delta T_{CL}\rvert$	Allowable temperature drift[6]	VCO not being recalibrated				125	°C
$PN_{open\ loop}$	Output = 3 GHz	100 kHz			–118.8		dBc/Hz
		1 MHz			–140.3		
		10 MHz			–155.1		
		100 MHz			–156.3		
	Output = 6 GHz	100 kHz			–112.6		
		1 MHz			–134.2		
		10 MHz			–152.6		
		100 MHz			–156.2		
	Output = 9.8 GHz	100 kHz			–108.2		
		1 MHz			–129.1		
		10 MHz			–140.5		
		100 MHz			–141.1		
HARMONIC DISTORTION[7]							
HD_fund	Harmonic Distortion fundamental feed-through with doubler enabled	8 GHz, VCO doubler enabled	Fundamental (4 GHz)		–26		

3.15 V ≤ V_{CC} ≤ 3.45 V, –40°C ≤ T_A ≤ 85°C.
Typical values are at V_{CC} = 3.3 V, 25°C (unless otherwise noted)

PARAMETER		TEST CONDITIONS	MIN	TYP	MAX	UNIT
HD2	2nd Order Harmonic Distortion(9)	Testing output A, output at 5 GHz, output power level at 8.5-dBm, single-ended output, other end terminated with 50 Ω.		–27		dBc
HD3	3rd Order Harmonic Distortion(9)			–25		dBc
DIGITAL INTERFACE						
V_{IH}	High level input voltage		1.4		V_{CC}	V
V_{IL}	Low level input voltage		0		0.4	V
I_{IH}	High level input current		–25		25	µA
I_{IL}	Low level input current		–25		25	µA
V_{OH}	High level output voltage	Load/Source Current of –350 µA		V_{CC} – 0.4		V
V_{OL}	Low level output voltage	Load/Sink Current of 500 µA		0.4		V
SPIW	Highest SPI write speed			75		MHz
SPIR	SPI read speed			50		MHz

(1) For typical total current consumption of 250 mA: 100-MHz input frequency, OSCin doubler bypassed, pre-R divider bypassed, multiplier bypassed, post-R divider bypassed, 100-MHz phase detector frequency, 0.468-mA charge pump current, channel divider off, one output on, 6GHz output frequency, 50-Ω output pullup, 0-dBm output power (differential). See the *Application and Implementation* section for more information.
(2) For a typical high output power for a single-ended output, with 50-Ω pullup on both M and P side, register OUTx_POW = 63. Un-used side terminated with 50-Ω load.
(3) There is internal voltage biasing so the OSCinM and OSCinP pins must always be AC-coupled (capacitor in series). Vppd is differential peak-to-peak voltage swing. If there is a differential signal (two are negative polarity of each other), the total swing is one subtracted by the other, each should be 0.1 to 1-Vppd. If there is a single-ended signal, it can have 0.2 to 2 Vppd. See the *Application and Implementation* section for more information.
(4) To use phase detector frequencies lower than 5-MHz set register FCAL_LPFD_ADJ = 3. To use phase detector frequencies higher than 200 MHz, you must be in integer mode, set register PFD_CTL = 3 (to use single PFD mode), set FCAL_HPFD_ADJ = 3. For more information, see the *Detailed Description* section.
(5) The PLL noise contribution is measured using a clean reference and a wide loop bandwidth and is composed into flicker and flat components. PLL_flat = PLL_FOM + 20 × log(Fvco/Fpd) + 10 × log(Fpd / 1Hz). PLL_flicker (offset) = PLL_flicker_Norm + 20 × log(Fvco / 1GHz) – 10 × log(offset / 10kHz). Once these two components are found, the total PLL noise can be calculated as PLL_Noise = 10 × log($10^{PLL_Flat / 10}$ + $10^{PLL_flicker / 10}$).
(6) Not tested in production. Ensured by characterization. Allowable temperature drift refers to programming the device at an initial temperature and allowing this temperature to drift without reprogramming the device, and still have the device stay in lock. This change could be up or down in temperature and the specification does not apply to temperatures that go outside the recommended operating temperatures of the device.
(7) Not tested in production. Typical numbers from characterization with output settings: 50-Ω pullup, OUTA_POW = 15, channel divider off.
(8) The is the calibration time from the time of FCAL_EN = 1 is triggered to the calibration algorithm completing and output at 7 GHz. A reference input signal of 100 MHz is used and register CAL_CLK_DIV = 0 for state machine clock to be 100 MHz. Faster calibration times can be achieve through changes of other register settings. See the *Application and Implementation* section for more information. This parameter is ensured by bench.
(9) This parameter is verified by characterization on evaluation board, not tested in production.

6.6 Timing Requirements

3.15 V ≤ V_{CC} ≤ 3.45 V, –40°C ≤ T_A ≤ 85°C, except as specified. Typical values are at V_{CC} = 3.3 V, T_A = 25°C

			MIN	TYP	MAX	UNIT
MICROWIRE TIMING						
tES	Clock to enable low time	See 図 6-1	5			ns
tCS	Data to clock setup time		2			ns
tCH	Data to clock hold time		2			ns
tCWH	Clock pulse width high		5			ns
tCWL	Clock pulse width low		5			ns
tCES	Enable to clock setup time		5			ns
tEWH	Enable pulse width high		2			ns

Copyright © 2022 Texas Instruments Incorporated

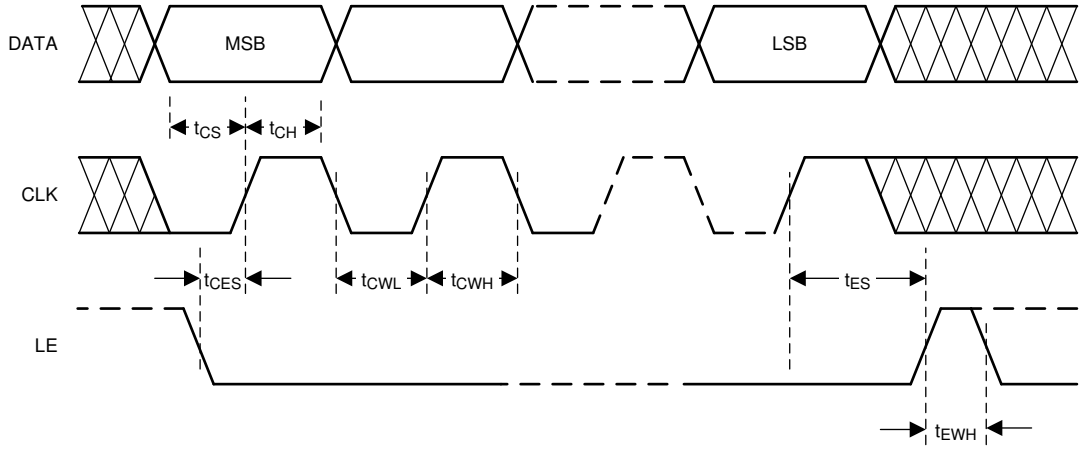

図 6-1. Serial Data Input Timing Diagram

There are several considerations for programming:

- A slew rate of at least 30 V/µs is recommended for the CLK, DATA, LE
- The DATA is clocked into a shift register on each rising edge of the CLK signal. On the rising edge of the last CLK signal, the data is sent from the shift registers to a register bank
- The LE pin may be held high after programming and clock pulses are ignored
- When CLK and DATA lines are shared between devices, TI recommends diving down the voltage to the CLK, DATA, and LE pins closer to the minimum voltage. This provides better noise immunity
- If the CLK and DATA lines are toggled while the VCO is in lock, as is sometimes the case when these lines are shared with other parts, the phase noise may be degraded during the time of this programming

6.7 Typical Characteristics

T_A = 25°C (unless otherwise noted)

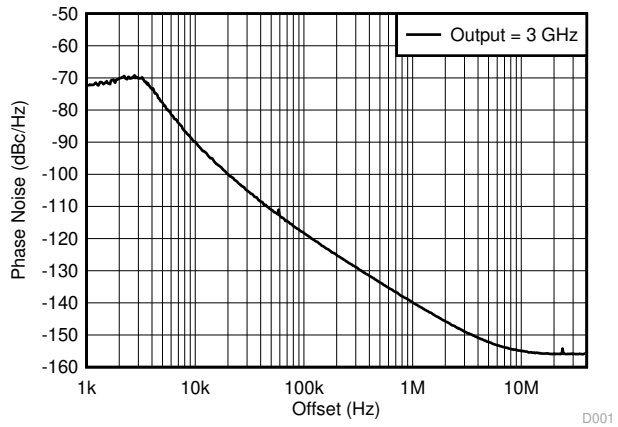

図 6-2. 3-GHz Output - Closed-Loop Phase Noise

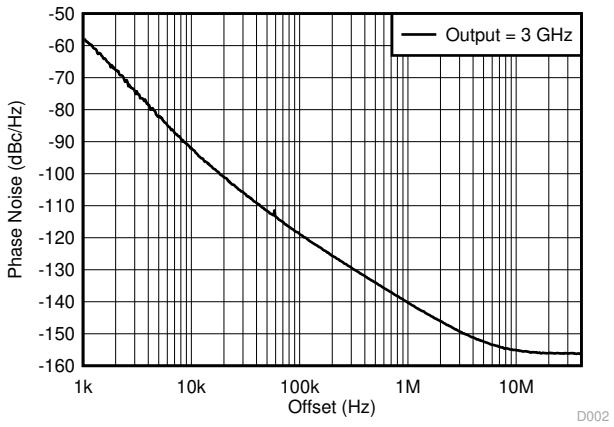

図 6-3. 3-GHz Output - Open-Loop Phase Noise

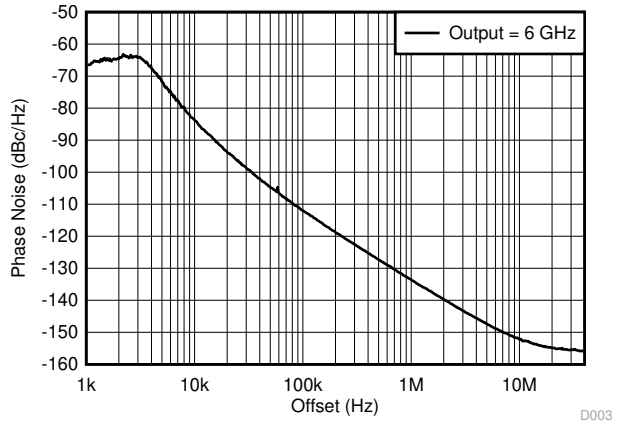

図 6-4. 6-GHz Output - Closed-Loop Phase Noise

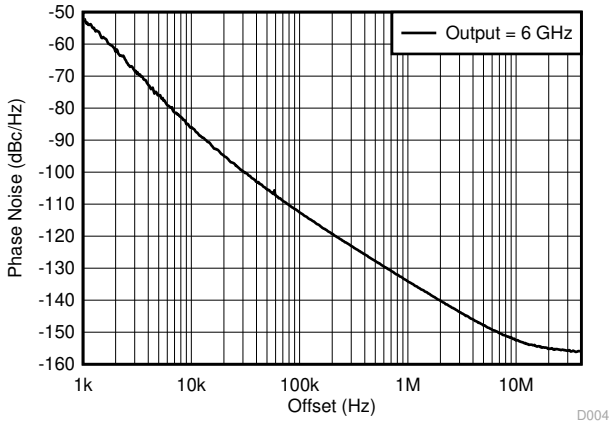

図 6-5. 6-GHz Output - Open-Loop Phase Noise

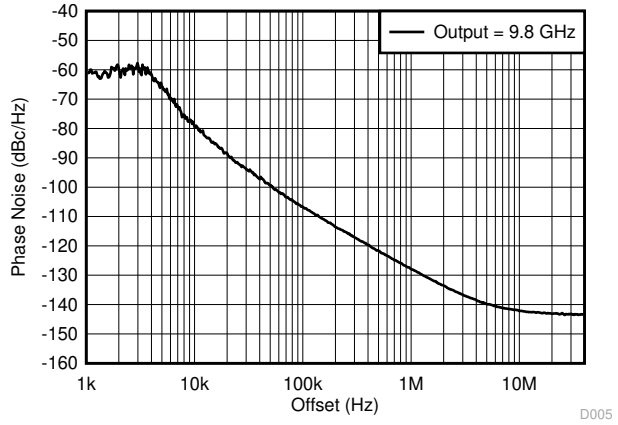

図 6-6. 9.8-GHz Output - Closed-Loop Phase Noise

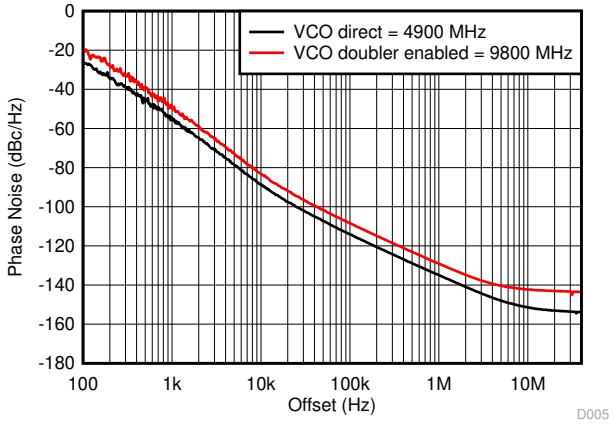

図 6-7. 9.8-GHz Output - Open-Loop Phase Noise

Copyright © 2022 Texas Instruments Incorporated

6.7 Typical Characteristics (continued)

T_A = 25°C (unless otherwise noted)

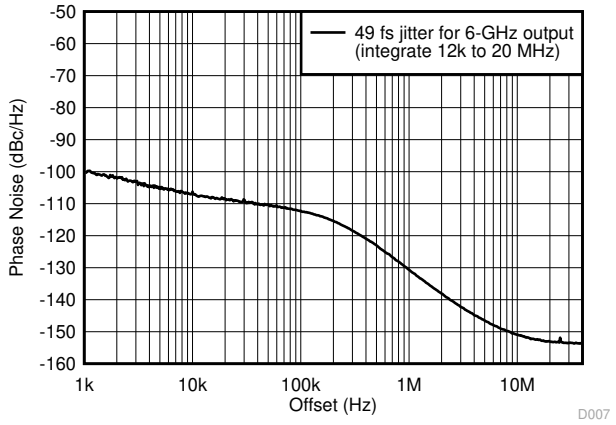

図 6-8. Integrated Jitter (49 fs) - 6-GHz Output

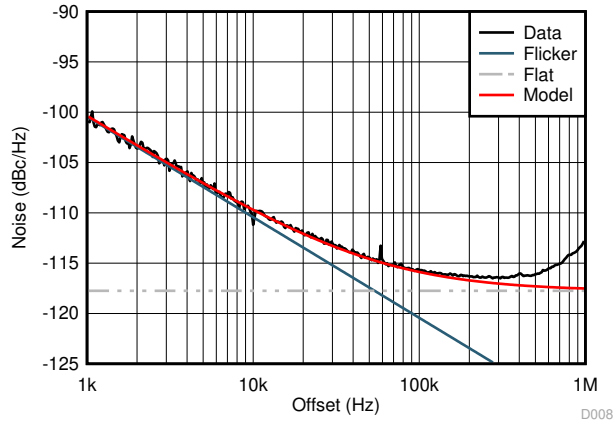

図 6-9. 6-GHz Output Wide Loop Bandwidth – Showing PLL Performance

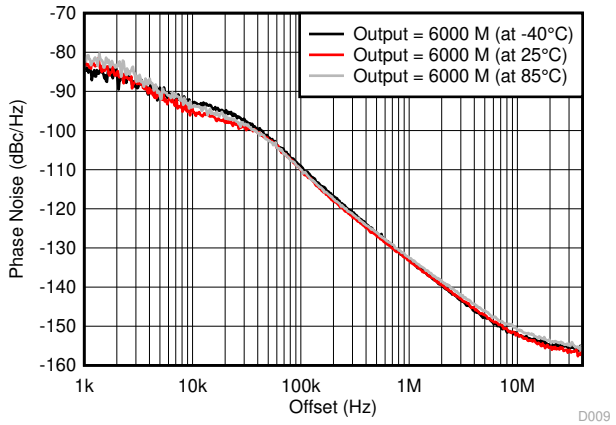

図 6-10. Variation of Phase Noise Across Temperature

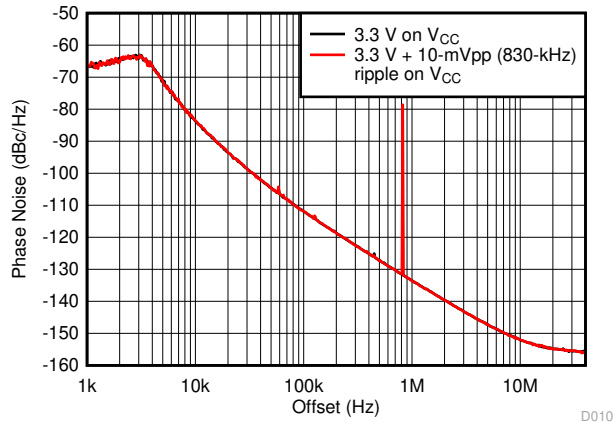

図 6-11. Impact of Supply Ripple on 6-GHz Output Phase Noise

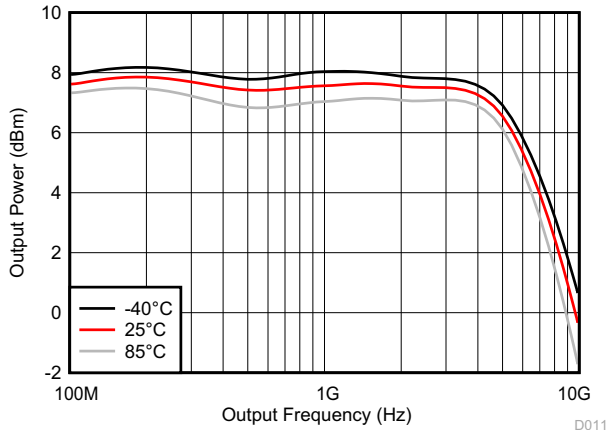

図 6-12. High Output Power (50-Ω Pullup, Single-Ended) vs Output Frequency

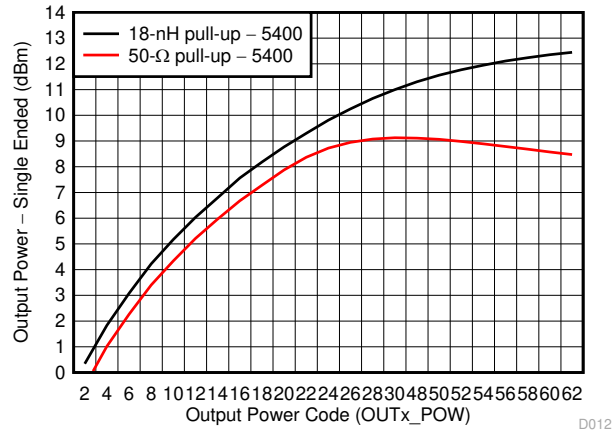

図 6-13. Output Power at 5.4-GHz Output vs OUTx_POW Code (1 - 31, 48 - 63)

6.7 Typical Characteristics (continued)

T_A = 25°C (unless otherwise noted)

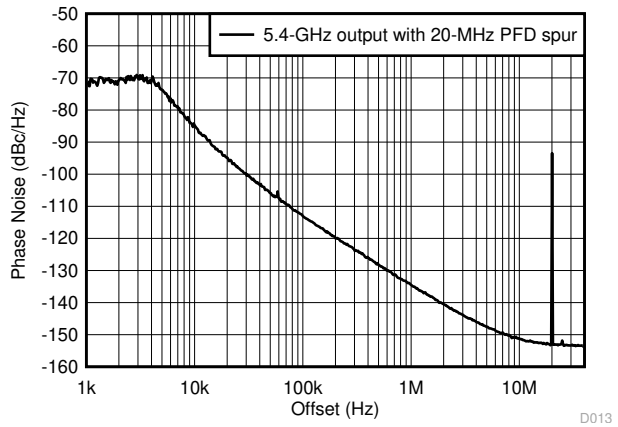

図 6-14. Typical PFD Spur for 5.4-GHz Output

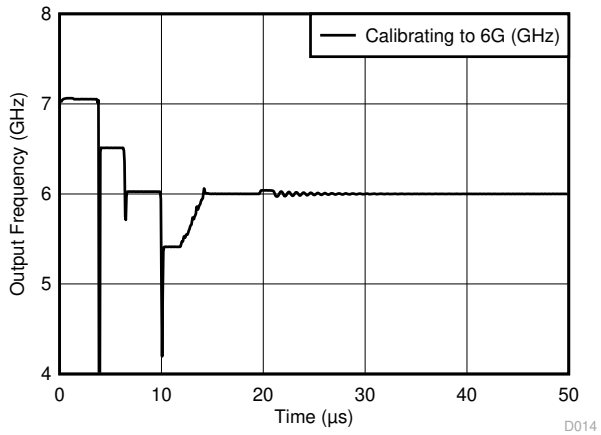

図 6-15. 20-µs Frequency Change Time to 6 GHz With Fast Calibration

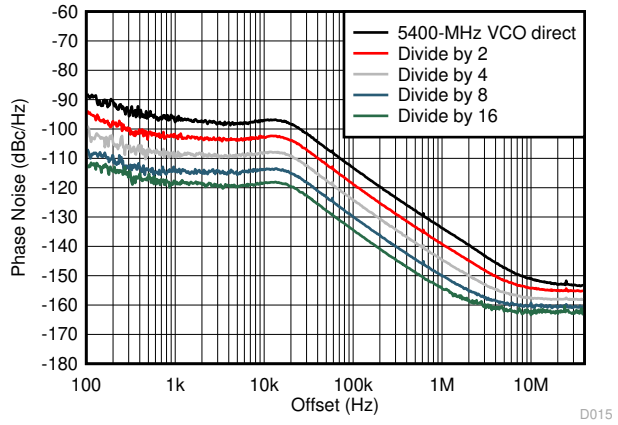

図 6-16. Impact of Channel Divider Settings on Phase Noise

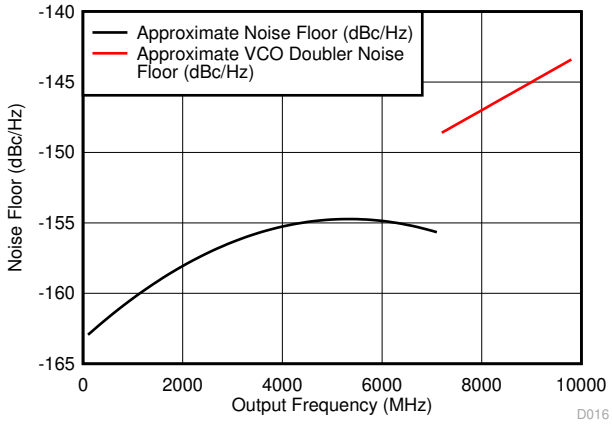

図 6-17. Noise Floor Variation With Output Frequency

Copyright © 2022 Texas Instruments Incorporated

7 Detailed Description

7.1 Overview

The LMX2592 is a high performance wideband synthesizer (PLL with integrated VCO). The output frequency range is from 20 MHz to 9.5 GHz. The VCO core covers an octave from 3.55 to 7.1 GHz. The output channel divider covers the frequency range from 20 MHz to the low bound of the VCO core. The VCO-doubler covers the frequency range from the upper bound of the VCO to 9800MHz.

The input signal frequency has a wide range from 5 to 1400 MHz. Following the input, there is an programmable OSCin doubler, a pre-R divider (previous to multiplier), a multiplier, and then a post-R divider (after multiplier) for flexible frequency planning between the input (OSCin) and the phase detector.

The phase detector (PFD) can take frequencies from 5 to 200 MHz, but also has extended modes down to 0.25 MHz and up to 400 MHz. The phase-lock loop (PLL) contains a Sigma-Delta modulator (1st to 4th order) for fractional N-divider values. The fractional denominator is programmable to 32-bit long, allowing a very fine resolution of frequency step. There is a phase adjust feature that allows shifting of the output phase in relation to the input (OSCin) by a fraction of the size of the fractional denominator.

The output power is programmable and can be designed for high power at a specific frequency by the pullup component at the output pin.

The digital logic is a standard 4-wire SPI or uWire interface and is 1.8-V and 3.3-V compatible.

7.2 Functional Block Diagram

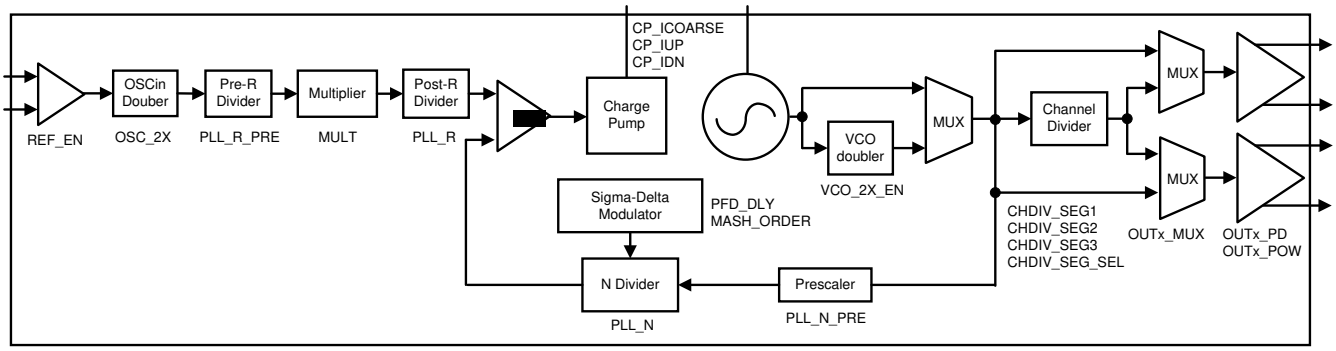

7.3 Functional Description

7.3.1 Input Signal

An input signal is required for the PLL to lock. The input signal is also used for the VCO calibration, so a proper signal needs to be applied before the start of programming. The input signal goes to the OSCinP and OSCinM pins of the device (there is internal biasing which requires AC-coupling caps in series before the pin). This is a differential buffer so the total swing is the OSCinM signal subtracted by the OSCinP signal. Both differential signals and single-ended signal can be used. Below is an example of the max signal level in each mode. It is important to have proper termination and matching on both sides (see *Application and Implementation*).

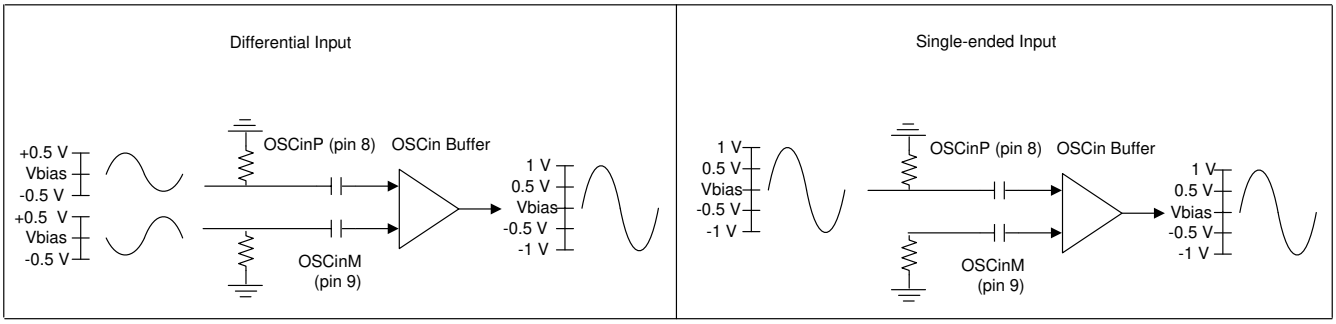

図 7-1. Differential vs. Single-Ended Mode

7.3.2 Input Signal Path

The input signal path contains the components between the input (OSCin) buffer and the phase detector. The best PLL noise floor is achieved with a 200-MHz input signal for the highest dual-phase detector frequency. To address a wide range of applications, the input signal path contains the below components for flexible configuration before the phase detector. Each component can be bypassed. See 表 7-1 for usage boundaries if engaging a component.

- OSCin doubler: This is low noise frequency doubler which can be used to multiply input frequencies by two. The doubler uses both the rising and falling edge of the input signal so the input signal must have 50% duty cycle if enabling the doubler. The best PLL noise floor is achieved with 200-MHz PFD, thus the doubler is useful if, for example, a very low-noise, 100-MHz input signal is available instead.
- Pre-R divider: This is a frequency divider capable of very high frequency inputs. Use this to divide any input frequency up to 1400-MHz, and then the post-R divider if lower frequencies are needed.
- Multiplier: This is a programmable, low noise multiplier. In combination with the Pre-R and Post-R dividers, the multiplier offers the flexibility to set a PFD away from frequencies that may create critical integer boundary spurs with the VCO and output frequencies. See the *Application and Implementation* section for an example. The user should not use the doubler while using the low noise programmable multiplier.
- Post-R divider: Use this divider to divide down to frequencies below 5 MHz in extended PFD mode.

表 7-1. Boundaries for Input Path Components

	INPUT		OUTPUT	
	LOW (MHz)	HIGH (MHz)	LOW (MHz)	HIGH (MHz)
Input signal	5	1400		
OSCin doubler	5	200	10	400
Pre-R divider	10	1400	5	700
Multiplier	40	70	180	250
Post-R divider	5	250	0.25	125
PFD	0.25	400		

7.3.3 PLL Phase Detector and Charge Pump

The PLL phase detector, also known as phase frequency detector (PFD), compares the outputs of the post-R divider and N divider and generates a correction current with the charge pump corresponding to the phase error until the two signals are aligned in phase (the PLL is locked). The charge pump output goes through external components (loop filter) which turns the correction current pulses into a DC voltage applied to the tuning voltage (Vtune) of the VCO. The charge pump gain level is programmable and allow to modify the loop bandwidth of the PLL.

The default architecture is a dual-loop PFD which can operate between 5 to 200 MHz. To use it in extended range mode the PFD has to be configured differently:

- Extended low phase detector frequency mode: For frequencies between 250 kHz and 5 MHz, low PFD mode can be activated (FCAL_LPFD_ADJ = 3). PLL_N_PRE also needs to be set to 4.
- Extended high phase detector frequency mode: For frequencies between 200 and 400 MHz, high PFD mode can be activated (FCAL_HPFD_ADJ = 3). The PFD also has to be set to single-loop PFD mode (PFD_CTL = 3). This mode only works if using integer-N, and PLL noise floor will be about 6-dB higher than in dual-loop PFD mode.

7.3.4 N Divider and Fractional Circuitry

The N divider (12 bits) includes a multi-stage noise shaping (MASH) sigma-delta modulator with programmable order from 1st to 4th order, which performs fractional compensation and can achieve any fractional denominator from 1 to (2^{32} – 1). Using programmable registers, PLL_N is the integer portion and PLL_NUM / PLL_DEN is the fractional portion, thus the total N divider value is determined by PLL_N + PLL_NUM / PLL_DEN. This allows the output frequency to be a fractional multiplication of the phase detector frequency. The higher the denominator the finer the resolution step of the output. There is a N divider prescaler (PLL_N_PRE) between the VCO and

Copyright © 2022 Texas Instruments Incorporated

the N divider which performs a division of 2 or 4. 2 is selected typically for higher performance in fractional mode and 4 may be desirable for lower power operation and when N is approaching max value.

Fvco = Fpd × PLL_N_PRE × (PLL_N + PLL_NUM / PLL_DEN)

Minimum output frequency step = Fpd × PLL_N_PRE / PLL_DEN / [Channel divider value]

Typically, higher modulator order pushes the noise out in frequency and may be filtered out with the PLL. However, several tradeoff needs to be made. 表 7-2 shows the suggested minimum N value while in fractional mode as a function of the sigma-delta modulator order. It also describe the recommended register setting for the PFD delay (register PFD_DLY_SEL).

表 7-2. MASH Order and N Divider

	INTEGER-N	1st ORDER	2nd ORDER	3rd ORDER	4th ORDER
Minimum N divider (low bound)	9	11	16	18	30
PFD delay recommended setting (PFD_DLY_SEL)	1	1	2	2	8

7.3.5 Voltage Controlled Oscillator

The voltage controlled oscillator (VCO) is fully integrated. The frequency range of the VCO is from 3.55 to 7.1 GHz so it covers one octave. Channel dividers allow the generation of all other lower frequencies. The VCO-doubler allow the generation of all other higher frequencies. The output frequency of the VCO is inverse proportional to the DC voltage present at the tuning voltage point on pin Vtune. The tuning range is 0 V to 2.5 V. 0 V generates the maximum frequency and 2.5 V generates the minimum frequency. This VCO requires a calibration procedure for each frequency selected to lock on. Each VCO calibration will force the tuning voltage to mid value and calibrate the VCO circuit. Any frequency setting in fast calibration occurs in the range of Vtune pin 0 V to 2.5 V. The VCO is designed to remained locked over the entire temperature range the device can support. 表 7-3 shows the VCO gain as a function of frequency.

表 7-3. Typical kVCO

VCO FREQUENCY (MHz)	kVCO (MHz/V)
3700	28
4200	30
4700	33
5200	36
5700	41
6200	47
6800	51

7.3.6 VCO Calibration

The VCO calibration is responsible of setting the VCO circuit to the target frequency. The frequency calibration routine is activated any time that the R0 register is programmed with the FCAL_EN = 1. A valid input (OSCin) signal to the device must present before the VCO calibration begins. To see how to reduce the calibration time, refer to the *Application and Implementation* section.

7.3.7 VCO Doubler

To go above the VCO upper bound, the VCO-doubler must be used (VCO_2X_EN=1). The doubling block can be enabled while the VCO is between 3.55 GHz (lowest VCO frequency) and 4.9 GHz. When VCO doubler is enabled, the N divider prescalar is automatically forced to divide by 4.

Copyright © 2022 Texas Instruments Incorporated

7.3.8 Channel Divider

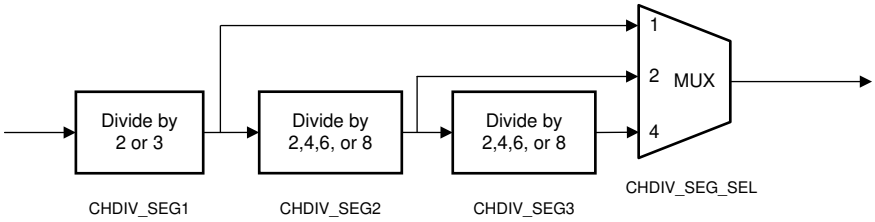

図 7-2. Channel Divider Diagram

To go below the VCO lower bound, the channel divider must be used. The channel divider consists of three programmable dividers controlled by the registers CHDIV_SEG1, CHDIV_SEG2, CHDIV_SEG3. The Multiplexer (programmed with register CHDIV_SEG_SEL) selects which divider is included in the path. The minimum division is 2 while the maximum division is 192. Un-used dividers can be powered down to save current consumption. The entire channel divider can be powered down with register CHDIV_EN = 0 or selectively setting registers CHDIV_SEG1_EN = 0, CHDIV_SEG2_EN = 0 ,CHDIV_SEG3_EN = 0. Unused buffers may also be powered down with registers CHDIV_DISTA_EN and CHDIV_DIST_EN. There are restrictions on the maximum VCO frequency when channel divider is engaged.

表 7-4. Channel Divider vs VCO Frequency

OUTPUT FREQUENCY (MHz)		CHDIV SEGMENT			TOTAL DIVISION	VCO FREQUENCY (MHz)	
MIN	MAX	SEG1	SEG2	SEG3		MIN	MAX
1775	3550	2	1	1	2	3550	7100
1184	2200	3	1	1	3	3552	6600
888	1184	2	2	1	4	3552	4736
592	888	3	2	1	6	3552	5328
444	592	2	4	1	8	3552	4736
296	444	2	6	1	12	3552	5328
222	296	2	8	1	16	3552	4736
148	222	3	8	1	24	3552	5328
111	148	2	8	2	32	3552	4736
99	111	3	6	2	36	3564	3996
74	99	3	8	2	48	3552	4752
56	74	2	8	4	64	3584	4736
37	56	2	8	6	96	3552	5376
28	37	2	8	8	128	3584	4736
20	28	3	8	8	192	3840	5376

Copyright © 2022 Texas Instruments Incorporated

7.3.9 Output Distribution

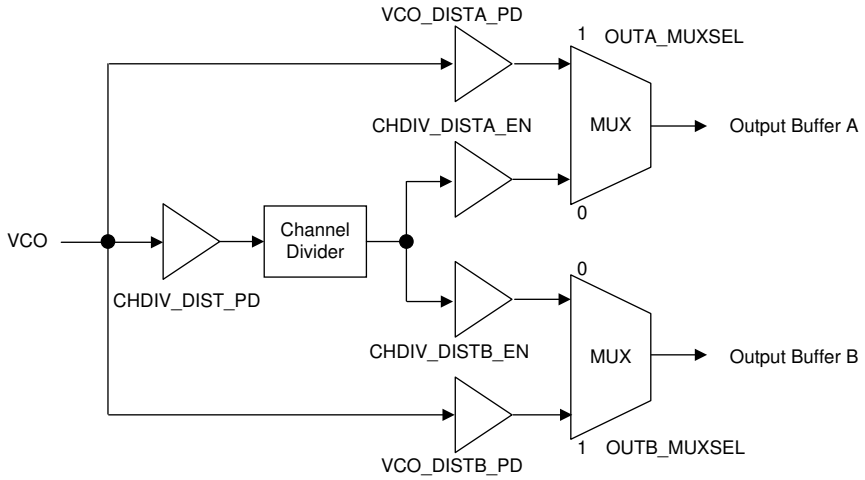

図 7-3. Output Distribution Diagram

For each output A or B, there is a mux which select the VCO output directly or the channel divider output. Before these selection MUX there are several buffers in the distribution path which can be configured depending on the route selected. By disabling unused buffers, unwanted signals can be isolated and unneeded current consumption can be eliminated.

7.3.10 Output Buffer

Each output buffer (A and B) have programmable gain with register OUTA_POW and OUTB_POW. The RF output buffer configuration is open-collector and requires an external pullup from RFout pin to V_{CC}. There are two pullup options that can be used with either resistor or inductor. Refer to the *Application and Implementation* section for design considerations.

1. Resistor pullup: placing a 50-Ω resistor pullup matches the output impedance to 50-Ω. However, maximum output power is limited. Output buffer current settings should be set to a value before output power is saturated (output power increases less for every step increase in output current value).
2. Inductor pullup: placing an inductor pullup creates a resonance at the frequency of interest. This offers higher output power for the same current and higher maximum output power. However, the output impedance is higher and additional matching may be required..

7.3.11 Phase Adjust

In fractional mode, the phase relationship between the output and the input can be changed with very fine resolution. Every time MASH_SEED register is written, it will trigger a phase shift of the amount described in 式 1. The seed value should be less then the fractional-N denominator register PLL_N_DEN. The actual phase shift can be obtained with the following equation:

$$\text{Phase shift (degrees)} = 360 \times \text{MASH_SEED} \times \text{PLL_N_PRE} / \text{PLL_N_DEN} / [\text{Channel divider value}] \quad (1)$$

7.4 Device Functional Modes

7.4.1 Power Down

Power up and down can be achieved using the CE pin (logic HIGH or LOW voltage) or the POWERDOWN register bit (0 or 1). When the device comes out of the powered-down state, either by pulling back CE pin HIGH (if it was powered down by CE pin) or by resuming the POWERDOWN bit to 0 (if it was powered down by register write), it is required that register R0 be programmed again to re-calibrate the device.

7.4.2 Lock Detect

The MUXout pin can be configured to output a signal that gives an indication for the PLL being locked. If lock detect is enabled (LD_EN = 1) and the MUXout pin is configured as lock detect output (MUXOUT_SEL = 1),

when the device is locked, the MUXout pin output is a logic HIGH voltage, and when the device is unlocked, MUXout output is a logic LOW voltage.

7.4.3 Register Readback

The MUXout pin can be programmed (MUXOUT_SEL = 0) to use register readback serial data output. Timing requirements for MUXout to CLK follow the same specifications as Data to CLK in *Timing Requirements*. To read back a certain register value, use the following steps:

1. Set the R/W bit to 1; the data field contents are ignored.
2. Program this register to the device, readback serial data will be output starting at the 9th clock.

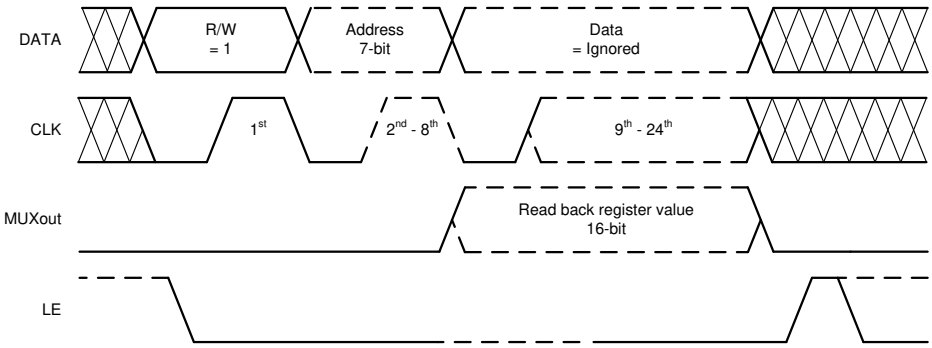

図 7-4. Register Readback Timing Diagram

7.5 Programming

The programming using 24-bit shift registers. The shift register consists of a R/W bit (MSB), followed by a 7-bit address field and a 16-bit data field. For the R/W (bit 23), 1 is read and 0 is write. The address field ADDRESS (bits 22:16) is used to decode the internal register address. The remaining 16 bits form the data field DATA (bits 15:0). While CSB is low, serial data is clocked into the shift register upon the rising edge of clock (data is programmed MSB first). When CSB goes high, data is transferred from the data field into the selected register bank.

7.5.1 Recommended Initial Power on Programming Sequence

When the device is first powered up, the device needs to be initialized and the ordering of this programming is very important. After this sequence is completed, the device should be running and locked to the proper frequency.

1. Apply power to the device and ensure the V_{CC} pins are at the proper levels
2. Ensure that a valid reference is applied to the OSCin pin
3. Soft reset the device (write R0[1] = 1)
4. Program the remaining registers
5. Frequency calibrate (write R0[3] = 1)

7.5.2 Recommended Sequence for Changing Frequencies

The recommended sequence for changing frequencies is as follows:

1. Set the new N divider value (write R38[12:1])
2. Set the new PLL numerator (R45 and R44) and denominator (R41 and R40)
3. Frequency calibrate (write R0[3] = 1)

Copyright © 2022 Texas Instruments Incorporated

7.6 Register Maps

7.6.1 LMX2592 Register Map – Default Values

図 7-5. Register Table

REG	23	22	21	20	19	18	17	16	15	14	13	12	11	10	9	8	7	6	5	4	3	2	1	0
	R/W	ADDRESS[6:0]							DATA [15:0]															
0	R/W	0	0	0	0	0	0	0	0	0	LD_EN	0	0	0	1	FCAL_HPFD_ADJ		FCAL_LPFD_ADJ		ACAL_EN	FCAL_EN	MUXOUT_SEL	RESET	POWERDOWN
1	R/W	0	0	0	0	0	0	1	0	0	0	0	1	0	0	0	0	0	0	0	1	CAL_CLK_DIV		
2	R/W	0	0	0	0	0	1	0	0	0	0	0	0	1	0	1	0	0	0	0	0	0	0	0
4	R/W	0	0	0	0	1	0	0	ACAL_CMP_DLY								0	1	0	0	0	0	1	1
7	R/W	0	0	0	0	1	1	1	0	0	1	0	1	0	0	0	1	0	1	1	0	0	1	0
8	R/W	0	0	0	1	0	0	0	0	0	VCO_IDAC_OVR	1	0	VCO_CAPCTRL_OVR	0	0	1	0	0	0	0	1	0	0
9	R/W	0	0	0	1	0	0	1	0	0	0	0	OSC_2X	0	REF_EN	1	0	0	0	0	0	0	1	0
10	R/W	0	0	0	1	0	1	0	0	0	0	1	MULT					1	0	1	1	0	0	0
11	R/W	0	0	0	1	0	1	1	0	0	0	0	PLL_R								1	0	0	0
12	R/W	0	0	0	1	1	0	0	0	1	1	1	PLL_R_PRE											
13	R/W	0	0	0	1	1	0	1	0	CP_EN	0	0	0	0	0	0	0	0	0	0	0	0	PFD_CTL	
14	R/W	0	0	0	1	1	1	0	0	0	0	0	CP_IDN					CP_IUP					CP_ICOARSE	
19	R/W	0	0	1	0	0	1	1	0	0	0	0	VCO_IDAC									1	0	1
20	R/W	0	0	1	0	1	0	0	0	0	0	0	0	0	0	ACAL_VCO_IDAC_STRT								
22	R/W	0	0	1	0	1	1	0	0	0	1	0	0	0	1	1	VCO_CAPCTRL							
23	R/W	0	0	1	0	1	1	1	1	FCAL_VCO_SEL_STRT	VCO_SEL			VCO_SEL_FORCE	0	0	0	1	0	0	0	0	1	0
24	R/W	0	0	1	1	0	0	0	0	0	0	0	0	1	0	1	0	0	0	0	1	0	0	1
25	R/W	0	0	1	1	0	0	1	0	0	0	0	0	0	0	0	0	0	0	0	0	0	0	0
28	R/W	0	0	1	1	1	0	0	0	0	1	0	1	0	0	1	0	0	1	0	0	1	0	0
29	R/W	0	0	1	1	1	0	1	0	0	0	0	0	0	0	0	1	0	0	0	0	1	0	0
30	R/W	0	0	1	1	1	1	0	0	0	0	0	0	MASH_DITHER	0	0	VTUNE_ADJ		1	1	0	1	0	VCO_2X_EN
31	R/W	0	0	1	1	1	1	1	0	0	0	0	0	VCO_DISTB_PD	VCO_DISTA_PD	0	CHDIV_DIST_PD	0	0	0	0	0	0	1
32	R/W	0	1	0	0	0	0	0	0	0	1	0	0	0	0	1	0	0	0	0	1	0	1	0
33	R/W	0	1	0	0	0	0	1	0	0	1	0	1	0	1	0	0	0	0	0	1	0	1	0
34	R/W	0	1	0	0	0	1	0	1	1	0	0	0	0	1	1	1	1	CHDIV_EN	0	1	0	1	0
35	R/W	0	1	0	0	0	1	1	0	0	0	CHDIV_SEG2				CHDIV_SEG3_EN	CHDIV_SEG2_EN	0	0	1	1	CHDIV_SEG1	CHDIV_SEG1_EN	1

図 7-5. Register Table (continued)

REG	23	22	21	20	19	18	17	16	15	14	13	12	11	10	9	8	7	6	5	4	3	2	1	0
	R/W	ADDRESS[6:0]							DATA [15:0]															
36	R/W	0	1	0	0	1	0	0	0	0	0	0	CHDIV_DISTB_EN	CHDIV_DISTA_EN	0	0	0	CHDIV_SEG_SEL			CHDIV_SEG3			
37	R/W	0	1	0	0	1	0	1	0	1	0	PLL_N_PRE	0	0	0	0	0	0	0	0	0	0	0	0
38	R/W	0	1	0	0	1	1	0	0	0	0	PLL_N												0
39	R/W	0	1	0	0	1	1	1	1	0	PFD_DLY						0	0	0	0	0	1	0	0
40	R/W	0	1	0	1	0	0	0	PLL_DEN[31:16]															
41	R/W	0	1	0	1	0	0	1	PLL_DEN[15:0]															
42	R/W	0	1	0	1	0	1	0	MASH_SEED[31:16]															
43	R/W	0	1	0	1	0	1	1	MASH_SEED[15:0]															
44	R/W	0	1	0	1	1	0	0	PLL_NUM[31:16]															
45	R/W	0	1	0	1	1	0	1	PLL_NUM[15:0]															
46	R/W	0	1	0	1	1	1	0	0	0	OUTA_POW						OUTB_PD	OUTA_PD	1	0	0	MASH_ORDER		
47	R/W	0	1	0	1	1	1	1	0	0	0	OUTA_MUX		0	0	0	1	1	OUTB_POW					
48	R/W	0	1	1	0	0	0	0	0	0	0	0	0	0	1	1	1	1	1	1	1	1	OUTB_MUX	
59	R/W	0	1	1	1	0	1	1	0	0	0	0	0	0	0	0	0	0	MUXOUT_HDRV	0	0	0	0	0
61	R/W	0	1	1	1	1	0	1	0	0	0	0	0	0	0	0	0	0	0	0	0	0	0	LD_TYPE
62	R/W	0	1	1	1	1	1	0	0	0	0	0	0	0	0	0	0	0	0	0	0	0	0	0
64	R/W	1	0	0	0	0	0	0	0	0	0	0	0	0	ACAL_FAST	FCAL_FAST	AJUMP_SIZE			1	FJUMP_SIZE			
68	R	1	0	0	0	1	0	0	0	0	0	0	0	rb_LD_VTUNE		0	rb_VCO_SEL			0	0	0	0	0
69	R	1	0	0	0	1	0	1	0	0	0	0	0	0	0	0	rb_VCO_CAPCTRL							
70	R	1	0	0	0	1	1	0	0	0	0	0	0	0	0	rb_VCO_DACISET								

7.6.1.1 Register Descriptions

表 7-5. R0 Register Field Descriptions

BIT	FIELD	TYPE	DEFAULT	DESCRIPTION
15:14		R/W		Program to Register Map default values
13	LD_EN	R/W	1	Lock detect enable 1: enable 0: disable
12:9		R/W		Program to Register Map default values
8:7	FCAL_HPFD_ADJ	R/W	0	Used for when PFD freq is high 3: PFD > 200 MHz 2: PFD > 150 MHz 1: PFD > 100 MHz 0: not used
6:5	FCAL_LPFD_ADJ	R/W	0	Used for when PFD freq is low 3: PFD < 2.5 MHz 2: 2.5 MHz ≤ PFD < 5 MHz 1: 5 MHz ≤ PFD < 10 MHz 0: PFD ≥ 10 MHz

Copyright © 2022 Texas Instruments Incorporated

表 7-5. R0 Register Field Descriptions (continued)

BIT	FIELD	TYPE	DEFAULT	DESCRIPTION
4	ACAL_EN	R/W	1	Enable amplitude calibration 1: enable (calibration algorithm will set VCO amplitude. For manual mode set register VCO_IDAC_OVR=1, and then set the VCO amplitude by register VCO_IDAC) 0: disable
3	FCAL_EN	R/W	1	Enable frequency calibration 1: enable (writing 1 to this register triggers the calibration sequence) 0: disable
2	MUXOUT_SEL	R/W	1	Signal at MUXOUT pin 1: Lock Detect (3.3 V if locked, 0 V if unlocked) 0: Readback (3.3-V digital output)
1	RESET	R/W	0	Reset Write with a value of 1 to reset device (this register will self-switch back to 0)
0	POWERDOWN	R/W	0	Powerdown whole device 1: power down 0: power up

表 7-6. R1 Register Field Descriptions

BIT	FIELD	TYPE	DEFAULT	DESCRIPTION
15:3		R/W		Program to Register Map default values
2:0	CAL_CLK_DIV	R/W	3	Divides down the OSCin signal for calibration clock Calibration Clock = OSCin / 2^CAL_CLK_DIV Set this value so that calibration clock is less than but as close to 200MHz as possible if fast calibration time is desired.

表 7-7. R2 Register Field Descriptions

BIT	FIELD	TYPE	DEFAULT	DESCRIPTION
15:0		R/W		Program to Register Map default values

表 7-8. R4 Register Field Descriptions

BIT	FIELD	TYPE	DEFAULT	DESCRIPTION
15:8	ACAL_CMP_DLY	R/W	25	VCO amplitude calibration delay. Lowering this value can speed calibration time. The guideline for this register is 2 x [ACAL_CMP_DLY value] x [calibration clock period] > 200ns. As described in CAL_CLK_DIV, the calibration clock is defined as OSCin / 2^CAL_CLK_DIV. For example, with the fastest calibration clock of 200MHz (OSCin=200MHz and CAL_CLK_DIV=0), the period is 5ns. So ACAL_CMP_DLY should be > 20. With the same derivation, an example of a OSCin=100MHz, ACAL_CMP_DLY should be > 10. This register is left at a default value of 25 if there is no need to shorten calibration time.
7:0		R/W		Program to Register Map default values

表 7-9. R7 Register Field Descriptions

BIT	FIELD	TYPE	DEFAULT	DESCRIPTION
15:0		R/W		Program to Register Map default values

表 7-10. R8 Register Field Descriptions

BIT	FIELD	TYPE	DEFAULT	DESCRIPTION
15:14		R/W		Program to Register Map default values

表 7-10. R8 Register Field Descriptions (continued)

BIT	FIELD	TYPE	DEFAULT	DESCRIPTION
13	VCO_IDAC_OVR	R/W	0	This is the override bit for VCO amplitude (or IDAC value). When this is enabled, the VCO amplitude calibration function (ACAL_EN) is not used. VCO_IDAC register can be programmed to set the amplitude. Keep the VCO_IDAC value within 250 and 450.
12:11		R/W		Program to Register Map default values
10	VCO_CAPCTRL_OVR	R/W	0	This is the override bit for VCO capacitor bank code (or CAPCTRL value). When this is enabled, the VCO frequency calibration function (FCAL_EN) is not used. the VCO_CAPCTRL register can be programmed to set the VCO frequency within the selected VCO core. The VCO core is selected by setting VCO_SEL_FORCE=1 and then selecting the core with VCO_SEL=1,2,3,4,5,6, or 7
9:0		R/W		Program to Register Map default values

表 7-11. R9 Register Field Descriptions

BIT	FIELD	TYPE	DEFAULT	DESCRIPTION
15:12		R/W		Program to Register Map default values
11	OSC_2X	R/W	0	Reference path doubler 1: enable 0: disable
10		R/W		Program to Register Map default values
9	REF_EN	R/W	1	Enable reference path 1: enable 0: disable
8:0		R/W		Program to Register Map default values

表 7-12. R10 Register Field Descriptions

BIT	FIELD	TYPE	DEFAULT	DESCRIPTION
15:12		R/W		Program to Register Map default values
11:7	MULT	R/W	1	Input signal path multiplier (input range from 40 - 70 MHz, output range from 180 - 250 MHz)
6:0		R/W		Program to Register Map default values

表 7-13. R11 Register Field Descriptions

BIT	FIELD	TYPE	DEFAULT	DESCRIPTION
15:12		R/W		Program to Register Map default values
11:4	PLL_R	R/W	1	R divider after multiplier and before PFD
3:0		R/W		Program to Register Map default values

表 7-14. R12 Register Field Descriptions

BIT	FIELD	TYPE	DEFAULT	DESCRIPTION
15:12		R/W		Program to Register Map default values
11:0	PLL_R_PRE	R/W	1	R divider after OSCin doubler and before multiplier

表 7-15. R13 Register Field Descriptions

BIT	FIELD	TYPE	DEFAULT	DESCRIPTION
15		R/W		Program to Register Map default values
14	CP_EN	R/W	1	Enable charge pump 1: enable 0: disable
13:2		R/W		Program to Register Map default values

Copyright © 2022 Texas Instruments Incorporated

表 7-15. R13 Register Field Descriptions (continued)

BIT	FIELD	TYPE	DEFAULT	DESCRIPTION
1:0	PFD_CTL	R/W	0	PFD mode 0: Dual PFD (default) 3: Single PFD (ONLY use if PFD freq is higher than 200MHz)

表 7-16. R14 Register Field Descriptions

BIT	FIELD	TYPE	DEFAULT	DESCRIPTION
15:12		R/W		Program to Register Map default values
11:7	CP_IDN	R/W	3	Charge pump current (DN) – must equal to charge pump current (UP). Can activate any combination of bits. <bit 4>: 1.25 mA <bit 3>: 2.5 mA <bit 2>: 0.625 mA <bit 1>: 0.312 mA <bit 0>: 0.156 mA
6:2	CP_IUP	R/W	3	Charge pump current (UP) – must equal to charge pump current (DN). Can activate any combination of bits. <bit 4>: 1.25 mA <bit 3>: 2.5 mA <bit 2>: 0.625 mA <bit 1>: 0.312 mA <bit 0>: 0.156 mA
1:0	CP_ICOARSE	R/W	1	Charge pump gain multiplier - multiplies charge pump current by a given factor: 3: multiply by 2.5 2: multiply by 1.5 1: multiply by 2 0: no multiplication For optimal accuracy of the lock detect circuit over temperature, it is recommended that only set this register to either 0 or 2.

表 7-17. R19 Register Field Descriptions

BIT	FIELD	TYPE	DEFAULT	DESCRIPTION
15:12		R/W		Program to Register Map default values
11:3	VCO_IDAC	R/W	300	This is the VCO amplitude (or IDAC value). When VCO_IDAC is overridden with VCO_IDAC_OVR=1, VCO amplitude calibration function (ACAL_EN) is not used. VCO_IDAC register can be programmed to set the amplitude. VCO_IDAC value must be kept within 250 and 450.
2:0		R/W		Program to Register Map default values

表 7-18. R20 Register Field Descriptions

BIT	FIELD	TYPE	DEFAULT	DESCRIPTION
15:9		R/W		Program to Register Map default values
8:0	ACAL_VCO_IDAC_STRT	R/W	300	This register is used to aid the VCO amplitude calibration function (ACAL_EN). By default the amplitude calibration function searches from the low end of VCO_IDAC until it reaches the target value. Like the VCO_IDAC, this must be kept within 250 and 450. This can be set to a value closer to the target value, then the amplitude calibration time can be shortened typically final VCO_IDAC is somewhere around 300.

表 7-19. R22 Register Field Descriptions

BIT	FIELD	TYPE	DEFAULT	DESCRIPTION
15:8		R/W		Program to Register Map default values

表 7-19. R22 Register Field Descriptions (continued)

BIT	FIELD	TYPE	DEFAULT	DESCRIPTION
7:0	VCO_CAPCTRL	R/W	0	This is the VCO capacitor bank code (or CAPCTRL value). When VCO_CAPCTRL is overridden with VCO_CAPCTRL_OVR=1, VCO frequency calibration function (FCAL_EN) is not used. VCO_CAPCTRL register can be programmed to set the frequency in that core. VCO_SEL_FORCE=1 has to be set and VCO_SEL to select the VCO core, then CAPCTRL values between 0 to 183 will produce frequencies within this core (0 being the highest frequency and 183 the lowest).

表 7-20. R23 Register Field Descriptions

BIT	FIELD	TYPE	DEFAULT	DESCRIPTION
15		R/W		Program to Register Map default values
14	FCAL_VCO_SEL_STRT	R/W	0	This is a register that aids the frequency calibration function. When this is enabled, a VCO core can be selected for the frequency calibration to start at, set by register VCO_SEL. By default the frequency calibration starts from VCO core 7 and works its way down. If you want for example to lock to a frequency in VCO core 1, you can set VCO_SEL to 2, so the calibration will start at VCO core 2 and end at target frequency at VCO core 1 faster.
13:11	VCO_SEL	R/W	1	This is the register used to select VCO cores. It works for VCO_CAPCTRL when VCO_CAPCTRL_OVR=1 and VCO_SEL_FORCE=1. It also aids the frequency calibration function with FCAL_VCO_SEL_STRT.
10	VCO_SEL_FORCE	R/W	0	This register works to force selection of VCO cores. If VCO_CAPTRL_OVR=1 and this register is enabled, you can select the VCO core to use with VCO_SEL.
9:0		R/W		Program to Register Map default values

表 7-21. R24 Register Field Descriptions

BIT	FIELD	TYPE	DEFAULT	DESCRIPTION
15:0		R/W		Program to default

表 7-22. R25 Register Field Descriptions

BIT	FIELD	TYPE	DEFAULT	DESCRIPTION
15:0		R/W		Program to Register Map default values

表 7-23. R28 Register Field Descriptions

BIT	FIELD	TYPE	DEFAULT	DESCRIPTION
15:0		R/W		Program to Register Map default values

表 7-24. R29 Register Field Descriptions

BIT	FIELD	TYPE	DEFAULT	DESCRIPTION
15:0		R/W		Program to Register Map default values

表 7-25. R30 Register Field Descriptions

BIT	FIELD	TYPE	DEFAULT	DESCRIPTION
15:11		R/W		Program to Register Map default values
10	MASH_DITHER	R/W	0	MASH dithering: toggle on/off to randomize
9:8		R/W		Program to Register Map default values
7:6	VTUNE_ADJ	R/W		Change this register field according to the VCO frequency 0: f_{VCO} < 6500 MHz 3: f_{VCO} ≥ 6500 MHz
5:1		R/W		Program to Register Map default values

Copyright © 2022 Texas Instruments Incorporated

表 7-25. R30 Register Field Descriptions (continued)

BIT	FIELD	TYPE	DEFAULT	DESCRIPTION
0	VCO_2X_EN	R/W	0	Enable VCO doubler 1: enable 0: disable

表 7-26. R31 Register Field Descriptions

BIT	FIELD	TYPE	DEFAULT	DESCRIPTION
15:11		R/W		Program to Register Map default values
10	VCO_DISTB_PD	R/W	1	Power down buffer between VCO and output B 1: power down 0: power up
9	VCO_DISTA_PD	R/W	0	Power down buffer between VCO and output A 1: power down 0: power up
8		R/W		Program to Register Map default values
7	CHDIV_DIST_PD	R/W	0	Power down buffer between VCO and channel divider
6:0		R/W		Program to Register Map default values

表 7-27. R32 Register Field Descriptions

BIT	FIELD	TYPE	DEFAULT	DESCRIPTION
15:0		R/W		Program to Register Map default values

表 7-28. R33 Register Field Descriptions

BIT	FIELD	TYPE	DEFAULT	DESCRIPTION
15:0		R/W		Program to Register Map default values

表 7-29. R34 Register Field Descriptions

BIT	FIELD	TYPE	DEFAULT	DESCRIPTION
15:6		R/W		Program to Register Map default values
5	CHDIV_EN	R/W	1	Enable entire channel divider 1: enable 0: power down
4:0		R/W		Program to Register Map default values

表 7-30. R35 Register Field Descriptions

BIT	FIELD	TYPE	DEFAULT	DESCRIPTION
15:13		R/W		Program to Register Map default values
12:9	CHDIV_SEG2	R/W	1	Channel divider segment 2 8: divide-by-8 4: divide-by-6 2: divide-by-4 1: divide-by-2 0: PD
8	CHDIV_SEG3_EN	R/W	0	Channel divider segment 3 1: enable 0: power down (power down if not needed)
7	CHDIV_SEG2_EN	R/W	0	Channel divider segment 2 1: enable 0: power down (power down if not needed)
6:3		R/W		Program to Register Map default values
2	CHDIV_SEG1	R/W	1	Channel divider segment 1 1: divide-by-3 0: divide-by-2

Copyright © 2022 Texas Instruments Incorporated

表 7-30. R35 Register Field Descriptions (continued)

BIT	FIELD	TYPE	DEFAULT	DESCRIPTION
1	CHDIV_SEG1_EN	R/W	0	Channel divider segment 1 1: enable 0: power down (power down if not needed)
0		R/W		Program to Register Map default values

表 7-31. R36 Register Field Descriptions

BIT	FIELD	TYPE	DEFAULT	DESCRIPTION
15:12		R/W		Program to Register Map default values
11	CHDIV_DISTB_EN	R/W	0	Enable buffer between channel divider and output B 1: enable 0: disable
10	CHDIV_DISTA_EN	R/W	1	Enable buffer between channel divider and output A 1: enable 0: disable
9:7		R/W		Program to Register Map default values
6:4	CHDIV_SEG_SEL	R/W	1	Channel divider segment select 4: includes channel divider segment 1,2 and 3 2: includes channel divider segment 1 and 2 1: includes channel divider segment 1 0: PD
3:0	CHDIV_SEG3	R/W	1	Channel divider segment 3 8: divide-by-8 4: divide-by-6 2: divide-by-4 1: divide-by-2 0: PD

表 7-32. R37 Register Field Descriptions

BIT	FIELD	TYPE	DEFAULT	DESCRIPTION
15:13		R/W		Program to Register Map default values
12	PLL_N_PRE	R/W	0	N-divider pre-scalar 1: divide-by-4 0: divide-by-2
11:0		R/W		Program to Register Map default values

表 7-33. R38 Register Field Descriptions

BIT	FIELD	TYPE	DEFAULT	DESCRIPTION
15:13		R/W		Program to Register Map default values
12:1	PLL_N	R/W	27	Integer part of N-divider
0		R/W		Program to Register Map default values

表 7-34. R39 Register Field Descriptions

BIT	FIELD	TYPE	DEFAULT	DESCRIPTION
15:14		R/W		Program to Register Map default values
13:8	PFD_DLY	R/W	2	PFD Delay 32: Not used 16: 16 clock cycle delay 8: 12 clock cycle delay 4: 8 clock cycle delay 2: 6 clock cycle delay 1: 4 clock cycle delay
7:0		R/W		Program to Register Map default values

Copyright © 2022 Texas Instruments Incorporated

表 7-35. R40 Register Field Descriptions

BIT	FIELD	TYPE	DEFAULT	DESCRIPTION
15:0	PLL_DEN[31:16]	R/W	1000	Denominator MSB of N-divider fraction

表 7-36. R41 Register Field Descriptions

BIT	FIELD	TYPE	DEFAULT	DESCRIPTION
15:0	PLL_DEN[15:0]	R/W	1000	Denominator LSB of N-divider fraction

表 7-37. R42 Register Field Descriptions

BIT	FIELD	TYPE	DEFAULT	DESCRIPTION
15:0	MASH_SEED[31:16]	R/W	0	MASH seed MSB

表 7-38. R43 Register Field Descriptions

BIT	FIELD	TYPE	DEFAULT	DESCRIPTION
15:0	MASH_SEED[15:0]	R/W	0	MASH seed LSB

表 7-39. R44 Register Field Descriptions

BIT	FIELD	TYPE	DEFAULT	DESCRIPTION
15:0	PLL_NUM[31:16]	R/W	0	Numerator MSB of N-divider fraction

表 7-40. R45 Register Field Descriptions

BIT	FIELD	TYPE	DEFAULT	DESCRIPTION
15:0	PLL_NUM[15:0]	R/W	0	Numerator LSB of N-divider fraction

表 7-41. R46 Register Field Descriptions

BIT	FIELD	TYPE	DEFAULT	DESCRIPTION
15		R/W		Program to Register Map default values
13:8	OUTA_POW	R/W	15	Output buffer A power increase power from 0 to 31 extra boost from 48 to 63
7	OUTB_PD	R/W	1	Output buffer B power down 1: power down 0: power up
6	OUTA_PD	R/W	0	Output buffer A power down 1: power down 0: power up
5:3		R/W		Program to Register Map default values
2:0	MASH_ORDER	R/W	3	Sigma-delta modulator order 4: fourth order 3: third order 2: second order 1: first order 0: integer mode

表 7-42. R47 Register Field Descriptions

BIT	FIELD	TYPE	DEFAULT	DESCRIPTION
15:13		R/W		Program to Register Map default values
12:11	OUTA_MUX	R/W	0	Selects signal to the output buffer 2,3: reserved 1: Selects output from VCO 0: Selects the channel divider output
10:6		R/W		Program to Register Map default values

Copyright © 2022 Texas Instruments Incorporated

表 7-42. R47 Register Field Descriptions (continued)

BIT	FIELD	TYPE	DEFAULT	DESCRIPTION
5:0	OUTB_POW	R/W	0	Output buffer B power increase power from 0 to 31 extra boost from 48 to 63

表 7-43. R48 Register Field Descriptions

BIT	FIELD	TYPE	DEFAULT	DESCRIPTION
15:2		R/W		Program to Register Map default values
1:0	OUTB_MUX	R/W	0	Selects signal to the output buffer 2,3: reserved 1: Selects output from VCO 0: Selects the channel divider output

表 7-44. R59 Register Field Descriptions

BIT	FIELD	TYPE	DEFAULT	DESCRIPTION
15:6		R/W		Program to Register Map default values
5	MUXOUT_HDRV	R/W	0	This bit enables higher current output (approximately 3 mA) at MUXOUT pin if value is 1.
4:0		R/W		Program to Register Map default values

表 7-45. R61 Register Field Descriptions

BIT	FIELD	TYPE	DEFAULT	DESCRIPTION
15:1		R/W		Program to Register Map default values
0	LD_TYPE	R/W	1	To use lock detect, set MUXOUT_SEL=1. Use this register to select type of lock detect: 0: Calibration status detect (this indicates if the auto-calibration process has completed successfully and will output from MUXout pin a logic HIGH when successful). 1: vtune detect (this checks if vtune is in the expected range of voltages and outputs from MUXout pin a logic HIGH if device is locked and LOW if unlocked).

表 7-46. R62 Register Field Descriptions

BIT	FIELD	TYPE	DEFAULT	DESCRIPTION
15:0		R/W		Program to Register Map default values

表 7-47. R64 Register Field Descriptions

BIT	FIELD	TYPE	DEFAULT	DESCRIPTION
15:10		R/W		Program to Register Map default values
9	ACAL_FAST	R/W	0	Enable fast amplitude calibration 1: enable 0: disable
8	FCAL_FAST	R/W	0	Enable fast frequency calibration 1: enable 0: disable
7:5	AJUMP_SIZE	R/W	3	When ACAL_FAST=1, use this register to select the jump increment
4		R/W		Program to Register Map default values
3:0	FJUMP_SIZE	R/W	15	When FCAL_FAST=1, use this register to select the jump increment

Copyright © 2022 Texas Instruments Incorporated

表 7-48. R68 Register Field Descriptions

BIT	FIELD	TYPE	DEFAULT	DESCRIPTION
10:9	rb_LD_VTUNE	R	–	Readback of Vtune detect (LD_TYPE = 1). 0: Unlocked 1: Invalid 2: Locked 3: Unlocked
7:5	rb_VCO_SEL	R	–	Reads back the actual VCO that the calibration has selected. 1: VCO1 2: VCO2 …… 7: VCO7

表 7-49. R69 Register Field Descriptions

BIT	FIELD	TYPE	DEFAULT	DESCRIPTION
7:0	rb_VCO_CAPCTRL	R	–	Reads back the actual CAPCTRL value that the VCO calibration has chosen.

表 7-50. R70 Register Field Descriptions

BIT	FIELD	TYPE	DEFAULT	DESCRIPTION
8:0	rb_VCO_DACISET	R	-	Reads back the actual DACISET value that the VCO calibration has chosen.

8 Application and Implementation

注

以下のアプリケーション情報は、TI の製品仕様に含まれるものではなく、TI ではその正確性または完全性を保証いたしません。個々の目的に対する製品の適合性については、お客様の責任で判断していただくことになります。お客様は自身の設計実装を検証しテストすることで、システムの機能を確認する必要があります。

8.1 Application Information

8.1.1 Optimization of Spurs

8.1.1.1 Understanding Spurs by Offsets

The first step in optimizing spurs is to be able to identify them by offset. 図 8-1 gives a good example that can be used to isolate the following spur types.

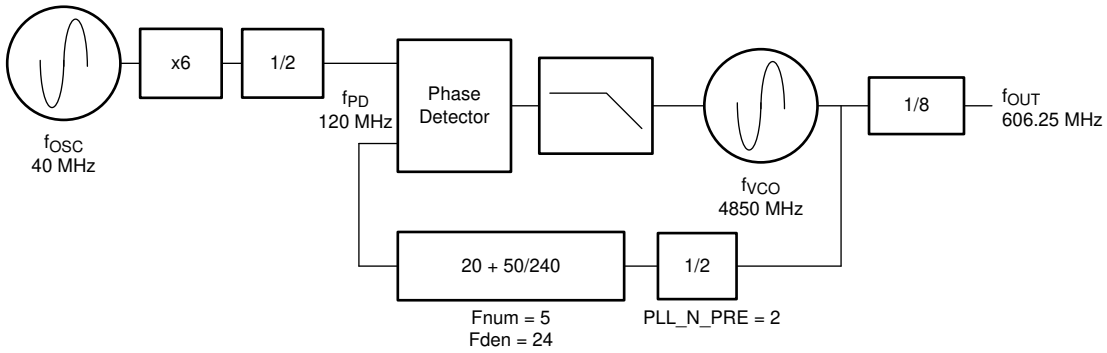

図 8-1. Spur Offset Frequency Example

Based on 図 8-1, the most common spurs can be calculated from the frequencies. Note that the **%** is the modulus operator and is meant to mean the difference to the closest integer multiple. Some examples of how to use this operator are: 36 % 11 = 3, 1000.1 % 50 = 0.1, and 5023.7 % 122.88 = 14.38. Applying this concept, the spurs at various offsets can be identified from 図 8-1.

表 8-1. Spur Definition Table

SPUR TYPE	OFFSET	OFFSET IN 図 8-1	COMMENTS
OSCin	f_{OSC}	40 MHz	This spur occurs at harmonics of the OSCin frequency.
Fpd	f_{PD}	120 MHz	The phase detector spur has many possible mechanisms and occurs at multiples of the phase detector frequency.
f_{OUT} % f_{OSC}	f_{OUT} % f_{OSC}	606.25 % 40 = 6.25 MHz	This spur is caused by mixing between the output and input frequencies.
f_{VCO}% f_{OSC}	f_{VCO} % f_{OSC}	4850 % 40 = 10 MHz	This spur is caused by mixing between the VCO and input frequencies.
f_{VCO}% f_{PD}	f_{VCO} % f_{PD}	4850 % 120 = 50 MHz	This spur would be the same offset as the integer boundary spur if PLL_N_PRE=1, but can be different if this value is greater than one.
Integer Boundary	f_{PD} *(Fnum%Fden)/ Fden)	120 × (5%24)/24 = 25 MHz	This is a single spur
Primary Fractional	f_{PD} / Fden	120 / 24 = 5 MHz	The primary fractional

Copyright © 2022 Texas Instruments Incorporated

表 8-1. Spur Definition Table (continued)

SPUR TYPE	OFFSET	OFFSET IN 図 8-1	COMMENTS
Sub-Fractional	f_{PD} / Fden / k k=2,3, or 6	First Order Modulator: None 2nd Order Modulator: 120/24/2 = 2.5 MHz 3rd Order Modulator: 120/24/6 = 0.83333 MHz 4th Order Modulator: 120/24/12 = 0.416666 MHz	To Calculate k: 1st Order Modulator: k=1 2nd Order Modulator: k=1 if Fden is odd, k=2 if Fden is even 3rd Order Modulator: k=1 if Fden not divisible by 2 or 3, k=2 if Fden divisible by 2 not 3, k=3 if Fden divisible by 3 but not 2, Fden = 6 if Fden divisible by 2 and 3 4th Order Modulator: k=1 if Fden not divisible by 2 or 3. k=3 if Fden divisible by 3 but not 2, k=4 if Fden divisible by 2 but not 3, k=12 if Fden divisible by 2 and 3 Sub-Fractional Spurs exist if k>1

In the case that two different spur types occur at the same offset, either name would be correct. Some may name this by the more dominant cause, while others would simply name by choosing the name that is near the top of 表 8-1.

8.1.1.2 Spur Mitigation Techniques

Once the spur is identified and understood, there will likely be a desire to try to minimize them. Spurs and Mitigation Techniques gives some common methods.

Spurs and Mitigation Techniques

SPUR TYPE	WAYS TO REDUCE	TRADE-OFF
OSCin	1. Use PLL_N_PRE = 2 2. Use an OSCin signal with low amplitude and high slew rate (like LVDS).	
Phase Detector	1. Decrease PFD_DLY 2. To pin 11, use a series ferrite bead and a shunt 0.1-µF capacitor.	
f_{OUT} % f_{OSC}	Use an OSCin signal with low amplitude and high slew rate (like LVDS)	
f_{VCO}% f_{OSC}	1. To pin 7, use a series ferrite bead and a shunt 0.1-µF capacitor. 2. Increase the offset of this spur by shifting the VCO frequency 3. If multiple VCO frequencies are possible that yield the same spur offset, choose the higher VCO frequency. .	
f_{VCO}% f_{PD}	Avoid this spur by shifting the phase detector frequency (with the programmable input multiplier or R divider) or shifting the VCO frequency. This spur is better at higher VCO frequency.	
Integer Boundary	**Methods for PLL Dominated Spurs** 1. Avoid the worst case VCO frequencies if possible. 2. Strategically choose which VCO core to use if possible. 3. Ensure good slew rate and signal integrity at the OSCin pin 4. Reduce the loop bandwidth or add more filter poles for out of band spurs 5. Experiment with modulator order and PFD_DLY	Reducing the loop bandwidth may degrade the total integrated noise if the bandwidth is too narrow.
	Methods for VCO Dominated Spurs 1. Avoid the worst case VCO frequencies if possible. 2. Reduce Phase Detector Frequency 3. Ensure good slew rate and signal integrity at the OSCin pin 4. Make the impedance looking outwards from the OSCin pin close to 50 Ω.	Reducing the phase detector may degrade the phase noise and also reduce the capacitance at the Vtune pin.

Spurs and Mitigation Techniques (continued)

SPUR TYPE	WAYS TO REDUCE	TRADE-OFF
Primary Fractional	1. Decrease Loop Bandwidth 2. Change Modulator Order 3. Use Larger Unequivalent Fractions	Decreasing the loop bandwidth too much may degrade in-band phase noise. Also, larger unequivalent fractions only sometimes work
Sub-Fractional	1. Use Dithering 2. Use MASH seed 3. Use Larger Equivalent Fractions 4. Use Larger Unequivalent Fractions 5. Reduce Modulator Order 6. Eliminate factors of 2 or 3 in denominator (see *AN-1879 Fractional N Frequency Synthesis* (SNAA062)	Dithering and larger fractions may increase phase noise. MASH_SEED can be set between values 0 and Fden, which changes the sub-fractional spur behavior. This is a deterministic relationship and there will be one seed value that will give best result for this spur.

8.1.2 Configuring the Input Signal Path

The input path is considered the portion of the device between the OSCin pin and the phase detector, which includes the input buffer, R dividers, and programmable multipliers. The way that these are configured can have a large impact on phase noise and fractional spurs.

8.1.2.1 Input Signal Noise Scaling

The input signal noise scales by 20 × log(output frequency / input signal frequency), so always check this to see if the noise of the input signal scaled to the output frequency is close to the PLL in-band noise level. When that happens, the input signal noise is the dominant noise source, not the PLL noise floor.

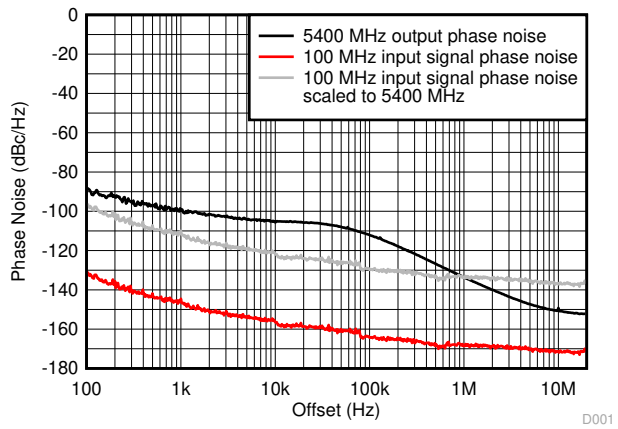

図 8-2. Phase Noise of 5.4-GHz Output With Low-Noise Input Signal

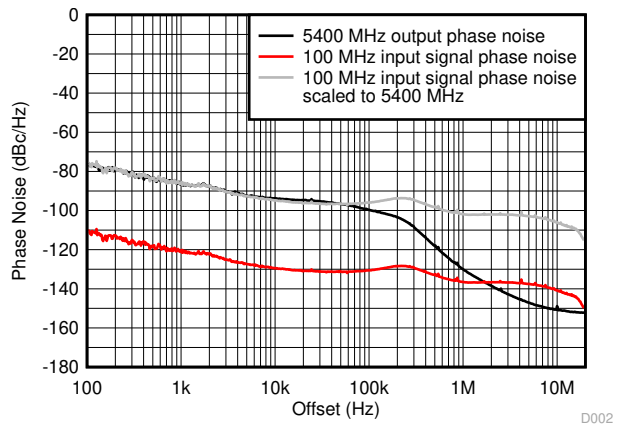

図 8-3. Phase Noise of 5.4-GHz Output With High-Noise Input Signal

8.1.3 Input Pin Configuration

The OSCinM and OSCinP can be used to support both a single-ended or differential clock. In either configuration, the termination on both sides should match for best common-mode noise rejection. The slew rate and signal integrity of this signal can have an impact on both the phase noise and fractional spurs. Standard clocking types, LVDS, LVPECL, HCSL, and CMOS can all be used.

8.1.4 Using the OSCin Doubler

The lowest PLL flat noise is achieved with a low-noise 200-MHz input signal. If only a low-noise input signal with lower frequency is available (for example a 100-MHz source), you can use the low noise OSCin doubler to attain 200-MHz phase detector frequency. Because PLL_flat = PLL_FOM + 20 × log(Fvco/Fpd) + 10 × log(Fpd / 1Hz), doubling Fpd theoretically gets –6 dB from the 20 × log(Fvco/Fpd) component, +3 dB from the 10 × log(Fpd / 1Hz) component, and cumulatively a –3-dB improvement.

Copyright © 2022 Texas Instruments Incorporated

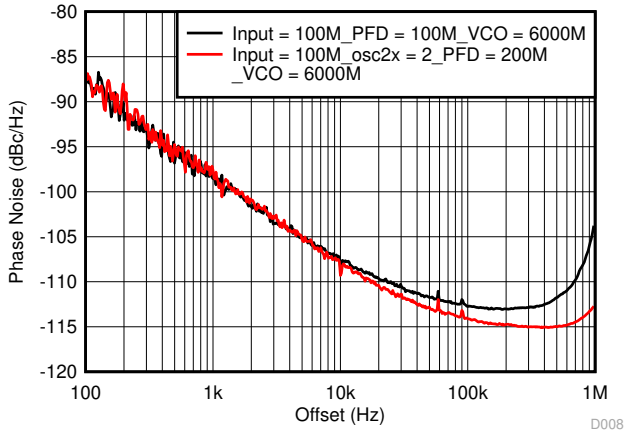

図 8-4. 100-MHz Input With OSCin Doubler

8.1.5 Using the Input Signal Path Components

The ideal input is a low-noise, 200-MHz (or multiples of it) signal and 200-MHz phase detector frequency (highest dual PFD frequency). However, if spur mechanisms are understood, certain combinations of the R-divider and Multiplier can help. Refer to the *Optimization of Spurs* section for understanding spur types and their mechanisms first, then try this section for these specific spurs.

8.1.5.1 Moving Phase Detector Frequency

Engaging the multiplier in the reference path allows more flexibility in setting the PFD frequency. One example use case of this is if Fvco % Fpd is the dominant spur. This method can move the PFD frequency and thus the Fvco % Fpd.

Example: Fvco = 3720.12 MHz, Fosc = 300 MHz, Pre-R divider = 5, Fpd = 60 MHz, Fvco%Fosc = 120.12 MHz (Far out), Fvco%Fpd = 120 kHz (dominant). There is a Fvco%Fpd spur at 120 kHz (refer to 図 8-5).

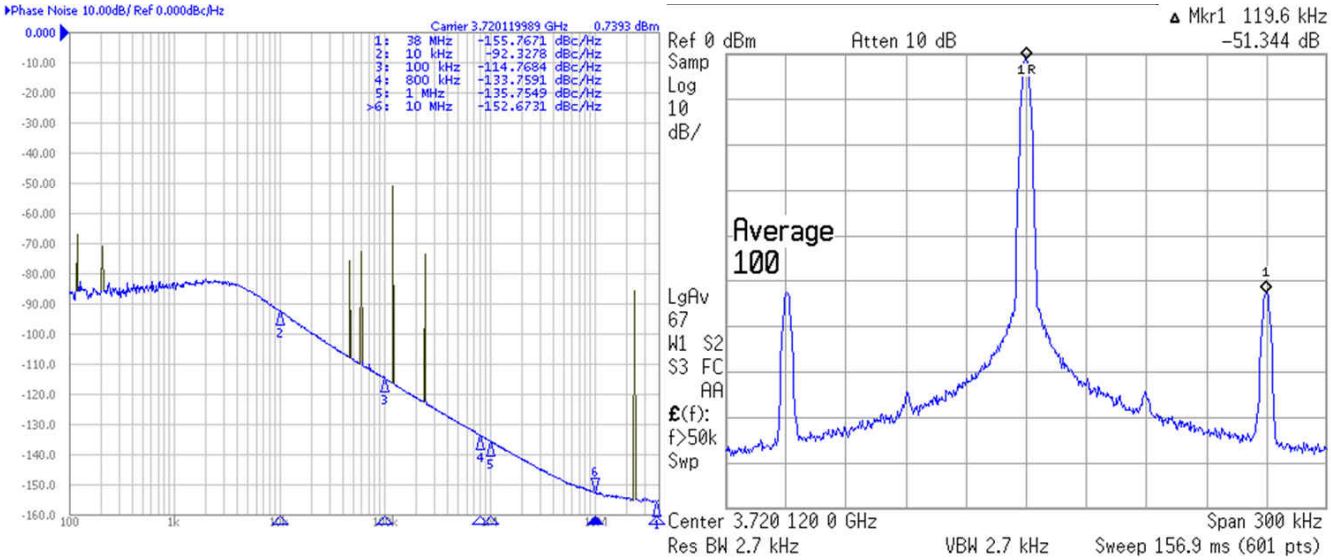

図 8-5. Fvco % Fpd Spur

Then second case, using divider and multiplier, is Fpd = 53.57 MHz away from 120-kHz spur. Fvco = 3720.12MHz, Fosc = 300MHz, Pre-R divider = 7, Multiplier = 5, Post-R divider = 4, Fpd = 53.57 MHz, Fvco%Fosc = 120.12 MHz (Far out). Fvco % Fpd = 23.79 MHz (far out). There is a 20–dB reduction for the Fvco % Fpd spur at 120 kHz (refer to 図 8-6).

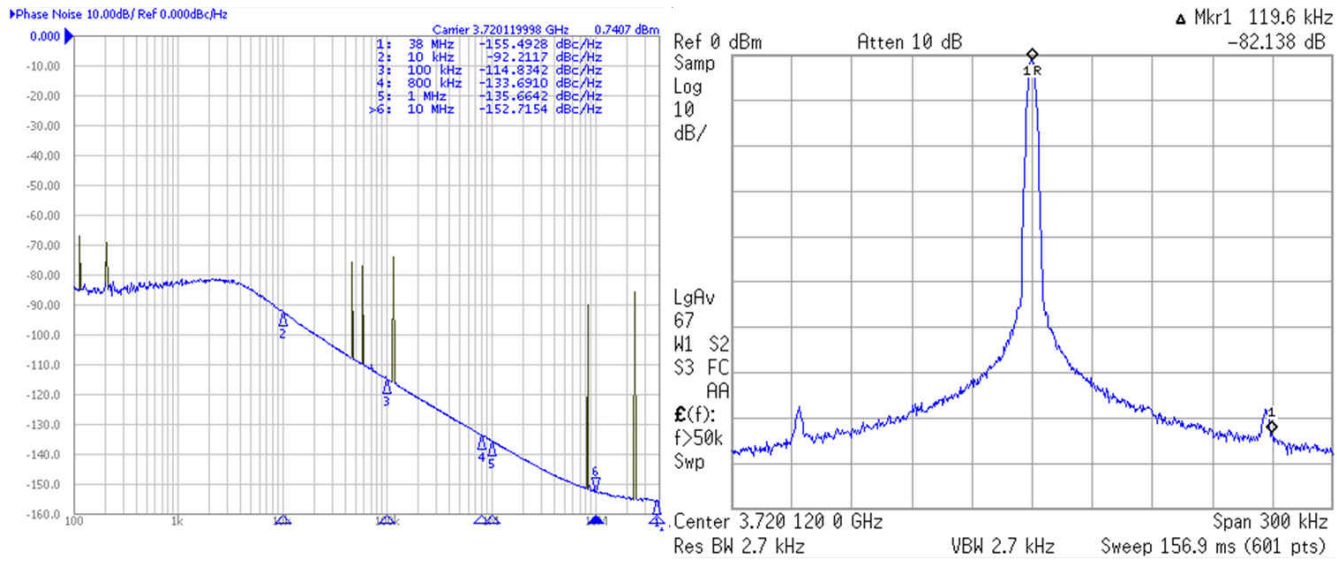

図 8-6. Moving Away From Fvco % Fpd Spur

8.1.5.2 Multiplying and Dividing by the Same Value

Although it may not seem like the first thing to try, the Fvco%Fosc and Fout%Fosc spur can sometimes be improved engaging the OSC_2X bit and then dividing by 2. Although this gives the same phase detector frequency, the spur can be improved.

8.1.6 Designing for Output Power

If there is a desired frequency for highest power, use an inductor pullup and design for the value so that the resonance is at that frequency. Use the formula SRF = 1 / (2π× sqrt[L × C]).

Example: C = 1.4 pF (characteristic). If maximum power is targeted at 1 GHz, L = 18 nH. If maximum power is targeted at 3.3 GHz, L = 1.6 nH

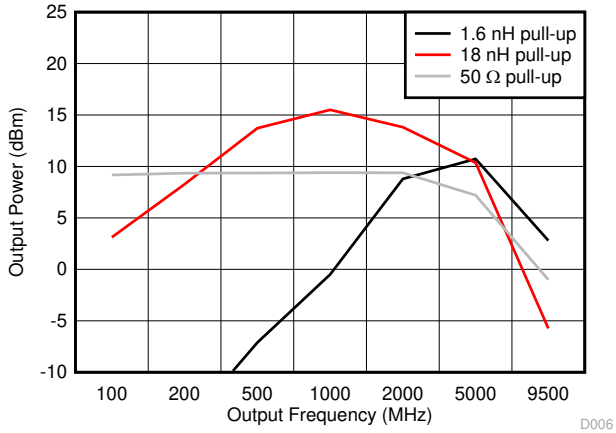

図 8-7. Output Power vs Pullup Type

8.1.7 Current Consumption Management

The starting point is the typical total current consumption of 250 mA: 100-MHz input frequency, OSCin doubler bypassed, Pre-R divider bypassed, multiplier bypassed, post-R divider bypassed, 100-MHz phase detector frequency, 0.468-mA charge pump current, channel divider off, one output on, 6000-MHz output frequency, 50-Ω output pullup, 0-dBm output power (differential). To understand current consumption changes due to engaging different functional blocks , refer to 表 8-2.

Copyright © 2022 Texas Instruments Incorporated

表 8-2. Typical Current Consumption Impact By Function

ACTION	STEPS	PROGRAMMING	INCREASE IN CURRENT (mA)
Use input signal path	Enable OSCin doubler	OSC_2X = 1	7
	Enable multiplier	MULT = 3,4,5, or 6	10
Add an output	Route VCO to output B	VCO_DISTB_PD = 0	8
	Enable output B buffer	OUTB_PD = 0	54
Increase output power from 0 to +10dBm (differential)	Set highest output buffer current	OUTA_POW = 63	53
Use channel divider	Route channel divider to output	CHDIV_DISTA_EN = 1	5
	Enable channel divider	CHDIV_EN = 1	18
	Enable chdiv_seg1	CHDIV_SEG1_EN = 1	2
	Enable chdiv_seg2	CHDIV_SEG2_EN = 1	5
	Enable chdiv_seg3	CHDIV_SEG3_EN = 1	5
Using VCO doubler	Enable VCO doubler	VCO2X_EN	16

8.1.8 Decreasing Lock Time

A calibration time of 590 µs typically to lock to 7-GHz VCO can be achieved with default settings as specified in the *Electrical Characteristics* table. There are several registers that can be programmed to speed up this time. Lock time consists of the calibration time (time required to calibrate the VCO to the correct frequency range) plus the analog settling time (time lock the PLL in phase and frequency). For fast calibration set registers FCAL_FAST = 1 and ACAL_FAST = 1. Also set the calibration clock frequency [input reference frequency] / 2^CAL_CLK_DIV) to 200 MHz. The 20-µs range lock time can be achieved if the amplitude comparator delay is low, set by register ACAL_CMP_DLY (5 in this example). If this is too low there is not enough time to make the decision of VCO amplitude to use and may result in non-optimal phase noise. The other approach is to turn off amplitude calibration with ACAL_EN=0, then manually choose the amplitude with VCO_IDAC (350 for example). This will also result in 20-µs range calibration time. There are many other registers that can aid calibration time, for example ACAL_VCO_IDAC_STRT lets the user choose what VCO amplitude to start with during amplitude calibration. Setting this value to around 350 will give faster times because it is close to the final amplitude for most final frequencies. FCAL_VCO_SEL_START allows you to choose the VCO core to start with for the calibration instead of starting from core 7 by default. If you know you are locking to a frequency around VCO core 1, you can start from VCO 2 by setting VCO_SEL=2, which should give faster lock times. Go to the *Register Maps* section for detailed information of these registers and their related registers. For fast analog settling time, design loop filter for very wide loop bandwidth (MHz range).

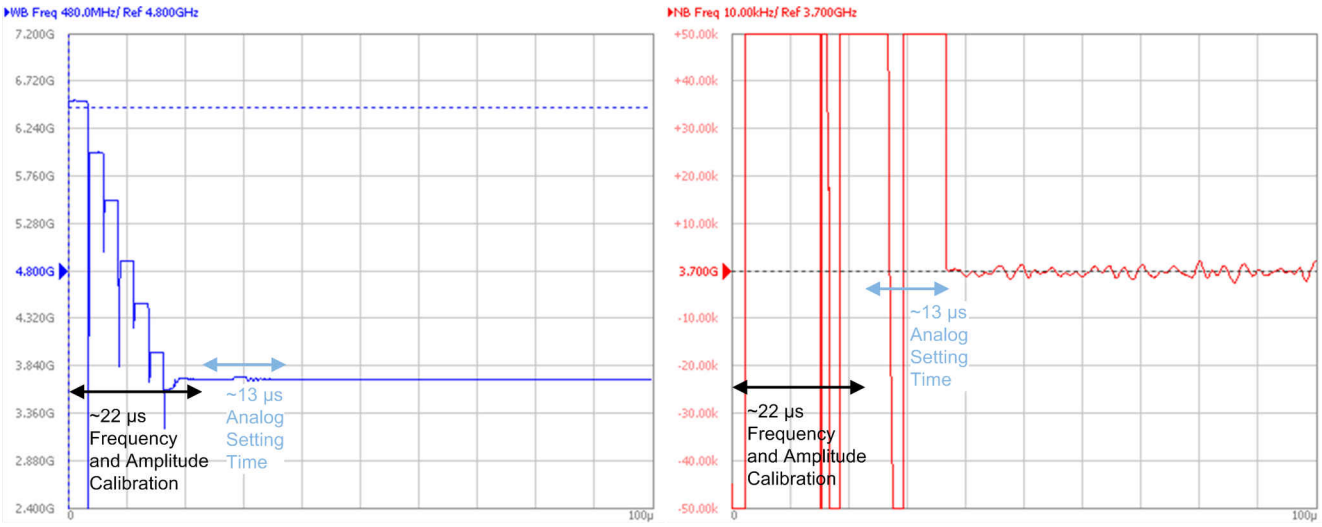

図 8-8. Lock Time Screenshot

The calibration example as shown in 図 8-8 sweeps from the top of the VCO frequency range to the bottom. This example does a calibration to lock at 3.7 GHz (which is longest lock time scenario). For the left screenshot (Wideband Frequency view), see the sweeping from top to bottom of the VCO range. On the right screenshot (Narrowband Frequency view), see the analog settling time to the precise target frequency.

8.1.9 Modeling and Understanding PLL FOM and Flicker Noise

Follow these recommended settings to design for wide loop bandwidth and extract FOM and flicker noise. The flat model is the PLL noise floor modeled by: PLL_flat = PLL_FOM + 20 × log(Fvco/Fpd) + 10 × log(Fpd / 1 Hz). The flicker noise (also known as 1/f noise) which changes by –10dB / decade, is modeled by: PLL_flicker (offset) = PLL_flicker_Norm + 20 × log(Fvco / 1 GHz) – 10 × log(offset / 10k Hz). The cumulative model is the addition of both components: PLL_Noise = 10*log(10PLL_Flat / 10 + 10PLL_flicker / 10). This is adjusted to fit the measured data to extract the PLL_FOM and PLL_flicker_Norm spec numbers.

表 8-3. Wide Loop Filter Design

PARAMETER	VALUE
PFD (MHz)	200
Charge pump (mA)	12
VCO frequency (MHz)	5400
Loop bandwidth (kHz)	2000
Phase margin (degrees)	30
Gamma	1.4
Loop filter (2nd order)	
C1 (nF)	0.01
C2 (nF)	0.022
R2 (kΩ)	4.7

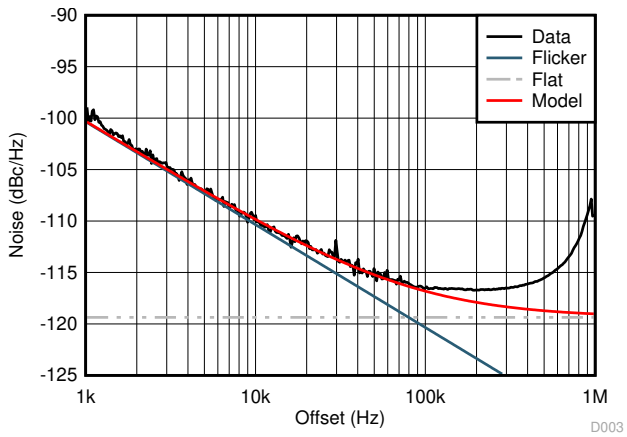

図 8-9. FOM and Flicker Noise Modeling

8.1.10 External Loop Filter

The LMX2592 requires an external loop filter that is application-specific and can be configured by the PLLatinum ™ simulation tool found here. For the LMX2592, it matters what impedance is seen from the Vtune pin looking outwards. This impedance is dominated by the component C3 for a third order filter or C1 for a second order filter. If there is at least 3.3 nF for the capacitance that is shunt with this pin, the VCO phase noise will be close to the best it can be. If there is less, the VCO phase noise in the 100-kHz to 1-MHz region will degrade. This capacitor should be placed close to the Vtune pin.

Copyright © 2022 Texas Instruments Incorporated

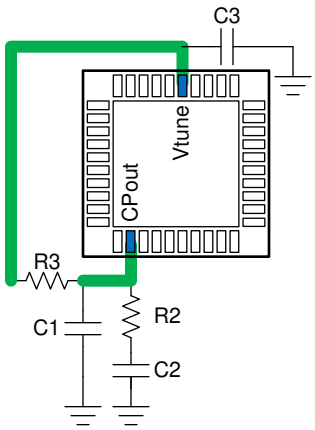

図 8-10. External Loop Filter

8.2 Typical Application

8.2.1 Design for Low Jitter

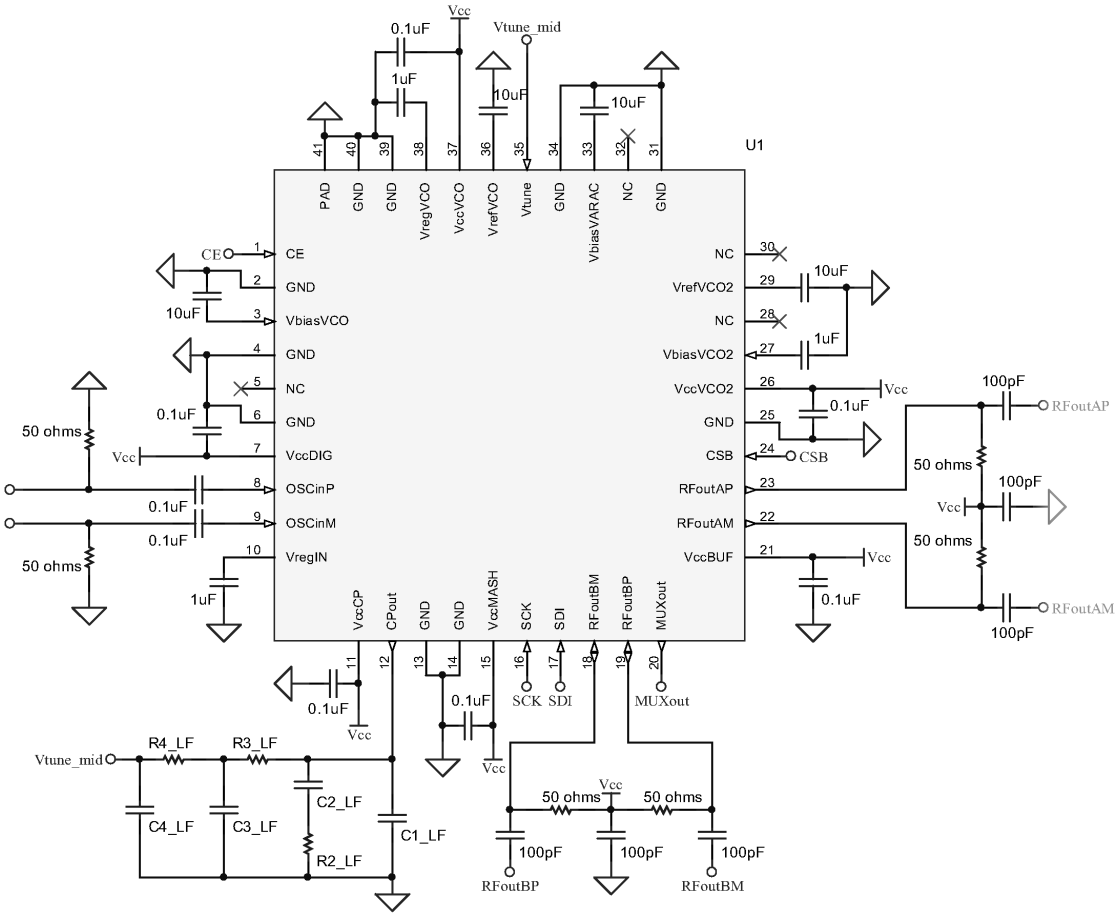

Copyright © 2016, Texas Instruments Incorporated

図 8-11. Typical Application Schematic

8.2.1.1 Design Requirements

Refer to the design parameters shown in 表 8-4.

表 8-4. Design Information

PARAMETER	VALUE
PFD (MHz)	200
Charge pump (mA)	20
VCO frequency (MHz)	6000
Loop bandwidth (kHz)	210
Phase margin (degrees)	70
Gamma	3.8
Loop filter (2nd order)	
C1 (nF)	4.7
C2 (nF)	100
R2 (Ω)	68

8.2.1.2 Detailed Design Procedure

The integration of phase noise over a certain bandwidth (jitter) is an performance specification that translates to signal-to-noise ratio. Phase noise inside the loop bandwidth is dominated by the PLL, while the phase noise outside the loop bandwidth is dominated by the VCO. As a rule of thumb, jitter is lowest if loop bandwidth is designed to the point where the two intersect. A higher phase margin loop filter design has less peaking at the loop bandwidth and thus lower jitter. The tradeoff with this as longer lock times and spurs should be considered in design as well.

8.2.1.3 Application Curve

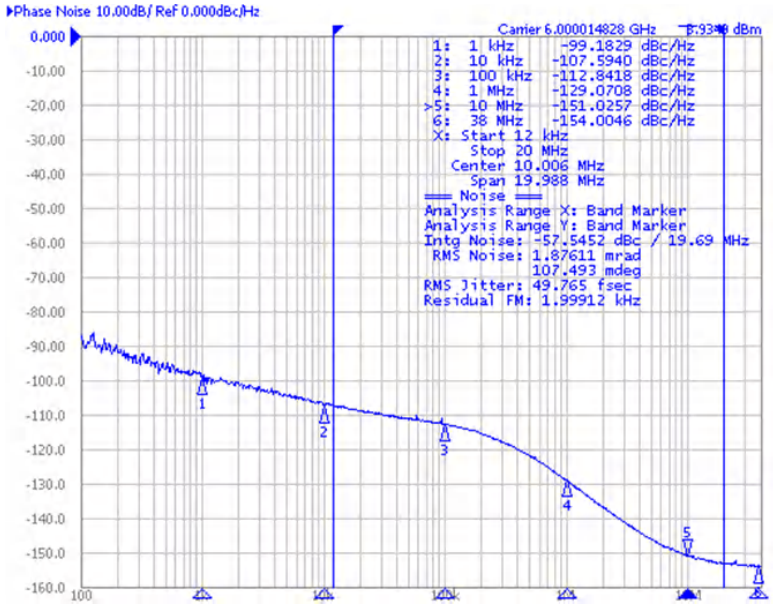

図 8-12. Typical Jitter

8.3 Power Supply Recommendations

TI recommends placing 100-nF spurs close to each of the power supply pins. If fractional spurs are a large concern, using a ferrite bead to each of these power supply pins can reduce spurs to a small degree.

Copyright © 2022 Texas Instruments Incorporated

8.4 Layout

8.4.1 Layout Guidelines

See EVM instructions for details. In general, the layout guidelines are similar to most other PLL devices. The followings are some outstanding guidelines.

- Place output pull up components close to the pin.
- Place capacitors close to the pins.
- Make sure input signal trace is well matched.
- Do not route any traces that carrying switching signal close to the charge pump traces and external VCO.

8.4.2 Layout Example

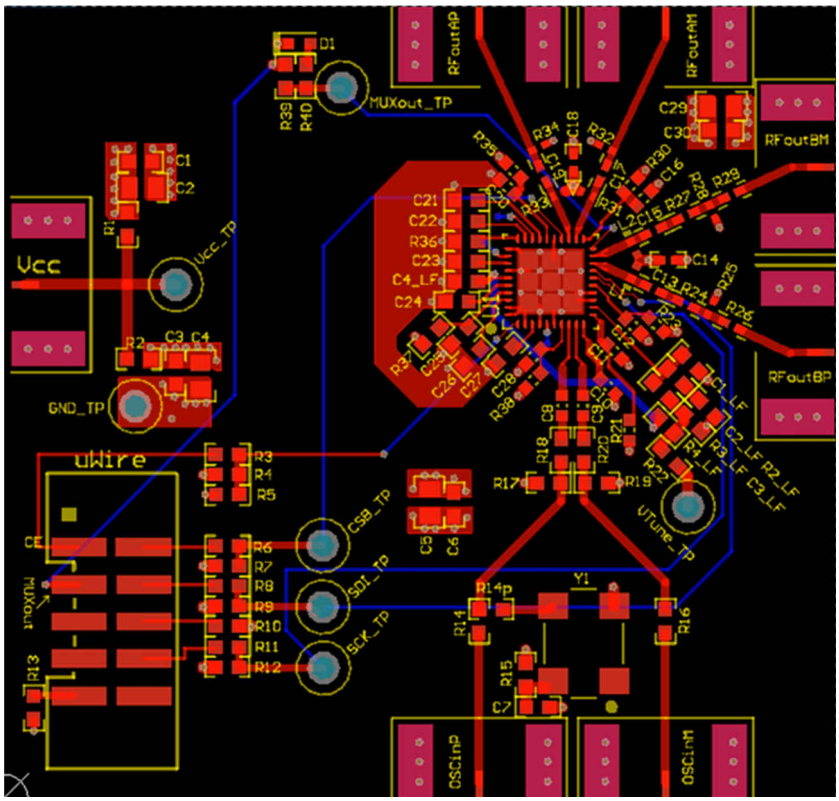

図 8-13. Recommended Layout

9 Device and Documentation Support

9.1 Device Support

9.1.1 Development Support

Texas Instruments has several software tools to aid in the development at www.ti.com. Among these tools are:

- Codeloader to understand how to program the EVM board.
- Clock Design Tool for designing loop filters, simulating phase noise, and simulating spurs.
- EVM board instructions for seeing typical measured data with detailed measurement conditions and a complete design.
- Clock Architect for designing and simulating the device and understanding how it might work with other devices.

9.2 Documentation Support

9.2.1 Related Documentation

The following are recommended reading.

- *AN-1879 Fractional N Frequency Synthesis* (SNAA062)
- *PLL Performance, Simulation, and Design Handbook* (SNAA106)
- *9.8 GHz RF High Performance Synthesizer Operating From a Buck Converter Reference Design* (TIDUC22)
- *RF Sampling S-Band Radar Receiver Reference Design* (TIDUBS6)
- *9.8GHz RF CW Signal Generator Using Integrated Synthesizer With Spur Reduction Reference Design* (TIDUBM1)
- *2-GHz Complex Bandwidth DC-Coupled 14-bit Digitizer Reference Design* (TIDRLM6)

9.3 Receiving Notification of Documentation Updates

To receive notification of documentation updates, navigate to the device product folder on ti.com. Click on *Subscribe to updates* to register and receive a weekly digest of any product information that has changed. For change details, review the revision history included in any revised document.

9.4 サポート・リソース

TI E2E™ サポート・フォーラムは、エンジニアが検証済みの回答と設計に関するヒントをエキスパートから迅速かつ直接得ることができる場所です。既存の回答を検索したり、独自の質問をしたりすることで、設計で必要な支援を迅速に得ることができます。

リンクされているコンテンツは、該当する貢献者により、現状のまま提供されるものです。これらは TI の仕様を構成するものではなく、必ずしも TI の見解を反映したものではありません。TI の使用条件を参照してください。

9.5 Trademarks

PLLatinum™ and TI E2E™ are trademarks of Texas Instruments.
すべての商標は、それぞれの所有者に帰属します。

9.6 Electrostatic Discharge Caution

This integrated circuit can be damaged by ESD. Texas Instruments recommends that all integrated circuits be handled with appropriate precautions. Failure to observe proper handling and installation procedures can cause damage.

ESD damage can range from subtle performance degradation to complete device failure. Precision integrated circuits may be more susceptible to damage because very small parametric changes could cause the device not to meet its published specifications.

9.7 Glossary

TI Glossary — This glossary lists and explains terms, acronyms, and definitions.

Copyright © 2022 Texas Instruments Incorporated

10 Mechanical, Packaging, and Orderable Information

The following pages include mechanical, packaging, and orderable information. This information is the most current data available for the designated devices. This data is subject to change without notice and revision of this document. For browser-based versions of this data sheet, refer to the left-hand navigation.

PACKAGING INFORMATION

Orderable part number	Status (1)	Material type (2)	Package | Pins	Package qty | Carrier	RoHS (3)	Lead finish/ Ball material (4)	MSL rating/ Peak reflow (5)	Op temp (°C)	Part marking (6)
LMX2592RHAR	Active	Production	VQFN (RHA) | 40	2500 | LARGE T&R	Yes	NIPDAUAG	Level-3-260C-168 HR	-40 to 85	LMX2592
LMX2592RHAR.A	Active	Production	VQFN (RHA) | 40	2500 | LARGE T&R	Yes	NIPDAUAG	Level-3-260C-168 HR	-40 to 85	LMX2592
LMX2592RHAR.B	Active	Production	VQFN (RHA) | 40	2500 | LARGE T&R	Yes	NIPDAUAG	Level-3-260C-168 HR	-40 to 85	LMX2592
LMX2592RHAT	Active	Production	VQFN (RHA) | 40	250 | SMALL T&R	Yes	NIPDAUAG	Level-3-260C-168 HR	-40 to 85	LMX2592
LMX2592RHAT.A	Active	Production	VQFN (RHA) | 40	250 | SMALL T&R	Yes	NIPDAUAG	Level-3-260C-168 HR	-40 to 85	LMX2592
LMX2592RHAT.B	Active	Production	VQFN (RHA) | 40	250 | SMALL T&R	Yes	NIPDAUAG	Level-3-260C-168 HR	-40 to 85	LMX2592

(1) **Status:** For more details on status, see our product life cycle.

(2) **Material type:** When designated, preproduction parts are prototypes/experimental devices, and are not yet approved or released for full production. Testing and final process, including without limitation quality assurance, reliability performance testing, and/or process qualification, may not yet be complete, and this item is subject to further changes or possible discontinuation. If available for ordering, purchases will be subject to an additional waiver at checkout, and are intended for early internal evaluation purposes only. These items are sold without warranties of any kind.

(3) **RoHS values:** Yes, No, RoHS Exempt. See the TI RoHS Statement for additional information and value definition.

(4) **Lead finish/Ball material:** Parts may have multiple material finish options. Finish options are separated by a vertical ruled line. Lead finish/Ball material values may wrap to two lines if the finish value exceeds the maximum column width.

(5) **MSL rating/Peak reflow:** The moisture sensitivity level ratings and peak solder (reflow) temperatures. In the event that a part has multiple moisture sensitivity ratings, only the lowest level per JEDEC standards is shown. Refer to the shipping label for the actual reflow temperature that will be used to mount the part to the printed circuit board.

(6) **Part marking:** There may be an additional marking, which relates to the logo, the lot trace code information, or the environmental category of the part.

Multiple part markings will be inside parentheses. Only one part marking contained in parentheses and separated by a "~" will appear on a part. If a line is indented then it is a continuation of the previous line and the two combined represent the entire part marking for that device.

Important Information and Disclaimer: The information provided on this page represents TI's knowledge and belief as of the date that it is provided. TI bases its knowledge and belief on information provided by third parties, and makes no representation or warranty as to the accuracy of such information. Efforts are underway to better integrate information from third parties. TI has taken and continues to take reasonable steps to provide representative and accurate information but may not have conducted destructive testing or chemical analysis on incoming materials and chemicals. TI and TI suppliers consider certain information to be proprietary, and thus CAS numbers and other limited information may not be available for release.

In no event shall TI's liability arising out of such information exceed the total purchase price of the TI part(s) at issue in this document sold by TI to Customer on an annual basis.

TAPE AND REEL INFORMATION

REEL DIMENSIONS

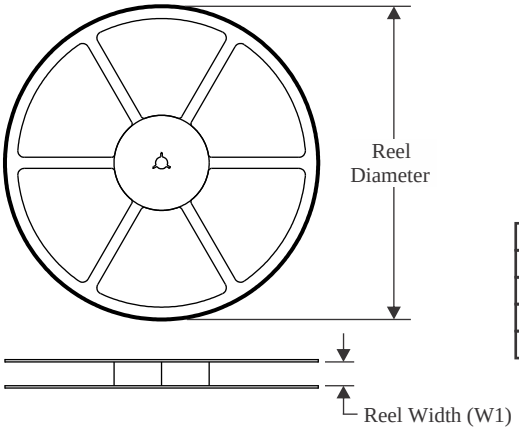

TAPE DIMENSIONS

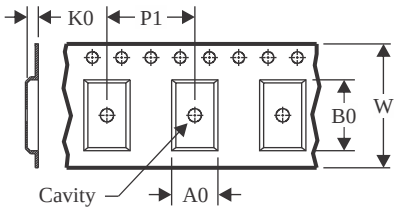

A0	Dimension designed to accommodate the component width
B0	Dimension designed to accommodate the component length
K0	Dimension designed to accommodate the component thickness
W	Overall width of the carrier tape
P1	Pitch between successive cavity centers

QUADRANT ASSIGNMENTS FOR PIN 1 ORIENTATION IN TAPE

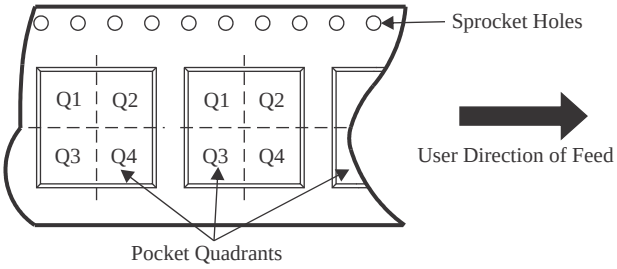

*All dimensions are nominal

Device	Package Type	Package Drawing	Pins	SPQ	Reel Diameter (mm)	Reel Width W1 (mm)	A0 (mm)	B0 (mm)	K0 (mm)	P1 (mm)	W (mm)	Pin1 Quadrant
LMX2592RHAR	VQFN	RHA	40	2500	330.0	16.4	6.3	6.3	1.5	12.0	16.0	Q1
LMX2592RHAT	VQFN	RHA	40	250	178.0	16.4	6.3	6.3	1.5	12.0	16.0	Q1

TAPE AND REEL BOX DIMENSIONS

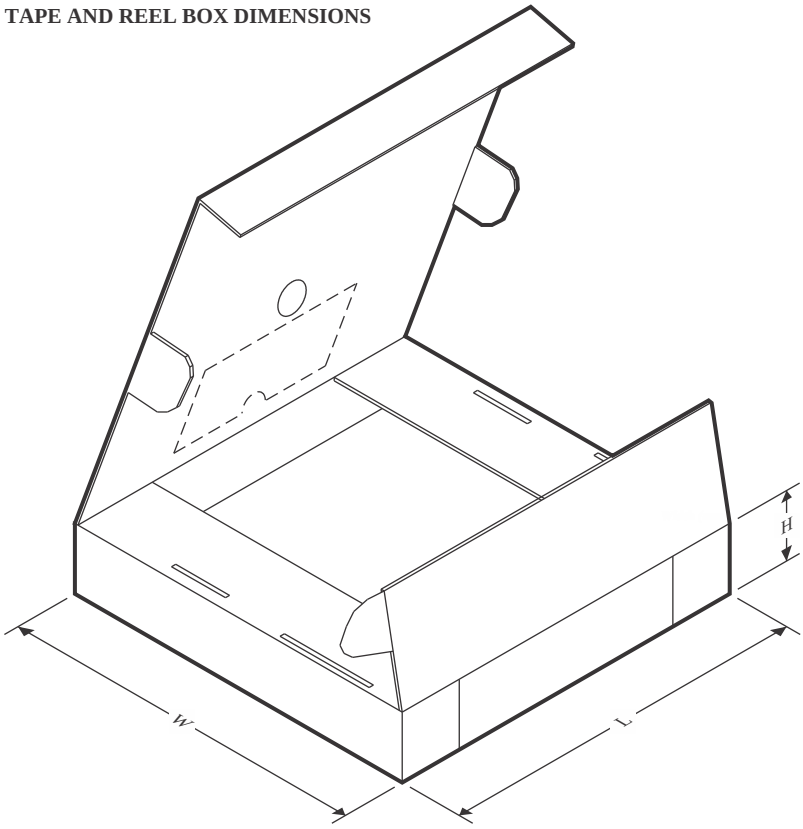

*All dimensions are nominal

Device	Package Type	Package Drawing	Pins	SPQ	Length (mm)	Width (mm)	Height (mm)
LMX2592RHAR	VQFN	RHA	40	2500	356.0	356.0	36.0
LMX2592RHAT	VQFN	RHA	40	250	208.0	191.0	35.0

GENERIC PACKAGE VIEW

RHA 40

VQFN - 1 mm max height

6 x 6, 0.5 mm pitch

PLASTIC QUAD FLATPACK - NO LEAD

This image is a representation of the package family, actual package may vary.
Refer to the product data sheet for package details.

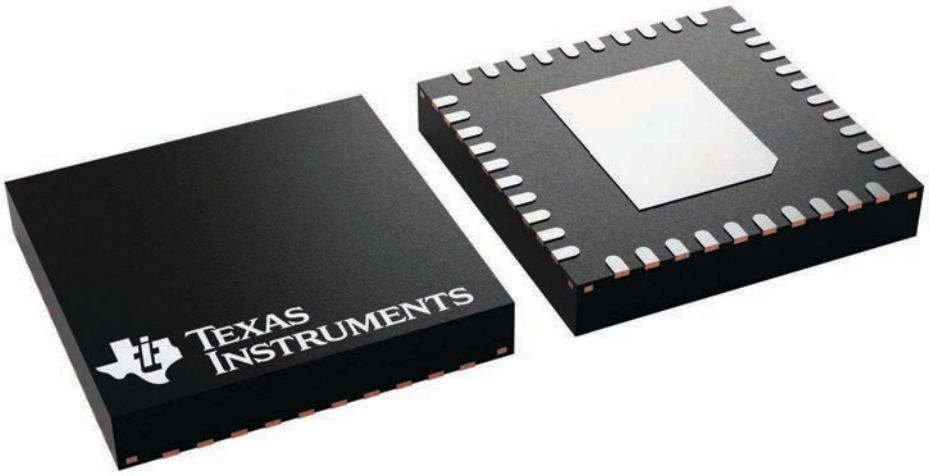

4225870/A

RHA0040H

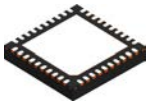

PACKAGE OUTLINE

VQFN - 1 mm max height

PLASTIC QUAD FLATPACK - NO LEAD

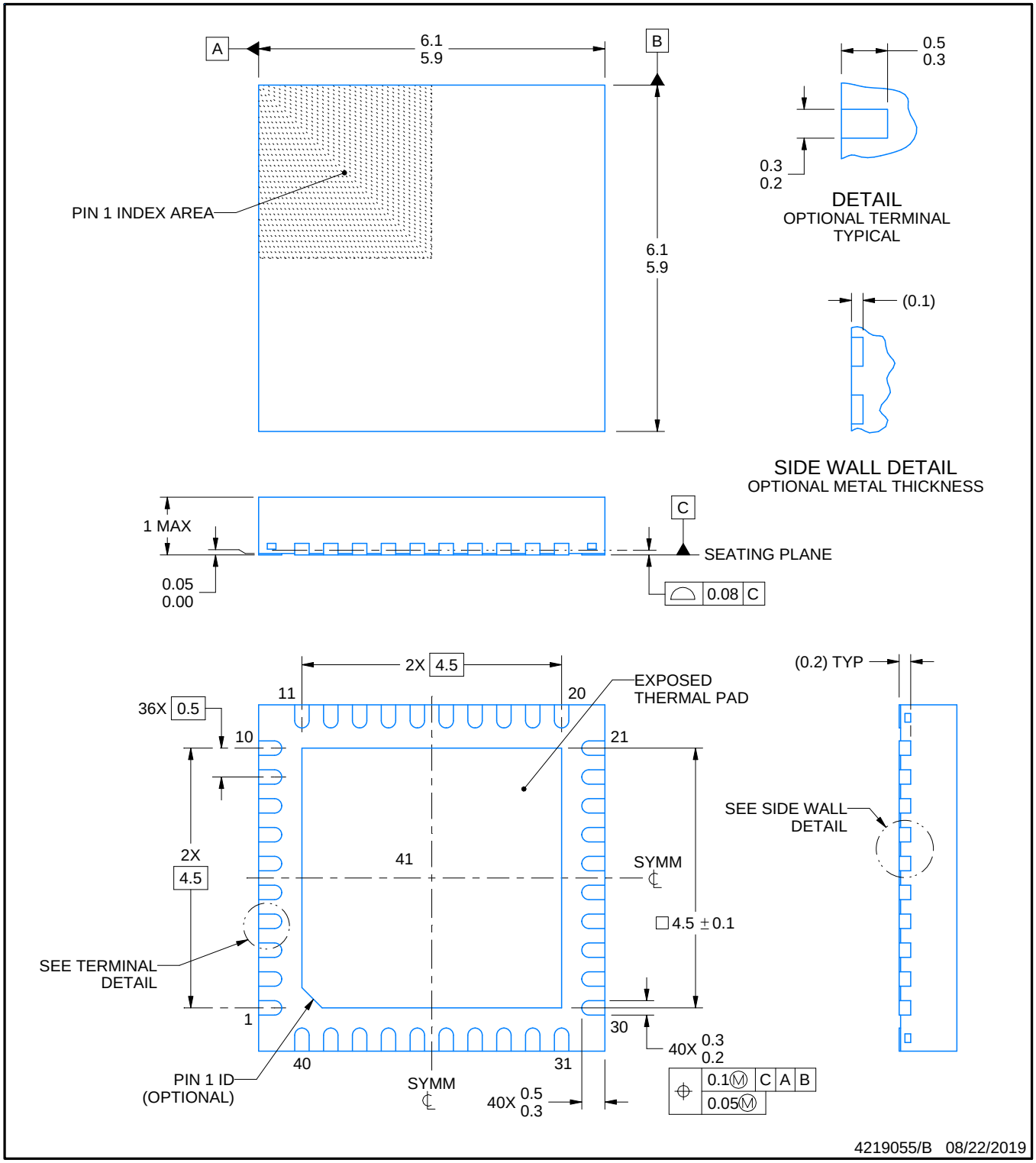

NOTES:

1. All linear dimensions are in millimeters. Any dimensions in parenthesis are for reference only. Dimensioning and tolerancing per ASME Y14.5M.
2. This drawing is subject to change without notice.
3. The package thermal pad must be soldered to the printed circuit board for thermal and mechanical performance.

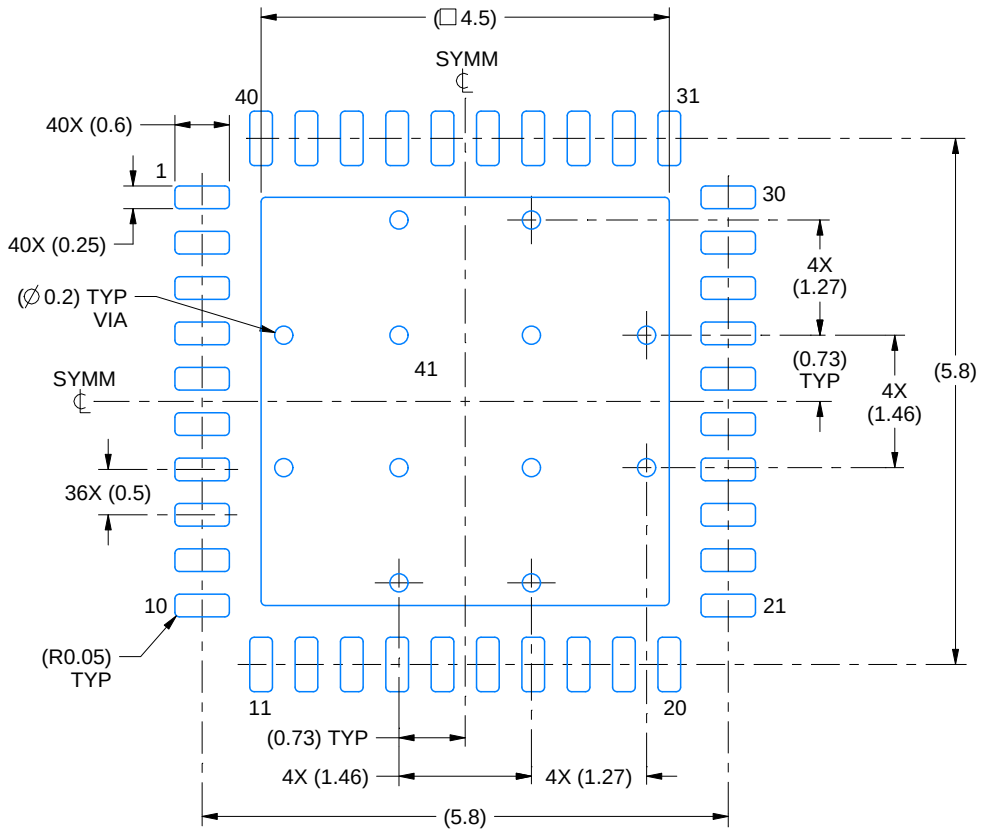

LAND PATTERN EXAMPLE
EXPOSED METAL SHOWN
SCALE:12X

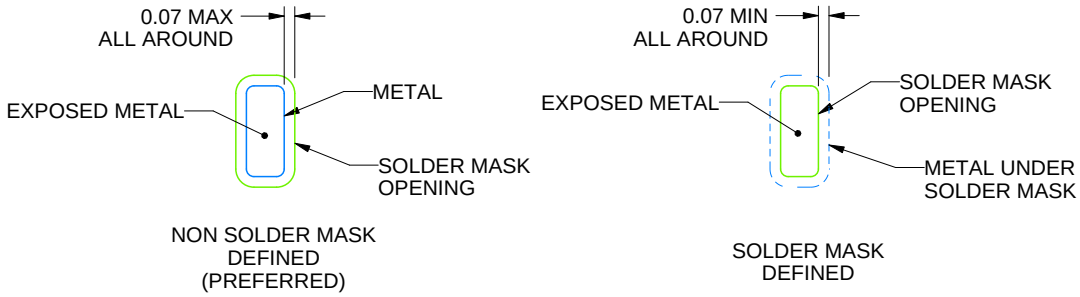

SOLDER MASK DETAILS

4219055/B 08/22/2019

NOTES: (continued)

4. This package is designed to be soldered to a thermal pad on the board. For more information, see Texas Instruments literature number SLUA271 (www.ti.com/lit/slua271).
5. Vias are optional depending on application, refer to device data sheet. If any vias are implemented, refer to their locations shown on this view. It is recommended that vias under paste be filled, plugged or tented.

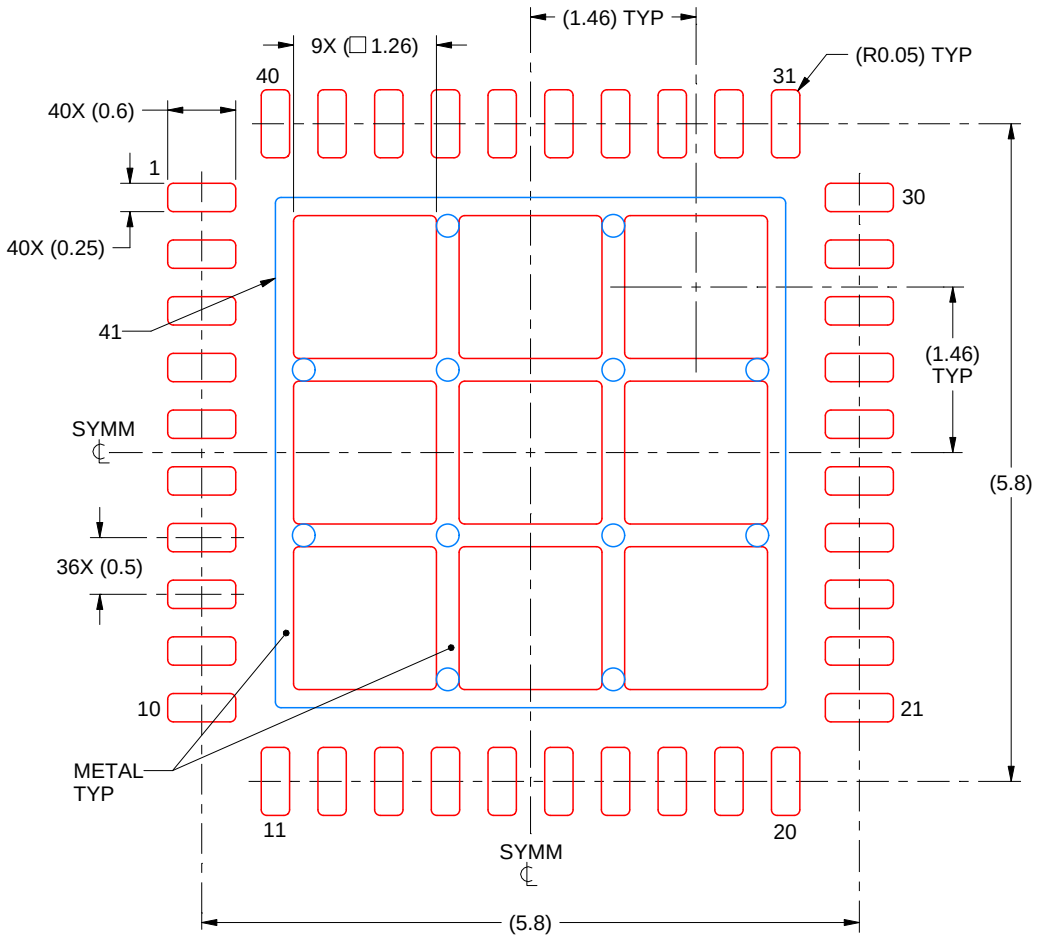

SOLDER PASTE EXAMPLE
BASED ON 0.125 mm THICK STENCIL

EXPOSED PAD 41:
70% PRINTED SOLDER COVERAGE BY AREA
SCALE:15X

4219055/B 08/22/2019

NOTES: (continued)

6. Laser cutting apertures with trapezoidal walls and rounded corners may offer better paste release. IPC-7525 may have alternate design recommendations.

重要なお知らせと免責事項

TI は、技術データと信頼性データ (データシートを含みます)、設計リソース (リファレンス デザインを含みます)、アプリケーションや設計に関する各種アドバイス、Web ツール、安全性情報、その他のリソースを、欠陥が存在する可能性のある「現状のまま」提供しており、商品性および特定目的に対する適合性の黙示保証、第三者の知的財産権の非侵害保証を含むいかなる保証も、明示的または黙示的にかかわらず拒否します。

これらのリソースは、TI 製品を使用する設計の経験を積んだ開発者への提供を意図したものです。(1) お客様のアプリケーションに適した TI 製品の選定、(2) お客様のアプリケーションの設計、検証、試験、(3) お客様のアプリケーションに該当する各種規格や、その他のあらゆる安全性、セキュリティ、規制、または他の要件への確実な適合に関する責任を、お客様のみが単独で負うものとします。

上記の各種リソースは、予告なく変更される可能性があります。これらのリソースは、リソースで説明されている TI 製品を使用するアプリケーションの開発の目的でのみ、TI はその使用をお客様に許諾します。これらのリソースに関して、他の目的で複製することや掲載することは禁止されています。TI や第三者の知的財産権のライセンスが付与されている訳ではありません。お客様は、これらのリソースを自身で使用した結果発生するあらゆる申し立て、損害、費用、損失、責任について、TI およびその代理人を完全に補償するものとし、TI は一切の責任を拒否します。

TI の製品は、 TI の販売条件 、 TI の総合的な品質ガイドライン 、 ti.com または TI 製品などに関連して提供される他の適用条件に従い提供されます。TI がこれらのリソースを提供することは、適用される TI の保証または他の保証の放棄の拡大や変更を意味するものではありません。 TI がカスタム、またはカスタマー仕様として明示的に指定していない限り、TI の製品は標準的なカタログに掲載される汎用機器です。

お客様がいかなる追加条項または代替条項を提案する場合も、TI はそれらに異議を唱え、拒否します。

Copyright © 2026, Texas Instruments Incorporated

最終更新日：2025 年 10 月