LP5866T 6 × 18 LED 大電流マトリクス ドライバ、8 ビット アナログおよび 8/16 ビット PWM 調光付き

1 特長

- LED マトリクスのトポロジ:
  - 108 の LED ドットに対する 6 のスキャン スイッチを備えた 18 個の定電流シンク
  - 1～6 に構成できるスキャン スイッチ
- 動作電圧範囲:
  - V_{CC}/V_{LED} 範囲:2.7V～5.5V
  - 1.8V、3.3V、5V 互換のロジック ピン
- 18 個の高精度定電流シンク:
  - 電流シンクあたり 100mA (V_{CC} ≥ 3.3V)
  - デバイス間誤差:±5%
  - チャネル間誤差:±5%
  - 位相シフトによる過渡電力の平衡化
- 極めて低い消費電力:
  - シャットダウン モード:I_{CC} ≦ 1μA (EN = Low 時)
  - スタンバイ モード:I_{CC} ≦ 10μA (EN = High かつ CHIP_EN = 0 (データ保持) 時)
  - アクティブ モード:I_{CC} = 5mA (標準値)、チャネル電流 = 12.5mA
- 柔軟な調光オプション:
  - 各 LED ドットを個別にオン / オフ制御
  - アナログ調光法 (電流ゲイン制御)
    - すべての LED ドットに対するグローバル 7 ステップ最大電流 (MC) 設定
    - 3 グループの 7 ビット カラー電流 (CC) RGB 設定
    - 各 LED ドットに対する個別の 8 ビット ドット電流 (DC) 設定
  - 可聴ノイズが発生しない周波数を使った PWM 調光
    - すべての LED ドットに対するグローバル 8 ビット PWM 調光法
    - LED ドットを任意に割り当てるための 3 つのプログラム可能な 8 ビット PWM 調光法グループ
    - 各 LED ドットに対する個別の 8 ビットまたは 16 ビット PWM 調光法
- データ通信量を最小限に抑えるための完全にアドレス指定可能な SRAM
- 個別の LED ドット開放 / 短絡検出
- ゴースト除去および低輝度補償機能
- インターフェイス オプション
  - 1MHz (最大値) の I^2C インターフェイス (IFS = Low 時)
  - 12MHz (最大値) の SPI インターフェイス (IFS = High 時)

2 アプリケーション

- LED アニメーションおよび表示:
  - 大型およびスマート家電
  - グローバル RGB キーボードのバックライト
  - 屋外キーパッドのバックライト
  - ビデオ監視および IP カメラ用 IR モジュール
  - 光学モジュール内のレーザー・ダイオード

3 概要

LP5866T は、大電流で高性能の LED マトリクス ドライバです。本デバイスは、N (N = 6/8/11) スイッチング MOSFET を備えた 18 の定電流シンクを内蔵しており、をサポートします。LP5866T は、最大 108 の LED ドットまたは 36 の RGB LED に対応する 6 個の MOSFET を内蔵しています。

LP5866T はアナログ調光法と PWM 調光法の両方をサポートしています。アナログ調光法の場合、各 LED ドットを 256 ステップで調整できます。PWM 調光法の場合、内蔵の 8 ビットまたは 16 ビット構成可能 PWM ジェネレータが、滑らかで可聴ノイズの発生しない調光制御を実現します。各 LED ドットを 8 ビット グループ PWM に任意に割り当てることで、調光制御をまとめて行うこともできます。

LP5866T デバイスは、データ通信量を最小限に抑えるために、完全にアドレス指定可能な SRAM を実装しています。上側と下側のゴーストを除去するため、ゴースト キャンセル回路を内蔵しています。LP5866T は LED 開放 / 短絡検出機能もサポートしています。LP5866T では、1MHz (最大値) の I^2C と 12MHz (最大値) の SPI が使用できます。

パッケージ情報

部品番号	パッケージ (1)	本体サイズ (公称)
LP5866T	RKP (VQFN、40)	5.00mm × 5.00mm

(1) 利用可能なすべてのパッケージについては、データシートの末尾にある注文情報を参照してください。

このリソースの元の言語は英語です。翻訳は概要を便宜的に提供するもので、自動化ツール (機械翻訳) を使用していることがあり、TI では翻訳の正確性および妥当性につきましては一切保証いたしません。実際の設計などの前には、ti.com で必ず最新の英語版をご参照くださいますようお願いいたします。

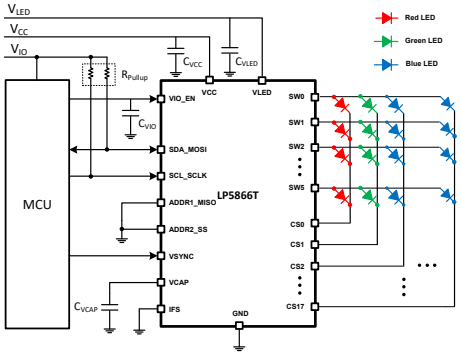

概略回路図

Copyright © 2024 Texas Instruments Incorporated

Table of Contents

1 特長.... 1
2 アプリケーション.... 1
3 概要.... 1
4 Device Comparison.... 4
5 Pin Configuration and Functions.... 5
6 Specifications.... 7
6.1 Absolute Maximum Ratings.... 7
6.2 ESD Ratings.... 7
6.3 Recommended Operating Conditions.... 7
6.4 Thermal Information.... 7
6.5 Electrical Characteristics.... 8
6.6 Timing Requirements.... 9
6.7 Typical Characteristics.... 12
7 Detailed Description.... 14
7.1 Overview.... 14
7.2 Functional Block Diagram.... 14
7.3 Feature Description.... 15
7.4 Device Functional Modes.... 26
7.5 Programming.... 27
7.6 Register Maps.... 32
8 Application and Implementation.... 44
8.1 Application Information.... 44
8.2 Typical Application.... 44
8.3 Power Supply Recommendations.... 47
8.4 Layout.... 47
9 Device and Documentation Support.... 49
9.1 ドキュメントの更新通知を受け取る方法.... 49
9.2 サポート・リソース.... 49
9.3 Trademarks.... 49
9.4 静電気放電に関する注意事項.... 49
9.5 用語集.... 49
10 Revision History.... 49
11 Mechanical, Packaging, and Orderable Information.... 50

4 Device Comparison

PART NUMBER	MATERIAL	LED DOT NUMBER	MAX CURRENT PER CS	PACKAGE(2)	SOFTWARE COMPATIBLE
LP5861T	LP5861TRSMR	18 × 1 = 18	125mA	VQFN-32	Yes
	LP5861TMRSMR(1)				
LP5866T	LP5866TRKPR	18 × 6 = 108	100mA	VQFN-40	
	LP5866TMRKPR(1)				
LP5868T	LP5868TRKPR	18 × 8 = 144			
	LP5868TMRKPR(1)				
LP5860T	LP5860TRKPR	18 × 11 = 198			
	LP5860TMRKPR(1)				
LP5861	LP5861RSMR	18 × 1 = 18	50mA	VQFN-32	
LP5862	LP5862RSMR	18 × 2 = 36		VQFN-32	
	LP5862DBTR			TSSOP-38	
LP5864	LP5864RSMR	18 × 4 = 72		VQFN-32	
	LP5864MRSMR(1)				
LP5866	LP5866RKPR	18 × 6 = 108		VQFN-40	
	LP5866DBTR			TSSOP-38	
	LP5866MDBTR(1)				
LP5868	LP5868RKPR	18 × 8 = 144		VQFN-40	
LP5860	LP5860RKPR	18 × 11 = 198		VQFN-40	
	LP5860MRKPR(1)				

(1) Extended Temperature devices, supporting –55°C to approximately 125°C operating ambient temperature.
(2) The same packages are hardware compatible.

Copyright © 2024 Texas Instruments Incorporated

5 Pin Configuration and Functions

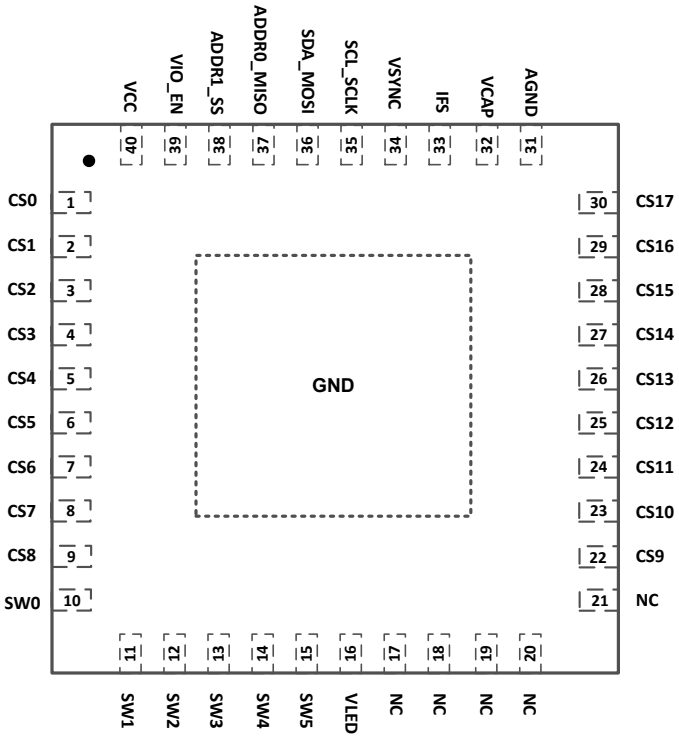

図 5-1. LP5866T RKP Package 40-Pin VQFN with Exposed Thermal Pad Top View

表 5-1. Pin Functions

PIN		I/O	DESCRIPTION
NO.	NAME		
1	CS0	O	Current sink 0. If not used, this pin must be floating.
2	CS1	O	Current sink 1. If not used, this pin must be floating.
3	CS2	O	Current sink 2. If not used, this pin must be floating.
4	CS3	O	Current sink 3. If not used, this pin must be floating.
5	CS4	O	Current sink 4. If not used, this pin must be floating.
6	CS5	O	Current sink 5. If not used, this pin must be floating.
7	CS6	O	Current sink 6. If not used, this pin must be floating.
8	CS7	O	Current sink 7. If not used, this pin must be floating.
9	CS8	O	Current sink 8. If not used, this pin must be floating.
10	SW0	O	High-side PMOS switch output for scan line 0. If not used, this pin must be floating.
11	SW1	O	High-side PMOS switch output for scan line 1. If not used, this pin must be floating.
12	SW2	O	High-side PMOS switch output for scan line 2. If not used, this pin must be floating.
13	SW3	O	High-side PMOS switch output for scan line 3. If not used, this pin must be floating.
14	SW4	O	High-side PMOS switch output for scan line 4. If not used, this pin must be floating.
15	SW5	O	High-side PMOS switch output for scan line 5. If not used, this pin must be floating.
16	VLED	Power	Power input for high-side switches.
17	NC	-	No connection.
18	NC	-	No connection.
19	NC	-	No connection.
20	NC	-	No connection.

表 5-1. Pin Functions (続き)

PIN		I/O	DESCRIPTION
NO.	NAME		
21	NC	-	No connection.
22	CS9	O	Current sink 9. If not used, this pin must be floating.
23	CS10	O	Current sink 10. If not used, this pin must be floating.
24	CS11	O	Current sink 11. If not used, this pin must be floating.
25	CS12	O	Current sink 12. If not used, this pin must be floating.
26	CS13	O	Current sink 13. If not used, this pin must be floating.
27	CS14	O	Current sink 14. If not used, this pin must be floating.
28	CS15	O	Current sink 15. If not used, this pin must be floating.
29	CS16	O	Current sink 16. If not used, this pin must be floating.
30	CS17	O	Current sink 17. If not used, this pin must be floating.
31	AGND	Ground	Analog ground. Must be connected to exposed thermal pad and common ground plane.
32	VCAP	O	Internal LDO output. An 1µF capacitor must be connected between this pin with GND. Place the capacitor as close to the device as possible.
33	IFS	I	Interface type select. I^2C is selected when IFS is low. SPI is selected when IFS is high. A resistor must be connected between VIO and this pin.
34	VSYNC	I	External synchronize signal for display mode 2 and mode 3.
35	SCL_SCLK	I	I^2C clock input or SPI clock input. Pull up to VIO when configured as I^2C.
36	SDA_MOSI	I/O	I^2C data input or SPI leader output follower input. Pull up to VIO when configured as I^2C.
37	ADDR0_MISO	I/O	I^2C address select 0 or SPI leader input follower output.
38	ADDR1_SS	I	I^2C address select 1 or SPI follower select.
39	VIO_EN	Power,I	Power supply for digital circuits and chip enable. An 1nF capacitor must be connected between this pin with GND and be placed as close to the device as possible.
40	VCC	Power	Power supply for device. A 1µF capacitor must be connected between this pin with GND and be placed as close to the device as possible.
Exposed Thermal Pad	GND	Ground	Must be connected to AGND and common ground plane.

Copyright © 2024 Texas Instruments Incorporated

6 Specifications

6.1 Absolute Maximum Ratings

over operating free-air temperature range (unless otherwise noted)[1]

		MIN	MAX	UNIT
Voltage on V_{CC} / V_{LED} / VIO / EN / CS / SW / SDA / SCL / SCLK / MOSI / MISO / SS / ADDR0 / ADDR1 / VSYNC / IFS		–0.3	6	V
Voltage on VCAP		–0.3	2	V
T_J	Junction temperature	–55	150	°C
T_{stg}	Storage temperature	–65	150	°C

(1) Operation outside the Absolute Maximum Ratings may cause permanent device damage. Absolute Maximum Ratings do not imply functional operation of the device at these or any other conditions beyond those listed under Recommended Operating Conditions. If used outside the Recommended Operating Conditions but within the Absolute Maximum Ratings, the device may not be fully functional, and this may affect device reliability, functionality, performance, and shorten the device lifetime.

6.2 ESD Ratings

			VALUE	UNIT
$V_{(ESD)}$	Electrostatic discharge	Human body model (HBM), per ANSI/ESDA/JEDEC JS-001, all pins[1]	±3000	V
		Charged device model (CDM), per ANSI/ESDA/JEDEC JS-002, all pins[2]	±1000	

(1) JEDEC document JEP155 states that 500-V HBM allows safe manufacturing with a standard ESD control process.
(2) JEDEC document JEP157 states that 250-V CDM allows safe manufacturing with a standard ESD control process.

6.3 Recommended Operating Conditions

over operating free-air temperature range (unless otherwise noted)

		MIN	NOM	MAX	UNIT
Input voltage on V_{CC}	Supply voltage	2.7		5.5	V
Input voltage on V_{LED}	LED supply voltage	2.7		5.5	V
Input voltage on VIO_EN		1.65		5.5	V
Voltage on SDA / SCL / SCLK / MOSI / MISO / SS / ADDRx / VSYNC / IFS				VIO	V
T_A	Operating ambient temperature	–40		85	°C
T_A	Operating ambient temperature - LP5860TMRKPR, LP5866TMRKPR and LP5868TMRKPR	–55		125	°C

6.4 Thermal Information

THERMAL METRIC		LP5860T, LP5868T, LP5866T RKP (VQFN) 40 PINS	UNIT
$R_{\theta JA}$	Junction-to-ambient thermal resistance	31.4	°C/W
$R_{\theta JC(top)}$	Junction-to-case (top) thermal resistance	22.9	°C/W
$R_{\theta JB}$	Junction-to-board thermal resistance	12.0	°C/W
Ψ_{JT}	Junction-to-top characterization parameter	0.3	°C/W
Ψ_{JB}	Junction-to-board characterization parameter	12.0	°C/W
$R_{\theta JC(bot)}$	Junction-to-case (bottom) thermal resistance	3.5	°C/W

6.5 Electrical Characteristics

V_{CC} = 3.3V, V_{LED} = 5V, VIO = 1.8V and T_A = –40°C to +85°C(T_A = –55°C to +125°C for LP5860TMRKPR, LP5866TMRKPR and LP5868TMRKPR); Typical values are at T_A = 25°C (unless otherwise specified)

PARAMETER		TEST CONDITIONS	MIN	TYP	MAX	UNIT
Power supplies						
V_{CC}	Device supply voltage		2.7		5.5	V
V_{UVR}	Undervoltage restart	V_{CC} rising, Test mode			2.5	V
V_{UVF}	Undervoltage shutdown	V_{CC} falling, Test mode	1.9			V
V_{UV_HYS}	Undervoltage shutdown hysteresis			0.3		V
V_{CAP}	Internal LDO output	V_{CC} = 2.7V to 5.5V		1.78		V
I_{CC}	Shutdown supply current $I_{SHUTDOWN}$	V_{EN} = 0, CHIP_EN = 0 (bit), ADDx = 0; measure the total current from V_{CC} and V_{LED}		0.1	1.5	µA
	Standby supply current $I_{STANDBY}$	V_{EN} = 3.3V, CHIP_EN = 0 (bit), measure the total current from V_{CC} and V_{LED}		5.5	12	µA
	Active mode supply current I_{NORMAL}	V_{EN} = 3.3V, CHIP_EN = 1 (bit), all channels I_{OUT} = 12.5 mA (MC = 1, CC = 127, DC = 256), measure the current from V_{CC}		4.3	6	mA
V_{LED}	LED supply voltage		2.7		5.5	V
V_{VIO}	VIO supply voltage		1.65		5.5	V
I_{VIO}	VIO supply current	Interface idle			5	µA
Output Stages						
I_{CS}	Constant current sink output range (CS0 – CS17)	2.7 <= V_{CC} < 3.3V, PWM = 100%	0.1		75	mA
		V_{CC} >= 3.3V PWM = 100%	0.1		100	mA
I_{LKG}	Leakage current (CS0 – CS17)	channels off, up_deghost = 0, V_{CS}=5V		0.1	1	µA
I_{ERR_DD}	Device to device current error, I_{ERR_DD} = (I_{AVE}-I_{SET})/I_{SET}×100%	All channels ON. Current set to 1 mA. MC = 0 CC = 17 DC = 255 PWM = 100%	–5		5	%
		All channels ON. Current set to 25 mA. MC = 2 CC = 127 DC = 255 PWM = 100%	–5		5	%
		All channels ON. Current set to 50 mA. MC = 4 CC = 127 DC = 255 PWM = 100%	-5		5	%
		All channels ON. Current set to 75 mA. MC=5 CC=64 DC=255 PWM=100%	–5		5	%
		All channels ON. Current set to 100 mA. MC = 6 CC = 127 DC = 255 PWM = 100%	–5		5	%
I_{ERR_CC}	Channel to channel current error, I_{ERR_CC} = (I_{OUTX}-I_{AVE})/I_{AVE}×100%	All channels ON. Current set to 1 mA. MC = 0 CC = 17 DC = 255 PWM = 100%	–5		5	%
		All channels ON. Current set to 25 mA. MC = 2 CC = 127 DC = 255 PWM = 100%	–5		5	%
		All channels ON. Current set to 50 mA. MC = 4 CC = 127 DC = 255 PWM = 100%	–5		5	%
		All channels ON. Current set to 75 mA. MC=5 CC=64 DC=255 PWM=100%	–5		5	%
		All channels ON. Current set to 100 mA. MC = 6 CC = 127 DC = 255 PWM = 100%	–5		5	%
f_{PWM}	LED PWM frequency	PWM_Fre = 1, PWM = 100%		62.5		KHz
		PWM_Fre = 0, PWM = 100%		125		KHz

Copyright © 2024 Texas Instruments Incorporated

V_{CC} = 3.3V, V_{LED} = 5V, VIO = 1.8V and T_A = –40°C to +85°C(T_A = –55°C to +125°C for LP5860TMRKPR, LP5866TMRKPR and LP5868TMRKPR); Typical values are at T_A = 25°C (unless otherwise specified)

PARAMETER		TEST CONDITIONS	MIN	TYP	MAX	UNIT
V_{SAT}	Output saturation voltage	I_{OUT} = 100mA, decreasing output voltage, when the LED current has dropped 5% (only apply to LP5860TMRKPR, LP5866TMRKPR and LP5868TMRKPR)			0.8	V
		I_{OUT} = 100mA, decreasing output voltage, when the LED current has dropped 5% (only apply to LP5860TRKPR, LP5866TRKPR and LP5868TRKPR)			0.7	V
		I_{OUT} = 75mA, decreasing output voltage, when the LED current has dropped 5%			0.6	V
		I_{OUT} = 25mA, decreasing output voltage, when the LED current has dropped 5%			0.5	V
R_{SW}	High-side PMOS ON resistance	V_{LED} = 2.7 V, I_{SW} = 200 mA		450		mΩ
		V_{LED} = 2.7 V, I_{SW} = 200 mA, LP5860MRKPR and LP5864MRSMR		450		mΩ
		V_{LED} = 3.8 V, I_{SW} = 200mA		380		mΩ
		V_{LED} = 3.8 V, I_{SW} = 200 mA, LP5860MRKPR and LP5864MRSMR		380		mΩ
		V_{LED} = 5 V, I_{SW} = 200 mA		310		mΩ
		V_{LED} = 5V, I_{SW} = 200 mA, LP5860MRKPR and LP5864MRSMR		310		mΩ
Logic Interfaces						
V_{LOGIC_IL}	Low-level input voltage, SDA, SCL, SCLK, MOSI, SS, ADDRx, VSYNC, IFS				0.3 x VIO	V
V_{LOGIC_IH}	High-level input voltage, SDA, SCL, SCLK, MOSI, SS, ADDRx, VSYNC, IFS		0.7 x VIO			V
V_{EN_IL}	Low-level input voltage of EN				0.4	V
V_{EN_IH}	High-level input voltage of EN	When V_{CAP} powered up	1.4			V
I_{LOGIC_I}	Input current, SDA, SCL, SCLK, MOSI, SS, ADDRx		–1		1	µA
V_{LOGIC_OL}	Low-level output voltage, SDA, MISO	I_{PULLUP} = 3 mA			0.4	V
V_{LOGIC_OH}	High-level output voltage, MISO	I_{PULLUP} = –3 mA	0.7 x VIO			V
Protection Circuits						
V_{LOD_TH}	Thershold for channel open detection			0.25		V
V_{LSD_TH}	Thershold for channel short detection			V_{LED} – 1		V
T_{TSD}	Thermal-shutdown junction temperature			150		°C
T_{HYS}	Thermal shutdown temperature hysteresis			15		°C

6.6 Timing Requirements

		MIN	NOM	MAX	UNIT
MISC. Timming Requirements					
f_{OSC}	Internal oscillator frequency		31.2		MHz
f_{OSC_ERR}	Device to device oscillator frequency error	–3%		3%	
t_{POR_H}	Wait time from UVLO disactive to device NORMAL			500	µs
t_{CHIP_EN}	Wait time from setting Chip_EN (Register) =1 to device NORMAL			100	µs
t_{RISE}	LED output rise time		10		ns

		MIN	NOM	MAX	UNIT
t_{FALL}	LED output fall time		15		ns
t_{VSYNC_H}	The minimum high-level pulse width of VSYNC	200			µs
SPI timing requirements					
f_{SCLK}	SPI Clock frequency			12	MHz
1	Cycle time	83.3			ns
2	SS active lead-time	50			ns
3	SS active leg time	50			ns
4	SS inactive time	50			ns
5	SCLK low time	36			ns
6	SCLK high time	36			ns
7	MOSI set-up time	20			ns
8	MOSI hold time	20			ns
9	MISO disable time			30	ns
10	MISO data valid time			35	ns
C_b	Bus capacitance	5		40	pF
I^2C fast mode timing requirements					
f_{SCL}	I^2C clock frequency	0		400	KHz
1	Hold time (repeated) START condition	600			ns
2	Clock low time	1300			ns
3	Clock high time	600			ns
4	Setup time for a repeated START condition	600			ns
5	Data hold time	0			ns
6	Data setup time	100			ns
7	Rise time of SDA and SCL			300	ns
8	Fall time of SDA and SCL			300	ns
9	Setup time for STOP condition	600			ns
10	Bus free time between a STOP and a START condition	1.3			µs
I^2C fast mode plus timing requirements					
f_{SCL}	I^2C clock frequency	0		1000	KHz
1	Hold time (repeated) START condition	260			ns
2	Clock low time	500			ns
3	Clock high time	260			ns
4	Setup time for a repeated START condition	260			ns
5	Data hold time	0			ns
6	Data setup time	50			ns
7	Rise time of SDA and SCL			120	ns
8	Fall time of SDA and SCL			120	ns
9	Setup time for STOP condition	260			ns
10	Bus free time between a STOP and a START condition	0.5			µs

Copyright © 2024 Texas Instruments Incorporated

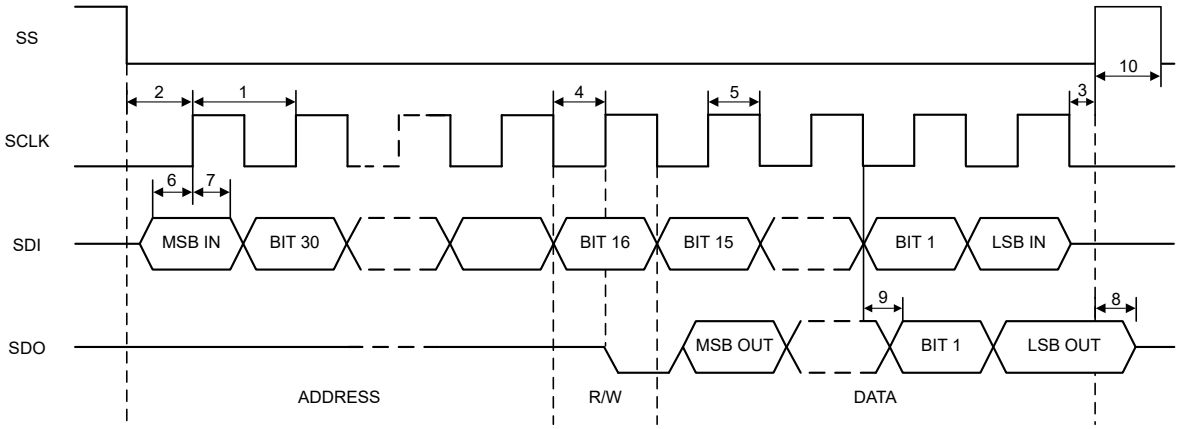

図 6-1. SPI Timing Parameters

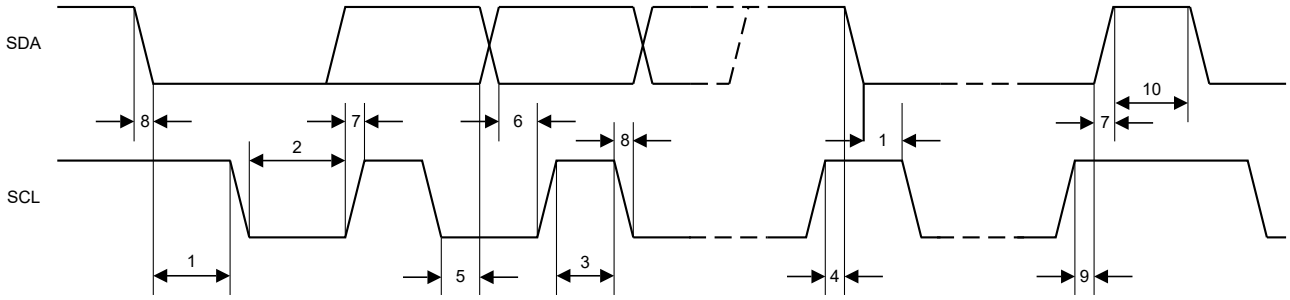

図 6-2. I²C Timing Parameters

6.7 Typical Characteristics

Unless specified otherwise, typical characteristics apply over the full ambient temperature range (–55°C < T_A < +125°C for LP5866TMRKPR, LP5864MRSMR, and LP5866MDBTR while –40°C < T_A < +85°C for the other devices), V_{CC} = 3.3V, V_{IO} = 3.3V, V_{LED} = 5V, I_{LED_Peak} = 50mA, C_{VLED} = 1µF, C_{VCC} = 1µF.

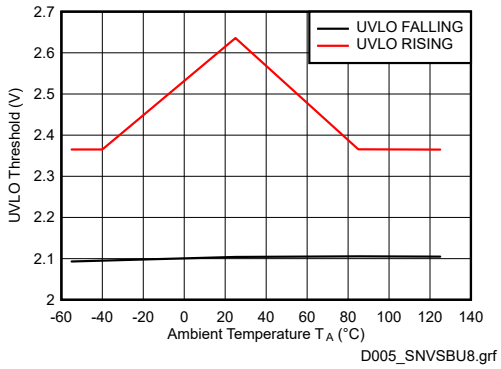

図 6-3. V_{CC} UVLO Rising and Falling Thresholds

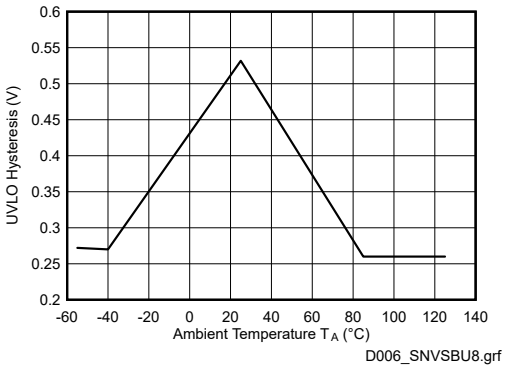

図 6-4. V_{CC} UVLO Hysteresis

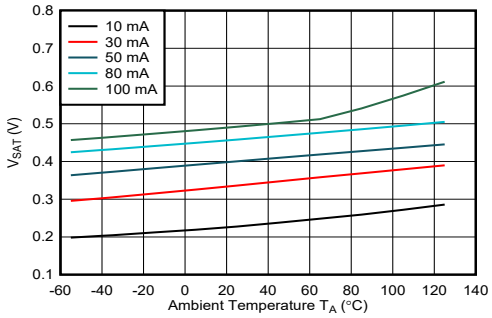

図 6-5. V_{SAT} vs Temperature

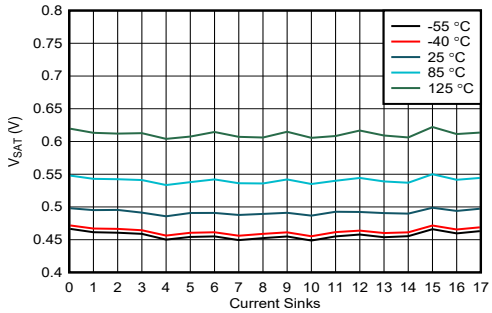

図 6-6. V_{SAT} vs Current Sinks (100mA)

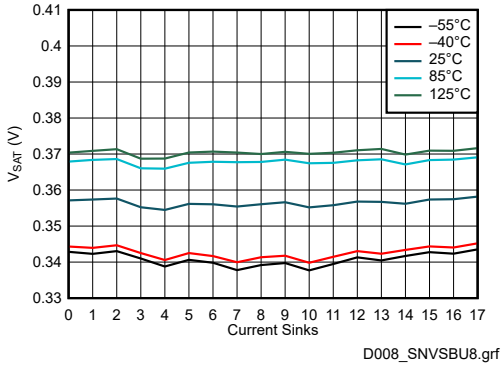

図 6-7. V_{SAT} vs Current Sinks (50mA)

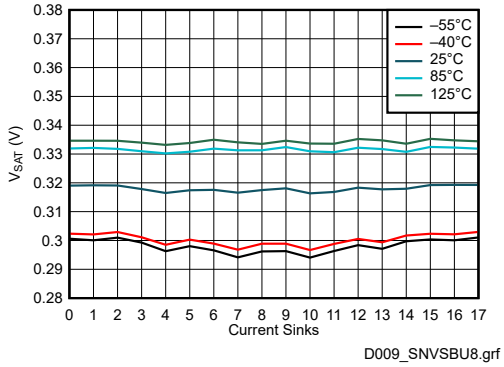

図 6-8. V_{SAT} vs Current Sinks (30mA)

Copyright © 2024 Texas Instruments Incorporated

6.7 Typical Characteristics (continued)

Unless specified otherwise, typical characteristics apply over the full ambient temperature range (–55°C < T_A < +125°C for LP5866TMRKPR, LP5864MRSMR, and LP5866MDBTR while –40°C < T_A < +85°C for the other devices), V_{CC} = 3.3V, V_{IO} = 3.3V, V_{LED} = 5V, I_{LED_Peak} = 50mA, C_{VLED} = 1µF, C_{VCC} = 1µF.

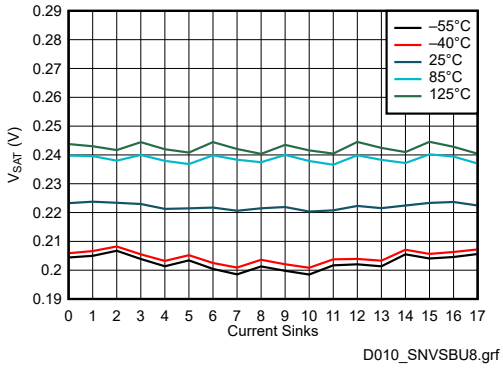

図 6-9. V_{SAT} vs Current Sinks (10mA)

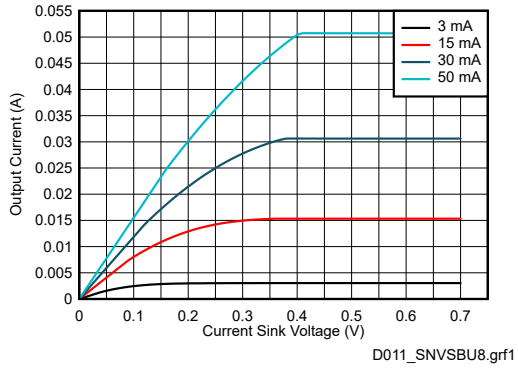

T_A = 25°C

図 6-10. Current Sinks Voltage vs Current

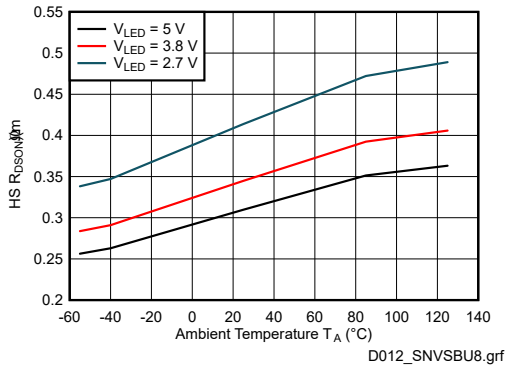

図 6-11. High Side Switch R_{DSON}

7 Detailed Description

7.1 Overview

The LP5866T is an 6 × 18 LED matrix driver. The device integrates 6 switching FETs with 18 constant current sinks. One LP5866T device can drive up to 108 LED dots or 36 RGB pixels by using time-multiplexing matrix scheme.

The LP5866T supports both analog dimming and PWM dimming methods. For analog dimming, the current gain of each individual LED dot can be adjusted with 256 steps through 8-bits dot correction. For PWM dimming, the integrated 8-bits or 16-bits configurable, > 20KHz PWM generators for each LED dot enable smooth, vivid animation effects without audible noise. Each LED can also be mapped into a 8-bits group PWM to achieve the group control with minimum data traffic.

The LP5866T device implements full addressable SRAM. The device supports entire SRAM data refresh and partial SRAM data update on demand to minimize the data traffic. The LP5866T implements the ghost cancellation circuit to eliminate both upside and downside ghosting. The LP5866T also uses low brightness compensation technology to support high density LED pixels. Both 1MHz (maximum) I^2C and 12MHz (maximum) SPI interfaces are available in the LP5866T.

7.2 Functional Block Diagram

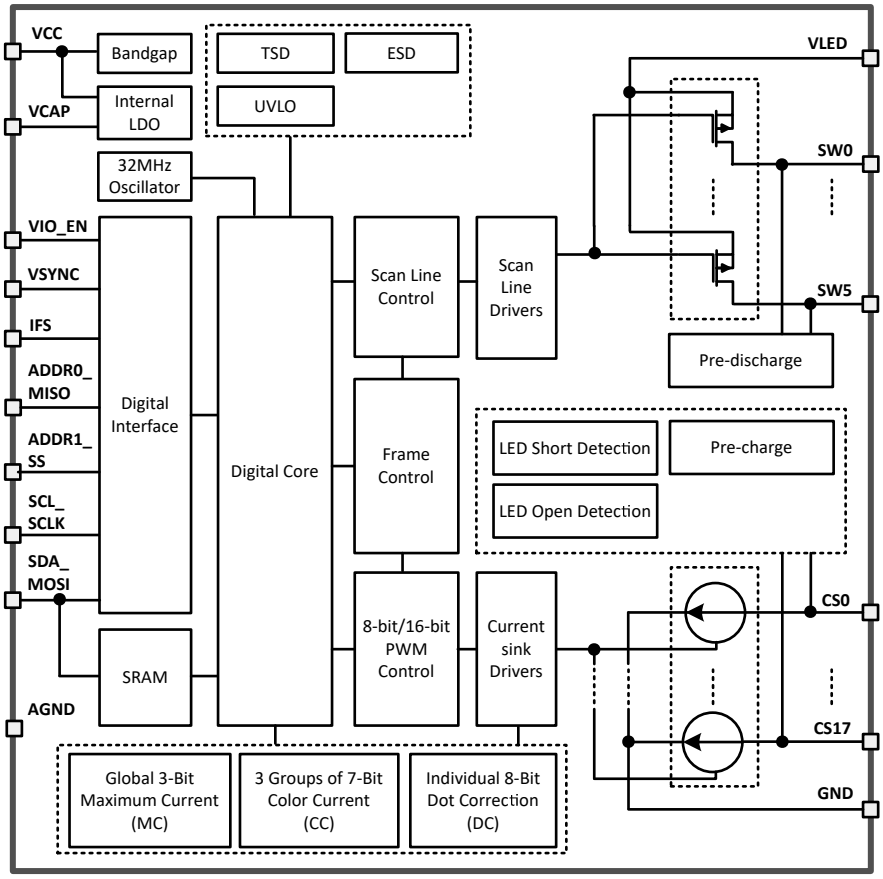

Copyright © 2024 Texas Instruments Incorporated

7.3 Feature Description

7.3.1 Time-Multiplexing Matrix

The LP5866T device uses a time-multiplexing matrix scheme to support up to 108 LED dots with one chip. The device integrates 18 current sinks with 6 scan lines to drive 18 × 6 = 108 LED dots or 6 × 6 = 36 RGB pixels. In matrix control scheme, the device scans from Line 0 to Line 5 sequentially as shown in 図 7-1. Current gain and PWM duty registers are programmable for each LED dot to support individual analog and PWM dimming.

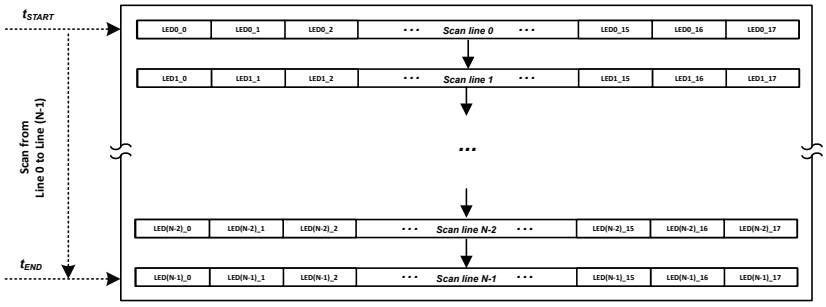

図 7-1. Scan Line Control Scheme

There are 6 high-side p-channel MOSFETs (PMOS) integrated in LP5866T device. The time-multiplexing matrix timing sequence follows the 図 7-2.

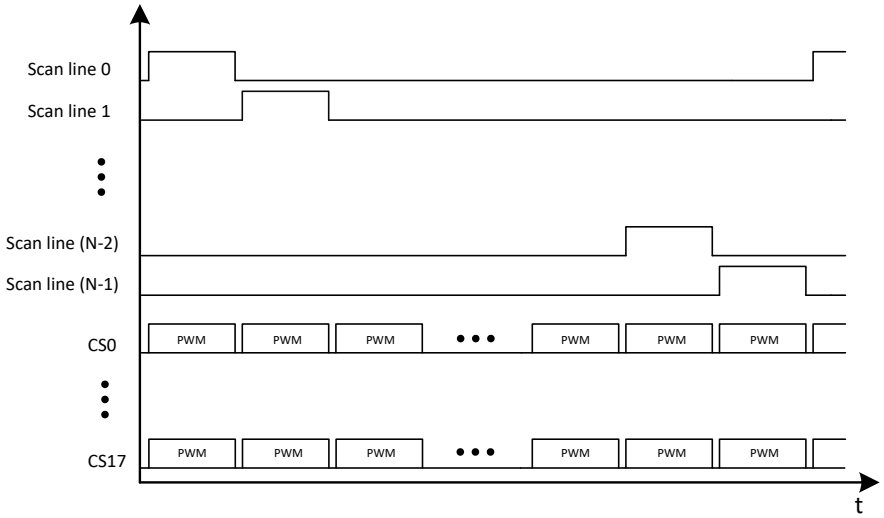

図 7-2. Time-Multiplexing Matrix Timing Sequence

One cycle time of the line switching can be calculated as below:

$$t_{line_switch} = t_{PWM} + t_{SW_BLK} + 2 \times t_{phase_shift} \quad (1)$$

- t_{PWM} is the current sink active time, which equals to 8µs (PWM frequency set at 125kHz) or 16µs (PWM frequency set at 62.5kHz) by configuring 'PWM_Fre' in Dev_initial register.
- t_{SW_BLK} is the switch blank time, which equals to 1µs or 0.5µs by configuring 'SW_BLK' in Dev_config1 register.
- t_{phase_shift} is the PWM phase shift time, which equal to 0 or 125ns by configuring 'PWM_Phase_Shift' in Dev_config1 register.

Total display time for one complete sub-period is t_{sub_period} and can be calculated by the following equation:

$$t_{sub_period} = t_{line_switch} \times \text{Scan_line\#} \quad (2)$$

- Scan_line# is the scan line number determined by 'Max_Line_Num' in Dev_initial register.

The time-multiplexing matrix scheme time diagram is shown in 図 7-3. The $t_{CS_ON_Shift}$ is the current sink turning on shift by configuring 'CS_ON_Shift' bit in Dev_config1 register.

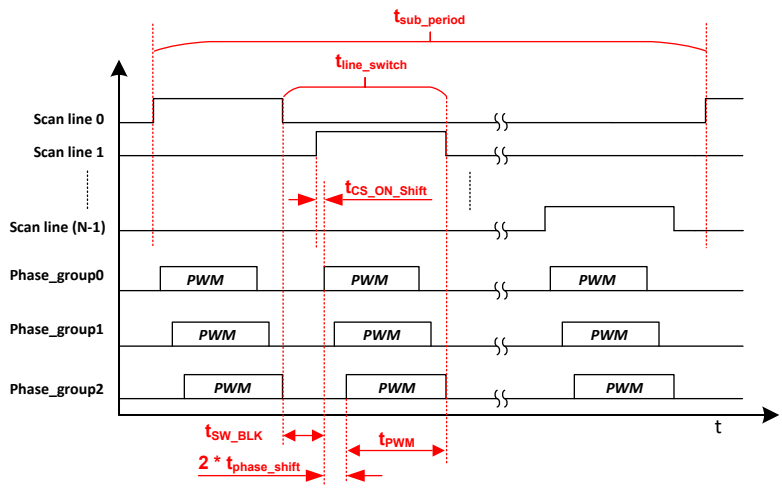

図 7-3. Time-Multiplexing Matrix Timing Diagram

The LP5866T device implements de-ghosting and low brightness compensation to remove the side effects of matrix topology:

- **De-ghosting**: Both upside de-ghosting and downside de-ghosting are implemented to eliminate the LED's unexpected weak turn-on.
  - Upside_de-ghosting: discharge each scan line during blank state. By configuring the 'Up_Deghost' in Dev_config3 register, the LP5866T discharges and clamps the scan line switch to a certain voltage.
  - Downside_deghosting: pre-charge each current sink voltage during blank state. The de-ghosting capability can be adjusted through the 'Down_Deghost' in Dev_config3 register.
- **Low Brightness Compensation**: three groups compensation are implemented to overcome the color-shift and non-uniformity in low brightness conditions. The compensation capability can be through 'Comp_Group1', 'Comp_Group2', and 'Comp_Group3' in Dev_config2 register.
  - Compensation_group 1: CS0, CS3, CS6, CS9, CS12, CS15.
  - Compensation_group 2: CS1, CS4, CS7, CS10, CS13, CS16.
  - Compensation_group 3: CS2, CS5, CS8, CS11, CS14, CS17.

Copyright © 2024 Texas Instruments Incorporated

7.3.2 Analog Dimming (Current Gain Control)

Analog dimming of LP5866T is achieved by configuring the current gain control. There are several methods to control the current gain of each LED.

- Global 3-bits Maximum Current (MC) setting without external resistor
- 3 Groups of 7-bits Color Current (CC) setting
- Individual 8-bit Dot Current (DC) setting

注

When setting to small output current in low brightness situation, adjusting MC to a small value firstly can get smaller output saturation voltage.

7.3.2.1 Global 3-Bits Maximum Current (MC) Setting

The MC is used to set the maximum current I_{OUT_MAX} for each current sink, and this current is the maximum peak current for each LED dot. The MC can be set with 7 steps from 7.5 mA to 100 mA. When the device is powered on, the MC data is set to default value, which is 37.5 mA.

For data refresh Mode 1, MC data is effective immediately after new data is updated. For Mode 2 and Mode 3, to avoid unexpected MC data change during high speed data refreshing, MC data must be changed when all channels are off and new MC data is only updated when the 'Chip_EN' bit in Chip_en register is set to 0, and after the 'Chip_EN' returns to 1, the new MC data is effective. 'Down_Deghost' and 'Up_Deghost' in Dev_config3 work in the similar way with MC.

表 7-1. Maximum Current (MC) Register Setting

3-BITS MAXIMUM_CURRENT REGISTER		I_{OUT_MAX}
Binary	**Decimal**	**mA**
000	0	7.5
001	1	12.5
010	2	25
011 (Default)	3 (Default)	37.5 (Default)
100	4	50
101	5	75
110	6	100

7.3.2.2 3 Groups of 7-Bits Color Current (CC) Setting

The LP5866T device is able to adjust the output current of three color groups separately. For each color, the device has 7-bits data in 'CC_Group1', 'CC_Group2', and 'CC_Group3'. Thus, all color group currents can be adjusted in 128 steps from 0% to 100% of the maximum output current, I_{OUT_MAX}.

The 18 current sinks have fixed mapping to the three color groups:

- CC-Group 1: CS0, CS3, CS6, CS9, CS12, CS15.
- CC-Group 2: CS1, CS4, CS7, CS10, CS13, CS16.
- CC-Group 3: CS2, CS5, CS8, CS11, CS14, CS17.

表 7-2. 3 Groups of 7-bits Color Current (CC) Setting

7-BITS CC_GROUP1/CC_GROUP2/CC_GROUP3 REGISTER		RATIO OF OUTPUT CURRENT TO I_{OUT_MAX}
Binary	**Decimal**	**%**
000 0000	0	0
000 0001	1	0.79
000 0010	2	1.57
- - -	- - -	- - -
100 0000 (default)	64 (default)	50.4 (default)
- - -	- - -	- - -
111 1101	125	98.4
111 1110	126	99.2
111 1111	127	100

Copyright © 2024 Texas Instruments Incorporated

7.3.2.3 Individual 8-bit Dot Current (DC) Setting

The LP5866T can individually adjust the output current of each LED by using dot current function through DC setting. The device allows the brightness deviations of the LEDs to adjusted be individually. Each output DC is programmed with an 8-bit depth, so the value can be adjusted with 256 steps within the range from 0% to 100% of (I_{OUT_MAX} × CC/127).

表 7-3. Individual 8-bit Dot Current (DC) Setting

8-BIT DC REGISTER		RATIO OF OUTPUT CURRENT TO I_{OUT_MAX} × CC/127
Binary	Decimal	%
0000 0000	0	0
0000 0001	1	0.39
0000 0010	2	0.78
- - -	- - -	- - -
1000 0000 (Default)	128 (Default)	50.2 (Default)
- - -	- - -	- - -
1111 1101	253	99.2
1111 1110	254	99.6
1111 1111	255	100

In summary, the current gain of each current sink can be calculated as below:

$$I_{OUT}\ (mA) = I_{OUT_MAX} \times (CC/127) \times (DC/255) \quad (3)$$

For time-multiplexing scan scheme, if the scan number is N, each LED dot's average current I_{AVG} is shown as below:

$$I_{AVG}\ (mA) = I_{OUT}/N = I_{OUT_MAX} \times (CC/127) \times (DC/255)/N \quad (4)$$

7.3.3 PWM Dimming

There are several methods to control the PWM duty cycle of each LED dot.

7.3.3.1 Individual 8-Bit / 16-Bit PWM for Each LED Dot

Every LED has an individual 8-bit or 16-bit PWM register that is used to change the LED brightness by PWM duty. The LP5866T uses an enhanced spectrum PWM (ES-PWM) algoithm to achieve 16-bit depth with high refresh rate and this can avoid flicker under high speed camera. Comparing with conventional 8-bit PWM, 16-bit PWM can help to achieve ultimate high dimming resolution in LED animation applications.

7.3.3.2 Programmable Groups of 8-Bit PWM Dimming

The group PWM Control is used to select LEDs into 1 to 3 groups while each group has a separate register for PWM control. Every LED has 2-bit selection in LED_DOT_GROUP Registers (x = 0, 1, … , 29) to select whether the LED dot belongs to one of the three groups or not:

- 00: not a member of any group
- 01: member of group 1
- 10: member of group 2
- 11: member of group 3

7.3.3.3 8-Bit PWM for Global Dimming

The Global PWM Control function affects all LEDs simultaneously.

The final PWM duty cycle can be calculated as below:

$$\text{PWM_Final(8-bit)} = \text{PWM_Individual(8-bit)} \times \text{PWM_Group(8-bit)} \times \text{PWM_ Global(8-bit)} \quad (5)$$

$$\text{PWM_Final(16-bit)} = \text{PWM_Individual(16-bit)} \times \text{PWM_Group(8-bit)} \times \text{PWM_ Global(8-bit)} \quad (6)$$

The LP5866T supports 125kHz or 62.5kHz PWM output frequency. The PWM frequency is selected by configuring the 'PWM_Fre' in Dev_initial register. An internal 31.2MHz oscillator is used for generating PWM outputs. The oscillator's high accuracy design ($f_{OSC_ERR} \leq \pm 3\%$) enables a better synchronization if multiple LP5866T devices are connected together.

A PWM phase-shifting scheme is implemented in each current sink to avoid the current overshot when turning on simultaneously. As the LED drivers are not activated simultaneously, the peak load current from the pre-stage power supply is significantly decreased. This scheme also reduces input-current ripple and ceramic-capacitor audible ringing. LED drivers are grouped into three different phases. By configuring the 'PWM_Phase_Shift' in Dev_config1 register, which is default off, the LP5866T supports t_{phase_shift} = 125ns shifting time shown in 図 7-4.

- Phase 1: CS0, CS3, CS6, CS9, CS12, CS15.
- Phase 2: CS1, CS4, CS7, CS10, CS13, CS16.
- Phase 3: CS2, CS5, CS8, CS11, CS14, CS17.

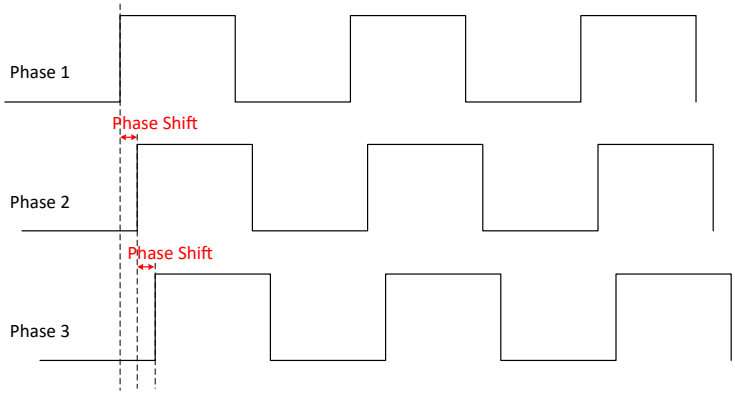

図 7-4. Phase Shift

Copyright © 2024 Texas Instruments Incorporated

To avoid high current sinks output ripple during line switching, current sinks can be configured to turn on with 1 clock delay (62.5ns or 31.25ns according to the PWM frequency) after lines turn on, as shown in 図 7-3. This function can be configured by 'CS_ON_Shift' in Dev_config1 register.

The LP5866T allows users to configure the dimming scale either exponentially (Gamma Correction) or linearly through the 'PWM_Scale_Mode' in Dev_config1 register. If a human-eye-friendly dimming curve is desired, using the internal fixed exponential scale is an easy approach. If a special dimming curve is desired, using the linear scale with software correction is recommended. The LP5866T supports both linear and exponential dimming curves under 8-bit and 16-bit PWM depth. 図 7-5 is an example of 8-bit PWM depth.

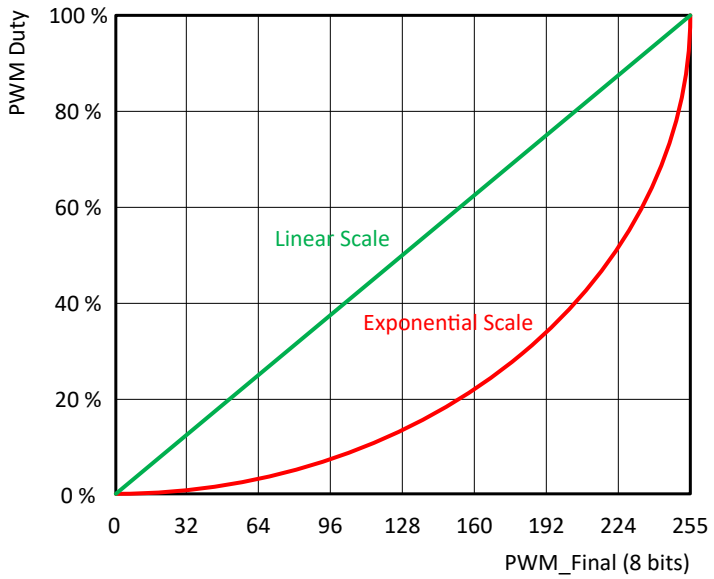

図 7-5. Linear and Exponential Dimming Curves

In summary, the PWM control method is illustrated as 図 7-6:

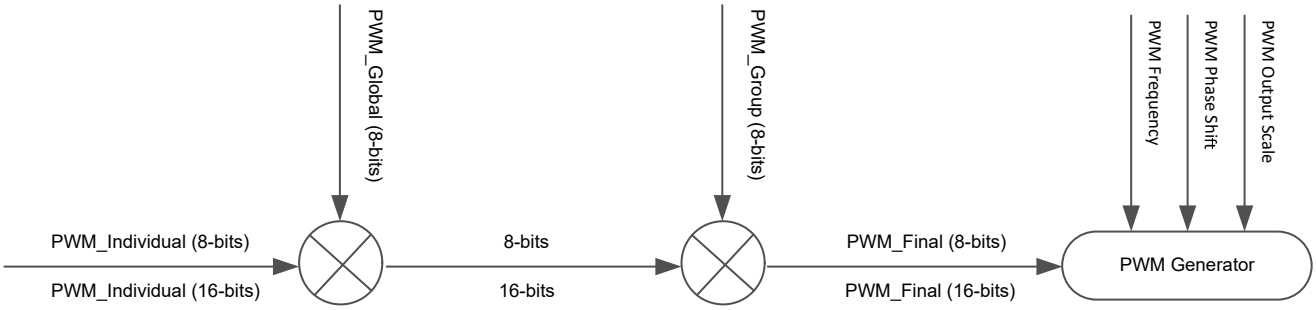

図 7-6. PWM Control Scheme

7.3.4 ON and OFF Control

The LP5866T device supports the individual ON and OFF control of each LED. For indication purpose, users can turn on and off the LED directly by writing 1-bit ON and OFF data to the corresponding Dot_onoffx (x = 0, 1, … , 17) register.

7.3.5 Data Refresh Mode

The LP5866T supports three data refresh modes: Mode 1, Mode 2, and Mode 3, by configuring 'Data_Ref_Mode' in Dev_initial register.

Mode 1: 8-bit PWM data without VSYNC command. Data is sent out for display instantly after received. With Mode1, users can refresh the corresponding dots' data only instead of updating the whole SRAM. It is called 'on demand data refresh', which can save the total data volume effectively. As shown in 図 7-7, the red LED dots can be refreshed after sending the corresponding data while the others kept the same with last frame.

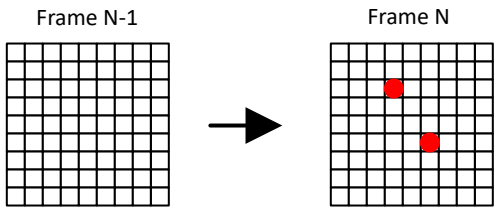

図 7-7. On Demand Data Refresh - Mode 1

Mode 2: 8-bit PWM data with VSYNC command. Data is held and sent out simultaneously by frame after receiving the VSYNC command.

Mode 3: 16-bit PWM data with VSYNC command. Data is held and sent out simultaneously by frame after receiving the VSYNC command.

Frame control is implemented in Mode 2 and Mode 3. Instead of refreshing the output instantly after data is received (Mode 1), the device holds the data and refreshes the whole frame data by a fixed frame rate, f_{VSYNC}. Usually, 24Hz, 50Hz, 60Hz, 120Hz or even higher frame rate is selected to achieve vivid animation effects. Whole SRAM Data Refresh is shown in 図 7-8, a new frame is updated after receiving the VSYNC command.

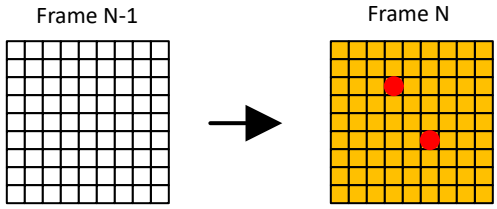

図 7-8. Whole SRAM Data Refresh

Copyright © 2024 Texas Instruments Incorporated

Comparing with Mode 1, Mode 2 and Mode 3 provide a better synchronization when multiple LP5866T devices used together. A high-level pulse width longer than t_{SYNC_H} is required at the beginning of each VSYNC frame. 図 7-9 shows the VSYNC connections and 図 7-10 shows the timing requirements.

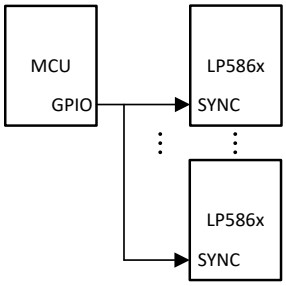

図 7-9. Multiple Devices Sync

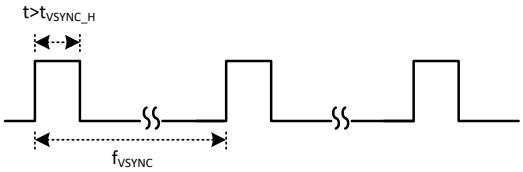

図 7-10. VSYNC Timing

Table 8-4 is the summary of the 3 data refresh modes.

表 7-4. Data Refresh Mode

MODE TYPE	PWM RESOLUTION	PWM OUTPUT	EXTERNAL VSYNC
Mode 1	8 Bits	Data update instantly	No
Mode 2	8 Bits	Data update by frame	Yes
Mode 3	16 Bits		

7.3.6 Full Addressable SRAM

SRAM is implemented inside the LP5866T device to support data writing and reading at the same time.

Although data refresh mechanisms are not the same for Mode 1 and Mode 2/3, the data writing and reading follow the same method. Uses can update partial of the SRAM data only or the whole SRAM page simultaneously. The LP5866T supports auto-increment function to minimize data traffic and increase data transfer efficiency.

Please be noted that 16-bit PWM (Mode 3) and 8-bit PWM (Mode 1 and Mode 2) are assigned with different SRAM addresses.

7.3.7 Protections and Diagnostics

7.3.7.1 LED Open Detection

The LP5866T includes LED open detection (LOD) for the fault caused by any opened LED dot. The threshold for LED open is 0.25V typical. LED open detection is only performed when PWM ≥ 25 (Mode 1 and Mode 2) or PWM ≥ 6400 (Mode 3) and voltage on CSn is detected lower than open threshold for continuously 4 sub-periods.

図 7-11 shows the detection circuit of LOD function. When open fault is detected, 'Global_LOD' bit in Fault_state register is set to 1 and detailed fault state for each LED is also monitored in register Dot_lodx (x = 0, 1, … , 17). All open fault indicator bits can be cleared by setting LOD_clear = 0Fh after the open condition is removed.

LOD removal function can be enabled by setting 'LOD_removal' bit in Dev_config2 register to 1. This function turns off the current sink of the open channel when scanning to the line where the opened LED is included.

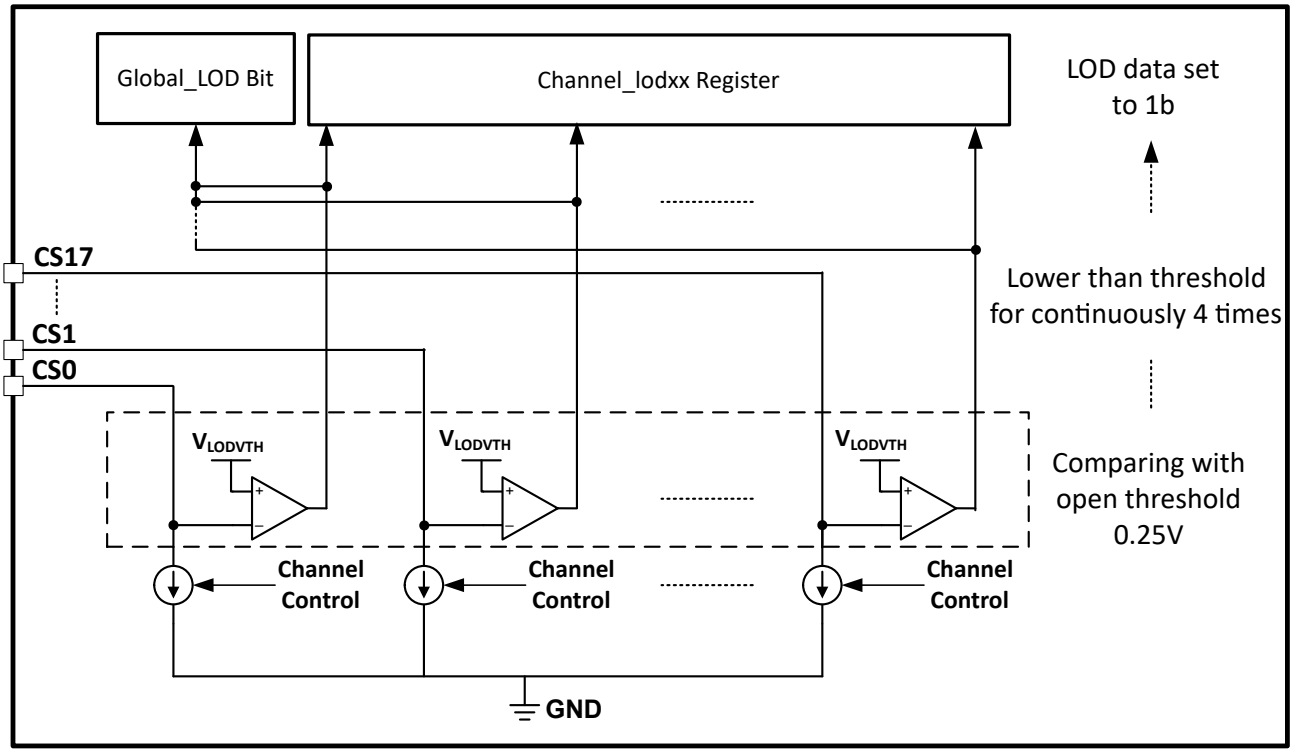

図 7-11. LOD Circuits

Copyright © 2024 Texas Instruments Incorporated

7.3.7.2 LED Short Detection

The LP5866T includes LED short detection (LSD) for the fault caused by any shorted LED. Threshold for channel short is (VLED – 1) V typical. LED short detection only performed when PWM ≥ 25 (Mode 1 and Mode 2) or PWM ≥ 6400 (Mode 3) and voltage on CSn is detected higher than short threshold for continuously 4 sub-periods. As there is parasitic capacitance for the current sink, to make sure the LSD result is correct, setting the LED current higher than 0.5mA is recommended.

The image below shows the detection circuit of LSD function. When short fault is detected, 'Global_LSD bit' in Fault_state register is set to 1 and detailed fault state for every channel are also monitored in register Dot_lsdx (x = 0, 1, … , 17). All short fault indicator bits can be cleared by setting LSD_clear = 0Fh after the short condition is removed.

LSD removal function can be enabled by setting 'LSD_removal' bit in Dev_config2 register to 1. This function turns off the upside deghosting function of the scan line where short LED is included.

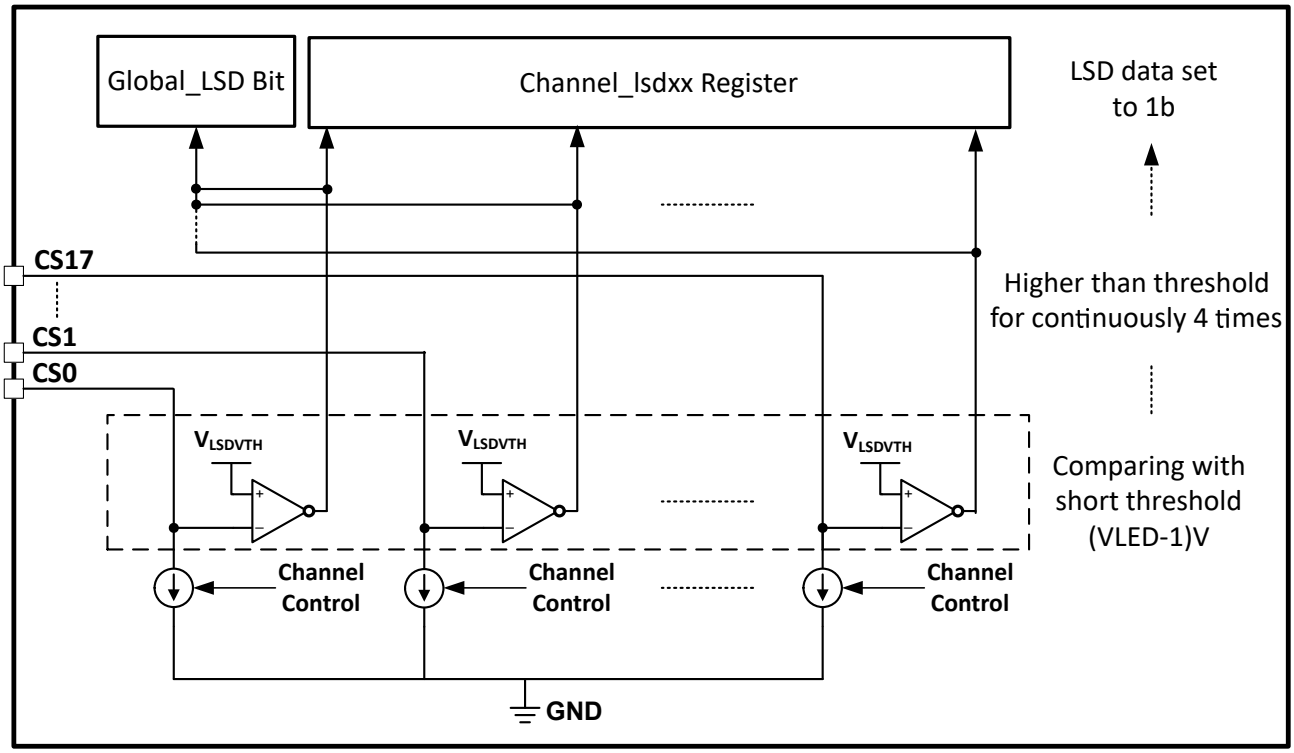

図 7-12. LSD Circuit

7.3.7.3 Thermal Shutdown

The LP5866T device implements thermal shutdown mechanism to protect the device from damage due to overheating. When the junction temperature rises to 160°C (typical) and above, the device switches into shutdown mode. The LP5866T exits thermal shutdown when the junction temperature of the device drops to 145°C (typical) and below.

7.3.7.4 UVLO (Under Voltage Lock Out)

The LP5866T has an internal comparator that monitors the voltage at VCC. When VCC is below V_{UVF}, reset is active and the LP5866T enters INITIALIZATION state.

7.4 Device Functional Modes

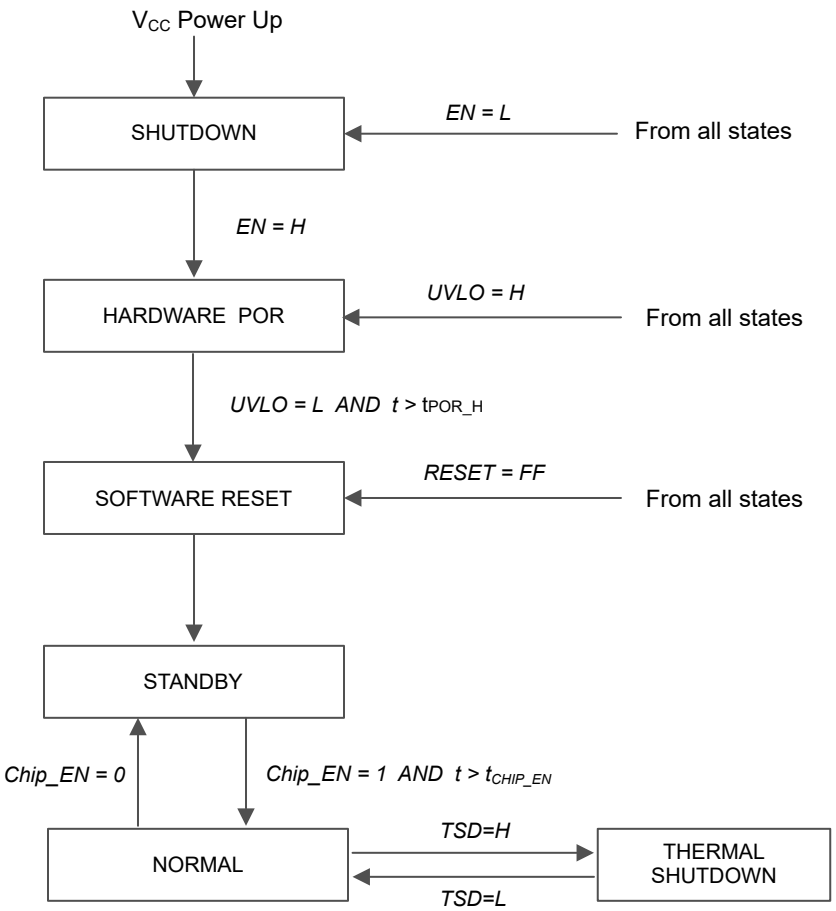

図 7-13. Device Functional Modes

- SHUTDOWN: The device enters into SHUTDOWN mode from all states on VCC power up or EN pin is low.
- HARDWARE POR: The device enters into HARDWARE POR when Enable pin is high or VCC fall under V_{UVF} causing UVLO=H from all states.
- SOFTWARE RESET: The device enters into SOFTWARE RESET mode when VCC rise higher than V_{UVR} with the time t > t_{POR_H}. In this mode, all the registers are reset. Entry can also be from any state when the RESET (register) = FFh or UVLO is low.
- STANDBY: The device enters the STANDBY mode when Chip_EN (register) = 0. In this mode, device enters into low power mode, but the I^2C/SPI are still available for Chip_EN only and the registers' data are retained.
- NORMAL: The device enters the NORMAL mode when 'Chip_EN' = 1 with the time t > t_{CHIP_EN}.
- THERMAL SHUTDOWN: The device automatically enters the THERMAL SHUTDOWN mode when the junction temperature exceeds 160°C (typical). If the junction temperature decreases below 145°C (typical), the device returns to the NORMAL mode.

Copyright © 2024 Texas Instruments Incorporated

7.5 Programming

7.5.1 Interface Selection

The LP5866T supports two communication interfaces: I^{2}C and SPI. If IFS is high, ithe device enters into SPI mode. If IFS is low, the device enters into I^{2}C mode.

表 7-5. Interface Selection

INTERFACE TYPE	ENTRY CONDITION
I^{2}C	IFS = Low
SPI	IFS = High

7.5.2 I^{2}C Interface

The LP5866T is compatible with I^{2}C standard specification. The device supports both fast mode (400KHz maximum) and fast plus mode (1MHz maximum).

7.5.2.1 I^{2}C Data Transactions

The data on SDA line must be stable during the HIGH period of the clock signal (SCL). In other words, state of the data line can only be changed when clock signal is LOW. START and STOP conditions classify the beginning and the end of the data transfer session. A START condition is defined as the SDA signal transitioning from HIGH to LOW while SCL line is HIGH. A STOP condition is defined as the SDA transitioning from LOW to HIGH while SCL is HIGH. The bus leader always generates START and STOP conditions. The bus is considered to be busy after a START condition and free after a STOP condition. During data transmission, the bus leader can generate repeated START conditions. First START and repeated START conditions are functionally equivalent.

Each byte of data has to be followed by an acknowledge bit. The acknowledge related clock pulse is generated by the leader. The leader releases the SDA line (HIGH) during the acknowledge clock pulse. The device pulls down the SDA line during the 9th clock pulse, signifying an acknowledge. The device generates an acknowledge after each byte has been received.

There is one exception to the acknowledge after every byte rule. When the leader is the receiver, it must indicate to the transmitter an end of data by not acknowledging (*negative acknowledge*) the last byte clocked out of the follower. This negative acknowledge still includes the acknowledge clock pulse (generated by the leader), but the SDA line is not pulled down.

7.5.2.2 I²C Data Format

The address and data bits are transmitted MSB first with 8-bits length format in each cycle. Each transmission is started with Address Byte 1, which are divided into 5-bits of the chip address, 2 higher bits of the register address, and 1 read/write bit. The other 8 lower bits of register address are put in Address Byte 2.The device supports both independent mode and broadcast mode. The auto-increment feature allows writing / reading several consecutive registers within one transmission. If not consecutive, a new transmission must be started.

表 7-6. I²C Data Format

Address Byte1	Chip Address					Register Address		R/W
	Bit 7	Bit 6	Bit 5	Bit 4	Bit 3	Bit 2	Bit 1	Bit 0
Independent	1	0	0	ADDR1	ADDR0	9th bit	8th bit	R: 1 W: 0
Broadcast	1	0	1	0	1			
Address Byte2	Register Address							
	Bit 7	Bit 6	Bit 5	Bit 4	Bit 3	Bit 2	Bit 1	Bit 0
	7th bit	6th bit	5th bit	4th bit	3th bit	2th bit	1th bit	0th bit

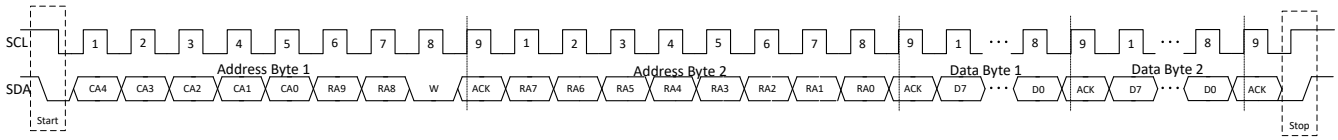

図 7-14. I²C Write Timming

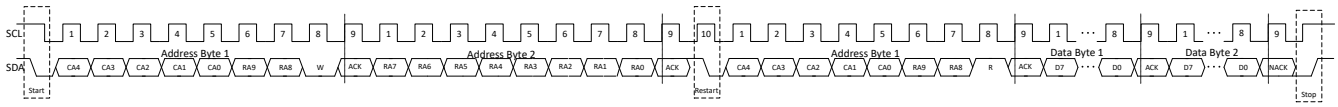

図 7-15. I²C Read Timing

Copyright © 2024 Texas Instruments Incorporated

7.5.2.3 Multiple Devices Connection

The LP5866T enters into I²C mode if IFS is connected to GND. The ADDR0/1 pin is used to select the unique I²C follower address for each device. The SCL and SDA lines must each have a pullup resistor (4.7KΩ for 400KHz, 2KΩ for 1MHz) placed somewhere on the line and remain HIGH even when the bus is idle. VIO_EN can either be connected with VIO power supply or GPIO. It's suggested to put one 1nF cap as closer to VIO_EN pin as possible. Up to four LP5866T follower devices can share the same I²C bus by the different ADDR configurations.

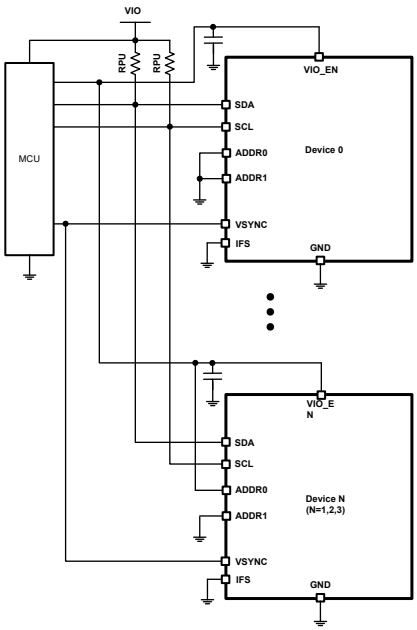

図 7-16. I²C Multiple Devices Connection

7.5.3 Programming

7.5.3.1 SPI Data Transactions

MISO output is normally in a high impedance state. When the follower-select pin SS for the device is active (low) the MISO output is pulled low for read only. During write cycle MISO stays in high-impedance state. The follower-select signal SS must be low during the cycle transmission. SS resets the interface when high. Data is clocked in on the rising edge of the SCLK clock signal, while data is clocked out on the falling edge of SCLK.

7.5.3.2 SPI Data Format

The address and data bits are transmitted MSB first with 8-bits length format in each cycle. Each transmission is started with Address Byte 1, which contains 8 higher bits of the register address. The Address Byte 2 is started with 2 lower bits of the register address and 1 read/write bit. The auto-increment feature allows writing / reading several consecutive registers within one transmission. If not consecutive, a new transmission must be started.

表 7-7. SPI Data Format

Address Byte1	**Register Address**							
	Bit 7	**Bit 6**	**Bit 5**	**Bit 4**	**Bit 3**	**Bit 2**	**Bit 1**	**Bit 0**
	9th bit	8th bit	7th bit	6th bit	5th bit	4th bit	3th bit	2th bit
Address Byte2	**Register Address**							
	Bit 7	**Bit 6**	**Bit 5**	**Bit 4**	**Bit 3**	**Bit 2**	**Bit 1**	**Bit 0**
	1th bit	0th bit	R: 0 W: 1	Don't Care				

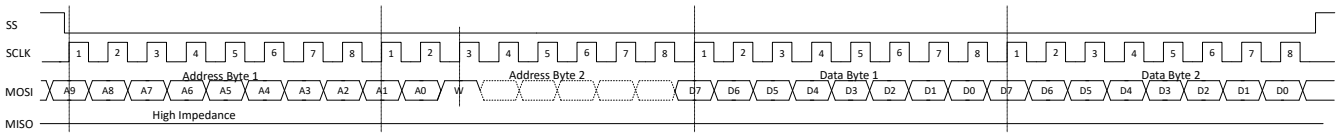

図 7-17. SPI Write Timing

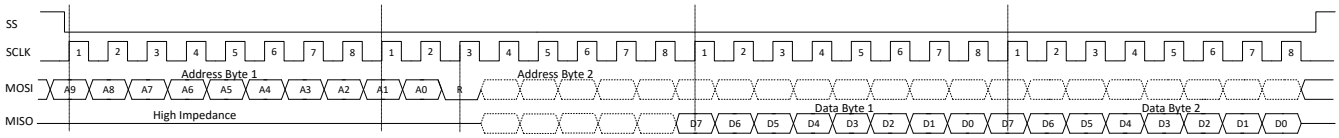

図 7-18. SPI Read Timing

Copyright © 2024 Texas Instruments Incorporated

7.5.3.3 Multiple Devices Connection

The device enters into SPI mode if IFS is pulled high to VIO through a pullup resistor(4.7KΩ recommended). VIO_EN can either be connected with VIO power supply or GPIO. It's suggested to put one 1nF cap as closer to VIO_EN pin as possible. In SPI mode host can address as many devices as there are follower select pins on host.

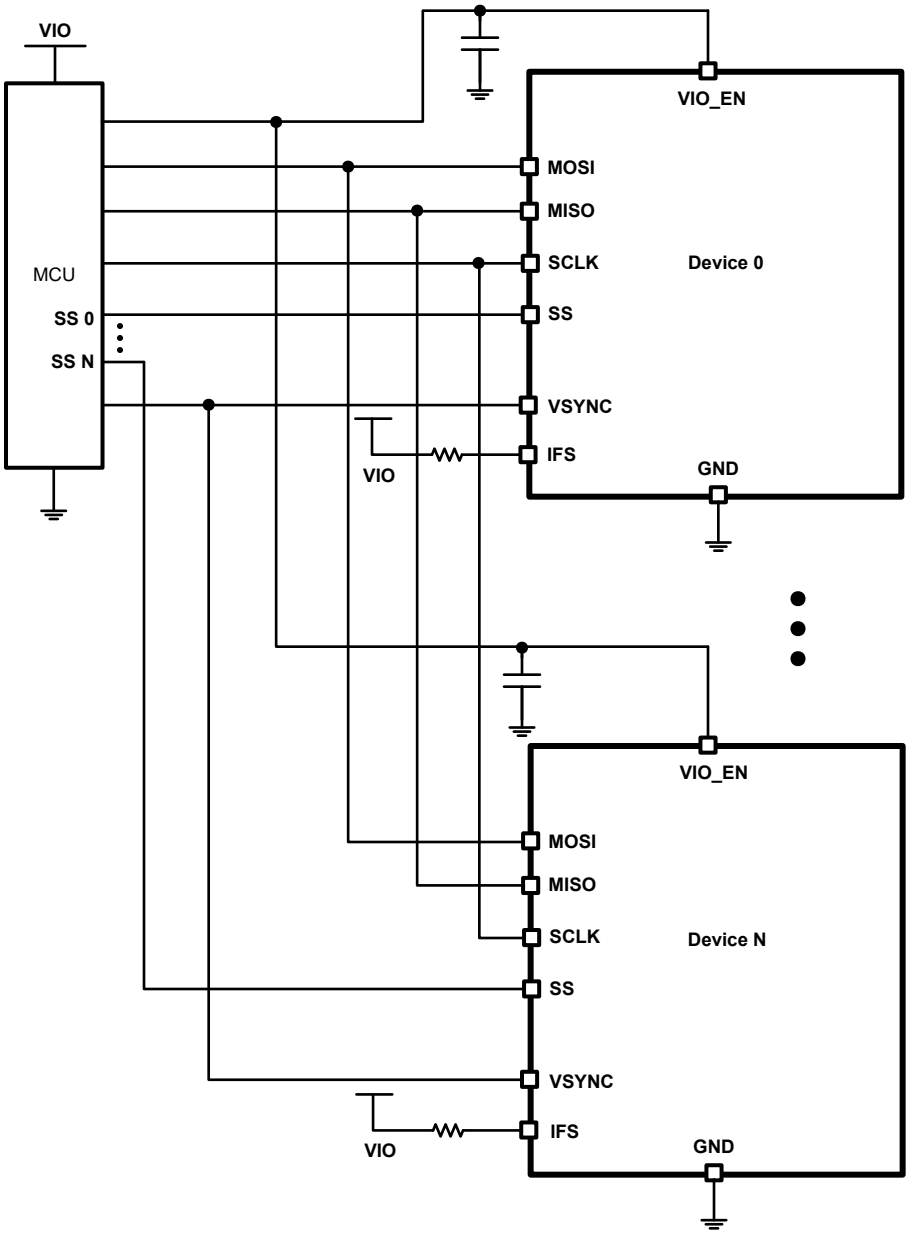

図 7-19. SPI Multiple Devices Connection

7.6 Register Maps

This section provides a summary of the register maps. For detailed register functions and descriptions, please refer to *LP5866T 11x18 LED Matrix Driver Register Maps*.

表 7-8. Register Section/Block Access Type Codes

Access Type	Code	Description
Read Type		
R	R	Read
RC	R C	Read to Clear
R-0	R -0	Read Returns 0
Write Type		
W	W	Write
W0CP	W 0C P	W 0 to clear Requires privileged access
Reset or Default Value		
-n		Value after reset or the default value

Register Acronym	Address	Type	D7	D6	D5	D4	D3	D2	D1	D0	Default
Chip_en	000h	R/W	Reserved							Chip_EN	00h
Dev_initial	001h	R/W	Reserved	Max_Line_Num				Data_Ref_Mode		PWM_Fre	5Eh
Dev_config1	002h	R/W	Reserved	Reserved	Reserved	Reserved	SW_BLK	PWM_Scale_Mode	PWM_Phase_Shift	CS_ON_Shift	00h
Dev_config2	003h	R/W	Comp_Group3		Comp_Group2		Comp_Group1		LOD_removal	LSD_removal	00h
Dev_config3	004h	R/W	Down_Deghost		Up_Deghost		Maximum_Current			Up_Deghost_enable	47h
Global_bri	005h	R/W	PWM_Global								FFh
Group0_bri	006h	R/W	PWM_Group1								FFh
Group1_bri	007h	R/W	PWM_Group2								FFh
Group2_bri	008h	R/W	PWM_Group3								FFh
R_current_set	009h	R/W	Reserved	CC_Group1							40h
G_current_set	00Ah	R/W	Reserved	CC_Group2							40h
B_current_set	00Bh	R/W	Reserved	CC_Group3							40h
Dot_grp_sel0	00Ch	R/W	Dot L0-CS3 group		Dot L0-CS2 group		Dot L0-CS1 group		Dot L0-CS0 group		00h
Dot_grp_sel1	00Dh	R/W	Dot L0-CS7 group		Dot L0-CS6 group		Dot L0-CS5 group		Dot L0-CS4 group		00h
Dot_grp_sel2	00Eh	R/W	Dot L0-CS11 group		Dot L0-CS10 group		Dot L0-CS9 group		Dot L0-CS8 group		00h
Dot_grp_sel3	00Fh	R/W	Dot L0-CS15 group		Dot L0-CS14 group		Dot L0-CS13 group		Dot L0-CS12 group		00h
Dot_grp_sel4	010h	R/W	Reserved				Dot L0-CS17 group		Dot L0-CS16 group		00h
Dot_grp_sel5	011h	R/W	Dot L1-CS3 group		Dot L1-CS2 group		Dot L1-CS1 group		Dot L1-CS0 group		00h
Dot_grp_sel6	012h	R/W	Dot L1-CS7 group		Dot L1-CS6 group		Dot L1-CS5 group		Dot L1-CS4 group		00h
Dot_grp_sel7	013h	R/W	Dot L1-CS11 group		Dot L1-CS10 group		Dot L1-CS9 group		Dot L1-CS8 group		00h
Dot_grp_sel8	014h	R/W	Dot L1-CS15 group		Dot L1-CS14 group		Dot L1-CS13 group		Dot L1-CS12 group		00h
Dot_grp_sel9	015h	R/W	Reserved				Dot L1-CS17 group		Dot L1-CS16 group		00h
Dot_grp_sel10	016h	R/W	Dot L2-CS3 group		Dot L2-CS2 group		Dot L2-CS1 group		Dot L2-CS0 group		00h

Copyright © 2024 Texas Instruments Incorporated

Register Acronym	Address	Type	D7	D6	D5	D4	D3	D2	D1	D0	Default
Dot_grp_sel11	017h	R/W	Dot L2-CS7 group		Dot L2-CS6 group		Dot L2-CS5 group		Dot L2-CS4 group		00h
Dot_grp_sel12	018h	R/W	Dot L2-CS11 group		Dot L2-CS10 group		Dot L2-CS9 group		Dot L2-CS8 group		00h
Dot_grp_sel13	019h	R/W	Dot L2-CS15 group		Dot L2-CS14 group		Dot L2-CS13 group		Dot L2-CS12 group		00h
Dot_grp_sel14	01Ah	R/W	Reserved				Dot L2-CS17 group		Dot L2-CS16 group		00h
Dot_grp_sel15	01Bh	R/W	Dot L3-CS3 group		Dot L3-CS2 group		Dot L3-CS1 group		Dot L3-CS0 group		00h
Dot_grp_sel16	01Ch	R/W	Dot L3-CS7 group		Dot L3-CS6 group		Dot L3-CS5 group		Dot L3-CS4 group		00h
Dot_grp_sel17	01Dh	R/W	Dot L3-CS11 group		Dot L3-CS10 group		Dot L3-CS9 group		Dot L3-CS8 group		00h
Dot_grp_sel18	01Eh	R/W	Dot L3-CS15 group		Dot L3-CS14 group		Dot L3-CS13 group		Dot L3-CS12 group		00h
Dot_grp_sel19	01Fh	R/W	Reserved				Dot L3-CS17 group		Dot L3-CS16 group		00h
Dot_grp_sel20	020h	R/W	Dot L4-CS3 group		Dot L4-CS2 group		Dot L4-CS1 group		Dot L4-CS0 group		00h
Dot_grp_sel21	021h	R/W	Dot L4-CS7 group		Dot L4-CS6 group		Dot L4-CS5 group		Dot L4-CS4 group		00h
Dot_grp_sel22	022h	R/W	Dot L4-CS11 group		Dot L4-CS10 group		Dot L4-CS9 group		Dot L4-CS8 group		00h
Dot_grp_sel23	023h	R/W	Dot L4-CS15 group		Dot L4-CS14 group		Dot L4-CS13 group		Dot L4-CS12 group		00h
Dot_grp_sel24	024h	R/W	Reserved				Dot L4-CS17 group		Dot L4-CS16 group		00h
Dot_grp_sel25	025h	R/W	Dot L5-CS3 group		Dot L5-CS2 group		Dot L5-CS1 group		Dot L5-CS0 group		00h
Dot_grp_sel26	026h	R/W	Dot L5-CS7 group		Dot L5-CS6 group		Dot L5-CS5 group		Dot L5-CS4 group		00h
Dot_grp_sel27	027h	R/W	Dot L5-CS11 group		Dot L5-CS10 group		Dot L5-CS9 group		Dot L5-CS8 group		00h
Dot_grp_sel28	028h	R/W	Dot L5-CS15 group		Dot L5-CS14 group		Dot L5-CS13 group		Dot L5-CS12 group		00h
Dot_grp_sel29	029h	R/W	Reserved				Dot L5-CS17 group		Dot L5-CS16 group		00h
Dot_onoff0	043h	R/W	Dot L0-CS7 onoff	Dot L0-CS6 onoff	Dot L0-CS5 onoff	Dot L0-CS4 onoff	Dot L0-CS3 onoff	Dot L0-CS2 onoff	Dot L0-CS1 onoff	Dot L0-CS0 onoff	FFh
Dot_onoff1	044h	R/W	Dot L0-CS15 onoff	Dot L0-CS14 onoff	Dot L0-CS13 onoff	Dot L0-CS12 onoff	Dot L0-CS11 onoff	Dot L0-CS10 onoff	Dot L0-CS9 onoff	Dot L0-CS8 onoff	FFh
Dot_onoff2	045h	R/W	Reserved						Dot L0-CS17 onoff	Dot L0-CS16 onoff	03h
Dot_onoff3	046h	R/W	Dot L1-CS7 onoff	Dot L1-CS6 onoff	Dot L1-CS5 onoff	Dot L1-CS4 onoff	Dot L1-CS3 onoff	Dot L1-CS2 onoff	Dot L1-CS1 onoff	Dot L1-CS0 onoff	FFh
Dot_onoff4	047h	R/W	Dot L1-CS15 onoff	Dot L1-CS14 onoff	Dot L1-CS13 onoff	Dot L1-CS12 onoff	Dot L1-CS11 onoff	Dot L1-CS10 onoff	Dot L1-CS9 onoff	Dot L1-CS8 onoff	FFh
Dot_onoff5	048h	R/W	Reserved						Dot L1-CS17 onoff	Dot L1-CS16 onoff	03h
Dot_onoff6	049h	R/W	Dot L2-CS7 onoff	Dot L2-CS6 onoff	Dot L2-CS5 onoff	Dot L2-CS4 onoff	Dot L2-CS3 onoff	Dot L2-CS2 onoff	Dot L2-CS1 onoff	Dot L2-CS0 onoff	FFh
Dot_onoff7	04Ah	R/W	Dot L2-CS15 onoff	Dot L2-CS14 onoff	Dot L2-CS13 onoff	Dot L2-CS12 onoff	Dot L2-CS11 onoff	Dot L2-CS10 onoff	Dot L2-CS9 onoff	Dot L2-CS8 onoff	FFh
Dot_onoff8	04Bh	R/W	Reserved						Dot L2-CS17 onoff	Dot L2-CS16 onoff	03h
Dot_onoff9	04Ch	R/W	Dot L3-CS7 onoff	Dot L3-CS6 onoff	Dot L3-CS5 onoff	Dot L3-CS4 onoff	Dot L3-CS3 onoff	Dot L3-CS2 onoff	Dot L3-CS1 onoff	Dot L3-CS0 onoff	FFh
Dot_onoff10	04Dh	R/W	Dot L3-CS15 onoff	Dot L3-CS14 onoff	Dot L3-CS13 onoff	Dot L3-CS12 onoff	Dot L3-CS11 onoff	Dot L3-CS10 onoff	Dot L3-CS9 onoff	Dot L3-CS8 onoff	FFh
Dot_onoff11	04Eh	R/W	Reserved						Dot L3-CS17 onoff	Dot L3-CS16 onoff	03h

Register Acronym	Address	Type	D7	D6	D5	D4	D3	D2	D1	D0	Default
Dot_onoff12	04Fh	R/W	Dot L4-CS7 onoff	Dot L4-CS6 onoff	Dot L4-CS5 onoff	Dot L4-CS4 onoff	Dot L4-CS3 onoff	Dot L4-CS2 onoff	Dot L4-CS1 onoff	Dot L4-CS0 onoff	FFh
Dot_onoff13	050h	R/W	Dot L4-CS15 onoff	Dot L4-CS14 onoff	Dot L4-CS13 onoff	Dot L4-CS12 onoff	Dot L4-CS11 onoff	Dot L4-CS10 onoff	Dot L4-CS9 onoff	Dot L4-CS8 onoff	FFh
Dot_onoff14	051h	R/W	Reserved						Dot L4-CS17 onoff	Dot L4-CS16 onoff	03h
Dot_onoff15	052h	R/W	Dot L5-CS7 onoff	Dot L5-CS6 onoff	Dot L5-CS5 onoff	Dot L5-CS4 onoff	Dot L5-CS3 onoff	Dot L5-CS2 onoff	Dot L5-CS1 onoff	Dot L5-CS0 onoff	FFh
Dot_onoff16	053h	R/W	Dot L5-CS15 onoff	Dot L5-CS14 onoff	Dot L5-CS13 onoff	Dot L5-CS12 onoff	Dot L5-CS11 onoff	Dot L5-CS10 onoff	Dot L5-CS9 onoff	Dot L5-CS8 onoff	FFh
Dot_onoff17	054h	R/W	Reserved						Dot L5-CS17 onoff	Dot L5-CS16 onoff	03h
Fault_state	064h	R	Reserved						Global_LOD	Global_LSD	00h
Dot_lod0	065h	R	Dot L0-CS7 LOD	Dot L0-CS6 LOD	Dot L0-CS5 LOD	Dot L0-CS4 LOD	Dot L0-CS3 LOD	Dot L0-CS2 LOD	Dot L0-CS1 LOD	Dot L0-CS0 LOD	00h
Dot_lod1	066h	R	Dot L0-CS15 LOD	Dot L0-CS14 LOD	Dot L0-CS13 LOD	Dot L0-CS12 LOD	Dot L0-CS11 LOD	Dot L0-CS10 LOD	Dot L0-CS9 LOD	Dot L0-CS8 LOD	00h
Dot_lod2	067h	R	Reserved						Dot L0-CS17 LOD	Dot L0-CS16 LOD	00h
Dot_lod3	068h	R	Dot L1-CS7 LOD	Dot L1-CS6 LOD	Dot L1-CS5 LOD	Dot L1-CS4 LOD	Dot L1-CS3 LOD	Dot L1-CS2 LOD	Dot L1-CS1 LOD	Dot L1-CS0 LOD	00h
Dot_lod4	069h	R	Dot L1-CS15 LOD	Dot L1-CS14 LOD	Dot L1-CS13 LOD	Dot L1-CS12 LOD	Dot L1-CS11 LOD	Dot L1-CS10 LOD	Dot L1-CS9 LOD	Dot L1-CS8 LOD	00h
Dot_lod5	06Ah	R	Reserved						Dot L1-CS17 LOD	Dot L1-CS16 LOD	00h
Dot_lod6	06Bh	R	Dot L2-CS7 LOD	Dot L2-CS6 LOD	Dot L2-CS5 LOD	Dot L2-CS4 LOD	Dot L2-CS3 LOD	Dot L2-CS2 LOD	Dot L2-CS1 LOD	Dot L2-CS0 LOD	00h
Dot_lod7	06Ch	R	Dot L2-CS15 LOD	Dot L2-CS14 LOD	Dot L2-CS13 LOD	Dot L2-CS12 LOD	Dot L2-CS11 LOD	Dot L2-CS10 LOD	Dot L2-CS9 LOD	Dot L2-CS8 LOD	00h
Dot_lod8	06Dh	R	Reserved						Dot L2-CS17 LOD	Dot L2-CS16 LOD	00h
Dot_lod9	06Eh	R	Dot L3-CS7 LOD	Dot L3-CS6 LOD	Dot L3-CS5 LOD	Dot L3-CS4 LOD	Dot L3-CS3 LOD	Dot L3-CS2 LOD	Dot L3-CS1 LOD	Dot L3-CS0 LOD	00h
Dot_lod10	06Fh	R	Dot L3-CS15 LOD	Dot L3-CS14 LOD	Dot L3-CS13 LOD	Dot L3-CS12 LOD	Dot L3-CS11 LOD	Dot L3-CS10 LOD	Dot L3-CS9 LOD	Dot L3-CS8 LOD	00h
Dot_lod11	070h	R	Reserved						Dot L3-CS17 LOD	Dot L3-CS16 LOD	00h
Dot_lod12	071h	R	Dot L4-CS7 LOD	Dot L4-CS6 LOD	Dot L4-CS5 LOD	Dot L4-CS4 LOD	Dot L4-CS3 LOD	Dot L4-CS2 LOD	Dot L4-CS1 LOD	Dot L4-CS0 LOD	00h
Dot_lod13	072h	R	Dot L4-CS15 LOD	Dot L4-CS14 LOD	Dot L4-CS13 LOD	Dot L4-CS12 LOD	Dot L4-CS11 LOD	Dot L4-CS10 LOD	Dot L4-CS9 LOD	Dot L4-CS8 LOD	00h

Copyright © 2024 Texas Instruments Incorporated

Register Acronym	Address	Type	D7	D6	D5	D4	D3	D2	D1	D0	Default
Dot_lod14	073h	R	Reserved						Dot L4-CS17 LOD	Dot L4-CS16 LOD	00h
Dot_lod15	074h	R	Dot L5-CS7 LOD	Dot L5-CS6 LOD	Dot L5-CS5 LOD	Dot L5-CS4 LOD	Dot L5-CS3 LOD	Dot L5-CS2 LOD	Dot L5-CS1 LOD	Dot L5-CS0 LOD	00h
Dot_lod16	075h	R	Dot L5-CS15 LOD	Dot L5-CS14 LOD	Dot L5-CS13 LOD	Dot L5-CS12 LOD	Dot L5-CS11 LOD	Dot L5-CS10 LOD	Dot L5-CS9 LOD	Dot L5-CS8 LOD	00h
Dot_lod17	076h	R	Reserved						Dot L5-CS17 LOD	Dot L5-CS16 LOD	00h
Dot_lsd0	086h	R	Dot L0-CS7 LSD	Dot L0-CS6 LSD	Dot L0-CS5 LSD	Dot L0-CS4 LSD	Dot L0-CS3 LSD	Dot L0-CS2 LSD	Dot L0-CS1 LSD	Dot L0-CS0 LSD	00h
Dot_lsd1	087h	R	Dot L0-CS15 LSD	Dot L0-CS14 LSD	Dot L0-CS13 LSD	Dot L0-CS12 LSD	Dot L0-CS11 LSD	Dot L0-CS10 LSD	Dot L0-CS9 LSD	Dot L0-CS8 LSD	00h
Dot_lsd2	088h	R	Reserved						Dot L0-CS17 LSD	Dot L0-CS16 LSD	00h
Dot_lsd3	089h	R	Dot L1-CS7 LSD	Dot L1-CS6 LSD	Dot L1-CS5 LSD	Dot L1-CS4 LSD	Dot L1-CS3 LSD	Dot L1-CS2 LSD	Dot L1-CS1 LSD	Dot L1-CS0 LSD	00h
Dot_lsd4	08Ah	R	Dot L1-CS15 LSD	Dot L1-CS14 LSD	Dot L1-CS13 LSD	Dot L1-CS12 LSD	Dot L1-CS11 LSD	Dot L1-CS10 LSD	Dot L1-CS9 LSD	Dot L1-CS8 LSD	00h
Dot_lsd5	08Bh	R	Reserved						Dot L1-CS17 LSD	Dot L1-CS16 LSD	00h
Dot_lsd6	08Ch	R	Dot L2-CS7 LSD	Dot L2-CS6 LSD	Dot L2-CS5 LSD	Dot L2-CS4 LSD	Dot L2-CS3 LSD	Dot L2-CS2 LSD	Dot L2-CS1 LSD	Dot L2-CS0 LSD	00h
Dot_lsd7	08Dh	R	Dot L2-CS15 LSD	Dot L2-CS14 LSD	Dot L2-CS13 LSD	Dot L2-CS12 LSD	Dot L2-CS11 LSD	Dot L2-CS10 LSD	Dot L2-CS9 LSD	Dot L2-CS8 LSD	00h
Dot_lsd8	08Eh	R	Reserved						Dot L2-CS17 LSD	Dot L2-CS16 LSD	00h
Dot_lsd9	08Fh	R	Dot L3-CS7 LSD	Dot L3-CS6 LSD	Dot L3-CS5 LSD	Dot L3-CS4 LSD	Dot L3-CS3 LSD	Dot L3-CS2 LSD	Dot L3-CS1 LSD	Dot L3-CS0 LSD	00h
Dot_lsd10	090h	R	Dot L3-CS15 LSD	Dot L3-CS14 LSD	Dot L3-CS13 LSD	Dot L3-CS12 LSD	Dot L3-CS11 LSD	Dot L3-CS10 LSD	Dot L3-CS9 LSD	Dot L3-CS8 LSD	00h
Dot_lsd11	091h	R	Reserved						Dot L3-CS17 LSD	Dot L3-CS16 LSD	00h
Dot_lsd12	092h	R	Dot L4-CS7 LSD	Dot L4-CS6 LSD	Dot L4-CS5 LSD	Dot L4-CS4 LSD	Dot L4-CS3 LSD	Dot L4-CS2 LSD	Dot L4-CS1 LSD	Dot L4-CS0 LSD	00h
Dot_lsd13	093h	R	Dot L4-CS15 LSD	Dot L4-CS14 LSD	Dot L4-CS13 LSD	Dot L4-CS12 LSD	Dot L4-CS11 LSD	Dot L4-CS10 LSD	Dot L4-CS9 LSD	Dot L4-CS8 LSD	00h
Dot_lsd14	094h	R	Reserved						Dot L4-CS17 LSD	Dot L4-CS16 LSD	00h
Dot_lsd15	095h	R	Dot L5-CS7 LSD	Dot L5-CS6 LSD	Dot L5-CS5 LSD	Dot L5-CS4 LSD	Dot L5-CS3 LSD	Dot L5-CS2 LSD	Dot L5-CS1 LSD	Dot L5-CS0 LSD	00h
Dot_lsd16	096h	R	Dot L5-CS15 LSD	Dot L5-CS14 LSD	Dot L5-CS13 LSD	Dot L5-CS12 LSD	Dot L5-CS11 LSD	Dot L5-CS10 LSD	Dot L5-CS9 LSD	Dot L5-CS8 LSD	00h

Copyright © 2024 Texas Instruments Incorporated

Register Acronym	Address	Type	D7	D6	D5	D4	D3	D2	D1	D0	Default
Dot_lsd17	097h	R	Reserved						Dot L5-CS17 LSD	Dot L5-CS16 LSD	00h
LOD_clear	0A7h	W	Reserved				LOD_Clear				00h
LSD_clear	0A8h	W	Reserved				LSD_Clear				00h
Reset	0A9h	W	Reset								00h
DC0	100h	R/W	LED dot current setting for Dot L0-CS0								80h
DC1	101h	R/W	LED dot current setting for Dot L0-CS1								80h
DC2	102h	R/W	LED dot current setting for Dot L0-CS2								80h
DC3	103h	R/W	LED dot current setting for Dot L0-CS3								80h
DC4	104h	R/W	LED dot current setting for Dot L0-CS4								80h
DC5	105h	R/W	LED dot current setting for Dot L0-CS5								80h
DC6	106h	R/W	LED dot current setting for Dot L0-CS6								80h
DC7	107h	R/W	LED dot current setting for Dot L0-CS7								80h
DC8	108h	R/W	LED dot current setting for Dot L0-CS8								80h
DC9	109h	R/W	LED dot current setting for Dot L0-CS9								80h
DC10	10Ah	R/W	LED dot current setting for Dot L0-CS10								80h
DC11	10Bh	R/W	LED dot current setting for Dot L0-CS11								80h
DC12	10Ch	R/W	LED dot current setting for Dot L0-CS12								80h
DC13	10Dh	R/W	LED dot current setting for Dot L0-CS13								80h
DC14	10Eh	R/W	LED dot current setting for Dot L0-CS14								80h
DC15	10Fh	R/W	LED dot current setting for Dot L0-CS15								80h
DC16	110h	R/W	LED dot current setting for Dot L0-CS16								80h
DC17	111h	R/W	LED dot current setting for Dot L0-CS17								80h
DC18	112h	R/W	LED dot current setting for Dot L1-CS0								80h
DC19	113h	R/W	LED dot current setting for Dot L1-CS1								80h
DC20	114h	R/W	LED dot current setting for Dot L1-CS2								80h
DC21	115h	R/W	LED dot current setting for Dot L1-CS3								80h
DC22	116h	R/W	LED dot current setting for Dot L1-CS4								80h
DC23	117h	R/W	LED dot current setting for Dot L1-CS5								80h
DC24	118h	R/W	LED dot current setting for Dot L1-CS6								80h
DC25	119h	R/W	LED dot current setting for Dot L1-CS7								80h
DC26	11Ah	R/W	LED dot current setting for Dot L1-CS8								80h
DC27	11Bh	R/W	LED dot current setting for Dot L1-CS9								80h
DC28	11Ch	R/W	LED dot current setting for Dot L1-CS10								80h
DC29	11Dh	R/W	LED dot current setting for Dot L1-CS11								80h
DC30	11Eh	R/W	LED dot current setting for Dot L1-CS12								80h
DC31	11Fh	R/W	LED dot current setting for Dot L1-CS13								80h
DC32	120h	R/W	LED dot current setting for Dot L1-CS14								80h
DC33	121h	R/W	LED dot current setting for Dot L1-CS15								80h
DC34	122h	R/W	LED dot current setting for Dot L1-CS16								80h
DC35	123h	R/W	LED dot current setting for Dot L1-CS17								80h
DC36	124h	R/W	LED dot current setting for Dot L2-CS0								80h
DC37	125h	R/W	LED dot current setting for Dot L2-CS1								80h
DC38	126h	R/W	LED dot current setting for Dot L2-CS2								80h
DC39	127h	R/W	LED dot current setting for Dot L2-CS3								80h

Copyright © 2024 Texas Instruments Incorporated

Register Acronym	Address	Type	D7	D6	D5	D4	D3	D2	D1	D0	Default
DC40	128h	R/W	LED dot current setting for Dot L2-CS4								80h
DC41	129h	R/W	LED dot current setting for Dot L2-CS5								80h
DC42	12Ah	R/W	LED dot current setting for Dot L2-CS6								80h
DC43	12Bh	R/W	LED dot current setting for Dot L2-CS7								80h
DC44	12Ch	R/W	LED dot current setting for Dot L2-CS8								80h
DC45	12Dh	R/W	LED dot current setting for Dot L2-CS9								80h
DC46	12Eh	R/W	LED dot current setting for Dot L2-CS10								80h
DC47	12Fh	R/W	LED dot current setting for Dot L2-CS11								80h
DC48	130h	R/W	LED dot current setting for Dot L2-CS12								80h
DC49	131h	R/W	LED dot current setting for Dot L2-CS13								80h
DC50	132h	R/W	LED dot current setting for Dot L2-CS14								80h
DC51	133h	R/W	LED dot current setting for Dot L2-CS15								80h
DC52	134h	R/W	LED dot current setting for Dot L2-CS16								80h
DC53	135h	R/W	LED dot current setting for Dot L2-CS17								80h
DC54	136h	R/W	LED dot current setting for Dot L3-CS0								80h
DC55	137h	R/W	LED dot current setting for Dot L3-CS1								80h
DC56	138h	R/W	LED dot current setting for Dot L3-CS2								80h
DC57	139h	R/W	LED dot current setting for Dot L3-CS3								80h
DC58	13Ah	R/W	LED dot current setting for Dot L3-CS4								80h
DC59	13Bh	R/W	LED dot current setting for Dot L3-CS5								80h
DC60	13Ch	R/W	LED dot current setting for Dot L3-CS6								80h
DC61	13Dh	R/W	LED dot current setting for Dot L3-CS7								80h
DC62	13Eh	R/W	LED dot current setting for Dot L3-CS8								80h
DC63	13Fh	R/W	LED dot current setting for Dot L3-CS9								80h
DC64	140h	R/W	LED dot current setting for Dot L3-CS10								80h
DC65	141h	R/W	LED dot current setting for Dot L3-CS11								80h
DC66	142h	R/W	LED dot current setting for Dot L3-CS12								80h
DC67	143h	R/W	LED dot current setting for Dot L3-CS13								80h
DC68	144h	R/W	LED dot current setting for Dot L3-CS14								80h
DC69	145h	R/W	LED dot current setting for Dot L3-CS15								80h
DC70	146h	R/W	LED dot current setting for Dot L3-CS16								80h
DC71	147h	R/W	LED dot current setting for Dot L3-CS17								80h
DC72	148h	R/W	LED dot current setting for Dot L4-CS0								80h
DC73	149h	R/W	LED dot current setting for Dot L4-CS1								80h
DC74	14Ah	R/W	LED dot current setting for Dot L4-CS2								80h
DC75	14Bh	R/W	LED dot current setting for Dot L4-CS3								80h
DC76	14Ch	R/W	LED dot current setting for Dot L4-CS4								80h
DC77	14Dh	R/W	LED dot current setting for Dot L4-CS5								80h
DC78	14Eh	R/W	LED dot current setting for Dot L4-CS6								80h
DC79	14Fh	R/W	LED dot current setting for Dot L4-CS7								80h
DC80	150h	R/W	LED dot current setting for Dot L4-CS8								80h
DC81	151h	R/W	LED dot current setting for Dot L4-CS9								80h
DC82	152h	R/W	LED dot current setting for Dot L4-CS10								80h
DC83	153h	R/W	LED dot current setting for Dot L4-CS11								80h
DC84	154h	R/W	LED dot current setting for Dot L4-CS12								80h

Copyright © 2024 Texas Instruments Incorporated

Register Acronym	Address	Type	D7	D6	D5	D4	D3	D2	D1	D0	Default
DC85	155h	R/W	LED dot current setting for Dot L4-CS13								80h
DC86	156h	R/W	LED dot current setting for Dot L4-CS14								80h
DC87	157h	R/W	LED dot current setting for Dot L4-CS15								80h
DC88	158h	R/W	LED dot current setting for Dot L4-CS16								80h
DC89	159h	R/W	LED dot current setting for Dot L4-CS17								80h
DC90	15Ah	R/W	LED dot current setting for Dot L5-CS0								80h
DC91	15Bh	R/W	LED dot current setting for Dot L5-CS1								80h
DC92	15Ch	R/W	LED dot current setting for Dot L5-CS2								80h
DC93	15Dh	R/W	LED dot current setting for Dot L5-CS3								80h
DC94	15Eh	R/W	LED dot current setting for Dot L5-CS4								80h
DC95	15Fh	R/W	LED dot current setting for Dot L5-CS5								80h
DC96	160h	R/W	LED dot current setting for Dot L5-CS6								80h
DC97	161h	R/W	LED dot current setting for Dot L5-CS7								80h
DC98	162h	R/W	LED dot current setting for Dot L5-CS8								80h
DC99	163h	R/W	LED dot current setting for Dot L5-CS9								80h
DC100	164h	R/W	LED dot current setting for Dot L5-CS10								80h
DC101	165h	R/W	LED dot current setting for Dot L5-CS11								80h
DC102	166h	R/W	LED dot current setting for Dot L5-CS12								80h
DC103	167h	R/W	LED dot current setting for Dot L5-CS13								80h
DC104	168h	R/W	LED dot current setting for Dot L5-CS14								80h
DC105	169h	R/W	LED dot current setting for Dot L5-CS15								80h
DC106	16Ah	R/W	LED dot current setting for Dot L5-CS16								80h
DC107	16Bh	R/W	LED dot current setting for Dot L5-CS17								80h
pwm_bri0	200h	R/W	8-bits PWM for Dot L0-CS0 OR 16-bits PWM lower 8 bits [7:0] for Dot L0-CS0								00h
pwm_bri1	201h	R/W	8-bits PWM for Dot L0-CS1 OR 16-bits PWM higher 8 bits [15:8] for Dot L0-CS0								00h
pwm_bri2	202h	R/W	8-bits PWM for Dot L0-CS2 OR 16-bits PWM lower 8 bits [7:0] for Dot L0-CS1								00h
pwm_bri3	203h	R/W	8-bits PWM for Dot L0-CS3 OR 16-bits PWM higher 8 bits [15:8] for Dot L0-CS1								00h
pwm_bri4	204h	R/W	8-bits PWM for Dot L0-CS4 OR 16-bits PWM lower 8 bits [7:0] for Dot L0-CS2								00h
pwm_bri5	205h	R/W	8-bits PWM for Dot L0-CS5 OR 16-bits PWM higher 8 bits [15:8] for Dot L0-CS2								00h
pwm_bri6	206h	R/W	8-bits PWM for Dot L0-CS6 OR 16-bits PWM lower 8 bits [7:0] for Dot L0-CS3								00h
pwm_bri7	207h	R/W	8-bits PWM for Dot L0-CS7 OR 16-bits PWM higher 8 bits [15:8] for Dot L0-CS3								00h
pwm_bri8	208h	R/W	8-bits PWM for Dot L0-CS8 OR 16-bits PWM lower 8 bits [7:0] for Dot L0-CS4								00h
pwm_bri9	209h	R/W	8-bits PWM for Dot L0-CS9 OR 16-bits PWM higher 8 bits [15:8] for Dot L0-CS4								00h
pwm_bri10	20Ah	R/W	8-bits PWM for Dot L0-CS10 OR 16-bits PWM lower 8 bits [7:0] for Dot L0-CS5								00h
pwm_bri11	20Bh	R/W	8-bits PWM for Dot L0-CS11 OR 16-bits PWM higher 8 bits [15:8] for Dot L0-CS5								00h
pwm_bri12	20Ch	R/W	8-bits PWM for Dot L0-CS12 OR 16-bits PWM lower 8 bits [7:0] for Dot L0-CS6								00h
pwm_bri13	20Dh	R/W	8-bits PWM for Dot L0-CS13 OR 16-bits PWM higher 8 bits [15:8] for Dot L0-CS6								00h
pwm_bri14	20Eh	R/W	8-bits PWM for Dot L0-CS14 OR 16-bits PWM lower 8 bits [7:0] for Dot L0-CS7								00h
pwm_bri15	20Fh	R/W	8-bits PWM for Dot L0-CS15 OR 16-bits PWM higher 8 bits [15:8] for Dot L0-CS7								00h
pwm_bri16	210h	R/W	8-bits PWM for Dot L0-CS16 OR 16-bits PWM lower 8 bits [7:0] for Dot L0-CS8								00h
pwm_bri17	211h	R/W	8-bits PWM for Dot L0-CS17 OR 16-bits PWM higher 8 bits [15:8] for Dot L0-CS8								00h
pwm_bri18	212h	R/W	8-bits PWM for Dot L1-CS0 OR 16-bits PWM lower 8 bits [7:0] for Dot L0-CS9								00h
pwm_bri19	213h	R/W	8-bits PWM for Dot L1-CS1 OR 16-bits PWM higher 8 bits [15:8] for Dot L0-CS9								00h
pwm_bri20	214h	R/W	8-bits PWM for Dot L1-CS2 OR 16-bits PWM lower 8 bits [7:0] for Dot L0-CS10								00h
pwm_bri21	215h	R/W	8-bits PWM for Dot L1-CS3 OR 16-bits PWM higher 8 bits [15:8] for Dot L0-CS10								00h

Copyright © 2024 Texas Instruments Incorporated

Register Acronym	Address	Type	D7	D6	D5	D4	D3	D2	D1	D0	Default
pwm_bri22	216h	R/W	8-bits PWM for Dot L1-CS4 OR 16-bits PWM lower 8 bits [7:0] for Dot L0-CS11								00h
pwm_bri23	217h	R/W	8-bits PWM for Dot L1-CS5 OR 16-bits PWM higher 8 bits [15:8] for Dot L0-CS11								00h
pwm_bri24	218h	R/W	8-bits PWM for Dot L1-CS6 OR 16-bits PWM lower 8 bits [7:0] for Dot L0-CS12								00h
pwm_bri25	219h	R/W	8-bits PWM for Dot L1-CS7 OR 16-bits PWM higher 8 bits [15:8] for Dot L0-CS12								00h
pwm_bri26	21Ah	R/W	8-bits PWM for Dot L1-CS8 OR 16-bits PWM lower 8 bits [7:0] for Dot L0-CS13								00h
pwm_bri27	21Bh	R/W	8-bits PWM for Dot L1-CS9 OR 16-bits PWM higher 8 bits [15:8] for Dot L0-CS13								00h
pwm_bri28	21Ch	R/W	8-bits PWM for Dot L1-CS10 OR 16-bits PWM lower 8 bits [7:0] for Dot L0-CS14								00h
pwm_bri29	21Dh	R/W	8-bits PWM for Dot L1-CS11 OR 16-bits PWM higher 8 bits [15:8] for Dot L0-CS14								00h
pwm_bri30	21Eh	R/W	8-bits PWM for Dot L1-CS12 OR 16-bits PWM lower 8 bits [7:0] for Dot L0-CS15								00h
pwm_bri31	21Fh	R/W	8-bits PWM for Dot L1-CS13 OR 16-bits PWM higher 8 bits [15:8] for Dot L0-CS15								00h
pwm_bri32	220h	R/W	8-bits PWM for Dot L1-CS14 OR 16-bits PWM lower 8 bits [7:0] for Dot L0-CS16								00h
pwm_bri33	221h	R/W	8-bits PWM for Dot L1-CS15 OR 16-bits PWM higher 8 bits [15:8] for Dot L0-CS16								00h
pwm_bri34	222h	R/W	8-bits PWM for Dot L1-CS16 OR 16-bits PWM lower 8 bits [7:0] for Dot L0-CS17								00h
pwm_bri35	223h	R/W	8-bits PWM for Dot L1-CS17 OR 16-bits PWM higher 8 bits [15:8] for Dot L0-CS17								00h
pwm_bri36	224h	R/W	8-bits PWM for Dot L2-CS0 OR 16-bits PWM lower 8 bits [7:0] for Dot L1-CS0								00h
pwm_bri37	225h	R/W	8-bits PWM for Dot L2-CS1 OR 16-bits PWM higher 8 bits [15:8] for Dot L1-CS0								00h
pwm_bri38	226h	R/W	8-bits PWM for Dot L2-CS2 OR 16-bits PWM lower 8 bits [7:0] for Dot L1-CS1								00h
pwm_bri39	227h	R/W	8-bits PWM for Dot L2-CS3 OR 16-bits PWM higher 8 bits [15:8] for Dot L1-CS1								00h
pwm_bri40	228h	R/W	8-bits PWM for Dot L2-CS4 OR 16-bits PWM lower 8 bits [7:0] for Dot L1-CS2								00h
pwm_bri41	229h	R/W	8-bits PWM for Dot L2-CS5 OR 16-bits PWM higher 8 bits [15:8] for Dot L1-CS2								00h
pwm_bri42	22Ah	R/W	8-bits PWM for Dot L2-CS6 OR 16-bits PWM lower 8 bits [7:0] for Dot L1-CS3								00h
pwm_bri43	22Bh	R/W	8-bits PWM for Dot L2-CS7 OR 16-bits PWM higher 8 bits [15:8] for Dot L1-CS3								00h
pwm_bri44	22Ch	R/W	8-bits PWM for Dot L2-CS8 OR 16-bits PWM lower 8 bits [7:0] for Dot L1-CS4								00h
pwm_bri45	22Dh	R/W	8-bits PWM for Dot L2-CS9 OR 16-bits PWM higher 8 bits [15:8] for Dot L1-CS4								00h
pwm_bri46	22Eh	R/W	8-bits PWM for Dot L2-CS10 OR 16-bits PWM lower 8 bits [7:0] for Dot L1-CS5								00h
pwm_bri47	22Fh	R/W	8-bits PWM for Dot L2-CS11 OR 16-bits PWM higher 8 bits [15:8] for Dot L1-CS5								00h
pwm_bri48	230h	R/W	8-bits PWM for Dot L2-CS12 OR 16-bits PWM lower 8 bits [7:0] for Dot L1-CS6								00h
pwm_bri49	231h	R/W	8-bits PWM for Dot L2-CS13 OR 16-bits PWM higher 8 bits [15:8] for Dot L1-CS6								00h
pwm_bri50	232h	R/W	8-bits PWM for Dot L2-CS14 OR 16-bits PWM lower 8 bits [7:0] for Dot L1-CS7								00h
pwm_bri51	233h	R/W	8-bits PWM for Dot L2-CS15 OR 16-bits PWM higher 8 bits [15:8] for Dot L1-CS7								00h
pwm_bri52	234h	R/W	8-bits PWM for Dot L2-CS16 OR 16-bits PWM lower 8 bits [7:0] for Dot L1-CS8								00h
pwm_bri53	235h	R/W	8-bits PWM for Dot L2-CS17 OR 16-bits PWM higher 8 bits [15:8] for Dot L1-CS8								00h
pwm_bri54	236h	R/W	8-bits PWM for Dot L3-CS0 OR 16-bits PWM lower 8 bits [7:0] for Dot L1-CS9								00h
pwm_bri55	237h	R/W	8-bits PWM for Dot L3-CS1 OR 16-bits PWM higher 8 bits [15:8] for Dot L1-CS9								00h
pwm_bri56	238h	R/W	8-bits PWM for Dot L3-CS2 OR 16-bits PWM lower 8 bits [7:0] for Dot L1-CS10								00h
pwm_bri57	239h	R/W	8-bits PWM for Dot L3-CS3 OR 16-bits PWM higher 8 bits [15:8] for Dot L1-CS10								00h
pwm_bri58	23Ah	R/W	8-bits PWM for Dot L3-CS4 OR 16-bits PWM lower 8 bits [7:0] for Dot L1-CS11								00h
pwm_bri59	23Bh	R/W	8-bits PWM for Dot L3-CS5 OR 16-bits PWM higher 8 bits [15:8] for Dot L1-CS11								00h
pwm_bri60	23Ch	R/W	8-bits PWM for Dot L3-CS6 OR 16-bits PWM lower 8 bits [7:0] for Dot L1-CS12								00h
pwm_bri61	23Dh	R/W	8-bits PWM for Dot L3-CS7 OR 16-bits PWM higher 8 bits [15:8] for Dot L1-CS12								00h
pwm_bri62	23Eh	R/W	8-bits PWM for Dot L3-CS8 OR 16-bits PWM lower 8 bits [7:0] for Dot L1-CS13								00h
pwm_bri63	23Fh	R/W	8-bits PWM for Dot L3-CS9 OR 16-bits PWM higher 8 bits [15:8] for Dot L1-CS13								00h
pwm_bri64	240h	R/W	8-bits PWM for Dot L3-CS10 OR 16-bits PWM lower 8 bits [7:0] for Dot L1-CS14								00h
pwm_bri65	241h	R/W	8-bits PWM for Dot L3-CS11 OR 16-bits PWM higher 8 bits [15:8] for Dot L1-CS14								00h
pwm_bri66	242h	R/W	8-bits PWM for Dot L3-CS12 OR 16-bits PWM lower 8 bits [7:0] for Dot L1-CS15								00h

Copyright © 2024 Texas Instruments Incorporated

Register Acronym	Address	Type	D7	D6	D5	D4	D3	D2	D1	D0	Default
pwm_bri67	243h	R/W	8-bits PWM for Dot L3-CS13 OR 16-bits PWM higher 8 bits [15:8] for Dot L1-CS15								00h
pwm_bri68	244h	R/W	8-bits PWM for Dot L3-CS14 OR 16-bits PWM lower 8 bits [7:0] for Dot L1-CS16								00h
pwm_bri69	245h	R/W	8-bits PWM for Dot L3-CS15 OR 16-bits PWM higher 8 bits [15:8] for Dot L1-CS16								00h
pwm_bri70	246h	R/W	8-bits PWM for Dot L3-CS16 OR 16-bits PWM lower 8 bits [7:0] for Dot L1-CS17								00h
pwm_bri71	247h	R/W	8-bits PWM for Dot L3-CS17 OR 16-bits PWM higher 8 bits [15:8] for Dot L1-CS17								00h
pwm_bri72	248h	R/W	8-bits PWM for Dot L4-CS0 OR 16-bits PWM lower 8 bits [7:0] for Dot L2-CS0								00h
pwm_bri73	249h	R/W	8-bits PWM for Dot L4-CS1 OR 16-bits PWM higher 8 bits [15:8] for Dot L2-CS0								00h
pwm_bri74	24Ah	R/W	8-bits PWM for Dot L4-CS2 OR 16-bits PWM lower 8 bits [7:0] for Dot L2-CS1								00h
pwm_bri75	24Bh	R/W	8-bits PWM for Dot L4-CS3 OR 16-bits PWM higher 8 bits [15:8] for Dot L2-CS1								00h
pwm_bri76	24Ch	R/W	8-bits PWM for Dot L4-CS4 OR 16-bits PWM lower 8 bits [7:0] for Dot L2-CS2								00h
pwm_bri77	24Dh	R/W	8-bits PWM for Dot L4-CS5 OR 16-bits PWM higher 8 bits [15:8] for Dot L2-CS2								00h
pwm_bri78	24Eh	R/W	8-bits PWM for Dot L4-CS6 OR 16-bits PWM lower 8 bits [7:0] for Dot L2-CS3								00h
pwm_bri79	24Fh	R/W	8-bits PWM for Dot L4-CS7 OR 16-bits PWM higher 8 bits [15:8] for Dot L2-CS3								00h
pwm_bri80	250h	R/W	8-bits PWM for Dot L4-CS8 OR 16-bits PWM lower 8 bits [7:0] for Dot L2-CS4								00h
pwm_bri81	251h	R/W	8-bits PWM for Dot L4-CS9 OR 16-bits PWM higher 8 bits [15:8] for Dot L2-CS4								00h
pwm_bri82	252h	R/W	8-bits PWM for Dot L4-CS10 OR 16-bits PWM lower 8 bits [7:0] for Dot L2-CS5								00h
pwm_bri83	253h	R/W	8-bits PWM for Dot L4-CS11 OR 16-bits PWM higher 8 bits [15:8] for Dot L2-CS5								00h
pwm_bri84	254h	R/W	8-bits PWM for Dot L4-CS12 OR 16-bits PWM lower 8 bits [7:0] for Dot L2-CS6								00h
pwm_bri85	255h	R/W	8-bits PWM for Dot L4-CS13 OR 16-bits PWM higher 8 bits [15:8] for Dot L2-CS6								00h
pwm_bri86	256h	R/W	8-bits PWM for Dot L4-CS14 OR 16-bits PWM lower 8 bits [7:0] for Dot L2-CS7								00h
pwm_bri87	257h	R/W	8-bits PWM for Dot L4-CS15 OR 16-bits PWM higher 8 bits [15:8] for Dot L2-CS7								00h
pwm_bri88	258h	R/W	8-bits PWM for Dot L4-CS16 OR 16-bits PWM lower 8 bits [7:0] for Dot L2-CS8								00h
pwm_bri89	259h	R/W	8-bits PWM for Dot L4-CS17 OR 16-bits PWM higher 8 bits [15:8] for Dot L2-CS8								00h
pwm_bri90	25Ah	R/W	8-bits PWM for Dot L5-CS0 OR 16-bits PWM lower 8 bits [7:0] for Dot L2-CS9								00h
pwm_bri91	25Bh	R/W	8-bits PWM for Dot L5-CS1 OR 16-bits PWM higher 8 bits [15:8] for Dot L2-CS9								00h
pwm_bri92	25Ch	R/W	8-bits PWM for Dot L5-CS2 OR 16-bits PWM lower 8 bits [7:0] for Dot L2-CS10								00h
pwm_bri93	25Dh	R/W	8-bits PWM for Dot L5-CS3 OR 16-bits PWM higher 8 bits [15:8] for Dot L2-CS10								00h
pwm_bri94	25Eh	R/W	8-bits PWM for Dot L5-CS4 OR 16-bits PWM lower 8 bits [7:0] for Dot L2-CS11								00h
pwm_bri95	25Fh	R/W	8-bits PWM for Dot L5-CS5 OR 16-bits PWM higher 8 bits [15:8] for Dot L2-CS11								00h
pwm_bri96	260h	R/W	8-bits PWM for Dot L5-CS6 OR 16-bits PWM lower 8 bits [7:0] for Dot L2-CS12								00h
pwm_bri97	261h	R/W	8-bits PWM for Dot L5-CS7 OR 16-bits PWM higher 8 bits [15:8] for Dot L2-CS12								00h
pwm_bri98	262h	R/W	8-bits PWM for Dot L5-CS8 OR 16-bits PWM lower 8 bits [7:0] for Dot L2-CS13								00h
pwm_bri99	263h	R/W	8-bits PWM for Dot L5-CS9 OR 16-bits PWM higher 8 bits [15:8] for Dot L2-CS13								00h
pwm_bri100	264h	R/W	8-bits PWM for Dot L5-CS10 OR 16-bits PWM lower 8 bits [7:0] for Dot L2-CS14								00h
pwm_bri101	265h	R/W	8-bits PWM for Dot L5-CS11 OR 16-bits PWM higher 8 bits [15:8] for Dot L2-CS14								00h
pwm_bri102	266h	R/W	8-bits PWM for Dot L5-CS12 OR 16-bits PWM lower 8 bits [7:0] for Dot L2-CS15								00h
pwm_bri103	267h	R/W	8-bits PWM for Dot L5-CS13 OR 16-bits PWM higher 8 bits [15:8] for Dot L2-CS15								00h
pwm_bri104	268h	R/W	8-bits PWM for Dot L5-CS14 OR 16-bits PWM lower 8 bits [7:0] for Dot L2-CS16								00h
pwm_bri105	269h	R/W	8-bits PWM for Dot L5-CS15 OR 16-bits PWM higher 8 bits [15:8] for Dot L2-CS16								00h
pwm_bri106	26Ah	R/W	8-bits PWM for Dot L5-CS16 OR 16-bits PWM lower 8 bits [7:0] for Dot L2-CS17								00h
pwm_bri107	26Bh	R/W	8-bits PWM for Dot L5-CS17 OR 16-bits PWM higher 8 bits [15:8] for Dot L2-CS17								00h
pwm_bri108	26Ch	R/W	16-bits PWM lower 8 bits [7:0] for Dot L3-CS0								00h
pwm_bri109	26Dh	R/W	16-bits PWM higher 8 bits [15:8] for Dot L3-CS0								00h
pwm_bri110	26Eh	R/W	16-bits PWM lower 8 bits [7:0] for Dot L3-CS1								00h
pwm_bri111	26Fh	R/W	16-bits PWM higher 8 bits [15:8] for Dot L3-CS1								00h

Copyright © 2024 Texas Instruments Incorporated

Register Acronym	Address	Type	D7	D6	D5	D4	D3	D2	D1	D0	Default
pwm_bri112	270h	R/W	16-bits PWM lower 8 bits [7:0] for Dot L3-CS2								00h
pwm_bri113	271h	R/W	16-bits PWM higher 8 bits [15:8] for Dot L3-CS2								00h
pwm_bri114	272h	R/W	16-bits PWM lower 8 bits [7:0] for Dot L3-CS3								00h
pwm_bri115	273h	R/W	16-bits PWM higher 8 bits [15:8] for Dot L3-CS3								00h
pwm_bri116	274h	R/W	16-bits PWM lower 8 bits [7:0] for Dot L3-CS4								00h
pwm_bri117	275h	R/W	16-bits PWM higher 8 bits [15:8] for Dot L3-CS4								00h
pwm_bri118	276h	R/W	16-bits PWM lower 8 bits [7:0] for Dot L3-CS5								00h
pwm_bri119	277h	R/W	16-bits PWM higher 8 bits [15:8] for Dot L3-CS5								00h
pwm_bri120	278h	R/W	16-bits PWM lower 8 bits [7:0] for Dot L3-CS6								00h
pwm_bri121	279h	R/W	16-bits PWM higher 8 bits [15:8] for Dot L3-CS6								00h
pwm_bri122	27Ah	R/W	16-bits PWM lower 8 bits [7:0] for Dot L3-CS7								00h
pwm_bri123	27Bh	R/W	16-bits PWM higher 8 bits [15:8] for Dot L3-CS7								00h
pwm_bri124	27Ch	R/W	16-bits PWM lower 8 bits [7:0] for Dot L3-CS8								00h
pwm_bri125	27Dh	R/W	16-bits PWM higher 8 bits [15:8] for Dot L3-CS8								00h
pwm_bri126	27Eh	R/W	16-bits PWM lower 8 bits [7:0] for Dot L3-CS9								00h
pwm_bri127	27Fh	R/W	16-bits PWM higher 8 bits [15:8] for Dot L3-CS9								00h
pwm_bri128	280h	R/W	16-bits PWM lower 8 bits [7:0] for Dot L3-CS10								00h
pwm_bri129	281h	R/W	16-bits PWM higher 8 bits [15:8] for Dot L3-CS10								00h
pwm_bri130	282h	R/W	16-bits PWM lower 8 bits [7:0] for Dot L3-CS11								00h
pwm_bri131	283h	R/W	16-bits PWM higher 8 bits [15:8] for Dot L3-CS11								00h
pwm_bri132	284h	R/W	16-bits PWM lower 8 bits [7:0] for Dot L3-CS12								00h
pwm_bri133	285h	R/W	16-bits PWM higher 8 bits [15:8] for Dot L3-CS12								00h
pwm_bri134	286h	R/W	16-bits PWM lower 8 bits [7:0] for Dot L3-CS13								00h
pwm_bri135	287h	R/W	16-bits PWM higher 8 bits [15:8] for Dot L3-CS13								00h
pwm_bri136	288h	R/W	16-bits PWM lower 8 bits [7:0] for Dot L3-CS14								00h
pwm_bri137	289h	R/W	16-bits PWM higher 8 bits [15:8] for Dot L3-CS14								00h
pwm_bri138	28Ah	R/W	16-bits PWM lower 8 bits [7:0] for Dot L3-CS15								00h
pwm_bri139	28Bh	R/W	16-bits PWM higher 8 bits [15:8] for Dot L3-CS15								00h
pwm_bri140	28Ch	R/W	16-bits PWM lower 8 bits [7:0] for Dot L3-CS16								00h
pwm_bri141	28Dh	R/W	16-bits PWM higher 8 bits [15:8] for Dot L3-CS16								00h
pwm_bri142	28Eh	R/W	16-bits PWM lower 8 bits [7:0] for Dot L3-CS17								00h
pwm_bri143	28Fh	R/W	16-bits PWM higher 8 bits [15:8] for Dot L3-CS17								00h
pwm_bri144	290h	R/W	16-bits PWM lower 8 bits [7:0] for Dot L4-CS0								00h
pwm_bri145	291h	R/W	16-bits PWM higher 8 bits [15:8] for Dot L4-CS0								00h
pwm_bri146	292h	R/W	16-bits PWM lower 8 bits [7:0] for Dot L4-CS1								00h
pwm_bri147	293h	R/W	16-bits PWM higher 8 bits [15:8] for Dot L4-CS1								00h
pwm_bri148	294h	R/W	16-bits PWM lower 8 bits [7:0] for Dot L4-CS2								00h
pwm_bri149	295h	R/W	16-bits PWM higher 8 bits [15:8] for Dot L4-CS2								00h
pwm_bri150	296h	R/W	16-bits PWM lower 8 bits [7:0] for Dot L4-CS3								00h
pwm_bri151	297h	R/W	16-bits PWM higher 8 bits [15:8] for Dot L4-CS3								00h
pwm_bri152	298h	R/W	16-bits PWM lower 8 bits [7:0] for Dot L4-CS4								00h
pwm_bri153	299h	R/W	16-bits PWM higher 8 bits [15:8] for Dot L4-CS4								00h
pwm_bri154	29Ah	R/W	16-bits PWM lower 8 bits [7:0] for Dot L4-CS5								00h
pwm_bri155	29Bh	R/W	16-bits PWM higher 8 bits [15:8] for Dot L4-CS5								00h
pwm_bri156	29Ch	R/W	16-bits PWM lower 8 bits [7:0] for Dot L4-CS6								00h

Copyright © 2024 Texas Instruments Incorporated

Register Acronym	Address	Type	D7	D6	D5	D4	D3	D2	D1	D0	Default
pwm_bri157	29Dh	R/W	16-bits PWM higher 8 bits [15:8] for Dot L4-CS6								00h
pwm_bri158	29Eh	R/W	16-bits PWM lower 8 bits [7:0] for Dot L4-CS7								00h
pwm_bri159	29Fh	R/W	16-bits PWM higher 8 bits [15:8] for Dot L4-CS7								00h
pwm_bri160	2A0h	R/W	16-bits PWM lower 8 bits [7:0] for Dot L4-CS8								00h
pwm_bri161	2A1h	R/W	16-bits PWM higher 8 bits [15:8] for Dot L4-CS8								00h
pwm_bri162	2A2h	R/W	16-bits PWM lower 8 bits [7:0] for Dot L4-CS9								00h
pwm_bri163	2A3h	R/W	16-bits PWM higher 8 bits [15:8] for Dot L4-CS9								00h
pwm_bri164	2A4h	R/W	16-bits PWM lower 8 bits [7:0] for Dot L4-CS10								00h
pwm_bri165	2A5h	R/W	16-bits PWM higher 8 bits [15:8] for Dot L4-CS10								00h
pwm_bri166	2A6h	R/W	16-bits PWM lower 8 bits [7:0] for Dot L4-CS11								00h
pwm_bri167	2A7h	R/W	16-bits PWM higher 8 bits [15:8] for Dot L4-CS11								00h
pwm_bri168	2A8h	R/W	16-bits PWM lower 8 bits [7:0] for Dot L4-CS12								00h
pwm_bri169	2A9h	R/W	16-bits PWM higher 8 bits [15:8] for Dot L4-CS12								00h
pwm_bri170	2AAh	R/W	16-bits PWM lower 8 bits [7:0] for Dot L4-CS13								00h
pwm_bri171	2ABh	R/W	16-bits PWM higher 8 bits [15:8] for Dot L4-CS13								00h
pwm_bri172	2ACh	R/W	16-bits PWM lower 8 bits [7:0] for Dot L4-CS14								00h
pwm_bri173	2ADh	R/W	16-bits PWM higher 8 bits [15:8] for Dot L4-CS14								00h
pwm_bri174	2AEh	R/W	16-bits PWM lower 8 bits [7:0] for Dot L4-CS15								00h
pwm_bri175	2AFh	R/W	16-bits PWM higher 8 bits [15:8] for Dot L4-CS15								00h
pwm_bri176	2B0h	R/W	16-bits PWM lower 8 bits [7:0] for Dot L4-CS16								00h
pwm_bri177	2B1h	R/W	16-bits PWM higher 8 bits [15:8] for Dot L4-CS16								00h
pwm_bri178	2B2h	R/W	16-bits PWM lower 8 bits [7:0] for Dot L4-CS17								00h
pwm_bri179	2B3h	R/W	16-bits PWM higher 8 bits [15:8] for Dot L4-CS17								00h
pwm_bri180	2B4h	R/W	16-bits PWM lower 8 bits [7:0] for Dot L5-CS0								00h
pwm_bri181	2B5h	R/W	16-bits PWM higher 8 bits [15:8] for Dot L5-CS0								00h
pwm_bri182	2B6h	R/W	16-bits PWM lower 8 bits [7:0] for Dot L5-CS1								00h
pwm_bri183	2B7h	R/W	16-bits PWM higher 8 bits [15:8] for Dot L5-CS1								00h
pwm_bri184	2B8h	R/W	16-bits PWM lower 8 bits [7:0] for Dot L5-CS2								00h
pwm_bri185	2B9h	R/W	16-bits PWM higher 8 bits [15:8] for Dot L5-CS2								00h
pwm_bri186	2BAh	R/W	16-bits PWM lower 8 bits [7:0] for Dot L5-CS3								00h
pwm_bri187	2BBh	R/W	16-bits PWM higher 8 bits [15:8] for Dot L5-CS3								00h
pwm_bri188	2BCh	R/W	16-bits PWM lower 8 bits [7:0] for Dot L5-CS4								00h
pwm_bri189	2BDh	R/W	16-bits PWM higher 8 bits [15:8] for Dot L5-CS4								00h
pwm_bri190	2BEh	R/W	16-bits PWM lower 8 bits [7:0] for Dot L5-CS5								00h
pwm_bri191	2BFh	R/W	16-bits PWM higher 8 bits [15:8] for Dot L5-CS5								00h
pwm_bri192	2C0h	R/W	16-bits PWM lower 8 bits [7:0] for Dot L5-CS6								00h
pwm_bri193	2C1h	R/W	16-bits PWM higher 8 bits [15:8] for Dot L5-CS6								00h
pwm_bri194	2C2h	R/W	16-bits PWM lower 8 bits [7:0] for Dot L5-CS7								00h
pwm_bri195	2C3h	R/W	16-bits PWM higher 8 bits [15:8] for Dot L5-CS7								00h
pwm_bri196	2C4h	R/W	16-bits PWM lower 8 bits [7:0] for Dot L5-CS8								00h
pwm_bri197	2C5h	R/W	16-bits PWM higher 8 bits [15:8] for Dot L5-CS8								00h
pwm_bri198	2C6h	R/W	16-bits PWM lower 8 bits [7:0] for Dot L5-CS9								00h
pwm_bri199	2C7h	R/W	16-bits PWM higher 8 bits [15:8] for Dot L5-CS9								00h
pwm_bri200	2C8h	R/W	16-bits PWM lower 8 bits [7:0] for Dot L5-CS10								00h
pwm_bri201	2C9h	R/W	16-bits PWM higher 8 bits [15:8] for Dot L5-CS10								00h

Copyright © 2024 Texas Instruments Incorporated

Register Acronym	Address	Type	D7	D6	D5	D4	D3	D2	D1	D0	Default
pwm_bri202	2CAh	R/W	16-bits PWM lower 8 bits [7:0] for Dot L5-CS11								00h
pwm_bri203	2CBh	R/W	16-bits PWM higher 8 bits [15:8] for Dot L5-CS11								00h
pwm_bri204	2CCh	R/W	16-bits PWM lower 8 bits [7:0] for Dot L5-CS12								00h
pwm_bri205	2CDh	R/W	16-bits PWM higher 8 bits [15:8] for Dot L5-CS12								00h
pwm_bri206	2CEh	R/W	16-bits PWM lower 8 bits [7:0] for Dot L5-CS13								00h
pwm_bri207	2CFh	R/W	16-bits PWM higher 8 bits [15:8] for Dot L5-CS13								00h
pwm_bri208	2D0h	R/W	16-bits PWM lower 8 bits [7:0] for Dot L5-CS14								00h
pwm_bri209	2D1h	R/W	16-bits PWM higher 8 bits [15:8] for Dot L5-CS14								00h
pwm_bri210	2D2h	R/W	16-bits PWM lower 8 bits [7:0] for Dot L5-CS15								00h
pwm_bri211	2D3h	R/W	16-bits PWM higher 8 bits [15:8] for Dot L5-CS15								00h
pwm_bri212	2D4h	R/W	16-bits PWM lower 8 bits [7:0] for Dot L5-CS16								00h
pwm_bri213	2D5h	R/W	16-bits PWM higher 8 bits [15:8] for Dot L5-CS16								00h
pwm_bri214	2D6h	R/W	16-bits PWM lower 8 bits [7:0] for Dot L5-CS17								00h
pwm_bri215	2D7h	R/W	16-bits PWM higher 8 bits [15:8] for Dot L5-CS17								00h

Copyright © 2024 Texas Instruments Incorporated

8 Application and Implementation

注

Information in the following applications sections is not part of the TI component specification, and TI does not warrant its accuracy or completeness. TI's customers are responsible for determining suitability of components for their purposes, as well as validating and testing their design implementation to confirm system functionality.

8.1 Application Information

The LP5866T integrates 18 constant current sinks with 6 switching FETs and one LP5866T can drive up to 108 LED dots or 36 RGB pixels and achieve great dimming effect. In smart home, gaming keyboards, and other human-machine interaction applications, the device can greatly improve user experience with small amount of components.

8.2 Typical Application

8.2.1 Application

図 8-1 shows an example of typical application, which uses one LP5866T to drive 66 common-anode RGB LEDs through I^{2}C communication.

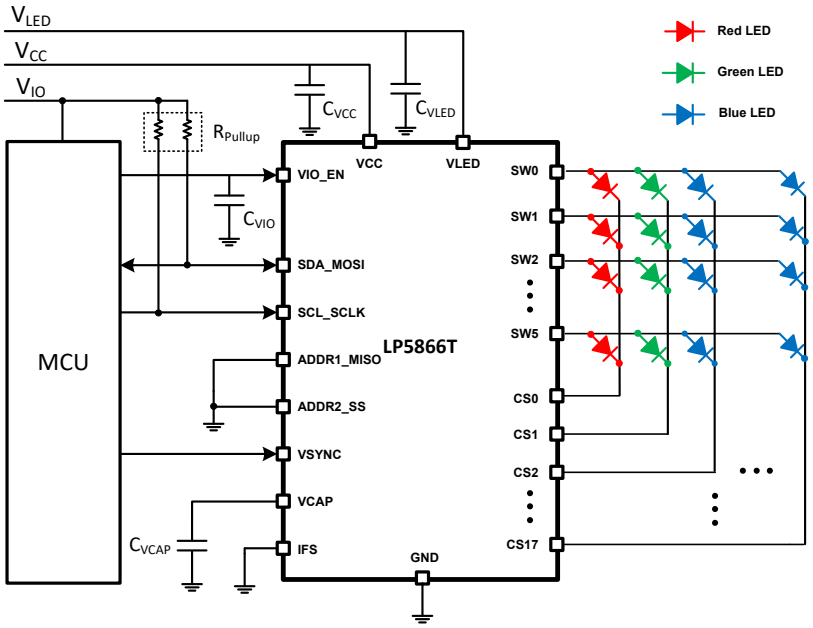

図 8-1. Typical Application - LP5866T Driving 36 RGB LEDs (108 LED Dots)

Copyright © 2024 Texas Instruments Incorporated

8.2.2 Design Requirements

表 8-1. Design Parameters

PARAMETER	VALUE
VCC / VIO	3.3V
VLED	5V
RGB LED count	36
Scan number	6
Interface	I^2C
LED maximum average current (red, green, blue)	16.67mA, 15mA, 13.33mA
LED maximum peak current (red, green, blue)	100mA, 90mA, 80mA

8.2.3 Detailed Design Procedure

LP5866T requires an external capacitor C_{VCAP}, whose value is 1μF connected from V_{CAP} to GND for proper operation of internal LDO. The device must be placed as close to the device as possible.

TI recommends that 1-μF capacitors be placed between VCC / VLED with GND, and a 1nF capacitor placed between VIO with GND. Place the capacitors as close to the device as possible.

Pull-up resistors $R_{pull-up}$ are requirement for SCL and SDA when using I^2C as communication method. In typical applications, TI recommends 1.8kΩ to 4.7kΩ resistors.

To decrease thermal dissipation from device to ambient, resistors R_{CS} can optionally be placed in serial with the LED. Voltage drop on these resistors must left enough margins for VSAT to ensure the device works normally.

8.2.3.1 Program Procedure

When selecting data refresh Mode 1, outputs are refreshed instantly after data is received.

When selecting data refresh Mode 2/3, VSYNC signal is required for synchronized display. Programming flow is showed as 図 8-2. To display full pixel of last frame, VSYNC pulse must be sent to the device after the end of last PWM. Time between two pulses t_{SYNC} must be larger than the whole PWM time of all Dots t_{frame}. Common selection like 60Hz, 90Hz, 120Hz or even higher refresh frequency can be supported. High pulse width longer than t_{SYNC_H} is required at the beginning of each VSYNC frame, and data must not be write to PWM registers during high pulse width.

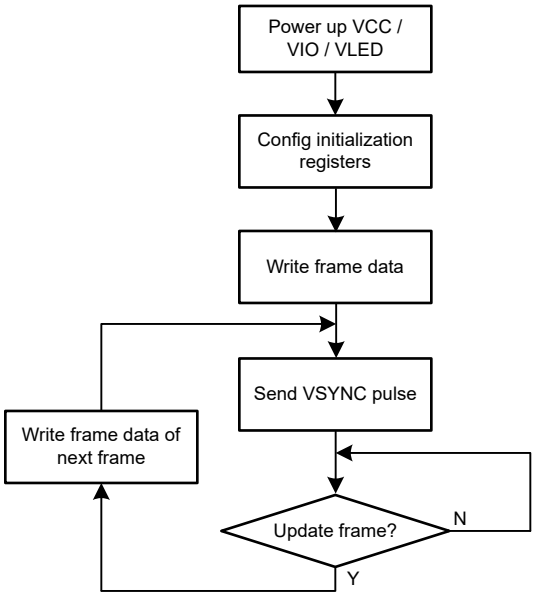

図 8-2. Program Procedure

8.2.4 Application Performance Plots

The following figures show the application performance plots.

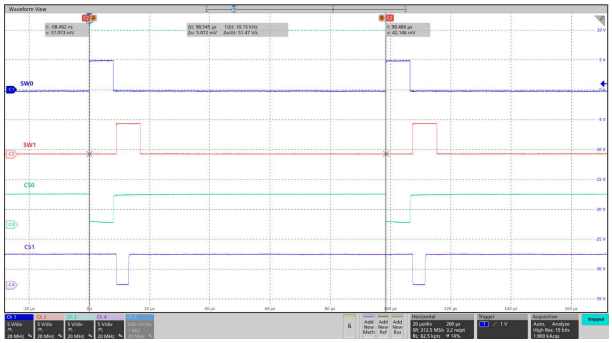

図 8-3. Scan Lines and Current Sinks Waveforms of SW0, SW1, CS0, CS1

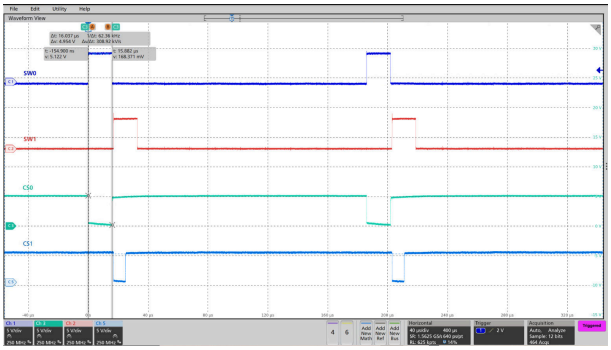

PWM frequency = 62.5kHz

図 8-4. Scan Lines and Current Sinks Waveforms of SW0, SW1, CS0, CS1

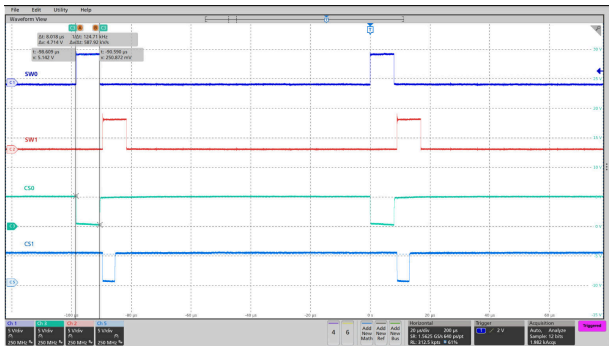

PWM frequency = 125kHz

図 8-5. Scan Lines and Current Sinks Waveforms of SW0, SW1, CS0, CS1

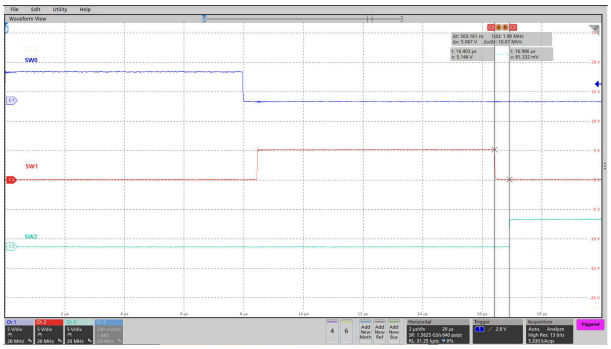

Switch blank time t_{SW_BLK} = 0.5µs

図 8-6. Scan Lines Switching Waveforms of SW0, SW1, SW2

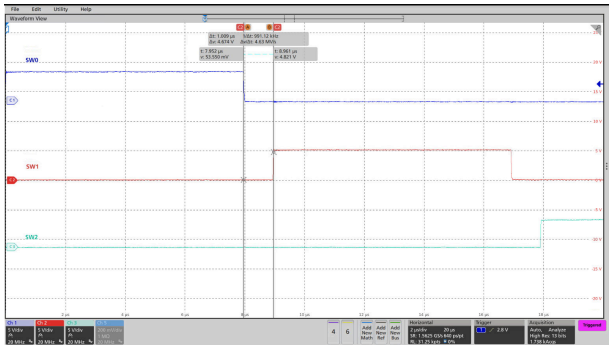

Switch blank time t_{SW_BLK} = 1µs

図 8-7. Scan Lines Switching Waveforms of SW0, SW1, SW2

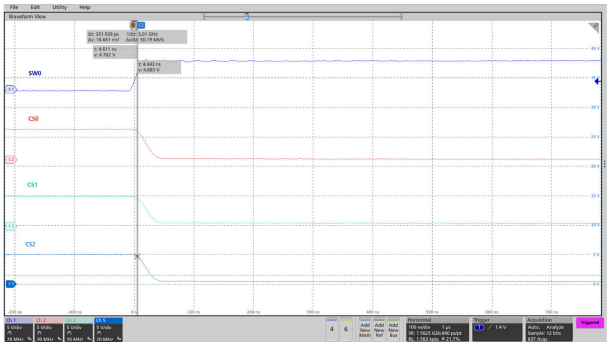

PWM_Phase_Shift = 0h

図 8-8. PWM Phase Shift Disabled

Copyright © 2024 Texas Instruments Incorporated

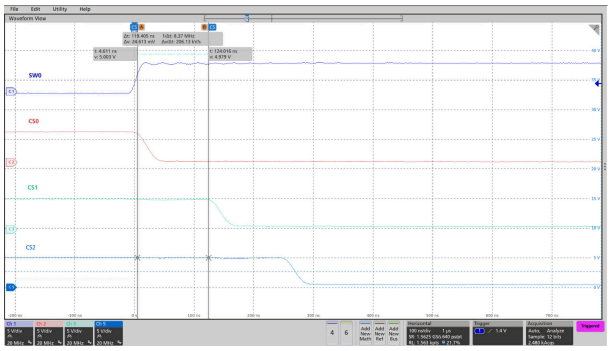

PWM_Phase_Shift = 1h

図 8-9. PWM Phase Shift Enabled

8.3 Power Supply Recommendations

8.3.1 VDD Input Supply Recommendations

LP5866T is designed to operate from a 2.7V to 5.5V VDD voltage supply. This input supply must be well regulated and be able to provide the peak current required by the LED matrix. The resistance of the VDD supply rail must be low enough such that the input current transient does not cause the LP5866T VDD supply voltage to drop below the maximum POR voltage.

8.3.2 VLED Input Supply Recommendations

LP5866T is designed to operate with a 2.7V to 5.5V VLED voltage supply. The VLED supply must be well regulated and able to provide the peak current required by the LED configuration without voltage drop, under load transients like start-up or rapid brightness change. The resistance of the input supply rail must be low enough so that the input current transient does not cause the VLED supply voltage to drop below LED V_f + VSAT voltage.

8.3.3 VIO Input Supply Recommendations

LP5866T is designed to operate with a 1.65V to 5.5V VIO_EN voltage supply. The VIO_EN supply must be well regulated and able to provide the peak current required by the LED configuration without voltage drop under load transients like startup or rapid brightness change.

8.4 Layout

8.4.1 Layout Guidelines

Below guidelines for layout design can help to get a better on-board performance.

- The decoupling capacitors C_{VCC} and C_{VLED} for power supply must be close to the chip to have minimized the impact of high-frequency noise and ripple from power. C_{VCAP} for internal LDO must be put as close to chip as possible. GND plane connections to C_{VLED} and GND pins must be on TOP layer copper with multiple vias connecting to system ground plane. C_{VIO} for internal enable block also must be put as close to chip as possible.
- The exposed thermal pad must be well soldered to the board, which can have better mechanical reliability. This action can optimize heat transfer so that increasing thermal performance. The AGND pin must be connected to thermal pad and system ground.
- The major heat flow path from the package to the ambient is through copper on the PCB. Several methods can help thermal performance. Below exposed thermal pad of the device, putting much vias through the PCB to other ground layer can dissipate more heat. Maximizing the copper coverage on the PCB can increase the thermal conductivity of the board.
- Low inductive and resistive path of switch load loop can help to provide a high slew rate. Therefore, path of VLED – SWx must be short and wide and avoid parallel wiring and narrow trace. Transient current in SWx pins is much larger than CSy pins, so that trace for SWx must be wider than CSy.

Copyright © 2024 Texas Instruments Incorporated

8.4.2 Layout Example

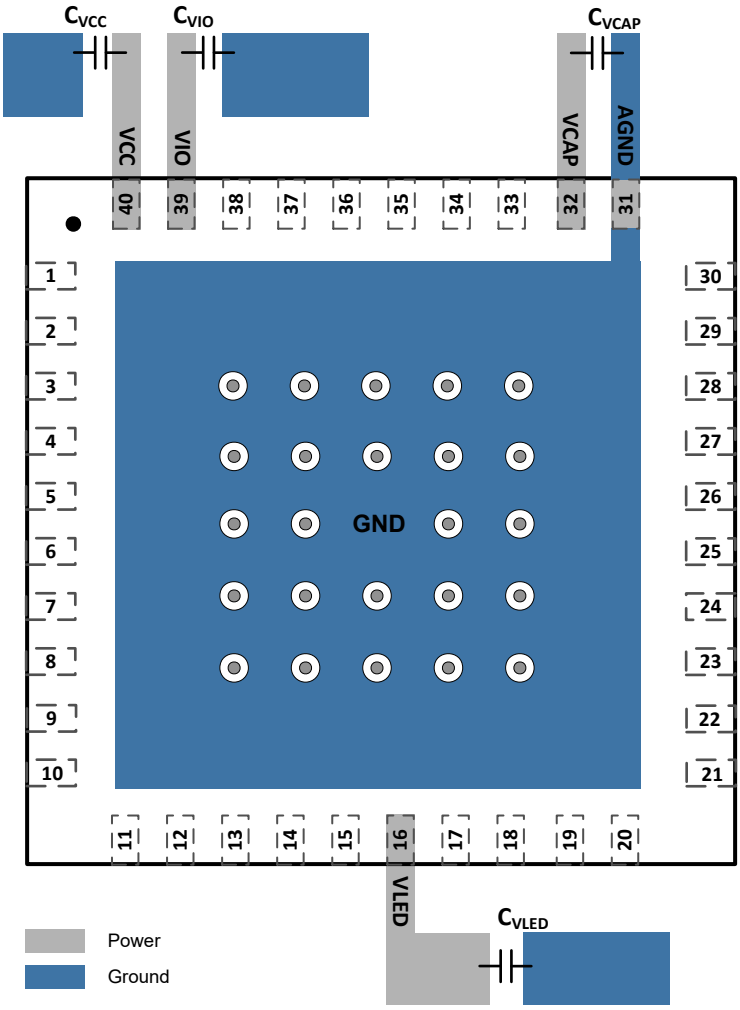

図 8-10. LP5866T Layout Example

Copyright © 2024 Texas Instruments Incorporated

9 Device and Documentation Support

TI offers an extensive line of development tools. Tools and software to evaluate the performance of the device, generate code, and develop solutions are listed below.

9.1 ドキュメントの更新通知を受け取る方法

ドキュメントの更新についての通知を受け取るには、www.tij.co.jp のデバイス製品フォルダを開いてください。[通知] をクリックして登録すると、変更されたすべての製品情報に関するダイジェストを毎週受け取ることができます。変更の詳細については、改訂されたドキュメントに含まれている改訂履歴をご覧ください。

9.2 サポート・リソース

テキサス・インスツルメンツ E2E™ サポート・フォーラムは、エンジニアが検証済みの回答と設計に関するヒントをエキスパートから迅速かつ直接得ることができる場所です。既存の回答を検索したり、独自の質問をしたりすることで、設計で必要な支援を迅速に得ることができます。

リンクされているコンテンツは、各寄稿者により「現状のまま」提供されるものです。これらはテキサス・インスツルメンツの仕様を構成するものではなく、必ずしもテキサス・インスツルメンツの見解を反映したものではありません。テキサス・インスツルメンツの使用条件を参照してください。

9.3 Trademarks

テキサス・インスツルメンツ E2E™ is a trademark of Texas Instruments.
すべての商標は、それぞれの所有者に帰属します。

9.4 静電気放電に関する注意事項

この IC は、ESD によって破損する可能性があります。テキサス・インスツルメンツは、IC を取り扱う際には常に適切な注意を払うことを推奨します。正しい取り扱いおよび設置手順に従わない場合、デバイスを破損するおそれがあります。

ESD による破損は、わずかな性能低下からデバイスの完全な故障まで多岐にわたります。精密な IC の場合、パラメータがわずかに変化するだけで公表されている仕様から外れる可能性があるため、破損が発生しやすくなっています。

9.5 用語集

テキサス・インスツルメンツ用語集　　この用語集には、用語や略語の一覧および定義が記載されています。

10 Revision History

資料番号末尾の英字は改訂を表しています。その改訂履歴は英語版に準じています。

Changes from Revision A (August 2023) to Revision B (November 2023)	Page
• タイトルを 8 ビット アナログおよび 8 または 16 ビット PWM 調光搭載、11 × 18 LED 大電流マトリクス ドライバに更新	1

Changes from Revision * (May 2023) to Revision A (August 2023)	Page
• ステータスを「事前情報」から「量産データ」に変更	1

11 Mechanical, Packaging, and Orderable Information

The following pages include mechanical, packaging, and orderable information. This information is the most current data available for the designated devices. This data is subject to change without notice and revision of this document. For browser-based versions of this data sheet, refer to the left-hand navigation.

Copyright © 2024 Texas Instruments Incorporated

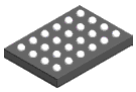

PACKAGE OUTLINE

YBH0024-C02

DSBGA - 0.4 mm max height

DIE SIZE BALL GRID ARRAY

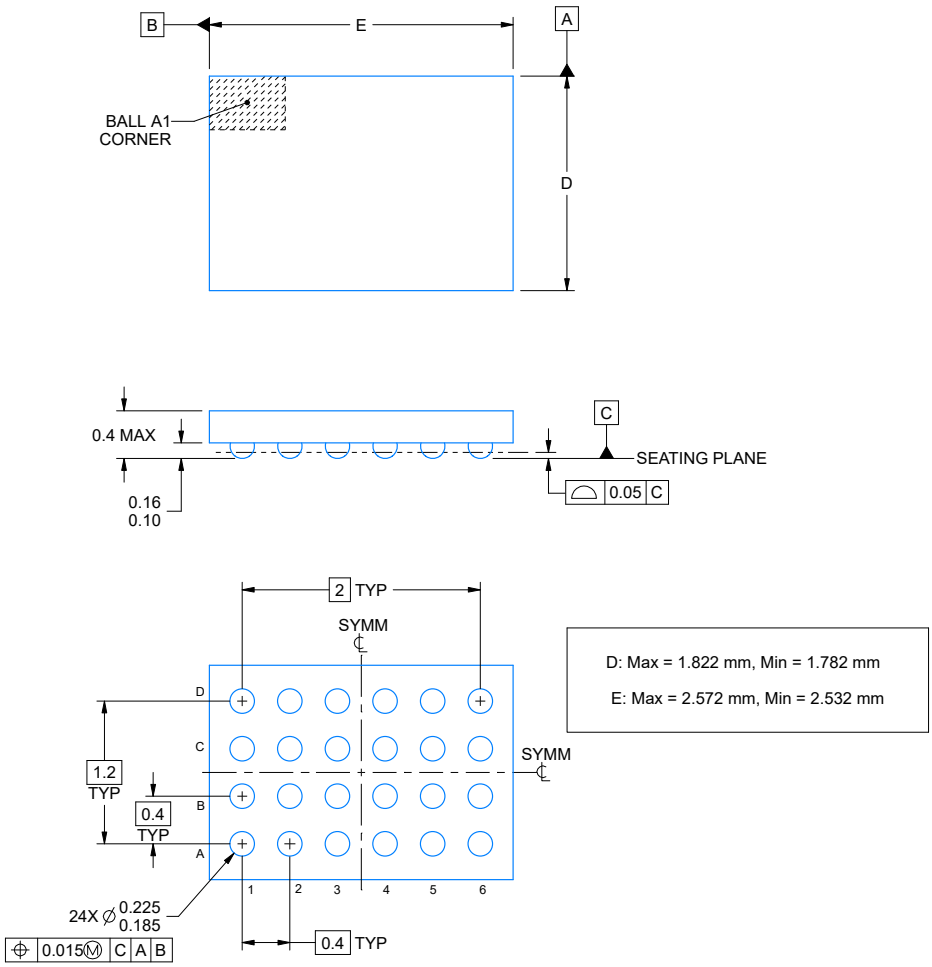

4229900/A 08/2023

NOTES:

1. All linear dimensions are in millimeters. Any dimensions in parenthesis are for reference only. Dimensioning and tolerancing per ASME Y14.5M.
2. This drawing is subject to change without notice.

Copyright © 2024 Texas Instruments Incorporated

EXAMPLE BOARD LAYOUT

YBH0024-C02 **DSBGA - 0.4 mm max height**

DIE SIZE BALL GRID ARRAY

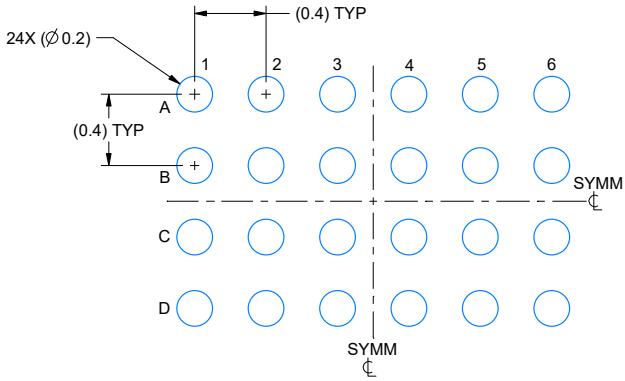

LAND PATTERN EXAMPLE
EXPOSED METAL SHOWN
SCALE: 30X

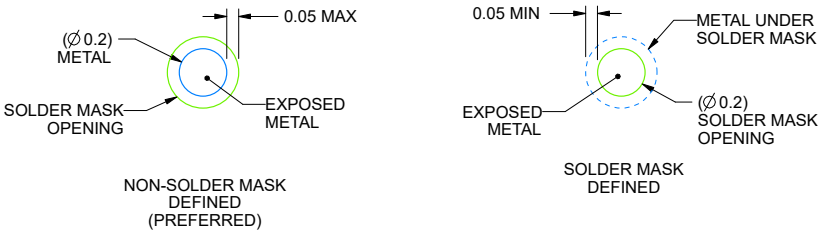

SOLDER MASK DETAILS
NOT TO SCALE

4229900/A 08/2023

NOTES: (continued)

3. Final dimensions may vary due to manufacturing tolerance considerations and also routing constraints.
   See Texas Instruments Literature No. SNVA009 (www.ti.com/lit/snva009).

Copyright © 2024 Texas Instruments Incorporated

EXAMPLE STENCIL DESIGN

YBH0024-C02 **DSBGA - 0.4 mm max height**

DIE SIZE BALL GRID ARRAY

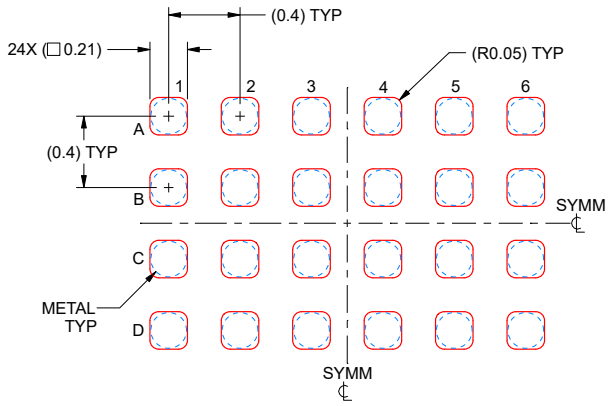

SOLDER PASTE EXAMPLE
BASED ON 0.075 mm THICK STENCIL
SCALE: 30X

4229900/A 08/2023

NOTES: (continued)

4. Laser cutting apertures with trapezoidal walls and rounded corners may offer better paste release.

Copyright © 2024 Texas Instruments Incorporated

重要なお知らせと免責事項

テキサス・インスツルメンツは、技術データと信頼性データ (データシートを含みます)、設計リソース (リファレンス デザインを含みます)、アプリケーションや設計に関する各種アドバイス、Web ツール、安全性情報、その他のリソースを、欠陥が存在する可能性のある「現状のまま」提供しており、商品性および特定目的に対する適合性の黙示保証、第三者の知的財産権の非侵害保証を含むいかなる保証も、明示的または黙示的にかかわらず拒否します。

これらのリソースは、テキサス・インスツルメンツ製品を使用する設計の経験を積んだ開発者への提供を意図したものです。(1) お客様のアプリケーションに適した テキサス・インスツルメンツ製品の選定、(2) お客様のアプリケーションの設計、検証、試験、(3) お客様のアプリケーションに該当する各種規格や、その他のあらゆる安全性、セキュリティ、規制、または他の要件への確実な適合に関する責任を、お客様のみが単独で負うものとします。

上記の各種リソースは、予告なく変更される可能性があります。これらのリソースは、リソースで説明されている テキサス・インスツルメンツ製品を使用するアプリケーションの開発の目的でのみ、テキサス・インスツルメンツはその使用をお客様に許諾します。これらのリソースに関して、他の目的で複製することや掲載することは禁止されています。テキサス・インスツルメンツや第三者の知的財産権のライセンスが付与されている訳ではありません。お客様は、これらのリソースを自身で使用した結果発生するあらゆる申し立て、損害、費用、損失、責任について、テキサス・インスツルメンツおよびその代理人を完全に補償するものとし、テキサス・インスツルメンツは一切の責任を拒否します。

テキサス・インスツルメンツの製品は、テキサス・インスツルメンツの販売条件、または ti.com やかかる テキサス・インスツルメンツ製品の関連資料などのいずれかを通じて提供する適用可能な条項の下で提供されています。テキサス・インスツルメンツがこれらのリソースを提供することは、適用される テキサス・インスツルメンツの保証または他の保証の放棄の拡大や変更を意味するものではありません。

お客様がいかなる追加条項または代替条項を提案した場合でも、テキサス・インスツルメンツはそれらに異議を唱え、拒否します。

郵送先住所：Texas Instruments, Post Office Box 655303, Dallas, Texas 75265
Copyright © 2024, Texas Instruments Incorporated

PACKAGING INFORMATION

Orderable part number	Status (1)	Material type (2)	Package | Pins	Package qty | Carrier	RoHS (3)	Lead finish/ Ball material (4)	MSL rating/ Peak reflow (5)	Op temp (°C)	Part marking (6)
LP5866TMRKPR	Active	Production	VQFN (RKP) | 40	3000 | LARGE T&R	Yes	NIPDAU	Level-1-260C-UNLIM	-55 to 125	5866TM
LP5866TMRKPR.A	Active	Production	VQFN (RKP) | 40	3000 | LARGE T&R	Yes	NIPDAU	Level-1-260C-UNLIM	-55 to 125	5866TM
LP5866TRKPR	Active	Production	VQFN (RKP) | 40	3000 | LARGE T&R	Yes	NIPDAU	Level-2-260C-1 YEAR	-40 to 85	LP5866T
LP5866TRKPR.A	Active	Production	VQFN (RKP) | 40	3000 | LARGE T&R	Yes	NIPDAU	Level-2-260C-1 YEAR	-40 to 85	LP5866T

(1) **Status:** For more details on status, see our product life cycle.

(2) **Material type:** When designated, preproduction parts are prototypes/experimental devices, and are not yet approved or released for full production. Testing and final process, including without limitation quality assurance, reliability performance testing, and/or process qualification, may not yet be complete, and this item is subject to further changes or possible discontinuation. If available for ordering, purchases will be subject to an additional waiver at checkout, and are intended for early internal evaluation purposes only. These items are sold without warranties of any kind.

(3) **RoHS values:** Yes, No, RoHS Exempt. See the TI RoHS Statement for additional information and value definition.

(4) **Lead finish/Ball material:** Parts may have multiple material finish options. Finish options are separated by a vertical ruled line. Lead finish/Ball material values may wrap to two lines if the finish value exceeds the maximum column width.

(5) **MSL rating/Peak reflow:** The moisture sensitivity level ratings and peak solder (reflow) temperatures. In the event that a part has multiple moisture sensitivity ratings, only the lowest level per JEDEC standards is shown. Refer to the shipping label for the actual reflow temperature that will be used to mount the part to the printed circuit board.

(6) **Part marking:** There may be an additional marking, which relates to the logo, the lot trace code information, or the environmental category of the part.

Multiple part markings will be inside parentheses. Only one part marking contained in parentheses and separated by a "~" will appear on a part. If a line is indented then it is a continuation of the previous line and the two combined represent the entire part marking for that device.

Important Information and Disclaimer: The information provided on this page represents TI's knowledge and belief as of the date that it is provided. TI bases its knowledge and belief on information provided by third parties, and makes no representation or warranty as to the accuracy of such information. Efforts are underway to better integrate information from third parties. TI has taken and continues to take reasonable steps to provide representative and accurate information but may not have conducted destructive testing or chemical analysis on incoming materials and chemicals. TI and TI suppliers consider certain information to be proprietary, and thus CAS numbers and other limited information may not be available for release.

In no event shall TI's liability arising out of such information exceed the total purchase price of the TI part(s) at issue in this document sold by TI to Customer on an annual basis.

TAPE AND REEL INFORMATION

REEL DIMENSIONS

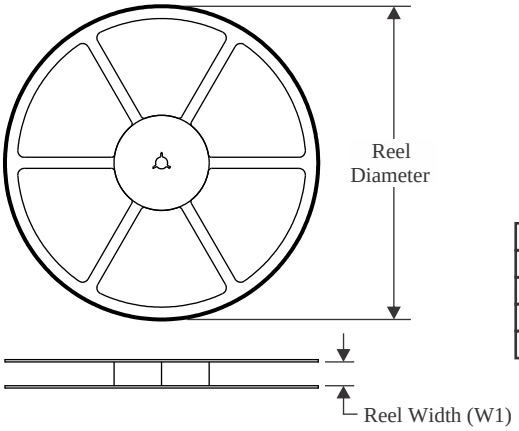

TAPE DIMENSIONS

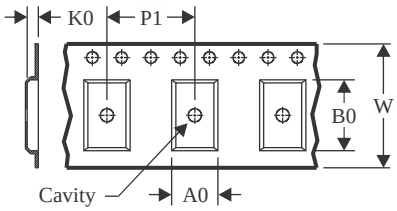

A0	Dimension designed to accommodate the component width
B0	Dimension designed to accommodate the component length
K0	Dimension designed to accommodate the component thickness
W	Overall width of the carrier tape
P1	Pitch between successive cavity centers

QUADRANT ASSIGNMENTS FOR PIN 1 ORIENTATION IN TAPE

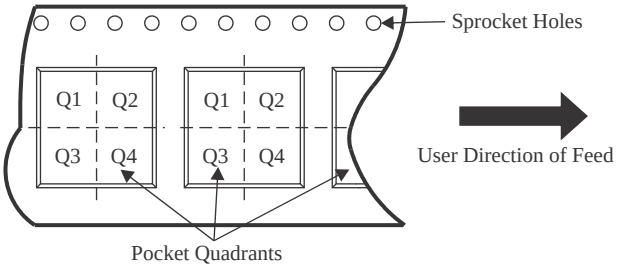

*All dimensions are nominal

Device	Package Type	Package Drawing	Pins	SPQ	Reel Diameter (mm)	Reel Width W1 (mm)	A0 (mm)	B0 (mm)	K0 (mm)	P1 (mm)	W (mm)	Pin1 Quadrant
LP5866TMRKPR	VQFN	RKP	40	3000	330.0	12.4	5.3	5.3	1.1	8.0	12.0	Q2
LP5866TRKPR	VQFN	RKP	40	3000	330.0	12.4	5.3	5.3	1.1	8.0	12.0	Q2

TAPE AND REEL BOX DIMENSIONS

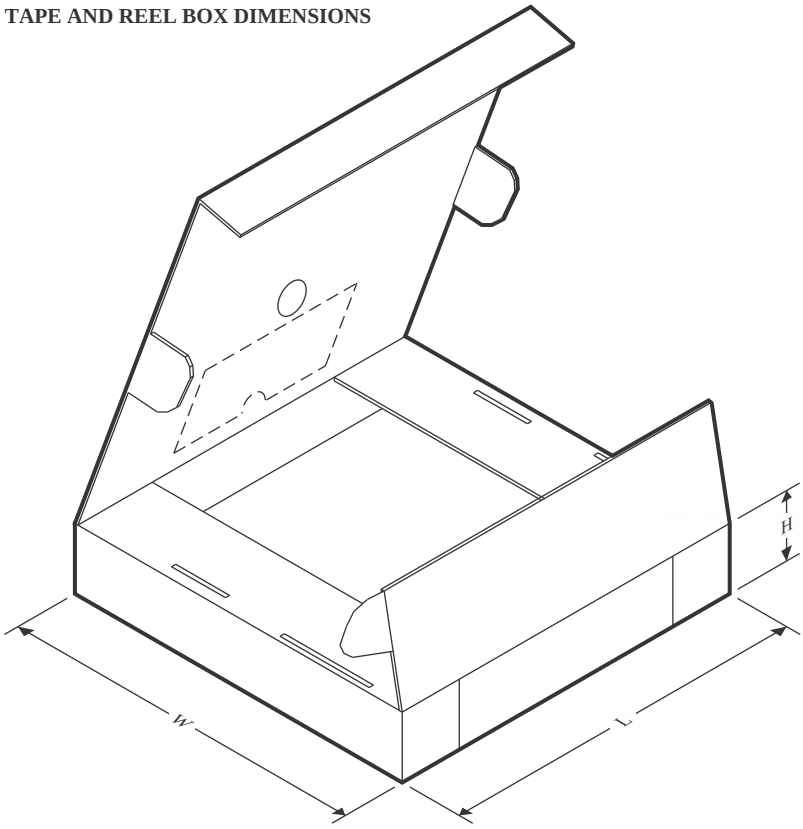

*All dimensions are nominal

Device	Package Type	Package Drawing	Pins	SPQ	Length (mm)	Width (mm)	Height (mm)
LP5866TMRKPR	VQFN	RKP	40	3000	360.0	360.0	36.0
LP5866TRKPR	VQFN	RKP	40	3000	360.0	360.0	36.0

GENERIC PACKAGE VIEW

RKP 40

VQFN - 1 mm max height

5 x 5, 0.4 mm pitch

PLASTIC QUAD FLATPACK - NO LEAD

This image is a representation of the package family, actual package may vary.
Refer to the product data sheet for package details.

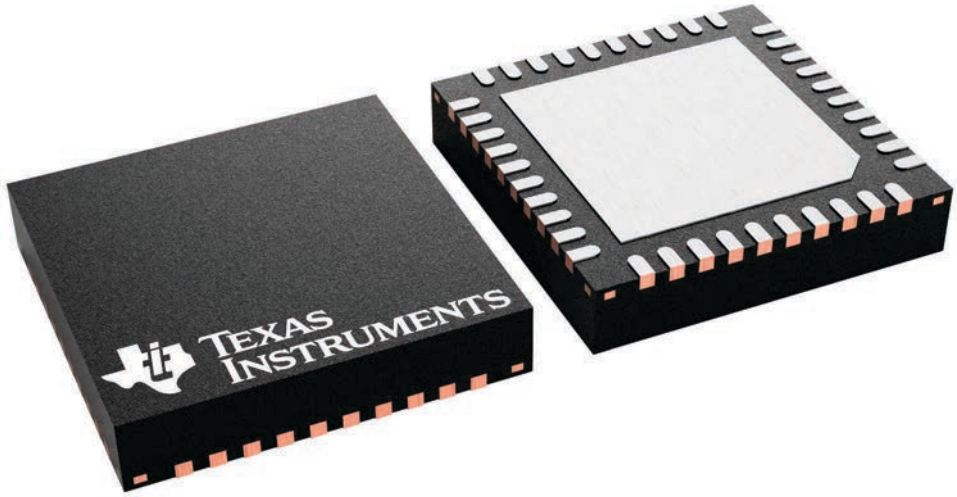

4229305/A

PLASTIC QUAD FLATPACK- NO LEAD

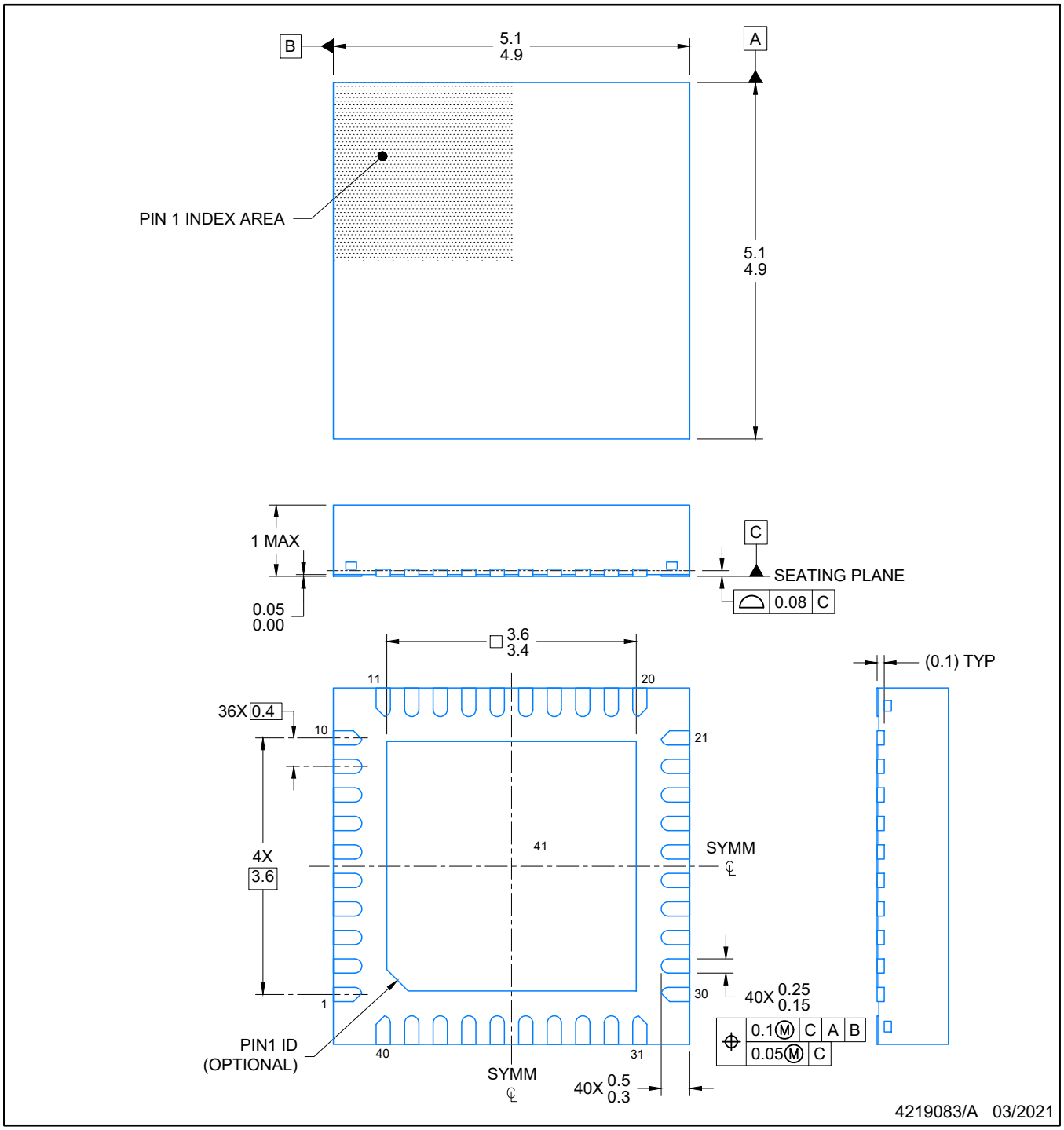

NOTES:

1. All linear dimensions are in millimeters. Any dimensions in parenthesis are for reference only. Dimensioning and tolerancing per ASME Y14.5M.
2. This drawing is subject to change without notice.
3. The package thermal pad must be soldered to the printed circuit board for optimal thermal and mechanical performance.

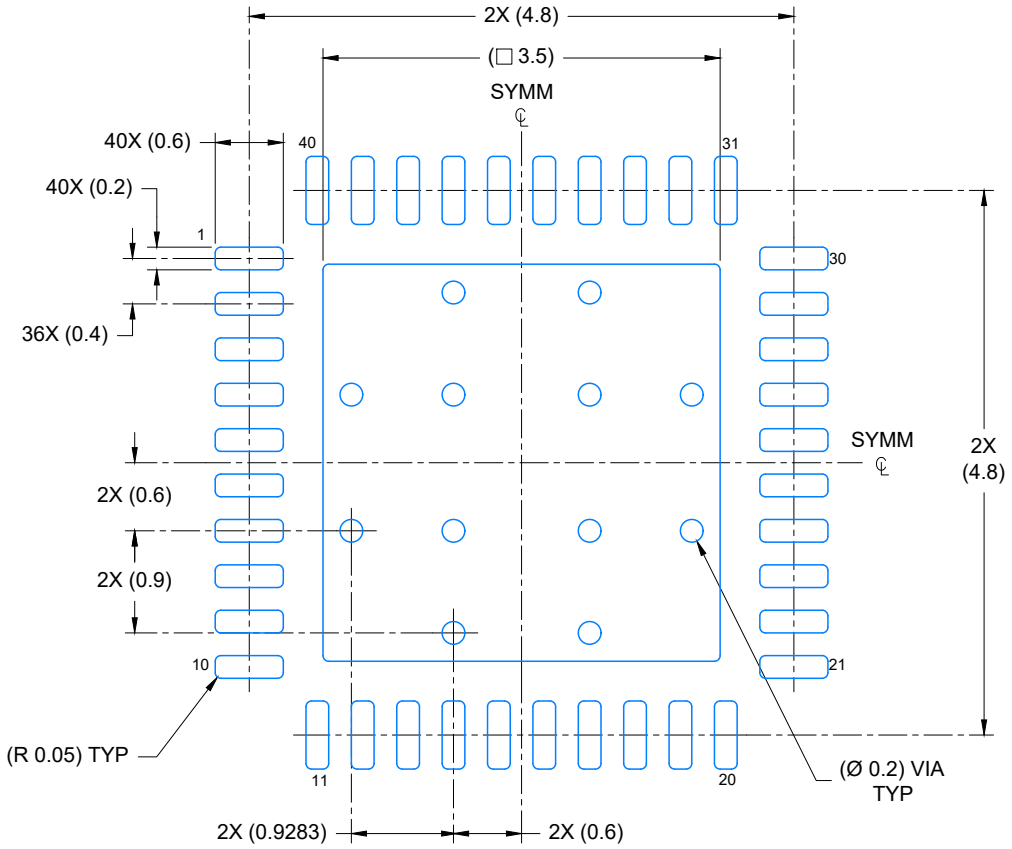

LAND PATTERN EXAMPLE
EXPOSED METAL SHOWN
SCALE: 15X

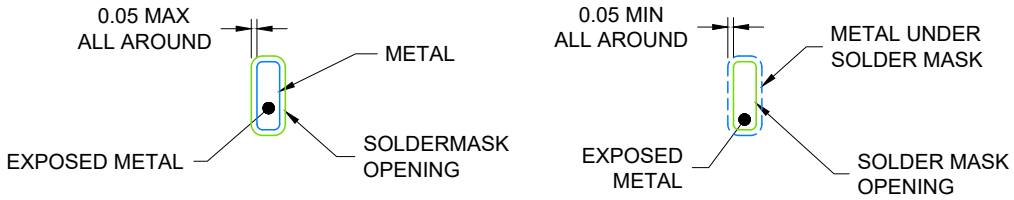

NON- SOLDER MASK DEFINED (PREFERRED)

SOLDER MASK DEFINED

SOLDER MASK DETAILS

4219083/A 03/2021

NOTES: (continued)

4. This package is designed to be soldered to a thermal pad on the board. For more information, see Texas Instruments literature number SLUA271 (www.ti.com/lit/slua271).
5. Vias are optional depending on application, refer to device data sheet. If any vias are implemented, refer to their locations shown on this view. It is recommended that vias under paste be filled, plugged or tented.

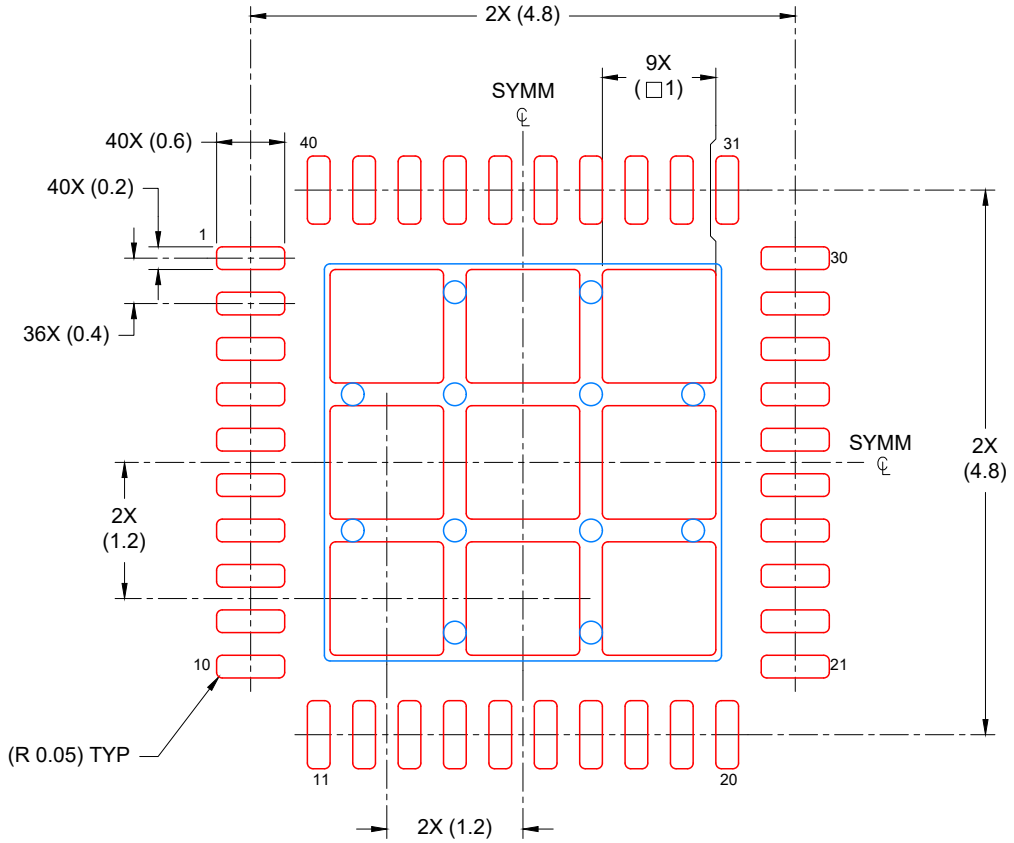

SOLDER PASTE EXAMPLE
BASED ON 0.125 mm THICK STENCIL

EXPOSED PAD
74% PRINTED COVERAGE BY AREA
SCALE: 15X

4219083/A 03/2021

NOTES: (continued)

6. Laser cutting apertures with trapezoidal walls and rounded corners may offer better paste release. IPC-7525 may have alternate design recommendations.

重要なお知らせと免責事項

TI は、技術データと信頼性データ (データシートを含みます)、設計リソース (リファレンス デザインを含みます)、アプリケーションや設計に関する各種アドバイス、Web ツール、安全性情報、その他のリソースを、欠陥が存在する可能性のある「現状のまま」提供しており、商品性および特定目的に対する適合性の黙示保証、第三者の知的財産権の非侵害保証を含むいかなる保証も、明示的または黙示的にかかわらず拒否します。

これらのリソースは、TI 製品を使用する設計の経験を積んだ開発者への提供を意図したものです。(1) お客様のアプリケーションに適した TI 製品の選定、(2) お客様のアプリケーションの設計、検証、試験、(3) お客様のアプリケーションに該当する各種規格や、その他のあらゆる安全性、セキュリティ、規制、または他の要件への確実な適合に関する責任を、お客様のみが単独で負うものとします。

上記の各種リソースは、予告なく変更される可能性があります。これらのリソースは、リソースで説明されている TI 製品を使用するアプリケーションの開発の目的でのみ、TI はその使用をお客様に許諾します。これらのリソースに関して、他の目的で複製することや掲載することは禁止されています。TI や第三者の知的財産権のライセンスが付与されている訳ではありません。お客様は、これらのリソースを自身で使用した結果発生するあらゆる申し立て、損害、費用、損失、責任について、TI およびその代理人を完全に補償するものとし、TI は一切の責任を拒否します。

TI の製品は、 TI の販売条件 、 TI の総合的な品質ガイドライン 、 ti.com または TI 製品などに関連して提供される他の適用条件に従い提供されます。TI がこれらのリソースを提供することは、適用される TI の保証または他の保証の放棄の拡大や変更を意味するものではありません。 TI がカスタム、またはカスタマー仕様として明示的に指定していない限り、TI の製品は標準的なカタログに掲載される汎用機器です。

お客様がいかなる追加条項または代替条項を提案する場合も、TI はそれらに異議を唱え、拒否します。

Copyright © 2026, Texas Instruments Incorporated

最終更新日：2025 年 10 月