# MAX232E デュアル RS-232 ドライバ / レシーバ、IEC61000-4-2 保護機能搭載

## 1 特長

- TIA/RS-232-F および ITU 勧告 V.28 適合またはそれを上回る性能
- RS-232 バス ピン用 ESD 保護機能
  - ±15kV 人体モデル (HBM)
  - ±8kV IEC61000-4-2、接触放電
  - ±15kV IEC61000-4-2、気中放電
- 1µF チャージ ポンプ コンデンサを使用して 5V 単一電源で動作
- 最大 250kbit/s で動作
- 2 つのドライバと 2 つのレシーバ
- 低い消費電流：8mA (代表値)

## 2 アプリケーション

- TIA/RS-232-F
- バッテリ駆動システム
- 端末
- モデム
- コンピュータ

## 3 概要

MAX232E は、5V 単一電源から RS-232-F 準拠の電圧レベルを供給する容量性電圧発生器を内蔵したデュアル ドライバ / レシーバです。各レシーバは、RS -232 の入力を 5V の TTL/CMOS レベルに変換します。このレシーバは、標準スレッショルドが 1.3V 、標準ヒステリシスが 0.5V で、±30V の入力を受け入れます。各ドライバは、TTL/CMOS 入力レベルを TIA/RS-232-F レベルに変換します。

**パッケージ情報**

| 部品番号 | パッケージ (1) | パッケージ サイズ(2) |
|---|---|---|
| MAX232 | SOIC (16) | 9.9mm × 6mm |
| | SOIC (16) | 10.4mm × 10.3mm |
| | PDIP (16) | 19.3mm × 9mm |
| | SOP (16) | 10.2mm × 7.8 mm |

(1) 詳細については、セクション 10 を参照してください。
(2) パッケージ サイズ (長さ × 幅) は公称値であり、該当する場合はピンも含まれます。

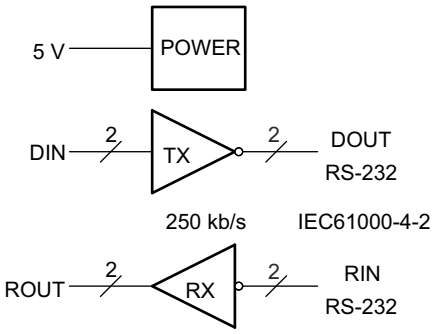


Copyright © 2016, Texas Instruments Incorporated

**論理図 (正論理)**

このリソースの元の言語は英語です。翻訳は概要を便宜的に提供するもので、自動化ツール (機械翻訳) を使用していることがあり、TI では翻訳の正確性および妥当性につきましては一切保証いたしません。実際の設計などの前には、ti.com で必ず最新の英語版をご参照くださいますようお願いいたします。

# Table of Contents

**1 特長** ... 1
**2 アプリケーション** ... 1
**3 概要** ... 1
**4 Pin Configuration and Functions** ... 3
**5 Specifications** ... 4
5.1 Absolute Maximum Ratings ... 4
5.2 ESD Ratings ... 4
5.3 Recommended Operating Conditions ... 4
5.4 Thermal Information ... 5
5.5 Electrical Characteristics ... 5
5.6 Electrical Characteristics: Driver ... 5
5.7 Electrical Characteristics: Receiver ... 5
5.8 Switching Characteristics: Driver ... 6
5.9 Switching Characteristics: Receiver ... 6
5.10 Typical Characteristics ... 7
**6 Detailed Description** ... 10
6.1 Overview ... 10
6.2 Functional Block Diagram ... 10
6.3 Feature Description ... 10
6.4 Device Functional Modes ... 11
**7 Applications and Implementation** ... 12
7.1 Application Information ... 12
7.2 Typical Application ... 12
7.3 Power Supply Recommendations ... 13
7.4 Layout ... 14
**8 Device and Documentation Support** ... 15
8.1 ドキュメントの更新通知を受け取る方法 ... 15
8.2 サポート・リソース ... 15
8.3 Trademarks ... 15
8.4 静電気放電に関する注意事項 ... 15
8.5 用語集 ... 15
**9 Revision History** ... 15
**10 Mechanical, Packaging, and Orderable Information** ... 16


Copyright © 2024 Texas Instruments Incorporated

# 4 Pin Configuration and Functions

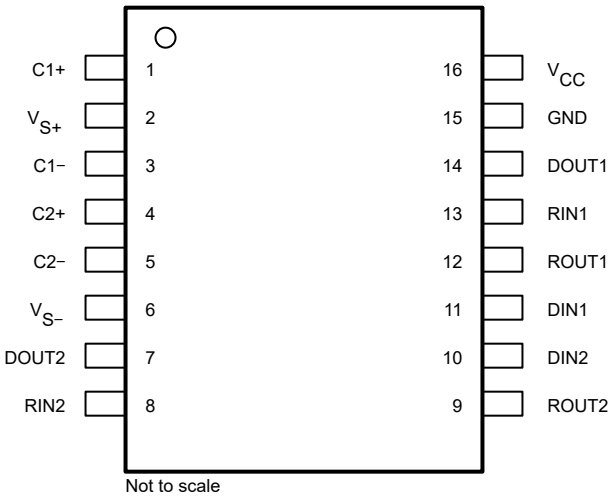


**図 4-1. D (SOIC) , DW (SOIC), N (PDIP), or PW (TSSOP) 16-Pin Package (Top View)**

**表 4-1. Pin Functions**

| PIN | | TYPE | DESCRIPTION |
|---|---|---|---|
| NO. | NAME | | |
| 1 | C1+ | — | Positive lead of C1 capacitor |
| 2 | $V_{S+}$ | O | Positive charge pump output for storage capacitor only |
| 3 | C1– | — | Negative lead of C1 capacitor |
| 4 | C2+ | — | Positive lead of C2 capacitor |
| 5 | C2– | — | Negative lead of C2 capacitor |
| 6 | $V_{S-}$ | O | Negative charge pump output for storage capacitor only |
| 7 | DOUT2 | O | RS-232 line data output (to remote RS-232 system) |
| 8 | RIN2 | I | RS-232 line data input (from remote RS-232 system) |
| 9 | ROUT2 | O | Logic data output (to UART) |
| 10 | DIN2 | I | Logic data input (from UART) |
| 11 | DIN1 | I | Logic data input (from UART) |
| 12 | ROUT1 | O | Logic data output (to UART) |
| 13 | RIN1 | I | RS-232 line data input (from remote RS-232 system) |
| 14 | DOUT1 | O | RS-232 line data output (to remote RS-232 system) |
| 15 | GND | — | Ground |
| 16 | $V_{CC}$ | — | Supply voltage, connect to external 5V power supply |

Copyright © 2024 Texas Instruments Incorporated

# 5 Specifications

## 5.1 Absolute Maximum Ratings

over operating free-air temperature range (unless otherwise noted)(1)

| | | | MIN | MAX | UNIT |
|---|---|---|---|---|---|
| $V_{CC}$ | Input supply voltage (2) | | –0.3 | 6 | V |
| $V_{S+}$ | Positive output supply voltage | | $V_{CC}$ – 0.3 | 15 | V |
| $V_{S–}$ | Negative output supply voltage | | –0.3 | –15 | V |
| $V_I$ | Input voltage | Driver | –0.3 | $V_{CC}$ + 0.3 | V |
| | | Receiver | | ±30 | |
| $V_O$ | Output voltage | DOUT | $V_{S–}$ – 0.3 | $V_{S+}$ + 0.3 | V |
| | | ROUT | –0.3 | $V_{CC}$ + 0.3 | |
| | Short-circuit duration | DOUT | Unlimited | | |
| $T_J$ | Operating virtual junction temperature | | | 150 | °C |
| $T_{stg}$ | Storage temperature | | –65 | 150 | °C |

(1) Stresses beyond those listed under *Absolute Maximum Ratings* may cause permanent damage to the device. These are stress ratings only, which do not imply functional operation of the device at these or any other conditions beyond those indicated under *Recommended Operating Conditions*. Exposure to absolute-maximum-rated conditions for extended periods may affect device reliability.
(2) All voltages are with respect to network GND.

## 5.2 ESD Ratings

| | | | | VALUE | UNIT |
|---|---|---|---|---|---|
| $V_{(ESD)}$ | Electrostatic discharge | Human-body model (HBM), per ANSI/ESDA/JEDEC JS-001(1) | Pins 7, 8, 13, and 14 | ±15000 | V |
| | | | Other pins | ±3000 | |
| | | Charged-device model (CDM), per JEDEC specification JESD22-C101(2) | All pins | ±1500 | |
| | | IEC61000-4-2, air-gap discharge | Pins 7, 8, 13, and 14 | ±15000 | |
| | | IEC61000-4-2, contact discharge | | ±8000 | |

(1) JEDEC document JEP155 states that 500V HBM allows safe manufacturing with a standard ESD control process.
(2) JEDEC document JEP157 states that 250V CDM allows safe manufacturing with a standard ESD control process.

## 5.3 Recommended Operating Conditions

| | | | MIN | NOM | MAX | UNIT |
|---|---|---|---|---|---|---|
| $V_{CC}$ | Supply voltage | | 4.5 | 5 | 5.5 | V |
| $V_{IH}$ | High-level input voltage (DIN1, DIN2) | | 2 | | | V |
| $V_{IL}$ | Low-level input voltage (DIN1, DIN2) | | | | 0.8 | V |
| | Receiver input voltage (RIN1, RIN2) | | ±3 | | ±30 | V |
| $T_A$ | Operating free-air temperature | MAX232EC | 0 | | 70 | °C |
| | | MAX232EI | –40 | | 85 | |


Copyright © 2024 Texas Instruments Incorporated

## 5.4 Thermal Information

| THERMAL METRIC(1) (2) (3) | | D (SOIC) | DW (SOIC) | N (PDIP) | PW (TSSOP) | UNIT |
|---|---|---|---|---|---|---|
| | | 16 PINS | 16 PINS | 16 PINS | 16 PINS | |
| $R_{\theta JA}$ | Junction-to-ambient thermal resistance | 84.6 | 73.4 | 60.6 | 107.5 | °C/W |
| $R_{\theta JC(top)}$ | Junction-to-case (top) thermal resistance | 43.5 | 35.1 | 48.1 | 38.4 | °C/W |
| $R_{\theta JB}$ | Junction-to-board thermal resistance | 43.2 | 38.3 | 40.6 | 53.7 | °C/W |
| $\psi_{JT}$ | Junction-to-top characterization parameter | 10.4 | 9.4 | 27.5 | 3.2 | °C/W |
| $\psi_{JB}$ | Junction-to-board characterization parameter | 42.8 | 37.7 | 40.3 | 53.1 | °C/W |

(1) For more information about traditional and new thermal metrics, see the *Semiconductor and IC Package Thermal Metrics* application report.
(2) Maximum power dissipation is a function of $T_J(max)$, $R_{\theta JA}$, and $T_A$. The maximum allowable power dissipation at any allowable ambient temperature is $P_D = (T_J(max) – T_A)/R_{\theta JA}$. Operating at the absolute maximum $T_J$ of 150°C can affect reliability.
(3) The package thermal impedance is calculated in accordance with JESD 51-7.

## 5.5 Electrical Characteristics

over recommended ranges of supply voltage and operating free-air temperature (unless otherwise noted) (see 図 7-1)

| PARAMETER | | TEST CONDITIONS(1) | | MIN | TYP(2) | MAX | UNIT |
|---|---|---|---|---|---|---|---|
| $I_{CC}$ | Supply current | $V_{CC}$ = 5.5 V | All outputs open, $T_A$ = 25°C | | 8 | 10 | mA |

(1) Test conditions are C1 – C4 = 1µF at $V_{CC}$ = 5V ± 0.5V.
(2) All typical values are at $V_{CC}$ = 5 V and $T_A$ = 25°C.

## 5.6 Electrical Characteristics: Driver

over recommended ranges of supply voltage and operating free-air temperature range

| PARAMETER | | | TEST CONDITIONS(1) | | MIN | TYP(2) | MAX | UNIT |
|---|---|---|---|---|---|---|---|---|
| $V_{OH}$ | High-level output voltage | DOUT | $R_L$ = 3 kΩ to GND | | 5 | 7 | | V |
| $V_{OL}$ | Low-level output voltage(3) | DOUT | $R_L$ = 3 kΩ to GND | | | –7 | –5 | V |
| $r_o$ | Output resistance | DOUT | $V_{S+}$ = $V_{S–}$ = 0, | $V_O$ = ±2 V | 300 | | | Ω |
| $I_{OS}$ (4) | Short-circuit output current | DOUT | $V_{CC}$ = 5.5 V, | $V_O$ = 0 | | ±10 | | mA |
| $I_{IS}$ | Short-circuit input current | DIN | $V_I$ = 0 | | | | 200 | µA |

(1) Test conditions are C1 – C4 = 1µF at $V_{CC}$ = 5V ± 0.5V.
(2) All typical values are at $V_{CC}$ = 5V and $T_A$ = 25°C.
(3) The algebraic convention, in which the least-positive (most negative) value is designated minimum, is used in this data sheet for logic voltage levels only.
(4) Not more than one output should be shorted at a time.

## 5.7 Electrical Characteristics: Receiver

over recommended ranges of supply voltage and operating free-air temperature range

| PARAMETER | | | TEST CONDITIONS(1) | | MIN | TYP(2) | MAX | UNIT |
|---|---|---|---|---|---|---|---|---|
| $V_{OH}$ | High-level output voltage | ROUT | $I_{OH}$ = –1mA | | 3.5 | | | V |
| $V_{OL}$ | Low-level output voltage | ROUT | $I_{OL}$ = 3.2mA | | | | 0.4 | V |
| $V_{IT+}$ | Receiver positive-going input threshold voltage | RIN | $V_{CC}$ = 5V | $T_A$ = 25°C | | 1.7 | 2.4 | V |
| $V_{IT–}$ | Receiver negative-going input threshold voltage | RIN | $V_{CC}$ = 5V | $T_A$ = 25°C | 0.8 | 1.2 | | V |
| $V_{hys}$ | Input hysteresis voltage | RIN | $V_{CC}$ = 5V | | 0.2 | 0.5 | 1 | V |
| $r_i$ | Receiver input resistance | RIN | $V_{CC}$ = 5V | $T_A$ = 25°C | 3 | 5 | 7 | kΩ |

(1) Test conditions are C1 – C4 = 1µF at $V_{CC}$ = 5V ± 0.5V.
(2) All typical values are at $V_{CC}$ = 5V and $T_A$ = 25°C.

Copyright © 2024 Texas Instruments Incorporated

## 5.8 Switching Characteristics: Driver

$V_{CC}$ = 5V, $T_A$ = 25°C

| PARAMETER | | TEST CONDITIONS(1) | MIN | TYP | MAX | UNIT |
|---|---|---|---|---|---|---|
| SR | Driver slew rate | $R_L$ = 3kΩ to 7kΩ, See 図 6-2 | | | 30 | V/µs |
| SR(t) | Driver transition region slew rate | $R_L$ = 3kΩ, $C_L$ = 2.5nF<br>See 図 6-3 | | 3 | | V/µs |
| | Data rate | One DOUT switching | | 250 | | kbit/s |

(1) Test conditions are C1 – C4 = 1µF at $V_{CC}$ = 5V ± 0.5V.

## 5.9 Switching Characteristics: Receiver

$V_{CC}$ = 5V, $T_A$ = 25°C (see 図 6-1)

| PARAMETER | | TEST CONDITIONS(1) | TYP | UNIT |
|---|---|---|---|---|
| $t_{PLH(R)}$ | Receiver propagation delay time, low- to high-level output | $C_L$ = 50pF | 500 | ns |
| $t_{PHL(R)}$ | Receiver propagation delay time, high- to low-level output | $C_L$ = 50pF | 500 | ns |

(1) Test conditions are C1 – C4 = 1µF at $V_{CC}$ = 5V ± 0.5V.


Copyright © 2024 Texas Instruments Incorporated

## 5.10 Typical Characteristics

$T_A$ = 25 °C

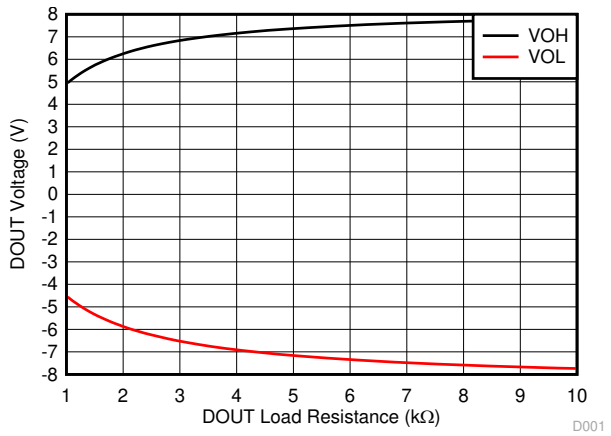


**図 5-1. Driver Output Voltage vs Load Resistance**

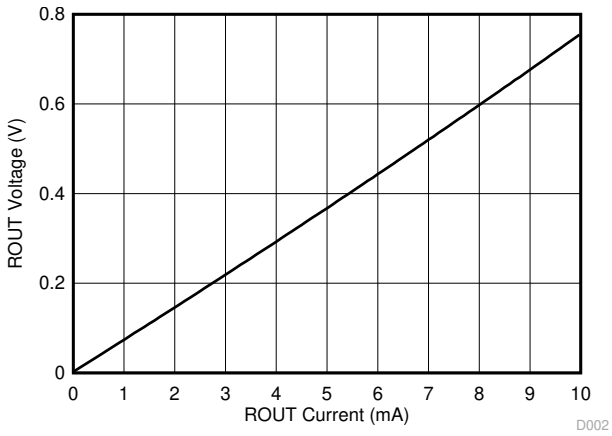


**図 5-2. Receiver Low Output Voltage vs Load Current**

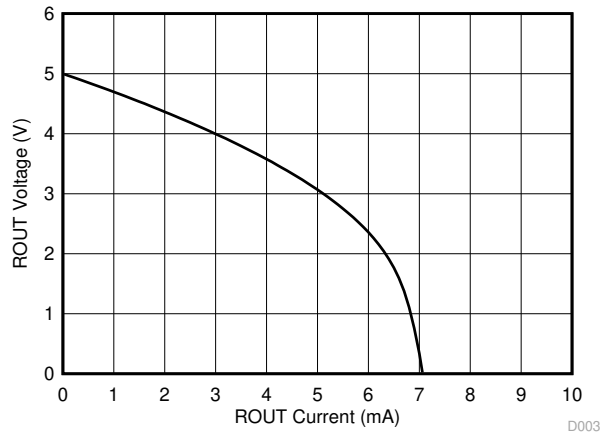


**図 5-3. Receiver High Output Voltage vs Load Current**

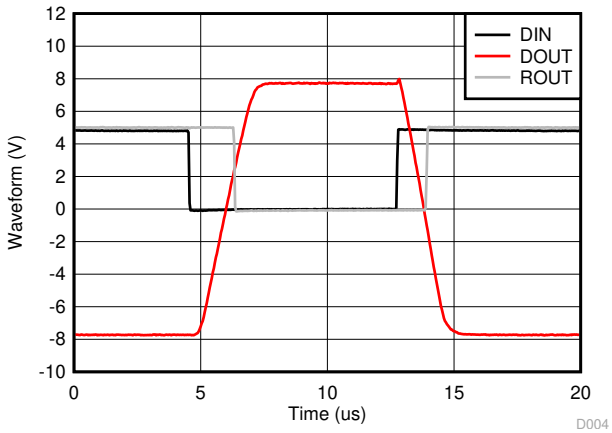


**図 5-4. Loopback Waveforms Data Rate 120 kbit/s**

Copyright © 2024 Texas Instruments Incorporated

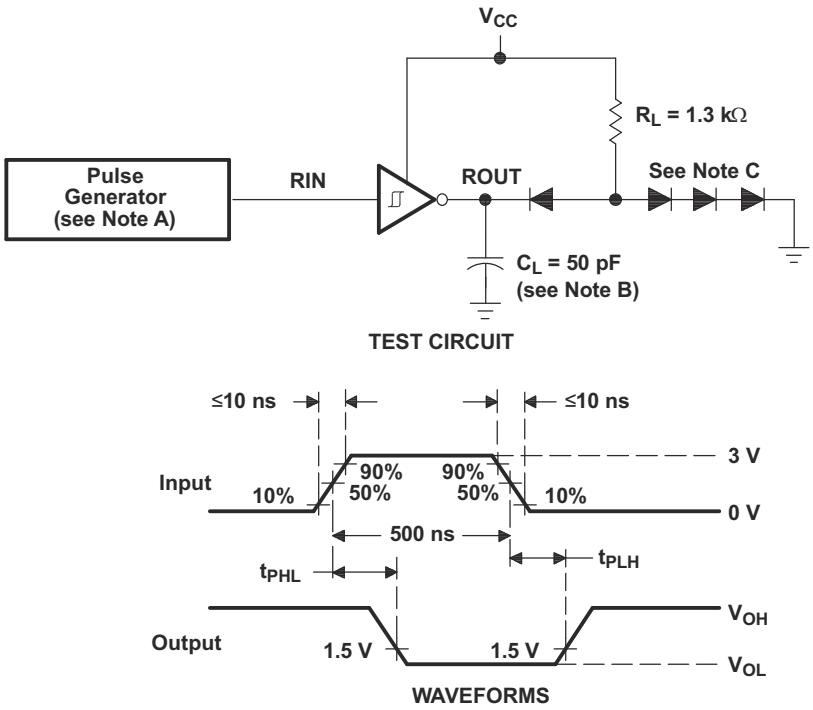


A. The pulse generator has the following characteristics: $Z_O$ = 50Ω, duty cycle ≤ 50%.
B. $C_L$ includes probe and jig capacitance.
C. All diodes are 1N3064 or equivalent.

**図 6-1. Receiver Test Circuit and Waveforms for $t_{PHL}$ and $t_{PLH}$ Measurements**


Copyright © 2024 Texas Instruments Incorporated

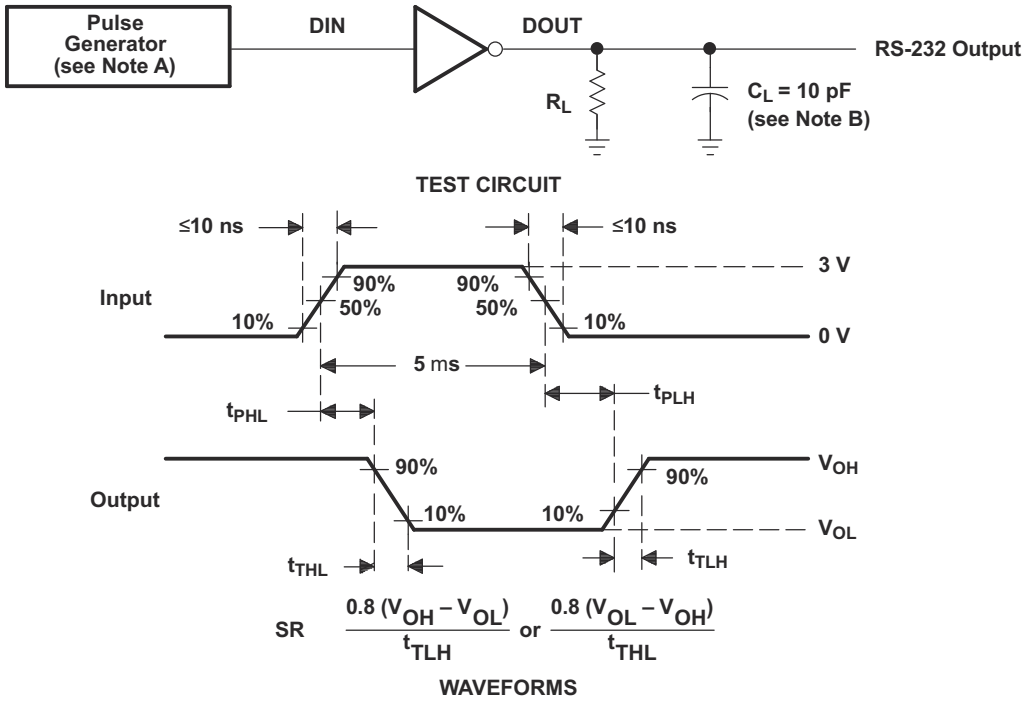


A. The pulse generator has the following characteristics: $Z_O$ = 50Ω, duty cycle ≤ 50%.

B. $C_L$ includes probe and jig capacitance.

**図 6-2. Driver Test Circuit and Waveforms for $t_{PHL}$ and $t_{PLH}$ Measurements (5-µs Input)**

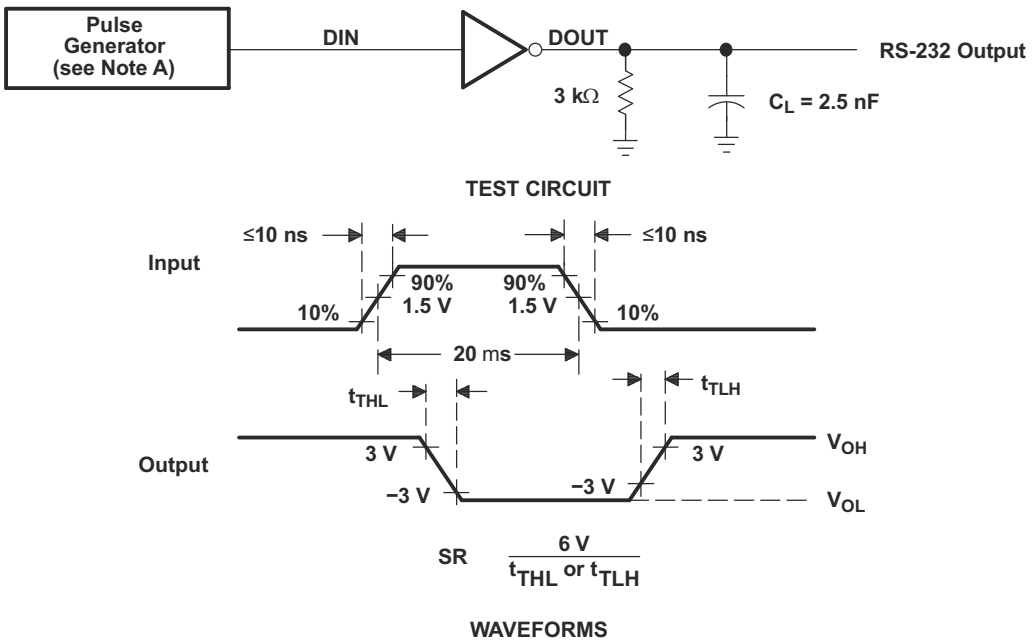


A. The pulse generator has the following characteristics: $Z_O$ = 50Ω, duty cycle ≤ 50%.

**図 6-3. Test Circuit and Waveforms for $t_{THL}$ and $t_{TLH}$ Measurements (20-µs Input)**

Copyright © 2024 Texas Instruments Incorporated

# 6 Detailed Description

## 6.1 Overview

The MAX232E is a dual driver and receiver that includes a capacitive voltage generator using four capacitors to supply TIA/EIA-232-F voltage levels from a single 5V supply. All RS-232 pins have 15kV HBM and IEC61000-4-2 Air-Gap discharge protection. RS-232 pins also have 8kV IEC61000-4-2 contact discharge protection. Each receiver converts TIA/EIA-232-F inputs to 5V TTL/CMOS levels. These receivers have shorted and open fail safe. The receiver can accept up to ±30V inputs and decode inputs as low as ±3 V. Each driver converts TTL/CMOS input levels into TIA/EIA-232-F levels. Outputs are protected against shorts to ground.

## 6.2 Functional Block Diagram

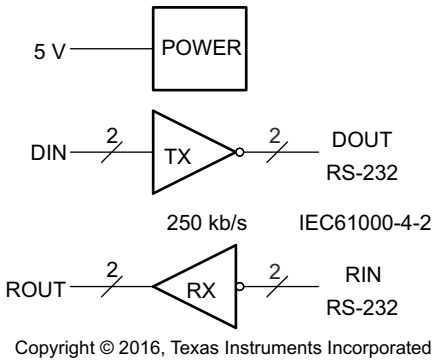


Copyright © 2016, Texas Instruments Incorporated

**図 6-1. Logic Diagram (Positive Logic)**

## 6.3 Feature Description

### 6.3.1 Power

The power block increases and inverts the 5V supply for the RS-232 driver using a charge pump that requires four 1µF external capacitors.

### 6.3.2 RS-232 Driver

Two drivers interface standard logic level to RS-232 levels. Internal pullup resistors on DIN inputs ensures a high input when the line is high impedance.

### 6.3.3 RS-232 Receiver

Two receivers interface RS-232 levels to standard logic levels. An open or shorted to ground input results in a high output on ROUT.


Copyright © 2024 Texas Instruments Incorporated

## 6.4 Device Functional Modes

### 6.4.1 $V_{CC}$ Powered by 5V

The device is in normal operation.

### 6.4.2 $V_{CC}$ Unpowered

When MAX232E is unpowered, it can be safely connected to an active remote RS-232 device.

### 6.4.3 Truth Tables

表 6-1 and 表 6-2 list the functions of this device.

**表 6-1. Function Table for Each Driver**

| INPUT DIN(1) | OUTPUT DOUT |
|---|---|
| L | H |
| H | L |

(1) H = high level, L = low level

**表 6-2. Function Table for Each Receiver**

| INPUT RIN(1) | OUTPUT ROUT |
|---|---|
| L | H |
| H | L |
| Open | H |

(1) H = high level, L = low level, Open = input disconnected or connected driver off

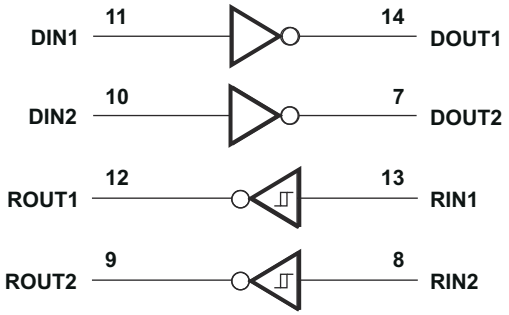


**図 6-2. Logic Diagram (Positive Logic)**

# 7 Applications and Implementation

注

以下のアプリケーション情報は、TI の製品仕様に含まれるものではなく、TI ではその正確性または完全性を保証いたしません。個々の目的に対する製品の適合性については、お客様の責任で判断していただくことになります。また、お客様は自身の設計実装を検証しテストすることで、システムの機能を確認する必要があります。

## 7.1 Application Information

For proper operation add capacitors as shown in 図 7-1. Pins 9 through 12 connect to UART or general purpose logic lines. RS-232 lines on pins 7, 8, 13, and 14 connect to a connector or cable.

## 7.2 Typical Application

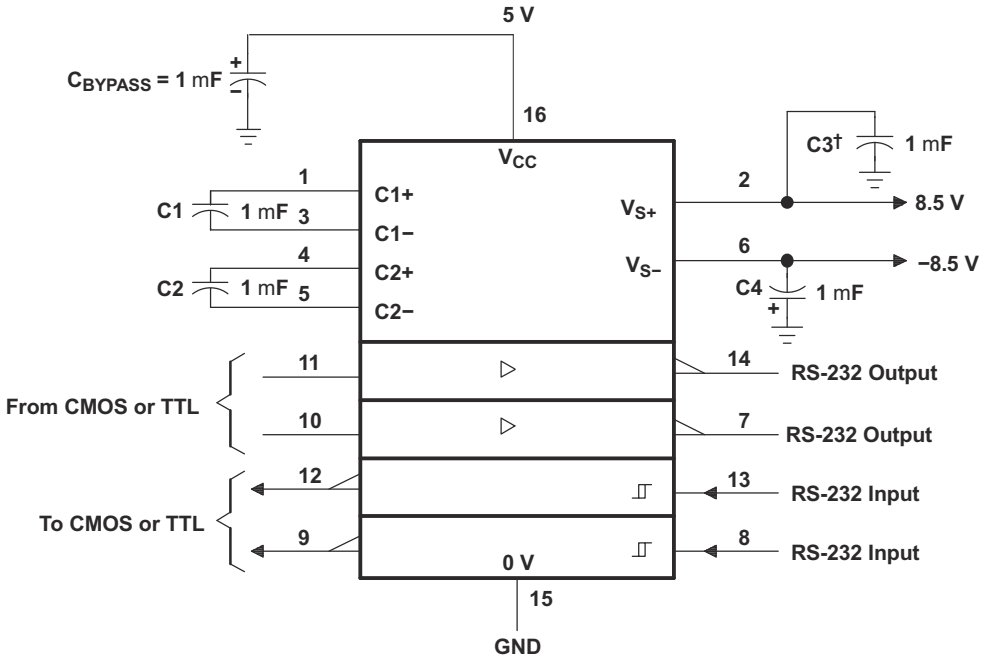


† C3 can be connected to $V_{CC}$ or GND.

Copyright © 2016, Texas Instruments Incorporated

Resistor values shown are nominal.

Nonpolarized ceramic capacitors are acceptable. If polarized tantalum or electrolytic capacitors are used, they should be connected as shown.

**図 7-1. Typical Operating Circuit**

### 7.2.1 Design Requirements

- $V_{CC}$ minimum is 4.5V and maximum is 5.5V.
- Maximum recommended bit rate is 250kbit/s.


Copyright © 2024 Texas Instruments Incorporated

### 7.2.2 Detailed Design Procedure

The capacitor type used for C1–C4 is not critical for proper operation. The MAX232E requires 1µF capacitors, although capacitors up to 10µF can be used without harm. Ceramic dielectrics are suggested for capacitors. When using the minimum recommended capacitor values, make sure the capacitance value does not degrade excessively as the operating temperature varies. If in doubt, use capacitors with a larger (for example, 2×) nominal value. The capacitors' effective series resistance (ESR), which usually rises at low temperatures, influences the amount of ripple on V+ and V–.

Use larger capacitors (up to 10µF) to reduce the output impedance at $V_{S+}$ and $V_{S–}$.

Bypass $V_{CC}$ to ground with at least 1 µF. In applications sensitive to power-supply noise generated by the charge pumps, decouple $V_{CC}$ to ground with a capacitor the same size as (or larger than) the charge-pump capacitors (C1–C4).

### 7.2.3 Application Curve

Loopback waveform connects DOUT to RIN.

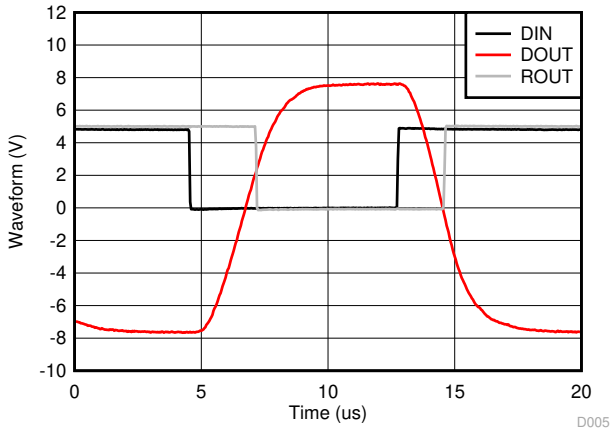


Date Rate = 120 kbit/s, $C_L$ = 1 nF

**図 7-2. Loopback Waveforms**

## 7.3 Power Supply Recommendations

The $V_{CC}$ voltage should be connected to the same power source used for logic device connected to DIN and ROUT pins. $V_{CC}$ should be between 4.5V and 5.5V.

Copyright © 2024 Texas Instruments Incorporated

## 7.4 Layout

### 7.4.1 Layout Guidelines

Keep the external capacitor traces short. This is more important on C1 and C2 nodes that have the fastest rise and fall times. Make the impedance from MAX232E ground pin and circuit board ground plane as low as possible for best ESD performance. Use wide metal and multiple vias on both sides of ground pin.

### 7.4.2 Layout Example

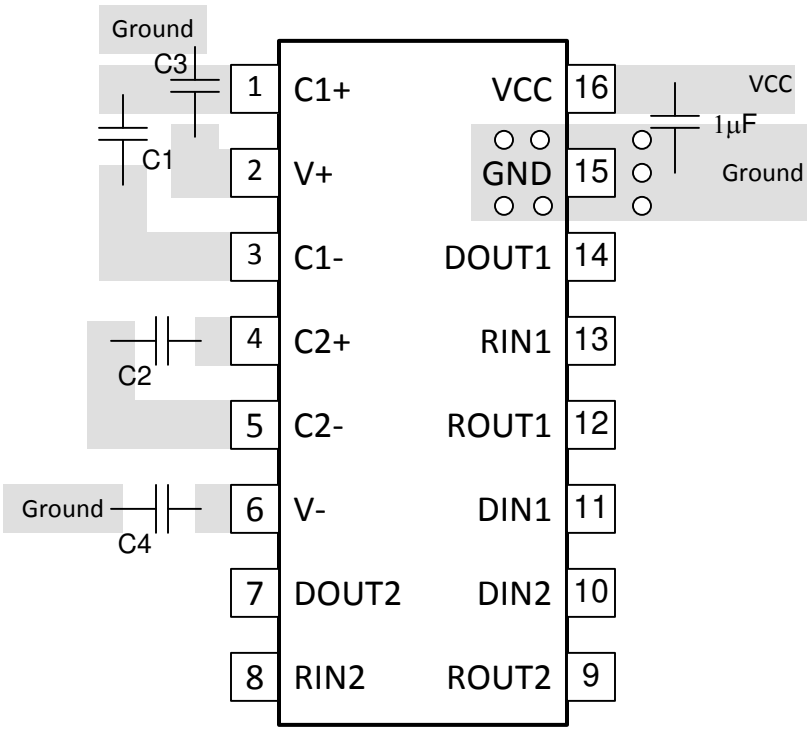


**図 7-3. MAX232E Layout**


Copyright © 2024 Texas Instruments Incorporated

# 8 Device and Documentation Support

## 8.1 ドキュメントの更新通知を受け取る方法

ドキュメントの更新についての通知を受け取るには、ti.com のデバイス製品フォルダを開いてください。*「更新の通知を受け取る」をクリック*して登録すると、変更されたすべての製品情報に関するダイジェストを毎週受け取れます。変更の詳細については、修正されたドキュメントに含まれている改訂履歴をご覧ください。

## 8.2 サポート・リソース

TI E2E™ サポート・フォーラムは、エンジニアが検証済みの回答と設計に関するヒントをエキスパートから迅速かつ直接得ることができる場所です。既存の回答を検索したり、独自の質問をしたりすることで、設計で必要な支援を迅速に得ることができます。

リンクされているコンテンツは、該当する貢献者により、現状のまま提供されるものです。これらは TI の仕様を構成するものではなく、必ずしも TI の見解を反映したものではありません。TI の使用条件を参照してください。

## 8.3 Trademarks

TI E2E™ is a trademark of Texas Instruments.
すべての商標は、それぞれの所有者に帰属します。

## 8.4 静電気放電に関する注意事項



この IC は、ESD によって破損する可能性があります。テキサス・インスツルメンツは、IC を取り扱う際には常に適切な注意を払うことを推奨します。正しい ESD 対策をとらないと、デバイスを破損するおそれがあります。

ESD による破損は、わずかな性能低下からデバイスの完全な故障まで多岐にわたります。精密な IC の場合、パラメータがわずかに変化するだけで公表されている仕様から外れる可能性があるため、破損が発生しやすくなっています。

## 8.5 用語集

TI 用語集　この用語集には、用語や略語の一覧および定義が記載されています。

# 9 Revision History

資料番号末尾の英字は改訂を表しています。その改訂履歴は英語版に準じています。

| Changes from Revision C (August 2016) to Revision D (February 2024) | Page |
|---|---|
| • 「製品情報」表を「パッケージ情報」表に変更 | 1 |
| • Changed the *Thermal Information* table | 5 |

| Changes from Revision B (November 2009) to Revision C (August 2016) | Page |
|---|---|
| • 「ESD 定格」表、「機能説明」セクション、「デバイスの機能モード」セクション、「アプリケーションと実装」セクション、「電源に関する推奨事項」セクション、「レイアウト」セクション、「デバイスおよびドキュメントのサポート」セクション、「メカニカル、パッケージ、および注文情報」セクションを追加。 | 1 |
| • 「特長」から「±30V 入力レベル」を削除 | 1 |
| • 「注文情報」表を削除 (データシートの末尾にある POA を参照) | 1 |
| • Added MIN value ±3 to "Receiver input voltage (RIN1, RIN2) row in *Recommended Operating Conditions* | 4 |
| • Changed $R_{\theta JA}$ values in *Thermal Information* | 5 |
| • Deleted table note 3 from *Receiver Section Electrical Characteristics* | 5 |
| • Added a new row to the *Function Table for Each Receiver* | 11 |

Copyright © 2024 Texas Instruments Incorporated

## 10 Mechanical, Packaging, and Orderable Information

The following pages include mechanical, packaging, and orderable information. This information is the most current data available for the designated devices. This data is subject to change without notice and revision of this document. For browser-based versions of this data sheet, refer to the left-hand navigation.


Copyright © 2024 Texas Instruments Incorporated

# 重要なお知らせと免責事項

テキサス・インスツルメンツは、技術データと信頼性データ (データシートを含みます)、設計リソース (リファレンス デザインを含みます)、アプリケーションや設計に関する各種アドバイス、Web ツール、安全性情報、その他のリソースを、欠陥が存在する可能性のある「現状のまま」提供しており、商品性および特定目的に対する適合性の黙示保証、第三者の知的財産権の非侵害保証を含むいかなる保証も、明示的または黙示的にかかわらず拒否します。

これらのリソースは、テキサス・インスツルメンツ製品を使用する設計の経験を積んだ開発者への提供を意図したものです。(1) お客様のアプリケーションに適した テキサス・インスツルメンツ製品の選定、(2) お客様のアプリケーションの設計、検証、試験、(3) お客様のアプリケーションに該当する各種規格や、その他のあらゆる安全性、セキュリティ、規制、または他の要件への確実な適合に関する責任を、お客様のみが単独で負うものとします。

上記の各種リソースは、予告なく変更される可能性があります。これらのリソースは、リソースで説明されている テキサス・インスツルメンツ製品を使用するアプリケーションの開発の目的でのみ、テキサス・インスツルメンツはその使用をお客様に許諾します。これらのリソースに関して、他の目的で複製することや掲載することは禁止されています。テキサス・インスツルメンツや第三者の知的財産権のライセンスが付与されている訳ではありません。お客様は、これらのリソースを自身で使用した結果発生するあらゆる申し立て、損害、費用、損失、責任について、テキサス・インスツルメンツおよびその代理人を完全に補償するものとし、テキサス・インスツルメンツは一切の責任を拒否します。

テキサス・インスツルメンツの製品は、テキサス・インスツルメンツの販売条件、または ti.com やかかる テキサス・インスツルメンツ製品の関連資料などのいずれかを通じて提供する適用可能な条項の下で提供されています。テキサス・インスツルメンツがこれらのリソースを提供することは、適用されるテキサス・インスツルメンツの保証または他の保証の放棄の拡大や変更を意味するものではありません。

お客様がいかなる追加条項または代替条項を提案した場合でも、テキサス・インスツルメンツはそれらに異議を唱え、拒否します。

郵送先住所:Texas Instruments, Post Office Box 655303, Dallas, Texas 75265
Copyright © 2024, Texas Instruments Incorporated

## PACKAGING INFORMATION

| Orderable part number | Status (1) | Material type (2) | Package \| Pins | Package qty \| Carrier | RoHS (3) | Lead finish/ Ball material (4) | MSL rating/ Peak reflow (5) | Op temp (°C) | Part marking (6) |
|---|---|---|---|---|---|---|---|---|---|
| MAX232ECD | Obsolete | Production | SOIC (D) \| 16 | - | - | Call TI | Call TI | 0 to 70 | MAX232EC |
| MAX232ECDR | Active | Production | SOIC (D) \| 16 | 2500 \| LARGE T&R | Yes | NIPDAU | Level-1-260C-UNLIM | 0 to 70 | MAX232EC |
| MAX232ECDR.A | Active | Production | SOIC (D) \| 16 | 2500 \| LARGE T&R | Yes | NIPDAU | Level-1-260C-UNLIM | 0 to 70 | MAX232EC |
| MAX232ECDW | Obsolete | Production | SOIC (DW) \| 16 | - | - | Call TI | Call TI | 0 to 70 | MAX232EC |
| MAX232ECDWR | Obsolete | Production | SOIC (DW) \| 16 | - | - | Call TI | Call TI | 0 to 70 | MAX232EC |
| MAX232ECDWRG4 | Obsolete | Production | SOIC (DW) \| 16 | - | - | Call TI | Call TI | 0 to 70 | |
| MAX232ECN | Obsolete | Production | PDIP (N) \| 16 | - | - | Call TI | Call TI | 0 to 70 | MAX232ECN |
| MAX232ECPW | Obsolete | Production | TSSOP (PW) \| 16 | - | - | Call TI | Call TI | 0 to 70 | MA232EC |
| MAX232ECPWR | Obsolete | Production | TSSOP (PW) \| 16 | - | - | Call TI | Call TI | 0 to 70 | MA232EC |
| MAX232ECPWRG4 | Obsolete | Production | TSSOP (PW) \| 16 | - | - | Call TI | Call TI | 0 to 70 | MA232EC |
| MAX232EID | Obsolete | Production | SOIC (D) \| 16 | - | - | Call TI | Call TI | -40 to 85 | MAX232EI |
| MAX232EIDR | Active | Production | SOIC (D) \| 16 | 2500 \| LARGE T&R | Yes | NIPDAU | Level-1-260C-UNLIM | -40 to 85 | MAX232EI |
| MAX232EIDR.A | Active | Production | SOIC (D) \| 16 | 2500 \| LARGE T&R | Yes | NIPDAU | Level-1-260C-UNLIM | -40 to 85 | MAX232EI |
| MAX232EIDRG4 | Active | Production | SOIC (D) \| 16 | 2500 \| LARGE T&R | Yes | NIPDAU | Level-1-260C-UNLIM | -40 to 85 | MAX232EI |
| MAX232EIDRG4.A | Active | Production | SOIC (D) \| 16 | 2500 \| LARGE T&R | Yes | NIPDAU | Level-1-260C-UNLIM | -40 to 85 | MAX232EI |
| MAX232EIDW | Obsolete | Production | SOIC (DW) \| 16 | - | - | Call TI | Call TI | -40 to 85 | MAX232EI |
| MAX232EIDWR | Active | Production | SOIC (DW) \| 16 | 2000 \| LARGE T&R | Yes | NIPDAU | Level-1-260C-UNLIM | -40 to 85 | MAX232EI |
| MAX232EIDWR.A | Active | Production | SOIC (DW) \| 16 | 2000 \| LARGE T&R | Yes | NIPDAU | Level-1-260C-UNLIM | -40 to 85 | MAX232EI |
| MAX232EIN | Active | Production | PDIP (N) \| 16 | 25 \| TUBE | Yes | NIPDAU | N/A for Pkg Type | -40 to 85 | MAX232EIN |
| MAX232EIN.A | Active | Production | PDIP (N) \| 16 | 25 \| TUBE | Yes | NIPDAU | N/A for Pkg Type | -40 to 85 | MAX232EIN |
| MAX232EINE4 | Active | Production | PDIP (N) \| 16 | 25 \| TUBE | Yes | NIPDAU | N/A for Pkg Type | -40 to 85 | MAX232EIN |
| MAX232EIPWR | Active | Production | TSSOP (PW) \| 16 | 2000 \| LARGE T&R | Yes | NIPDAU \| SN | Level-1-260C-UNLIM | -40 to 85 | MB232EI |
| MAX232EIPWR.A | Active | Production | TSSOP (PW) \| 16 | 2000 \| LARGE T&R | Yes | NIPDAU | Level-1-260C-UNLIM | -40 to 85 | MB232EI |
| MAX232EIPWRG4 | Active | Production | TSSOP (PW) \| 16 | 2000 \| LARGE T&R | Yes | NIPDAU | Level-1-260C-UNLIM | -40 to 85 | MB232EI |
| MAX232EIPWRG4.A | Active | Production | TSSOP (PW) \| 16 | 2000 \| LARGE T&R | Yes | NIPDAU | Level-1-260C-UNLIM | -40 to 85 | MB232EI |

(1) **Status:** For more details on status, see our product life cycle.

(2) **Material type:** When designated, preproduction parts are prototypes/experimental devices, and are not yet approved or released for full production. Testing and final process, including without limitation quality assurance, reliability performance testing, and/or process qualification, may not yet be complete, and this item is subject to further changes or possible discontinuation. If available for ordering, purchases will be subject to an additional waiver at checkout, and are intended for early internal evaluation purposes only. These items are sold without warranties of any kind.

(3) **RoHS values:** Yes, No, RoHS Exempt. See the TI RoHS Statement for additional information and value definition.

(4) **Lead finish/Ball material:** Parts may have multiple material finish options. Finish options are separated by a vertical ruled line. Lead finish/Ball material values may wrap to two lines if the finish value exceeds the maximum column width.

(5) **MSL rating/Peak reflow:** The moisture sensitivity level ratings and peak solder (reflow) temperatures. In the event that a part has multiple moisture sensitivity ratings, only the lowest level per JEDEC standards is shown. Refer to the shipping label for the actual reflow temperature that will be used to mount the part to the printed circuit board.

(6) **Part marking:** There may be an additional marking, which relates to the logo, the lot trace code information, or the environmental category of the part.

Multiple part markings will be inside parentheses. Only one part marking contained in parentheses and separated by a "~" will appear on a part. If a line is indented then it is a continuation of the previous line and the two combined represent the entire part marking for that device.

**Important Information and Disclaimer:**The information provided on this page represents TI's knowledge and belief as of the date that it is provided. TI bases its knowledge and belief on information provided by third parties, and makes no representation or warranty as to the accuracy of such information. Efforts are underway to better integrate information from third parties. TI has taken and continues to take reasonable steps to provide representative and accurate information but may not have conducted destructive testing or chemical analysis on incoming materials and chemicals. TI and TI suppliers consider certain information to be proprietary, and thus CAS numbers and other limited information may not be available for release.

In no event shall TI's liability arising out of such information exceed the total purchase price of the TI part(s) at issue in this document sold by TI to Customer on an annual basis.

## TAPE AND REEL INFORMATION

**REEL DIMENSIONS**

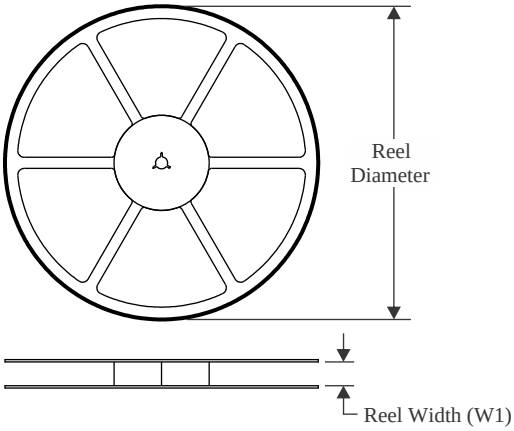


**TAPE DIMENSIONS**

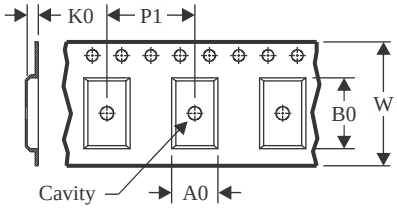


| | |
|---|---|
| A0 | Dimension designed to accommodate the component width |
| B0 | Dimension designed to accommodate the component length |
| K0 | Dimension designed to accommodate the component thickness |
| W | Overall width of the carrier tape |
| P1 | Pitch between successive cavity centers |

**QUADRANT ASSIGNMENTS FOR PIN 1 ORIENTATION IN TAPE**

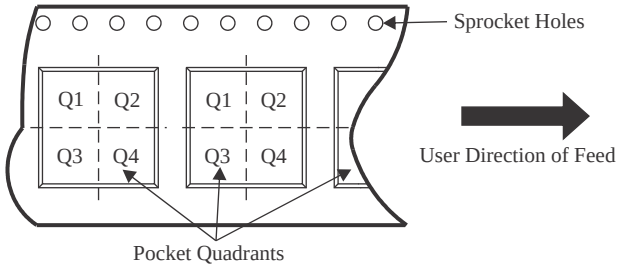


*All dimensions are nominal

| Device | Package Type | Package Drawing | Pins | SPQ | Reel Diameter (mm) | Reel Width W1 (mm) | A0 (mm) | B0 (mm) | K0 (mm) | P1 (mm) | W (mm) | Pin1 Quadrant |
|---|---|---|---|---|---|---|---|---|---|---|---|---|
| MAX232ECDR | SOIC | D | 16 | 2500 | 330.0 | 16.4 | 6.5 | 10.3 | 2.1 | 8.0 | 16.0 | Q1 |
| MAX232ECDR | SOIC | D | 16 | 2500 | 330.0 | 16.4 | 6.5 | 10.3 | 2.1 | 8.0 | 16.0 | Q1 |
| MAX232EIDR | SOIC | D | 16 | 2500 | 330.0 | 16.4 | 6.5 | 10.3 | 2.1 | 8.0 | 16.0 | Q1 |
| MAX232EIDRG4 | SOIC | D | 16 | 2500 | 330.0 | 16.4 | 6.5 | 10.3 | 2.1 | 8.0 | 16.0 | Q1 |
| MAX232EIDWR | SOIC | DW | 16 | 2000 | 330.0 | 16.4 | 10.75 | 10.7 | 2.7 | 12.0 | 16.0 | Q1 |
| MAX232EIPWR | TSSOP | PW | 16 | 2000 | 330.0 | 12.4 | 6.9 | 5.6 | 1.6 | 8.0 | 12.0 | Q1 |
| MAX232EIPWR | TSSOP | PW | 16 | 2000 | 330.0 | 12.4 | 6.9 | 5.6 | 1.6 | 8.0 | 12.0 | Q1 |
| MAX232EIPWRG4 | TSSOP | PW | 16 | 2000 | 330.0 | 12.4 | 6.9 | 5.6 | 1.6 | 8.0 | 12.0 | Q1 |

TAPE AND REEL BOX DIMENSIONS

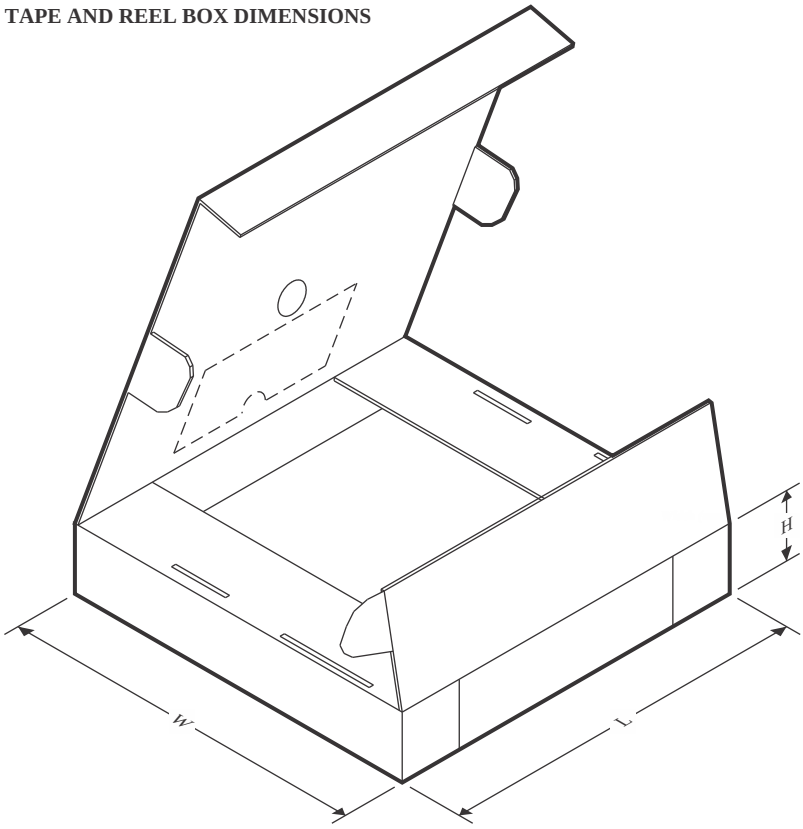


*All dimensions are nominal

| Device | Package Type | Package Drawing | Pins | SPQ | Length (mm) | Width (mm) | Height (mm) |
|---|---|---|---|---|---|---|---|
| MAX232ECDR | SOIC | D | 16 | 2500 | 340.5 | 336.1 | 32.0 |
| MAX232ECDR | SOIC | D | 16 | 2500 | 333.2 | 345.9 | 28.6 |
| MAX232EIDR | SOIC | D | 16 | 2500 | 353.0 | 353.0 | 32.0 |
| MAX232EIDRG4 | SOIC | D | 16 | 2500 | 353.0 | 353.0 | 32.0 |
| MAX232EIDWR | SOIC | DW | 16 | 2000 | 350.0 | 350.0 | 43.0 |
| MAX232EIPWR | TSSOP | PW | 16 | 2000 | 356.0 | 356.0 | 35.0 |
| MAX232EIPWR | TSSOP | PW | 16 | 2000 | 353.0 | 353.0 | 32.0 |
| MAX232EIPWRG4 | TSSOP | PW | 16 | 2000 | 353.0 | 353.0 | 32.0 |

## TUBE

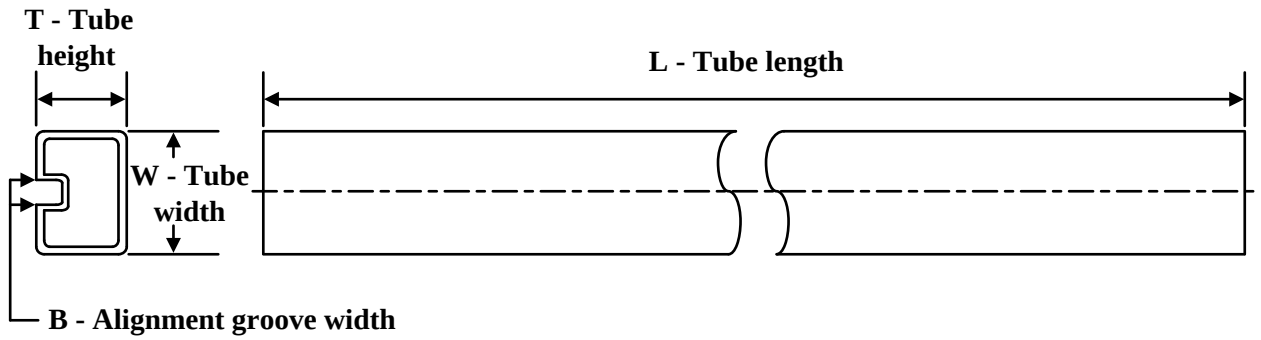


*All dimensions are nominal

| Device | Package Name | Package Type | Pins | SPQ | L (mm) | W (mm) | T (µm) | B (mm) |
|---|---|---|---|---|---|---|---|---|
| MAX232EIN | N | PDIP | 16 | 25 | 506 | 13.97 | 11230 | 4.32 |
| MAX232EIN.A | N | PDIP | 16 | 25 | 506 | 13.97 | 11230 | 4.32 |
| MAX232EINE4 | N | PDIP | 16 | 25 | 506 | 13.97 | 11230 | 4.32 |

# GENERIC PACKAGE VIEW

## DW 16

## SOIC - 2.65 mm max height

**7.5 x 10.3, 1.27 mm pitch**

SMALL OUTLINE INTEGRATED CIRCUIT

This image is a representation of the package family, actual package may vary.
Refer to the product data sheet for package details.

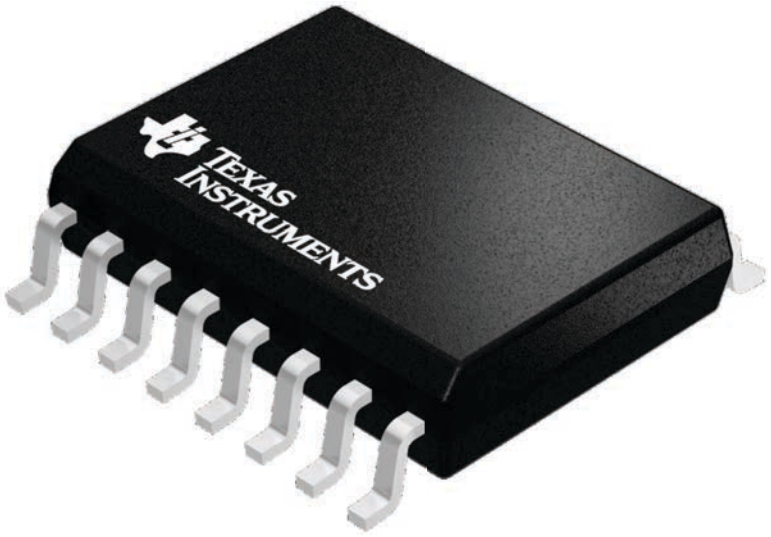


4224780/A

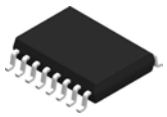

# PACKAGE OUTLINE

## DW0016A

## SOIC - 2.65 mm max height

SOIC

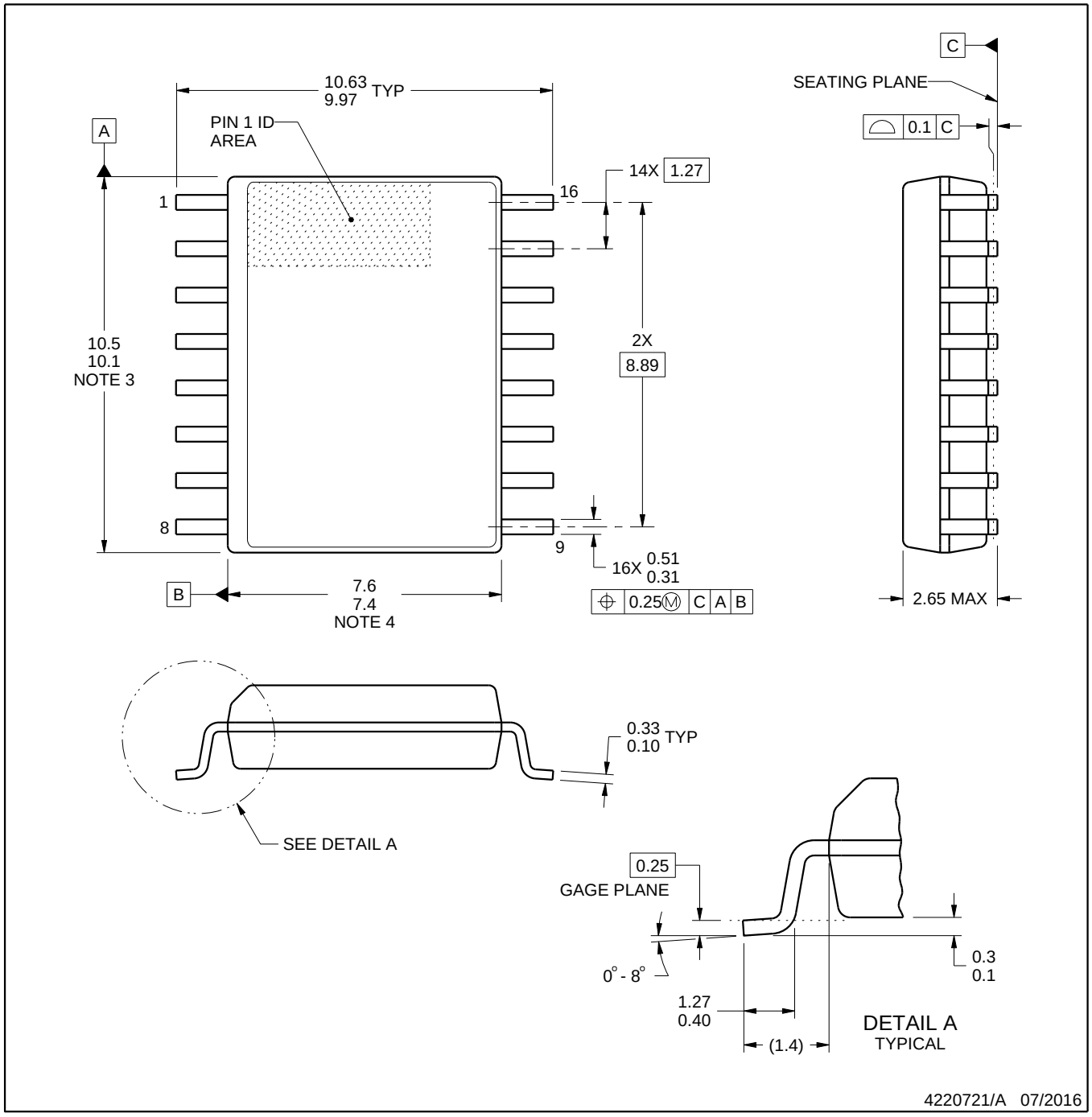


NOTES:

1. All linear dimensions are in millimeters. Dimensions in parenthesis are for reference only. Dimensioning and tolerancing per ASME Y14.5M.
2. This drawing is subject to change without notice.
3. This dimension does not include mold flash, protrusions, or gate burrs. Mold flash, protrusions, or gate burrs shall not exceed 0.15 mm, per side.
4. This dimension does not include interlead flash. Interlead flash shall not exceed 0.25 mm, per side.
5. Reference JEDEC registration MS-013.

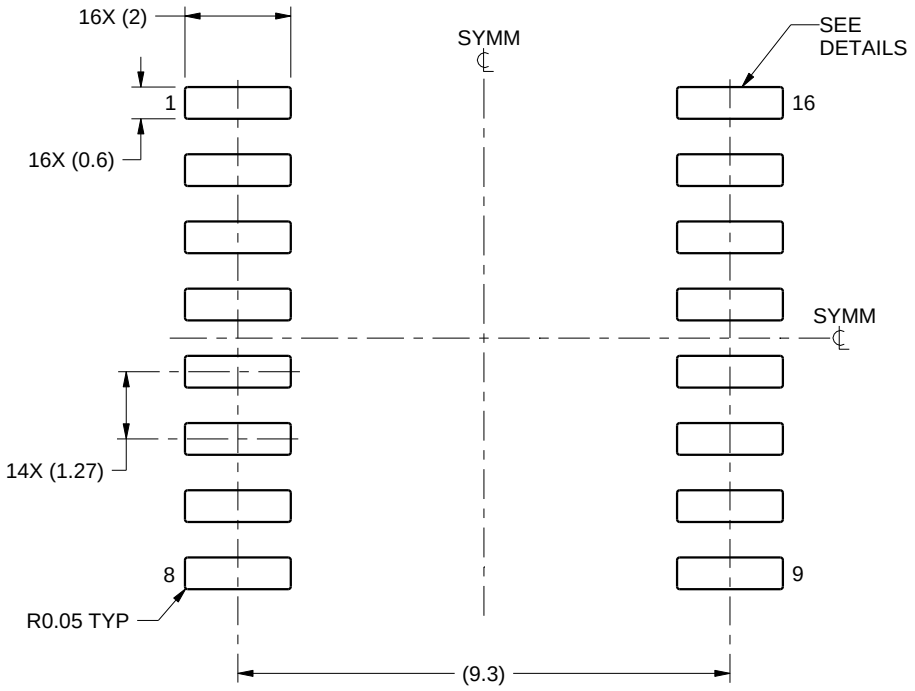


LAND PATTERN EXAMPLE
SCALE:7X

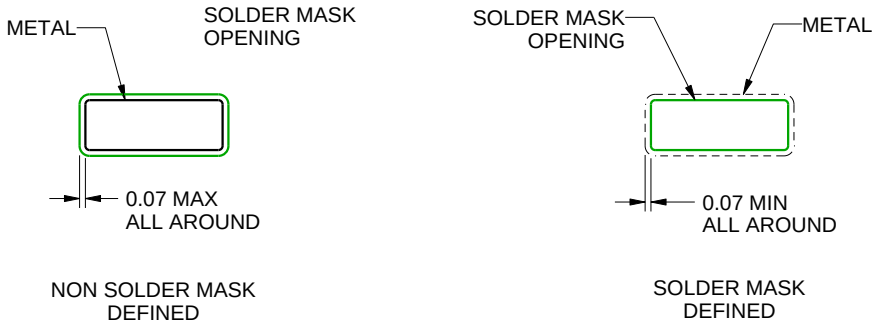


SOLDER MASK DETAILS

4220721/A 07/2016

NOTES: (continued)

6. Publication IPC-7351 may have alternate designs.
7. Solder mask tolerances between and around signal pads can vary based on board fabrication site.

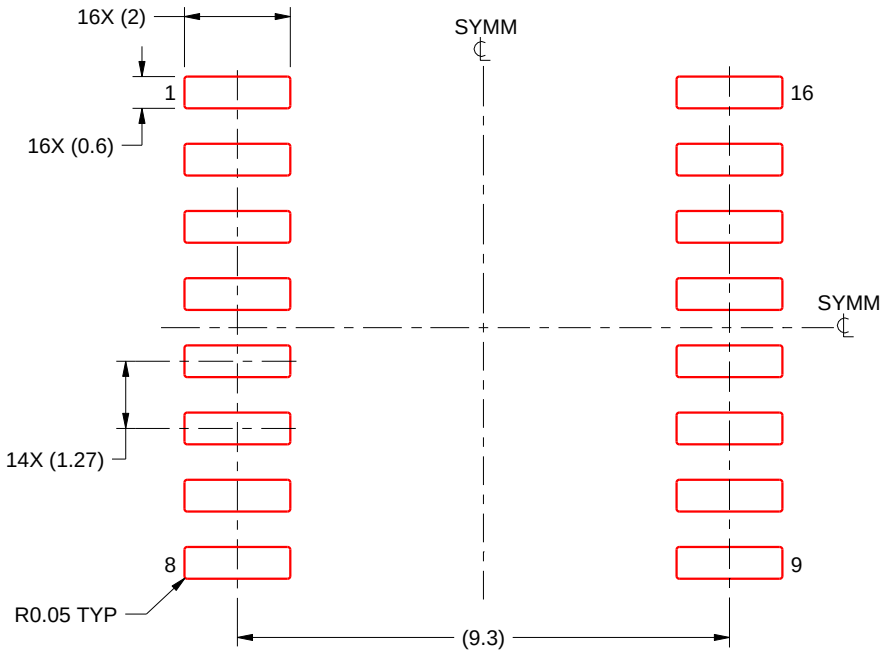


SOLDER PASTE EXAMPLE
BASED ON 0.125 mm THICK STENCIL
SCALE:7X

4220721/A 07/2016

NOTES: (continued)

8. Laser cutting apertures with trapezoidal walls and rounded corners may offer better paste release. IPC-7525 may have alternate design recommendations.
9. Board assembly site may have different recommendations for stencil design.

# PACKAGE OUTLINE

## PW0016A

## TSSOP - 1.2 mm max height

SMALL OUTLINE PACKAGE

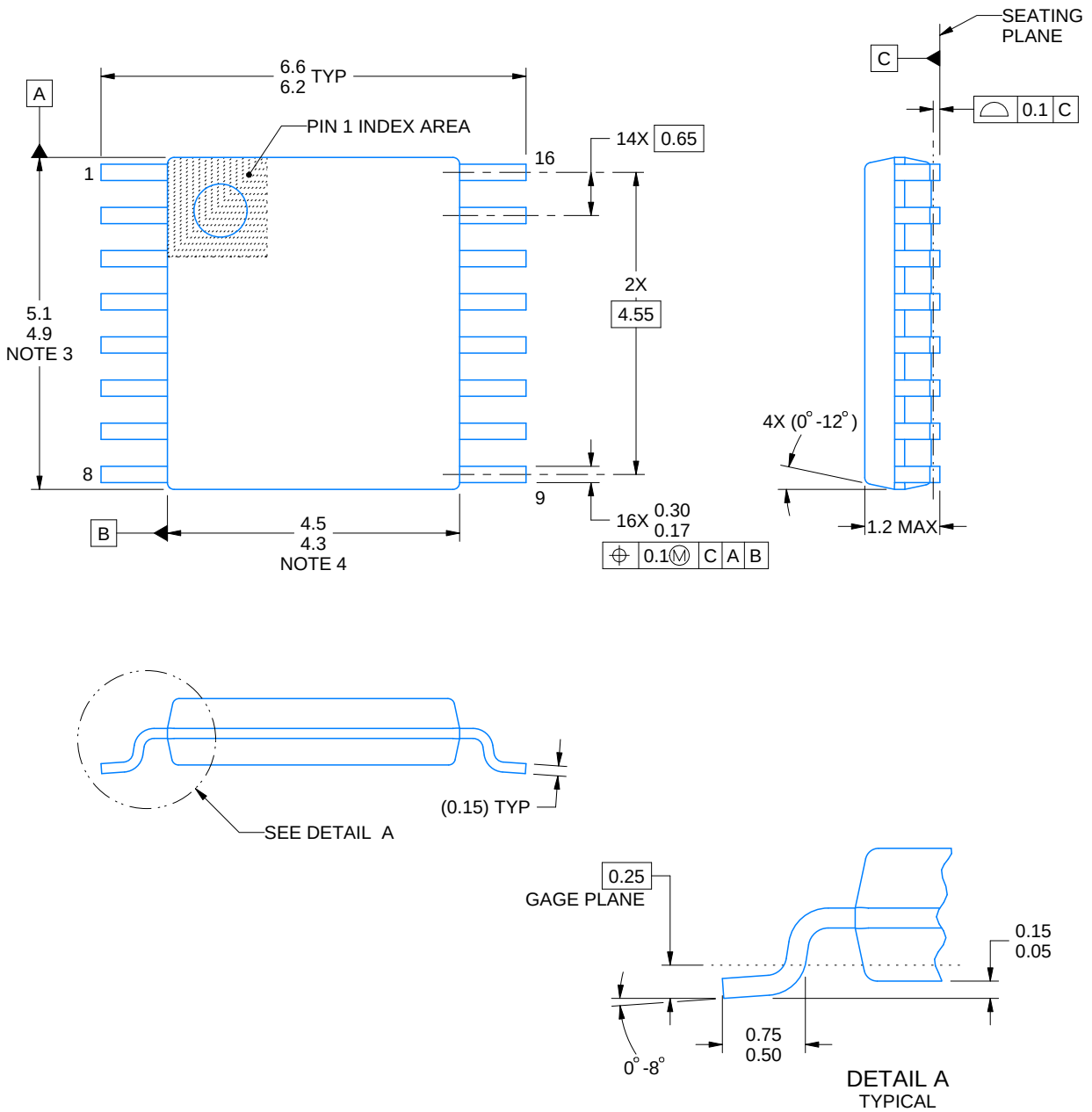


NOTES:

1. All linear dimensions are in millimeters. Any dimensions in parenthesis are for reference only. Dimensioning and tolerancing per ASME Y14.5M.
2. This drawing is subject to change without notice.
3. This dimension does not include mold flash, protrusions, or gate burrs. Mold flash, protrusions, or gate burrs shall not exceed 0.15 mm per side.
4. This dimension does not include interlead flash. Interlead flash shall not exceed 0.25 mm per side.
5. Reference JEDEC registration MO-153.

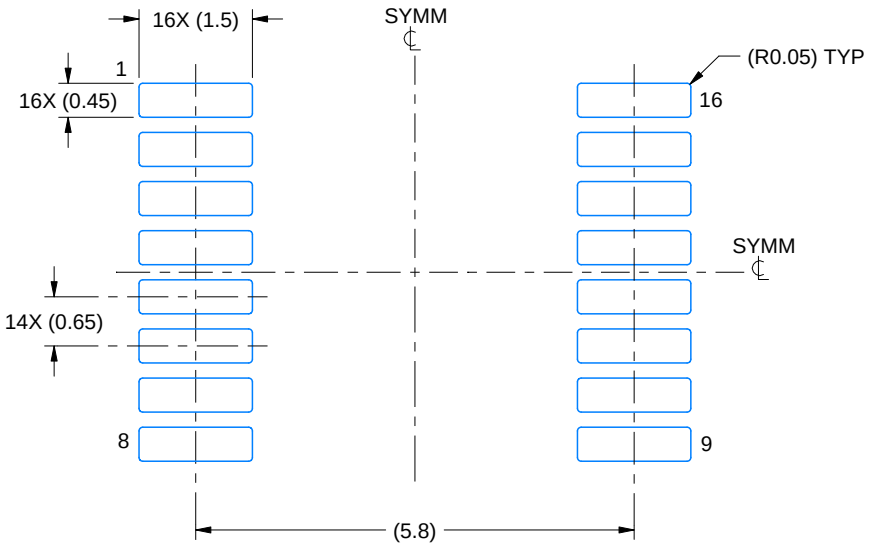


LAND PATTERN EXAMPLE
EXPOSED METAL SHOWN
SCALE: 10X




SOLDER MASK DETAILS

4220204/B 12/2023

NOTES: (continued)

6. Publication IPC-7351 may have alternate designs.
7. Solder mask tolerances between and around signal pads can vary based on board fabrication site.

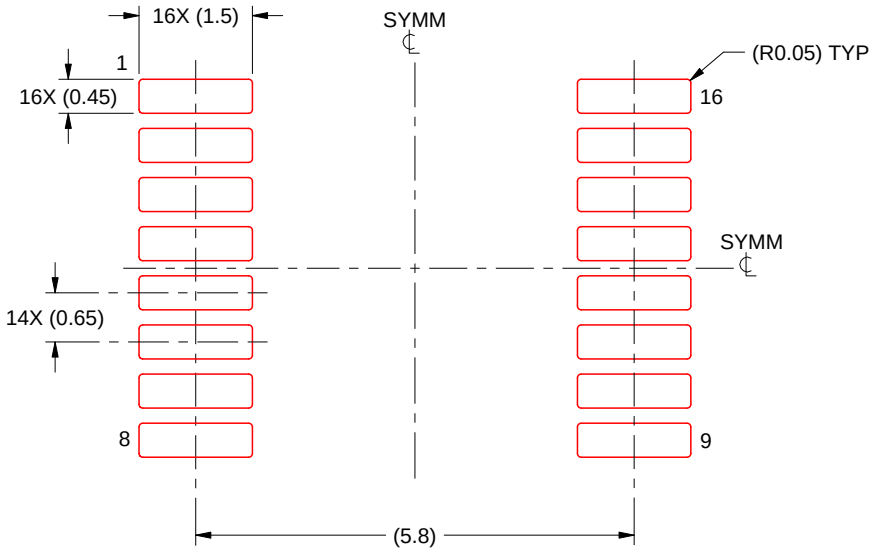


SOLDER PASTE EXAMPLE
BASED ON 0.125 mm THICK STENCIL
SCALE: 10X

4220204/B 12/2023

NOTES: (continued)

8. Laser cutting apertures with trapezoidal walls and rounded corners may offer better paste release. IPC-7525 may have alternate design recommendations.
9. Board assembly site may have different recommendations for stencil design.

## N (R–PDIP–T**)

## PLASTIC DUAL–IN–LINE PACKAGE

16 PINS SHOWN

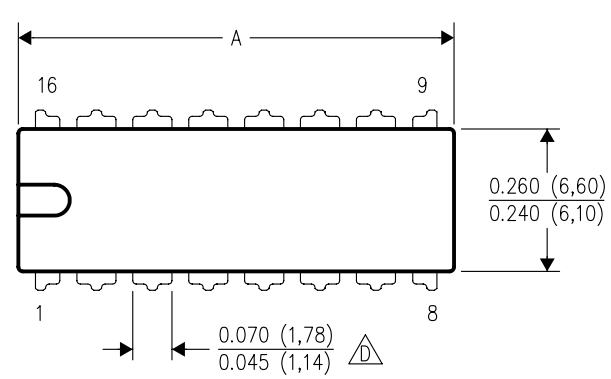


| DIM \ PINS ** | 14 | 16 | 18 | 20 |
|---|---|---|---|---|
| A MAX | 0.775 (19,69) | 0.775 (19,69) | 0.920 (23,37) | 1.060 (26,92) |
| A MIN | 0.745 (18,92) | 0.745 (18,92) | 0.850 (21,59) | 0.940 (23,88) |
| MS–001 VARIATION (C) | AA | BB | AC | AD |

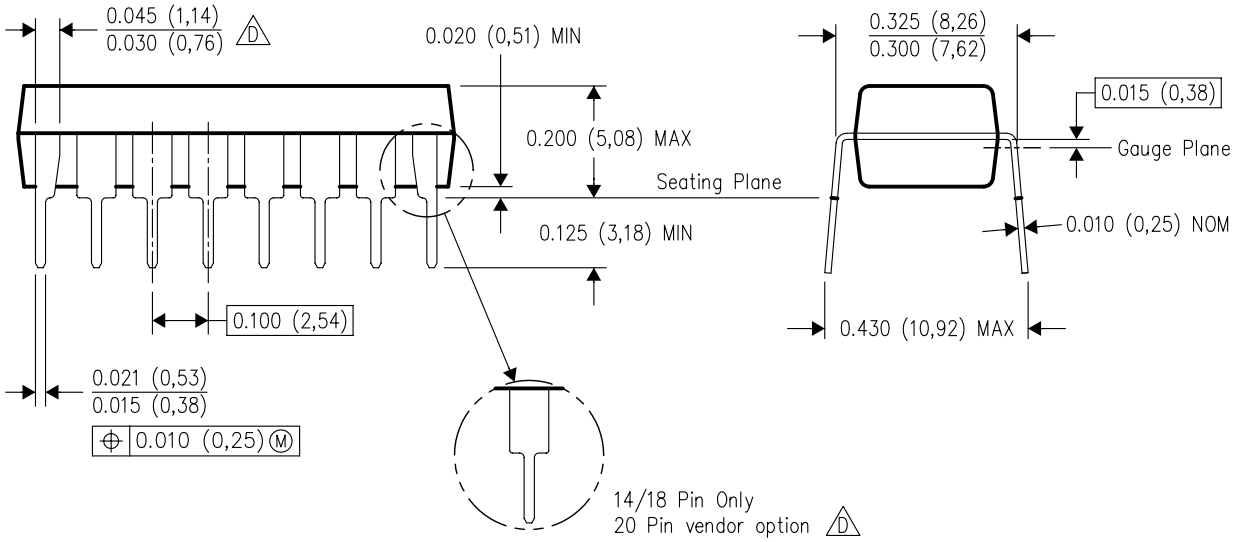


4040049/E 12/2002

NOTES:
A. All linear dimensions are in inches (millimeters).
B. This drawing is subject to change without notice.
C. Falls within JEDEC MS–001, except 18 and 20 pin minimum body length (Dim A).
D. The 20 pin end lead shoulder width is a vendor option, either half or full width.

D (R–PDSO–G16) PLASTIC SMALL OUTLINE

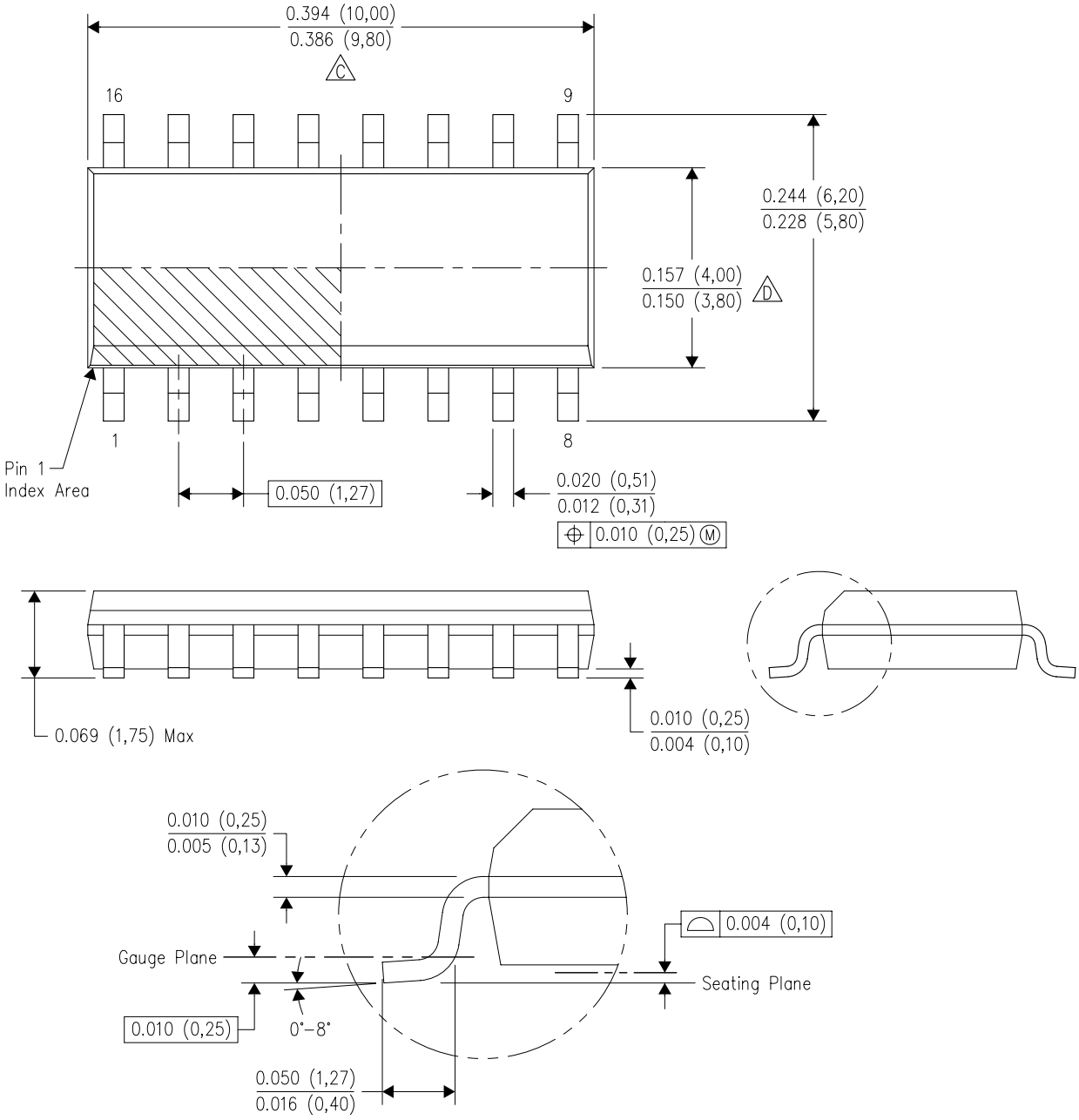


NOTES:
A. All linear dimensions are in inches (millimeters).
B. This drawing is subject to change without notice.
C. Body length does not include mold flash, protrusions, or gate burrs. Mold flash, protrusions, or gate burrs shall not exceed 0.006 (0,15) each side.
D. Body width does not include interlead flash. Interlead flash shall not exceed 0.017 (0,43) each side.
E. Reference JEDEC MS–012 variation AC.

# 重要なお知らせと免責事項

TI は、技術データと信頼性データ (データシートを含みます)、設計リソース (リファレンス デザインを含みます)、アプリケーションや設計に関する各種アドバイス、Web ツール、安全性情報、その他のリソースを、欠陥が存在する可能性のある「現状のまま」提供しており、商品性および特定目的に対する適合性の黙示保証、第三者の知的財産権の非侵害保証を含むいかなる保証も、明示的または黙示的にかかわらず拒否します。

これらのリソースは、TI 製品を使用する設計の経験を積んだ開発者への提供を意図したものです。(1) お客様のアプリケーションに適した TI 製品の選定、(2) お客様のアプリケーションの設計、検証、試験、(3) お客様のアプリケーションに該当する各種規格や、その他のあらゆる安全性、セキュリティ、規制、または他の要件への確実な適合に関する責任を、お客様のみが単独で負うものとします。

上記の各種リソースは、予告なく変更される可能性があります。これらのリソースは、リソースで説明されている TI 製品を使用するアプリケーションの開発の目的でのみ、TI はその使用をお客様に許諾します。これらのリソースに関して、他の目的で複製することや掲載することは禁止されています。TI や第三者の知的財産権のライセンスが付与されている訳ではありません。お客様は、これらのリソースを自身で使用した結果発生するあらゆる申し立て、損害、費用、損失、責任について、TI およびその代理人を完全に補償するものとし、TI は一切の責任を拒否します。

TI の製品は、 TI の販売条件 、 TI の総合的な品質ガイドライン 、 ti.com または TI 製品などに関連して提供される他の適用条件に従い提供されます。TI がこれらのリソースを提供することは、適用される TI の保証または他の保証の放棄の拡大や変更を意味するものではありません。 TI がカスタム、またはカスタマー仕様として明示的に指定していない限り、TI の製品は標準的なカタログに掲載される汎用機器です。

お客様がいかなる追加条項または代替条項を提案する場合も、TI はそれらに異議を唱え、拒否します。

Copyright © 2026, Texas Instruments Incorporated

最終更新日：2025 年 10 月