TEXAS INSTRUMENTS
MAX3221
JAJSMD8P – JUNE 1999 – REVISED JULY 2021

MAX3221 ±15kV ESD 保護機能搭載、3V～5.5V RS-232 ライン・ドライバ / レシーバ

1 特長

- 人体モデル (HBM) で ±15kV を超える RS-232 バス・ピン ESD 保護
- TIA/EIA-232-F および ITU V.28 規格の要件に適合
- 3V～5.5V の V_{CC} 電源で動作
- 最高 250kbps で動作
- 1 つのドライバと 1 つのレシーバ
- 小さいスタンバイ電流：1µA (標準値)
- 外付けコンデンサ：4 × 0.1µF
- 3.3V 電源で 5V ロジック入力を受容
- 代替の高速ピン互換デバイス (1Mbps)
  - SNx5C3221
- 自動パワー・ダウン機能により、ドライバを自動的にディスエーブルすることで電力を節約

2 アプリケーション

- 産業用 PC
- 有線ネットワーク
- データ・センターおよびエンタープライズ・コンピューティング
- バッテリ駆動システム
- PDA
- ノートブック PC
- ノート PC
- パームトップ PC
- ハンドヘルド機器

3 概要

MAX3221 デバイスは 1 つのライン・ドライバ、1 つのライン・レシーバ (専用イネーブル・ピン付き)、1 つのデュアル・チャージ・ポンプ回路で構成されており、±15kV のピン間 (シリアル・ポート接続ピン、GND を含む) ESD 保護機能を備えています。このデバイスは、TIA/EIA-232-F のスペックを満たし、非同期通信コントローラとシリアルポート・コネクタの間の電気的インターフェイスとして機能します。チャージ・ポンプと 4 つの小さな外付けコンデンサにより、3V～5.5V の単一電源で動作できます。これらのデバイスは最大 250kbps のデータ信号速度、最大 30V/µs のドライバ出力スルーレートで動作します。

シリアル・ポートが使われていない際のパワー・マネージメントを柔軟に制御できます。FORCEON が LOW かつ $\overline{\text{FORCEOFF}}$ が HIGH の場合、自動パワー・ダウン機能が動作します。この動作モード中、デバイスがレシーバ入力で有効な RS-232 信号を検出しない場合、ドライバ出力はディスエーブルになり、電源電流は 1µA に低減されます。
$\overline{\text{INVALID}}$ 出力は、レシーバの入力に RS-232 信号が存在するかどうかをユーザーに通知します。

製品情報

部品番号	パッケージ(1)	本体サイズ (公称)
MAX3221	SSOP (DB) (32)	6.20mm × 5.30mm
	TSSOP (PW) (32)	5.00mm × 4.40mm

(1) 利用可能なすべてのパッケージについては、このデータシートの末尾にある注文情報を参照してください。

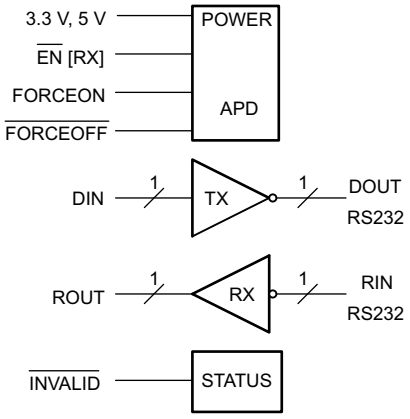

簡略ブロック図

英語版の TI 製品についての情報を翻訳したこの資料は、製品の概要を確認する目的で便宜的に提供しているものです。該当する正式な英語版の最新情報は、www.ti.com で閲覧でき、その内容が常に優先されます。TI では翻訳の正確性および妥当性につきましては一切保証いたしません。実際の設計などの前には、必ず最新版の英語版をご参照くださいますようお願いいたします。

Table of Contents

1 特長 1
2 アプリケーション 1
3 概要 1
4 Revision History 2
5 Pin Configuration and Functions 3
6 Specifications 4
6.1 Absolute Maximum Ratings 4
6.2 ESD Ratings 4
6.3 Recommended Operating Conditions 4
6.4 Thermal Information 5
6.5 Electrical Characteristics – Power 5
6.6 Electrical Characteristics – Driver 5
6.7 Electrical Characteristics – Receiver 6
6.8 Electrical Characteristics – Status 6
6.9 Switching Characteristics – Driver 6
6.10 Switching Characteristics – Receiver 7
6.11 Switching Characteristics – Status 7
6.12 Typical Characteristics 7
7 Parameter Measurement Information 8
8 Detailed Description 11
8.1 Overview 11
8.2 Functional Block Diagram 11
8.3 Feature Description 11
8.4 Device Functional Modes 12
9 Application and Implementation 13
9.1 Application Information 13
9.2 Typical Application 13
10 Power Supply Recommendations 14
11 Layout 15
11.1 Layout Guidelines 15
11.2 Layout Example 15
12 Device and Documentation Support 16
12.1 サポート・リソース 16
12.2 Trademarks 16
12.3 静電気放電に関する注意事項 16
12.4 用語集 16
13 Mechanical, Packaging, and Orderable Information 16

4 Revision History

資料番号末尾の英字は改訂を表しています。その改訂履歴は英語版に準じています。

Changes from Revision O (June 2015) to Revision P (July 2021) **Page**

- *「アプリケーション」*の一覧を変更 1
- Changed the values in the *Thermal Information* table for DB and PW packages 5

Changes from Revision N (January 2014) to Revision O (June 2015) **Page**

- *「ピン構成および機能」*セクション、*「ESD 定格」*表、*「機能説明」*セクション、*「デバイスの機能モード」*セクション、*「アプリケーションと実装」*セクション、*「電源に関する推奨事項」*セクション、*「レイアウト」*セクション、*「デバイスおよびドキュメントのサポート」*セクション、*「メカニカル、パッケージ、および注文情報」*セクションを追加 1

Changes from Revision M (March 2004) to Revision N (January 2013) **Page**

- 新しい TI データシート・フォーマットにドキュメントを更新 - 仕様変更なし 1
- *「注文情報」*表を削除 1

Copyright © 2021 Texas Instruments Incorporated

5 Pin Configuration and Functions

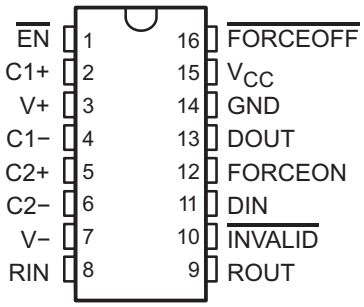

図 5-1. DB or PW Package, 16-Pin SSOP or TSSOP, Top View

表 5-1. Pin Functions

PIN		I/O	DESCRIPTION
NAME	NO.		
C1+	2	—	Positive terminals of the voltage-doubler charge-pump capacitors
C2+	5		
C1–	4	—	Negative terminals of the voltage-doubler charge-pump capacitors
C2–	6		
DIN	11	I	Driver input
DOUT	13	O	RS-232 driver output
$\overline{EN}$	1	I	Low input enables receiver ROUT output. High input sets ROUT to high impedance.
$\overline{FORCEOFF}$	16	I	Automatic power-down control input
FORCEON	12	I	Automatic power-down control input
GND	14	—	Ground
$\overline{INVALID}$	10	O	Invalid output pin. Output low when all RIN inputs are unpowered.
RIN	8	I	RS-232 receiver input
ROUT	9	O	Receiver output
V_{CC}	15	—	3-V to 5.5-V supply voltage
V+	3	O	5.5-V supply generated by the charge pump
V–	7	O	–5.5-V supply generated by the charge pump

Copyright © 2021 Texas Instruments Incorporated

6 Specifications

6.1 Absolute Maximum Ratings

over operating free-air temperature range (unless otherwise noted)(1)

			MIN	MAX	UNIT
	V_{CC} to GND		–0.3	6	V
	V+ to GND		–0.3	7	
	V– to GND		0.3	–7	
	V+ + |V–|(2)			13	
V_I	Input voltage	DIN, EN, FORCEOFF , and FORCEON to GND	–0.3	6	V
		RIN to GND		±25	
V_O	Output voltage	DOUT to GND		±13.2	V
		ROUT to GND	–0.3	V_{CC} + 0.3	
T_J	Junction temperature(3)			150	°C
T_{stg}	Storage temperature range		–65	150	

(1) Operation outside the *Absolute Maximum Ratings* may cause permanent device damage. *Absolute Maximum Ratings* do not imply functional operation of the device at these or any other conditions beyond those listed under *Recommended Operating Conditions*. If used outside the Recommended Operating Conditions but within the *Absolute Maximum Ratings*, the device may not be fully functional, and this may affect device reliability, functionality, performance, and shorten the device lifetime.
(2) V+ and V– can have maximum magnitudes of 7 V, but their absolute difference cannot exceed 13 V.
(3) Maximum power dissipation is a function of $T_J(max)$, $R_{\theta JA}$, and T_A. The maximum allowable power dissipation at any allowable ambient temperature is $P_D = (T_J(max) – T_A) / R_{\theta JA}$. Operating at the absolute maximum T_J of 150°C can affect reliability.

6.2 ESD Ratings

				VALUE	UNIT
$V_{(ESD)}$	Electrostatic discharge	Human body model (HBM), per ANSI/ESDA/JEDEC JS-001(1)	All pins except 8, 13	±3000	V
			Pins 8, 13	±15,000	
		Charged-device model (CDM), per JEDEC specification JESD22-C101(2)		±1500	

(1) JEDEC document JEP155 states that 500-V HBM allows safe manufacturing with a standard ESD control process.
(2) JEDEC document JEP157 states that 250-V CDM allows safe manufacturing with a standard ESD control process.

6.3 Recommended Operating Conditions

(see 図 9-1)(1)

				MIN	NOM	MAX	UNIT
	Supply voltage		V_{CC} = 3.3 V	3	3.3	3.6	V
			V_{CC} = 5 V	4.5	5	5.5	
V_{IH}	Driver high-level input voltage	DIN, FORCEOFF, FORCEON, EN	V_{CC} = 3.3 V	2			V
			V_{CC} = 5 V	2.4			
V_{IL}	Driver low-level input voltage	DIN, FORCEOFF, FORCEON, EN				0.8	V
V_I	Driver input voltage	DIN, FORCEOFF, FORCEON, EN		0		5.5	V
	Receiver input voltage			–25		25	
T_A	Operating free-air temperature		MAX3221C	0		70	°C
			MAX3221I	–40		85	

(1) Test conditions are C1–C4 = 0.1 µF at V_{CC} = 3.3 V ± 0.3 V; C1 = 0.047 µF, C2–C4 = 0.33 µF at V_{CC} = 5 V ± 0.5 V.

Copyright © 2021 Texas Instruments Incorporated

6.4 Thermal Information

THERMAL METRIC[1]		MAX3221 DB (SSOP) 16 PINS	MAX3221 PW (TSSOP) 16 PINS	UNIT
$R_{\theta JA}$	Junction-to-ambient thermal resistance	105.8	110.9	°C/W
$R_{\theta JC(top)}$	Junction-to-case (top) thermal resistance	51.9	41.7	°C/W
$R_{\theta JB}$	Junction-to-board thermal resistance	57.6	57.2	°C/W
ψ_{JT}	Junction-to-top characterization parameter	14.1	4.2	°C/W
ψ_{JB}	Junction-to-board characterization parameter	56.8	56.6	°C/W

(1) For more information about traditional and new thermal metrics, see the *Semiconductor and IC Package Thermal Metrics* application report, SPRA953.

6.5 Electrical Characteristics – Power

over recommended ranges of supply voltage and operating free-air temperature (unless otherwise noted)[2]

PARAMETER		TEST CONDITIONS			MIN	TYP[1]	MAX	UNIT
I_I	Input leakage current	$\overline{FORCEOFF}$, FORCEON, $\overline{EN}$				±0.01	±1	µA
I_{CC}	Supply current	Automatic power-down disabled	No load, V_{CC} = 3.3 V to 5 V	No load, $\overline{FORCEOFF}$ and FORCEON at V_{CC}		0.3	1	mA
		Powered off		No load, $\overline{FORCEOFF}$ at GND		1	10	µA
		Automatic power-down enabled		No load, $\overline{FORCEOFF}$ at V_{CC}, FORCEON at GND, All RIN are open or grounded		1	10	µA

(1) All typical values are at V_{CC} = 3.3 V or V_{CC} = 5 V, and T_A = 25°C.
(2) Test conditions are C1–C4 = 0.1 µF at V_{CC} = 3.3 V ± 0.3 V; C1 = 0.047 µF, C2–C4 = 0.33 µF at V_{CC} = 5 V ± 0.5 V.

6.6 Electrical Characteristics – Driver

over recommended ranges of supply voltage and operating free-air temperature (unless otherwise noted)[3]

PARAMETER		TEST CONDITIONS		MIN	TYP[1]	MAX	UNIT
V_{OH}	High-level output voltage	D_{OUT} at R_L = 3 kΩ to GND,	D_{IN} = GND	5	5.4		V
V_{OL}	Low-level output voltage	D_{OUT} at R_L = 3 kΩ to GND,	D_{IN} = V_{CC}	–5	–5.4		V
I_{IH}	High-level input current	V_I = V_{CC}			±0.01	±1	µA
I_{IL}	Low-level input current	V_I at GND			±0.01	±1	µA
I_{OS}	Short-circuit output current[2]	V_{CC} = 3.6 V	V_O = 0 V		±35	±60	mA
		V_{CC} = 5.5 V	V_O = 0 V		±35	±60	mA
r_O	Output resistance	V_{CC}, V+, and V– = 0 V	V_O = ±2 V	300	10M		Ω
I_{off}	Output leakage current	$\overline{FORCEOFF}$ = GND	V_O = ±12 V, V_{CC} = 3 V to 3.6 V			±25	µA
			V_O = ±12 V, V_{CC} = 4.5 V to 5.5 V			±25	µA

(1) All typical values are at V_{CC} = 3.3 V or V_{CC} = 5 V, and T_A = 25°C.
(2) Short-circuit durations should be controlled to prevent exceeding the device absolute power dissipation ratings, and not more than one output should be shorted at a time.
(3) Test conditions are C1–C4 = 0.1 µF at V_{CC} = 3.3 V ± 0.3 V; C1 = 0.047 µF, C2–C4 = 0.33 µF at V_{CC} = 5 V ± 0.5

Copyright © 2021 Texas Instruments Incorporated

6.7 Electrical Characteristics – Receiver

over recommended ranges of supply voltage and operating free-air temperature (unless otherwise noted)(2)

PARAMETER		TEST CONDITIONS	MIN	TYP(1)	MAX	UNIT
V_{OH}	High-level output voltage	I_{OH} = –1 mA	V_{CC} – 0.6	V_{CC} – 0.1		V
V_{OL}	Low-level output voltage	I_{OL} = 1.6 mA			0.4	V
V_{IT+}	Positive-going input threshold voltage	V_{CC} = 3.3 V		1.5	2.4	V
		V_{CC} = 5 V		1.8	2.4	
$V_{IT–}$	Negative-going input threshold voltage	V_{CC} = 3.3 V	0.6	1.1		V
		V_{CC} = 5 V	0.8	1.4		
V_{hys}	Input hysteresis ($V_{IT+} – V_{IT–}$)			0.5		V
I_{off}	Output leakage current	$\overline{FORCEOFF}$ = 0 V		±0.05	±10	µA
r_i	Input resistance	V_I = ±3 V to ±25 V	3	5	7	kΩ

(1) All typical values are at V_{CC} = 3.3 V or V_{CC} = 5 V, and T_A = 25°C.
(2) Test conditions are C1–C4 = 0.1 µF at V_{CC} = 3.3 V ± 0.3 V; C1 = 0.047 µF, C2–C4 = 0.33 µF at V_{CC} = 5 V ± 0.5 V.

6.8 Electrical Characteristics – Status

over recommended ranges of supply voltage and operating free-air temperature (unless otherwise noted)(2)

PARAMETER		TEST CONDITIONS	MIN	TYP(1)	MAX	UNIT
$V_{T+(valid)}$	Receiver input threshold for $\overline{INVALID}$ high-level output voltage	FORCEON = GND, $\overline{FORCEOFF}$ = V_{CC}			2.7	V
$V_{T–(valid)}$	Receiver input threshold for $\overline{INVALID}$ high-level output voltage	FORCEON = GND, $\overline{FORCEOFF}$ = V_{CC}	–2.7			V
$V_{T(invalid)}$	Receiver input threshold for $\overline{INVALID}$ low-level output voltage	FORCEON = GND, $\overline{FORCEOFF}$ = V_{CC}	–0.3		0.3	V
V_{OH}	$\overline{INVALID}$ high-level output voltage	I_{OH} = –1 mA, FORCEON = GND, $\overline{FORCEOFF}$ = V_{CC}	V_{CC} – 0.6			V
V_{OL}	$\overline{INVALID}$ low-level output voltage	I_{OH} = –1 mA, FORCEON = GND, $\overline{FORCEOFF}$ = V_{CC}			0.4	V

(1) All typical values are at V_{CC} = 3.3 V or V_{CC} = 5 V, and T_A = 25°C.
(2) Test conditions are C1–C4 = 0.1 µF at V_{CC} = 3.3 V ± 0.3 V; C1 = 0.047 µF, C2–C4 = 0.33 µF at V_{CC} = 5 V ± 0.5 V.

6.9 Switching Characteristics – Driver

over recommended ranges of supply voltage and operating free-air temperature (unless otherwise noted)(3)

PARAMETER		TEST CONDITIONS		MIN	TYP(1)	MAX	UNIT
	Maximum data rate	C_L = 1000 pF, R_L = 3 kΩ, see 図 7-1		150	250		kbps
$t_{sk(p)}$	Pulse skew(2)	C_L = 150 to 2500 pF, R_L = 3 kΩ to 7 kΩ, see 図 7-2			100		ns
SR(tr)	Slew rate, transition region (see 図 7-1)	V_{CC} = 3.3 V, R_L = 3 kΩ to 7 kΩ	C_L = 150 to 1000 pF	6		30	V/µs
			C_L = 150 to 2500 pF	4		30	

(1) All typical values are at V_{CC} = 3.3 V or V_{CC} = 5 V, and T_A = 25°C.
(2) Pulse skew is defined as $|t_{PLH} – t_{PHL}|$ of each channel of the same device.
(3) Test conditions are C1–C4 = 0.1 µF at V_{CC} = 3.3 V ± 0.3 V; C1 = 0.047 µF, C2–C4 = 0.33 µF at V_{CC} = 5 V ± 0.5 V.

Copyright © 2021 Texas Instruments Incorporated

6.10 Switching Characteristics – Receiver

over recommended ranges of supply voltage and operating free-air temperature (unless otherwise noted)(3)

PARAMETER		TEST CONDITIONS	MIN	TYP(1)	MAX	UNIT
t_{PLH}	Propagation delay time, low- to high-level output	C_L = 150 pF, see 図 7-3		150		ns
t_{PHL}	Propagation delay time, high- to low-level output	C_L = 150 pF, see 図 7-3		150		ns
t_{en}	Output enable time	C_L = 150 pF, R_L = 3 kΩ, see 図 7-4		200		ns
t_{dis}	Output disable time	C_L = 150 pF, R_L = 3 kΩ, see 図 7-4		200		ns
$t_{sk(p)}$	Pulse skew(2)	See 図 7-3		50		ns

(1) All typical values are at V_{CC} = 3.3 V or V_{CC} = 5 V, and T_A = 25°C.
(2) Pulse skew is defined as $|t_{PLH} - t_{PHL}|$ of each channel of the same device.
(3) Test conditions are C1–C4 = 0.1 µF at V_{CC} = 3.3 V ± 0.3 V; C1 = 0.047 µF, C2–C4 = 0.33 µF at V_{CC} = 5 V ± 0.5 V.

6.11 Switching Characteristics – Status

over recommended ranges of supply voltage and operating free-air temperature (unless otherwise noted)(2)

PARAMETER		MIN	TYP(1)	MAX	UNIT
t_{valid}	Propagation delay time, low- to high-level output		1		µs
$t_{invalid}$	Propagation delay time, high- to low-level output		30		µs
t_{en}	Supply enable time		100		µs

(1) All typical values are at V_{CC} = 3.3 V or V_{CC} = 5 V, and T_A = 25°C.
(2) Test conditions are C1–C4 = 0.1 µF at V_{CC} = 3.3 V ± 0.3 V; C1 = 0.047 µF, C2–C4 = 0.33 µF at V_{CC} = 5 V ± 0.5 V.

6.12 Typical Characteristics

V_{CC} = 3.3 V

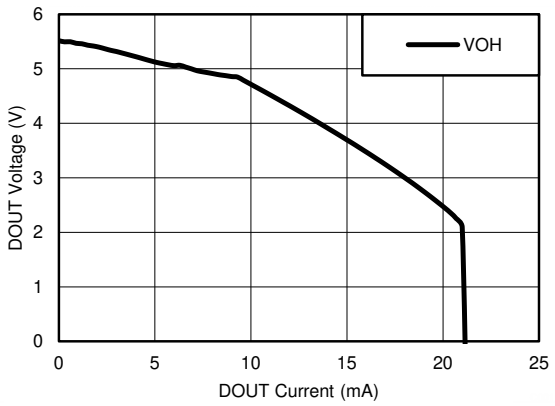

図 6-1. DOUT V_{OH} vs Load Current

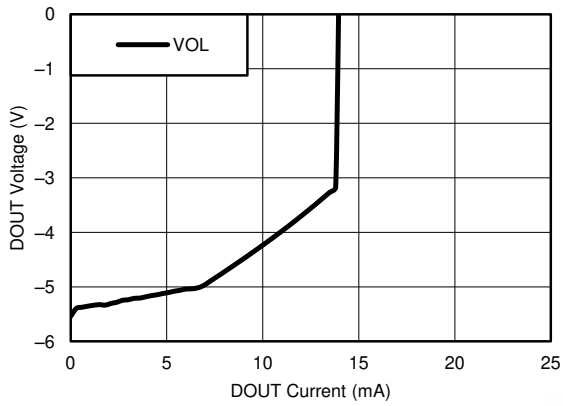

図 6-2. DOUT V_{OL} vs Load Current

7 Parameter Measurement Information

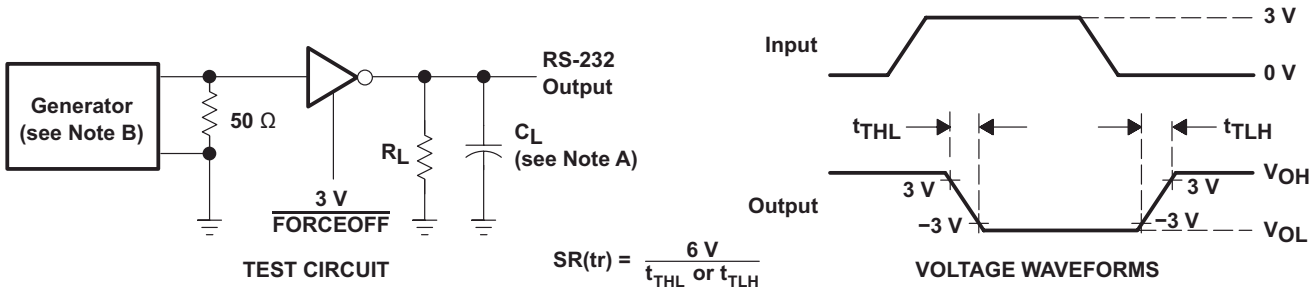

A. C_L includes probe and jig capacitance.

B. The pulse generator has the following characteristics: PRR = 250 kbps, Z_O = 50 Ω, 50% duty cycle, t_r ≤ 10 ns, t_f ≤ 10 ns.

図 7-1. Driver Slew Rate

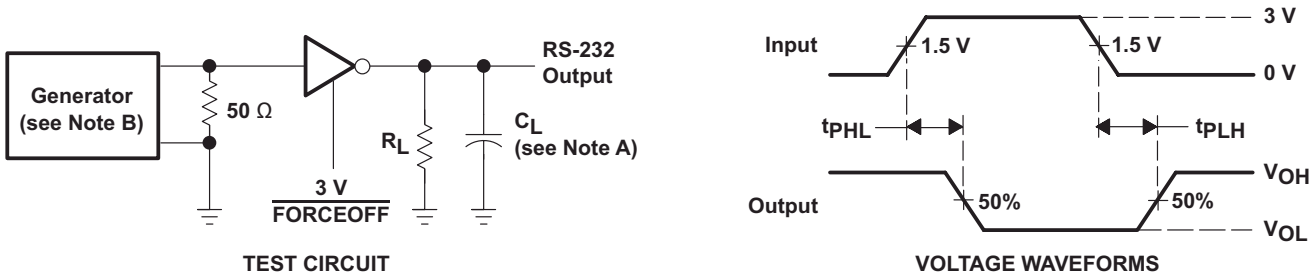

A. C_L includes probe and jig capacitance.

B. The pulse generator has the following characteristics: PRR = 250 kbps, Z_O = 50 Ω, 50% duty cycle, t_r ≤ 10 ns, t_f ≤ 10 ns.

図 7-2. Driver Pulse Skew

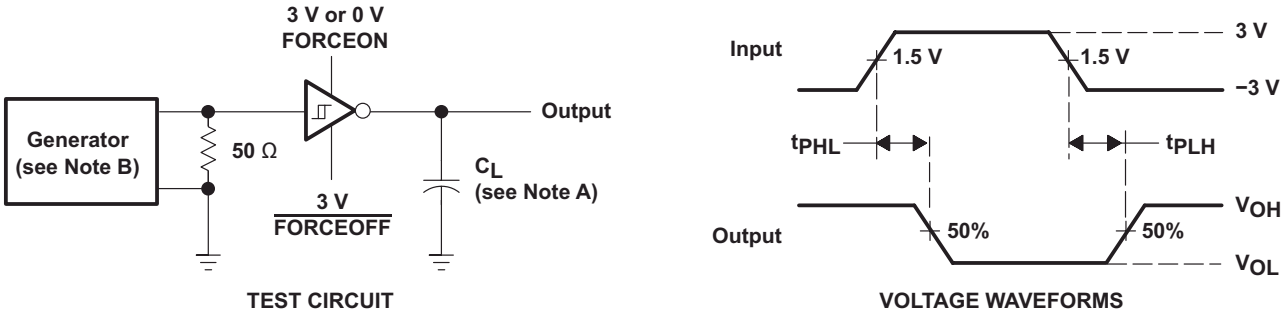

A. C_L includes probe and jig capacitance.

B. The pulse generator has the following characteristics: Z_O = 50 Ω, 50% duty cycle, t_r ≤ 10 ns, t_f ≤ 10 ns.

図 7-3. Receiver Propagation Delay Times

Copyright © 2021 Texas Instruments Incorporated

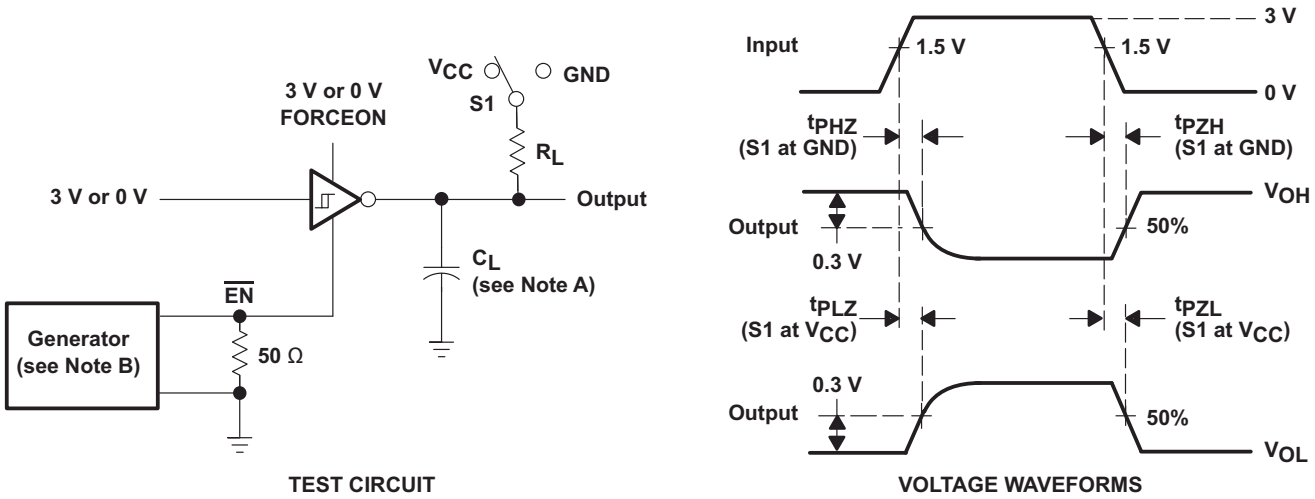

A. C_L includes probe and jig capacitance.
B. The pulse generator has the following characteristics: Z_O = 50 Ω, 50% duty cycle, t_r ≤ 10 ns, t_f ≤ 10 ns.
C. t_{PLZ} and t_{PHZ} are the same as t_{dis}.
D. t_{PZL} and t_{PZH} are the same as t_{en}.

図 7-4. Receiver Enable and Disable Times

Copyright © 2021 Texas Instruments Incorporated

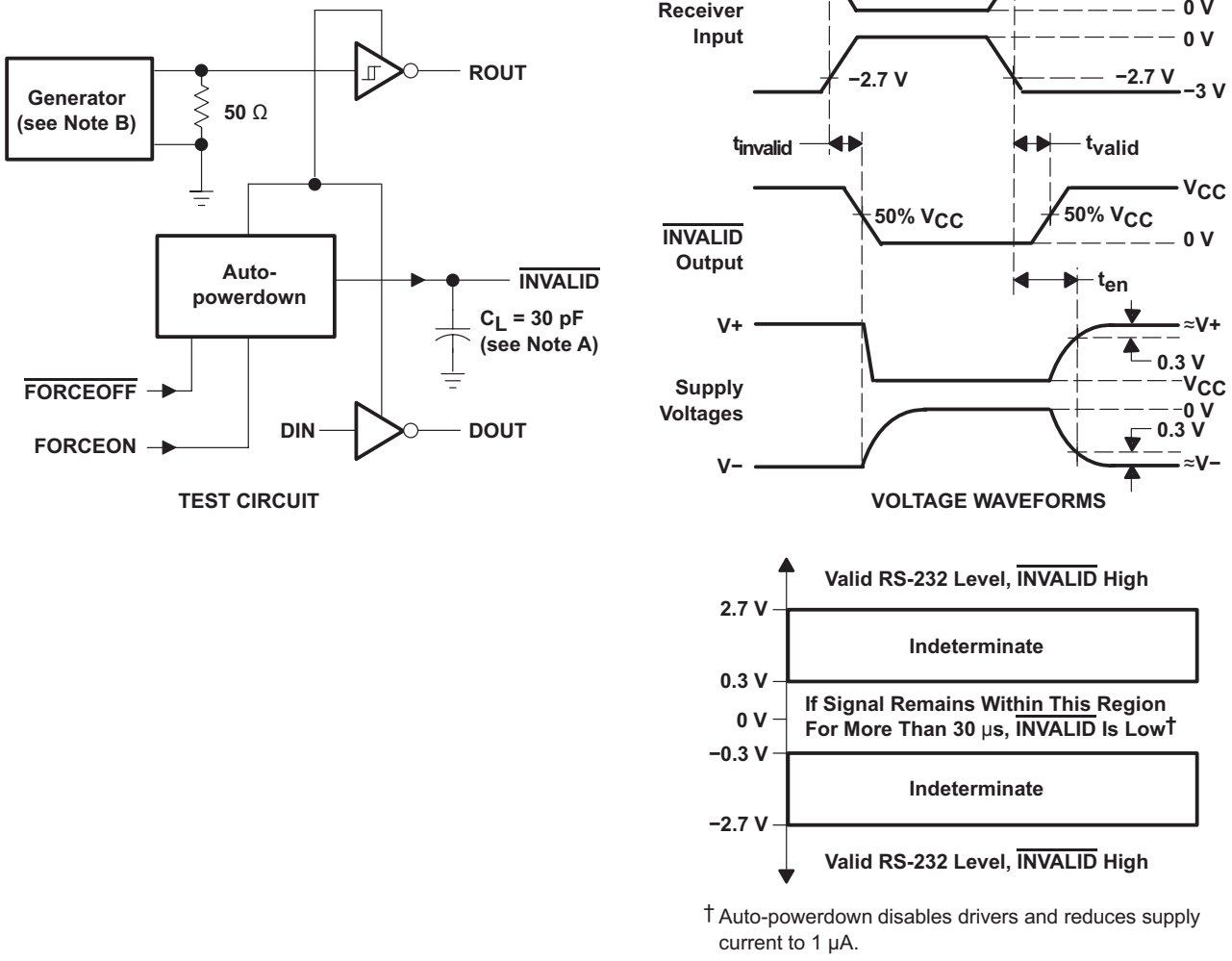

† Auto-powerdown disables drivers and reduces supply current to 1 µA.

図 7-5. $\overline{\text{INVALID}}$ Propagation Delay Times and Driver Enabling Time

Copyright © 2021 Texas Instruments Incorporated

8 Detailed Description

8.1 Overview

The MAX3221 device is a one-driver and one-receiver RS-232 interface device. All RS-232 inputs and outputs are protected to ±15 kV using the Human Body Model. The charge pump requires only four small 0.1-µF capacitors for operation from a 3.3-V supply. The MAX3221 is capable of running at data rates up to 250 kbps, while maintaining RS-232-compliant output levels.

Automatic power-down can be disabled when FORCEON and $\overline{\text{FORCEOFF}}$ are high. With automatic power-down plus enabled, the device activates automatically when a valid signal is applied to any receiver input. The device can automatically power down the driver to save power when the RIN input is unpowered.

$\overline{\text{INVALID}}$ is high (valid data) if receiver input voltage is greater than 2.7 V or less than –2.7 V, or has been between –0.3 V and 0.3 V for less than 30 µs. $\overline{\text{INVALID}}$ is low (invalid data) if receiver input voltages are between –0.3 V and 0.3 V for more than 30 µs. Refer to 図 7-5 for receiver input levels.

8.2 Functional Block Diagram

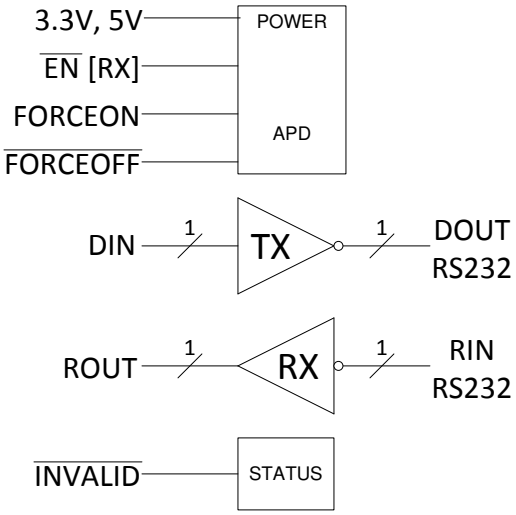

8.3 Feature Description

8.3.1 Power

The power block increases, inverts, and regulates voltage at V+ and V- pins using a charge pump that requires four external capacitors. Auto-power-down feature for driver is controlled by FORCEON and $\overline{\text{FORCEOFF}}$ inputs. Receiver is controlled by $\overline{\text{EN}}$ input. See 表 8-1 and 表 8-2

When MAX3221 is unpowered, it can be safely connected to an active remote RS232 device.

8.3.2 RS232 Driver

One driver interfaces standard logic level to RS232 levels. DIN input must be valid high or low.

8.3.3 RS232 Receiver

One receiver interfaces RS232 levels to standard logic levels. An open input will result in a high output on ROUT. RIN input includes an internal standard RS232 load. A logic high input on the $\overline{\text{EN}}$ pin will shutdown the receiver output.

8.3.4 RS232 Status

The $\overline{\text{INVALID}}$ output goes low when RIN input is unpowered for more than 30 µs. The $\overline{\text{INVALID}}$ output goes high when receiver has a valid input. The $\overline{\text{INVALID}}$ output is active when V_{cc} is powered irregardless of FORCEON and $\overline{\text{FORCEOFF}}$ inputs (see 表 8-3).

Copyright © 2021 Texas Instruments Incorporated

8.4 Device Functional Modes

表 8-1, 表 8-2, and 表 8-3 show the behavior of the driver, receiver, and INVALID(activelow) features under all possible relevant combinations of inputs.

表 8-1. Driver(1)

INPUTS				OUTPUT	DRIVER STATUS
DIN	FORCEON	$\overline{\text{FORCEOFF}}$	VALID RIN RS-232 LEVEL	DOUT	
X	X	L	X	Z	Powered off
L	H	H	X	H	Normal operation with automatic power down disabled
H	H	H	X	L	
L	L	H	Yes	H	Normal operation with automatic power down enabled
H	L	H	Yes	L	
L	L	H	No	Z	Powered off by automatic power down feature
H	L	H	No	Z	

(1) H = high level, L = low level, X = irrelevant, Z = high impedance, Yes = |RIN| > 2.7 V, No = |RIN| <0.3 V

表 8-2. Receiver(1)

INPUTS			OUTPUT	RECEIVER STATUS
RIN	$\overline{\text{EN}}$	VALID RIN RS-232 LEVEL	ROUT	
X	H	X	Z	Output off
L	L	X	H	Normal operation
H	L	X	L	
Open	L	No	H	

(1) H = high level, L = low level, X = irrelevant, Z = high impedance (off), Open = input disconnected or connected driver off

表 8-3. $\overline{\text{INVALID}}$ (1)

INPUTS				OUTPUT
RIN	FORCEON	$\overline{\text{FORCEOFF}}$	$\overline{\text{EN}}$	$\overline{\text{INVALID}}$
L	X	X	X	H
H	X	X	X	H
Open	X	X	X	L

(1) H = high level, L = low level, X = irrelevant, Z = high impedance (off), Open = input disconnected or connected driver off

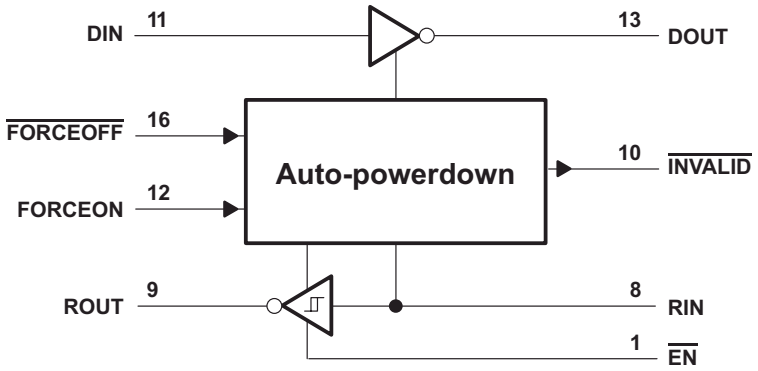

図 8-1. Logic Diagram

Copyright © 2021 Texas Instruments Incorporated

9 Application and Implementation

Note

Information in the following applications sections is not part of the TI component specification, and TI does not warrant its accuracy or completeness. TI's customers are responsible for determining suitability of components for their purposes, as well as validating and testing their design implementation to confirm system functionality.

9.1 Application Information

The MAX3221 line driver and receiver is a specialized device for 3-V to 5.5-V RS-232 communication applications. This application is a generic implementation of this device with all required external components. For proper operation, add capacitors as shown in 図 9-1.

9.2 Typical Application

ROUT and DIN connect to UART or general purpose logic lines. FORCEON and $\overline{\text{FORCEOFF}}$ may be connected general purpose logic lines or tied to ground or V_{CC}. $\overline{\text{INVALID}}$ may be connected to a general purpose logic line or left unconnected. RIN and DOUT lines connect to a RS232 connector or cable. DIN, FORCEON, and $\overline{\text{FORCEOFF}}$ inputs must not be left unconnected.

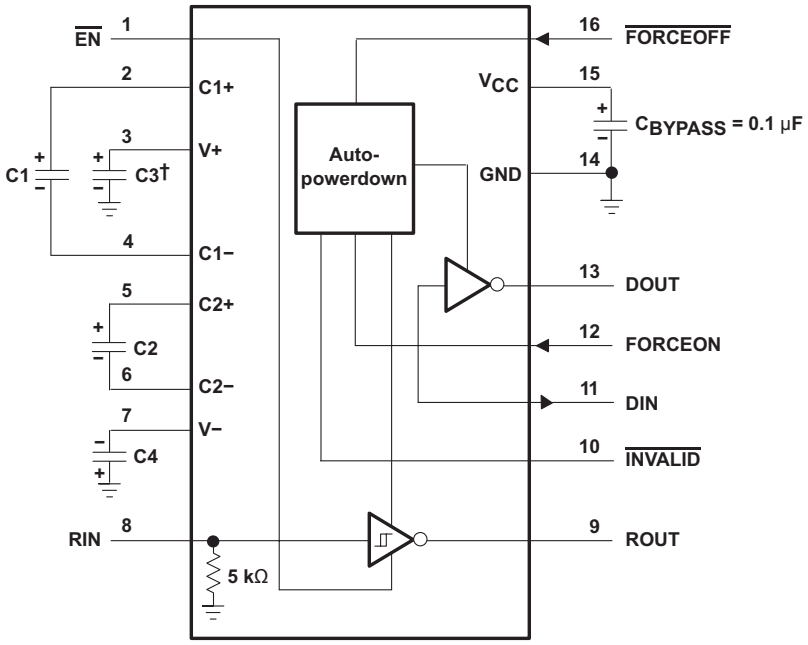

† C3 can be connected to V_{CC} or GND.

NOTES: A. Resistor values shown are nominal.

B. Nonpolarized ceramic capacitors are acceptable. If polarized tantalum or electrolytic capacitors are used, they should be connected as shown.

V_{CC} vs CAPACITOR VALUES

V_{CC}	C1	C2, C3, and C4
3.3 V ± 0.3 V	0.1 µF	0.1 µF
5 V ± 0.5 V	0.047 µF	0.33 µF
3 V to 5.5 V	0.1 µF	0.47 µF

図 9-1. Typical Operating Circuit and Capacitor Values

Copyright © 2021 Texas Instruments Incorporated

9.2.1 Design Requirements

- Recommended V_{CC} is 3.3 V or 5 V.
  - 3 V to 5.5 V is also possible
- Maximum recommended bit rate is 250 kbps.
- Use capacitors as shown in 図 9-1.

9.2.2 Detailed Design Procedure

- DIN, $\overline{\text{FORCEOFF}}$ and FORCEON inputs must be connected to valid low or high logic levels.
- Select capacitor values based on VCC level for best performance.

9.2.3 Application Curve

Curves for V_{CC} of 3.3 V and 250 kbps alternative bit data stream.

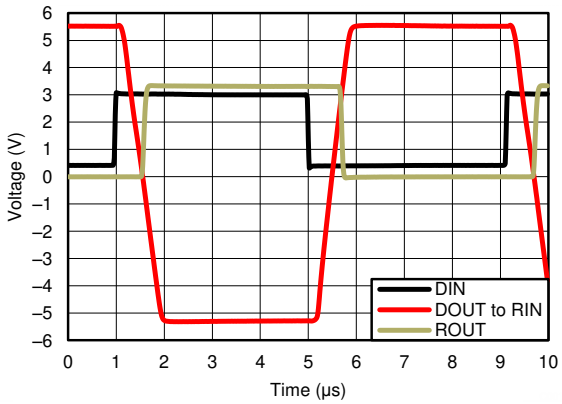

図 9-2. 250-kbps Driver to Receiver Loopback Timing Waveform, V_{CC} = 3.3 V

10 Power Supply Recommendations

TI recommends a 0.1-µF capacitor to filter noise on the power supply pin. For additional filter capability, a 0.01-µF capacitor may be added in parallel as well. Power supply input voltage is recommended to be any valid level in *Recommended Operating Conditions*.

Copyright © 2021 Texas Instruments Incorporated

11 Layout

11.1 Layout Guidelines

Keep the external capacitor traces short. This is more important on C1 and C2 nodes that have the fastest rise and fall times.

11.2 Layout Example

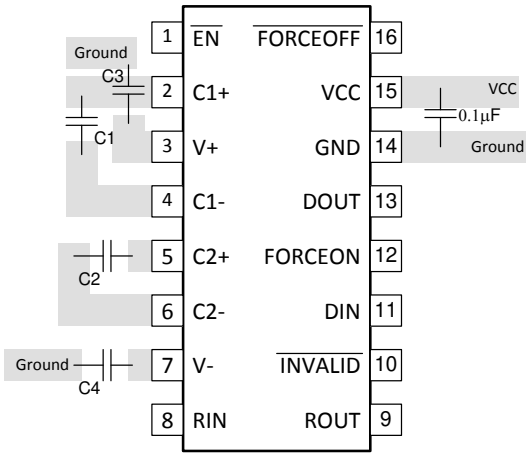

図 11-1. Layout Diagram

12 Device and Documentation Support

12.1 サポート・リソース

TI E2E™ サポート・フォーラムは、エンジニアが検証済みの回答と設計に関するヒントをエキスパートから迅速かつ直接得ることができる場所です。既存の回答を検索したり、独自の質問をしたりすることで、設計で必要な支援を迅速に得ることができます。

リンクされているコンテンツは、該当する貢献者により、現状のまま提供されるものです。これらは TI の仕様を構成するものではなく、必ずしも TI の見解を反映したものではありません。TI の使用条件を参照してください。

12.2 Trademarks

TI E2E™ is a trademark of Texas Instruments.
すべての商標は、それぞれの所有者に帰属します。

12.3 静電気放電に関する注意事項



この IC は、ESD によって破損する可能性があります。テキサス・インスツルメンツは、IC を取り扱う際には常に適切な注意を払うことを推奨します。正しい ESD 対策をとらないと、デバイスを破損するおそれがあります。

ESD による破損は、わずかな性能低下からデバイスの完全な故障まで多岐にわたります。精密な IC の場合、パラメータがわずかに変化するだけで公表されている仕様から外れる可能性があるため、破損が発生しやすくなっています。

12.4 用語集

TI 用語集　この用語集には、用語や略語の一覧および定義が記載されています。

13 Mechanical, Packaging, and Orderable Information

The following pages include mechanical packaging and orderable information. This information is the most current data available for the designated devices. This data is subject to change without notice and revision of this document. For browser based versions of this data sheet, refer to the left hand navigation.

Copyright © 2021 Texas Instruments Incorporated

PACKAGING INFORMATION

Orderable part number	Status (1)	Material type (2)	Package | Pins	Package qty | Carrier	RoHS (3)	Lead finish/ Ball material (4)	MSL rating/ Peak reflow (5)	Op temp (°C)	Part marking (6)
MAX3221CDBR	Active	Production	SSOP (DB) | 16	2000 | LARGE T&R	Yes	NIPDAU	Level-1-260C-UNLIM	0 to 70	MA3221C
MAX3221CDBR.A	Active	Production	SSOP (DB) | 16	2000 | LARGE T&R	Yes	NIPDAU	Level-1-260C-UNLIM	0 to 70	MA3221C
MAX3221CDBRG4	Active	Production	SSOP (DB) | 16	2000 | LARGE T&R	Yes	NIPDAU	Level-1-260C-UNLIM	0 to 70	MA3221C
MAX3221CPWR	Active	Production	TSSOP (PW) | 16	2000 | LARGE T&R	Yes	NIPDAU	Level-1-260C-UNLIM	0 to 70	MA3221C
MAX3221CPWR.A	Active	Production	TSSOP (PW) | 16	2000 | LARGE T&R	Yes	NIPDAU	Level-1-260C-UNLIM	0 to 70	MA3221C
MAX3221CPWRE4	Active	Production	TSSOP (PW) | 16	2000 | LARGE T&R	Yes	NIPDAU	Level-1-260C-UNLIM	0 to 70	MA3221C
MAX3221CPWRG4	Active	Production	TSSOP (PW) | 16	2000 | LARGE T&R	Yes	NIPDAU	Level-1-260C-UNLIM	0 to 70	MA3221C
MAX3221IDBR	Active	Production	SSOP (DB) | 16	2000 | LARGE T&R	Yes	NIPDAU	Level-1-260C-UNLIM	-40 to 85	MB3221I
MAX3221IDBR.A	Active	Production	SSOP (DB) | 16	2000 | LARGE T&R	Yes	NIPDAU	Level-1-260C-UNLIM	-40 to 85	MB3221I
MAX3221IDBRE4	Active	Production	SSOP (DB) | 16	2000 | LARGE T&R	Yes	NIPDAU	Level-1-260C-UNLIM	-40 to 85	MB3221I
MAX3221IDBRG4	Active	Production	SSOP (DB) | 16	2000 | LARGE T&R	Yes	NIPDAU	Level-1-260C-UNLIM	-40 to 85	MB3221I
MAX3221IPWR	Active	Production	TSSOP (PW) | 16	2000 | LARGE T&R	Yes	NIPDAU | SN	Level-1-260C-UNLIM	-40 to 85	MB3221I
MAX3221IPWR.A	Active	Production	TSSOP (PW) | 16	2000 | LARGE T&R	Yes	NIPDAU	Level-1-260C-UNLIM	-40 to 85	MB3221I
MAX3221IPWRG4	Active	Production	TSSOP (PW) | 16	2000 | LARGE T&R	Yes	NIPDAU	Level-1-260C-UNLIM	-40 to 85	MB3221I
MAX3221IPWRG4.A	Active	Production	TSSOP (PW) | 16	2000 | LARGE T&R	Yes	NIPDAU	Level-1-260C-UNLIM	-40 to 85	MB3221I

(1) **Status:** For more details on status, see our product life cycle.

(2) **Material type:** When designated, preproduction parts are prototypes/experimental devices, and are not yet approved or released for full production. Testing and final process, including without limitation quality assurance, reliability performance testing, and/or process qualification, may not yet be complete, and this item is subject to further changes or possible discontinuation. If available for ordering, purchases will be subject to an additional waiver at checkout, and are intended for early internal evaluation purposes only. These items are sold without warranties of any kind.

(3) **RoHS values:** Yes, No, RoHS Exempt. See the TI RoHS Statement for additional information and value definition.

(4) **Lead finish/Ball material:** Parts may have multiple material finish options. Finish options are separated by a vertical ruled line. Lead finish/Ball material values may wrap to two lines if the finish value exceeds the maximum column width.

(5) **MSL rating/Peak reflow:** The moisture sensitivity level ratings and peak solder (reflow) temperatures. In the event that a part has multiple moisture sensitivity ratings, only the lowest level per JEDEC standards is shown. Refer to the shipping label for the actual reflow temperature that will be used to mount the part to the printed circuit board.

(6) **Part marking:** There may be an additional marking, which relates to the logo, the lot trace code information, or the environmental category of the part.

Multiple part markings will be inside parentheses. Only one part marking contained in parentheses and separated by a "~" will appear on a part. If a line is indented then it is a continuation of the previous line and the two combined represent the entire part marking for that device.

Important Information and Disclaimer: The information provided on this page represents TI's knowledge and belief as of the date that it is provided. TI bases its knowledge and belief on information provided by third parties, and makes no representation or warranty as to the accuracy of such information. Efforts are underway to better integrate information from third parties. TI has taken and continues to take reasonable steps to provide representative and accurate information but may not have conducted destructive testing or chemical analysis on incoming materials and chemicals. TI and TI suppliers consider certain information to be proprietary, and thus CAS numbers and other limited information may not be available for release.

In no event shall TI's liability arising out of such information exceed the total purchase price of the TI part(s) at issue in this document sold by TI to Customer on an annual basis.

OTHER QUALIFIED VERSIONS OF MAX3221 :

- Enhanced Product : MAX3221-EP

NOTE: Qualified Version Definitions:

- Enhanced Product - Supports Defense, Aerospace and Medical Applications

TAPE AND REEL INFORMATION

REEL DIMENSIONS

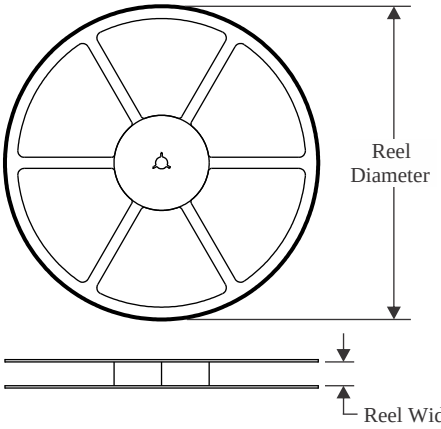

TAPE DIMENSIONS

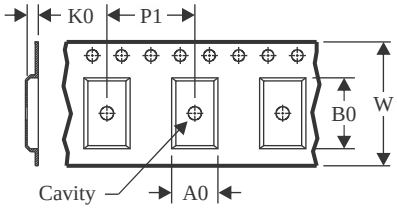

A0	Dimension designed to accommodate the component width
B0	Dimension designed to accommodate the component length
K0	Dimension designed to accommodate the component thickness
W	Overall width of the carrier tape
P1	Pitch between successive cavity centers

QUADRANT ASSIGNMENTS FOR PIN 1 ORIENTATION IN TAPE

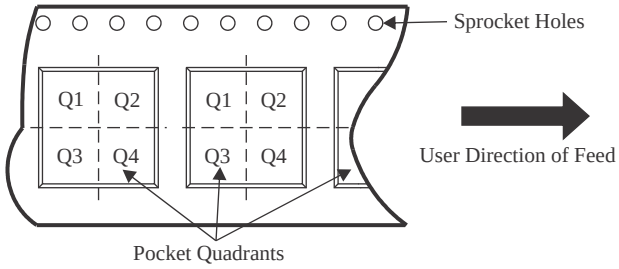

*All dimensions are nominal

Device	Package Type	Package Drawing	Pins	SPQ	Reel Diameter (mm)	Reel Width W1 (mm)	A0 (mm)	B0 (mm)	K0 (mm)	P1 (mm)	W (mm)	Pin1 Quadrant
MAX3221CDBR	SSOP	DB	16	2000	330.0	16.4	8.35	6.6	2.4	12.0	16.0	Q1
MAX3221CPWR	TSSOP	PW	16	2000	330.0	12.4	6.9	5.6	1.6	8.0	12.0	Q1
MAX3221IDBR	SSOP	DB	16	2000	330.0	16.4	8.35	6.6	2.4	12.0	16.0	Q1
MAX3221IPWR	TSSOP	PW	16	2000	330.0	12.4	6.9	5.3	1.6	8.0	12.0	Q1
MAX3221IPWR	TSSOP	PW	16	2000	330.0	12.4	6.9	5.6	1.6	8.0	12.0	Q1
MAX3221IPWR	TSSOP	PW	16	2000	330.0	12.4	6.9	5.6	1.6	8.0	12.0	Q1
MAX3221IPWRG4	TSSOP	PW	16	2000	330.0	12.4	6.9	5.3	1.6	8.0	12.0	Q1
MAX3221IPWRG4	TSSOP	PW	16	2000	330.0	12.4	6.9	5.6	1.6	8.0	12.0	Q1

TAPE AND REEL BOX DIMENSIONS

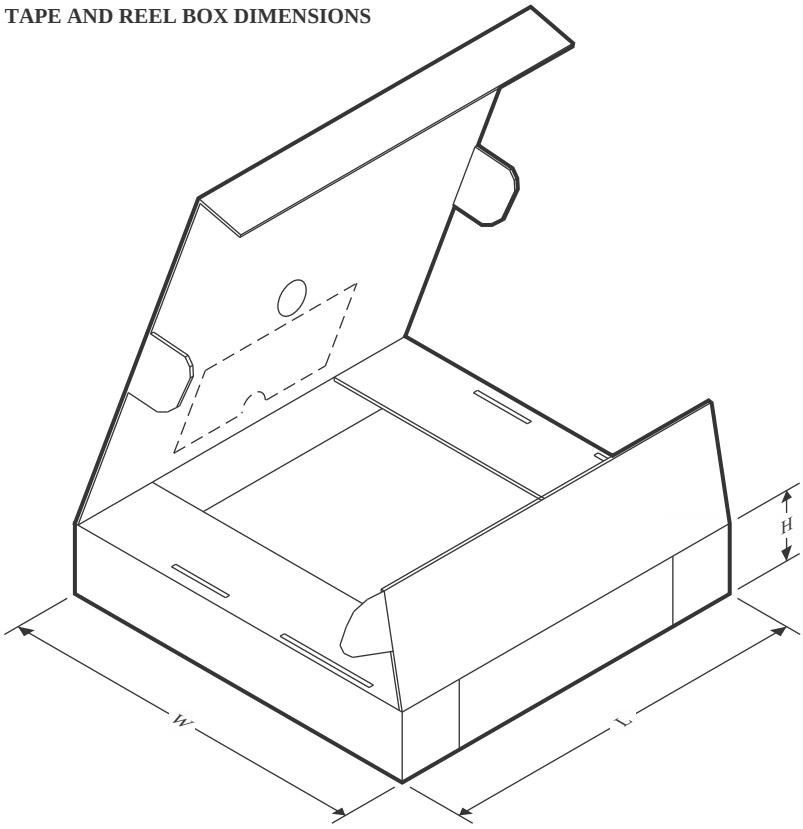

*All dimensions are nominal

Device	Package Type	Package Drawing	Pins	SPQ	Length (mm)	Width (mm)	Height (mm)
MAX3221CDBR	SSOP	DB	16	2000	353.0	353.0	32.0
MAX3221CPWR	TSSOP	PW	16	2000	353.0	353.0	32.0
MAX3221IDBR	SSOP	DB	16	2000	353.0	353.0	32.0
MAX3221IPWR	TSSOP	PW	16	2000	367.0	367.0	35.0
MAX3221IPWR	TSSOP	PW	16	2000	353.0	353.0	32.0
MAX3221IPWR	TSSOP	PW	16	2000	356.0	356.0	35.0
MAX3221IPWRG4	TSSOP	PW	16	2000	367.0	367.0	35.0
MAX3221IPWRG4	TSSOP	PW	16	2000	353.0	353.0	32.0

PACKAGE OUTLINE

PW0016A

TSSOP - 1.2 mm max height

SMALL OUTLINE PACKAGE

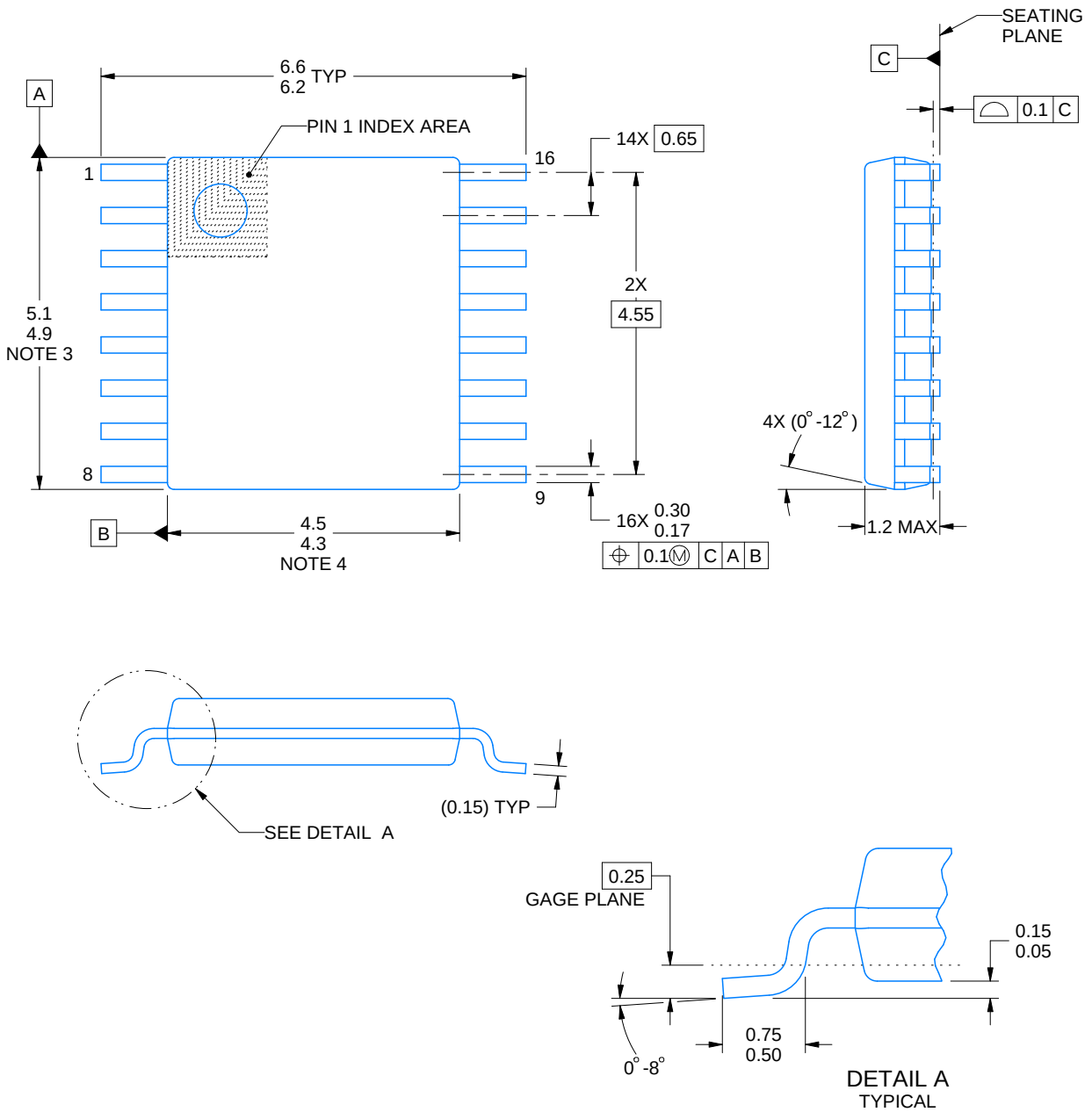

NOTES:

1. All linear dimensions are in millimeters. Any dimensions in parenthesis are for reference only. Dimensioning and tolerancing per ASME Y14.5M.
2. This drawing is subject to change without notice.
3. This dimension does not include mold flash, protrusions, or gate burrs. Mold flash, protrusions, or gate burrs shall not exceed 0.15 mm per side.
4. This dimension does not include interlead flash. Interlead flash shall not exceed 0.25 mm per side.
5. Reference JEDEC registration MO-153.

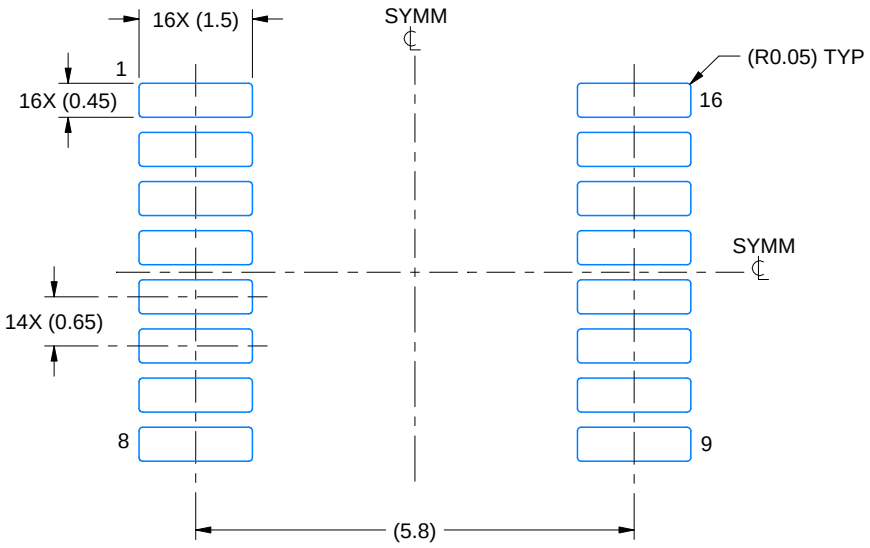

LAND PATTERN EXAMPLE
EXPOSED METAL SHOWN
SCALE: 10X



SOLDER MASK DETAILS

4220204/B 12/2023

NOTES: (continued)

6. Publication IPC-7351 may have alternate designs.
7. Solder mask tolerances between and around signal pads can vary based on board fabrication site.

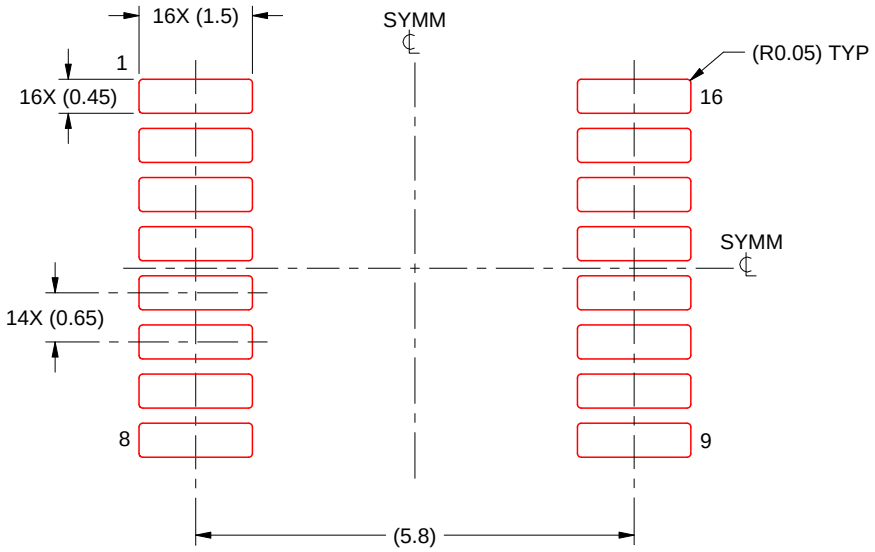

SOLDER PASTE EXAMPLE
BASED ON 0.125 mm THICK STENCIL
SCALE: 10X

4220204/B 12/2023

NOTES: (continued)

8. Laser cutting apertures with trapezoidal walls and rounded corners may offer better paste release. IPC-7525 may have alternate design recommendations.
9. Board assembly site may have different recommendations for stencil design.

PACKAGE OUTLINE

DB0016A

SSOP - 2 mm max height

SMALL OUTLINE PACKAGE

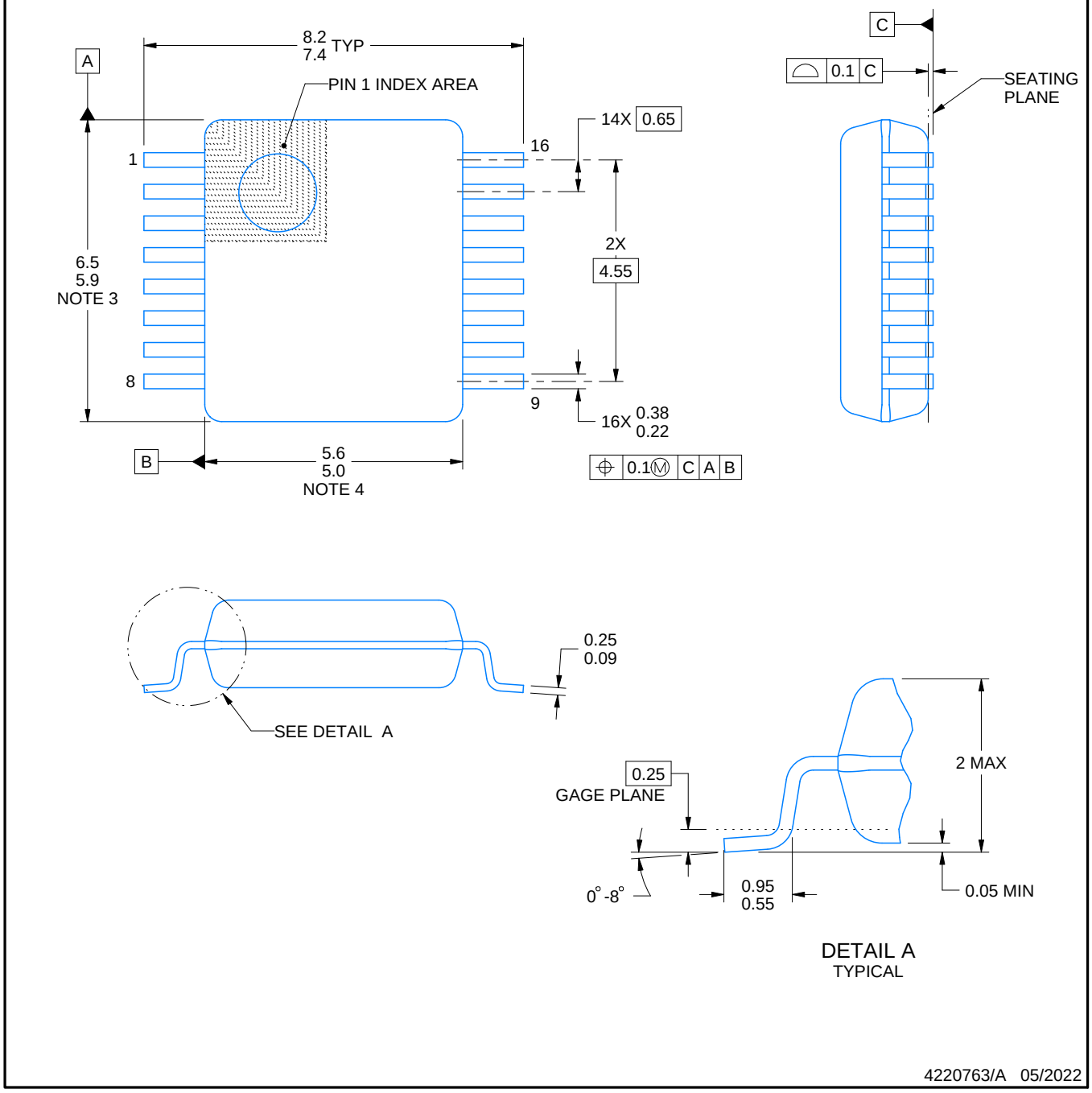

NOTES:

1. All linear dimensions are in millimeters. Any dimensions in parenthesis are for reference only. Dimensioning and tolerancing per ASME Y14.5M.
2. This drawing is subject to change without notice.
3. This dimension does not include mold flash, protrusions, or gate burrs. Mold flash, protrusions, or gate burrs shall not exceed 0.15 mm per side.
4. Reference JEDEC registration MO-150.

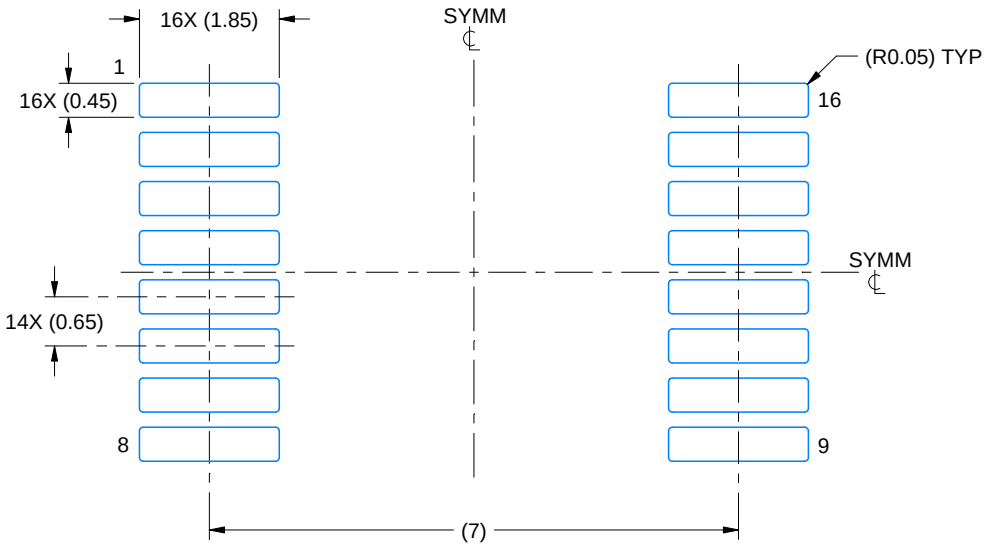

LAND PATTERN EXAMPLE
EXPOSED METAL SHOWN
SCALE: 10X

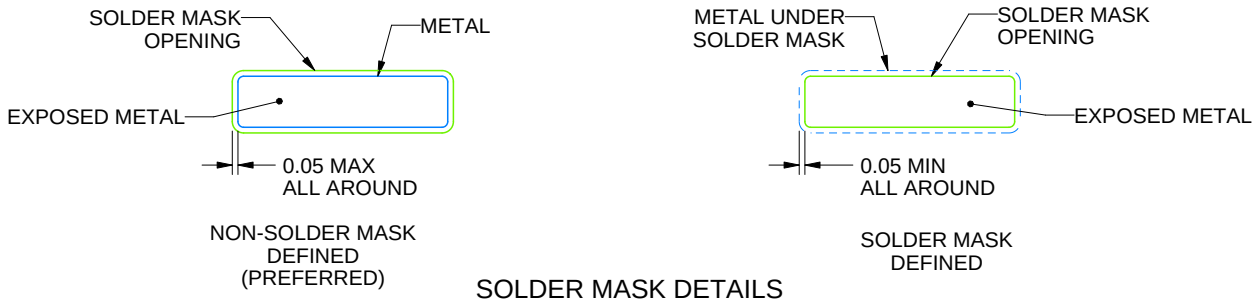

SOLDER MASK DETAILS

4220763/A 05/2022

NOTES: (continued)

5. Publication IPC-7351 may have alternate designs.
6. Solder mask tolerances between and around signal pads can vary based on board fabrication site.

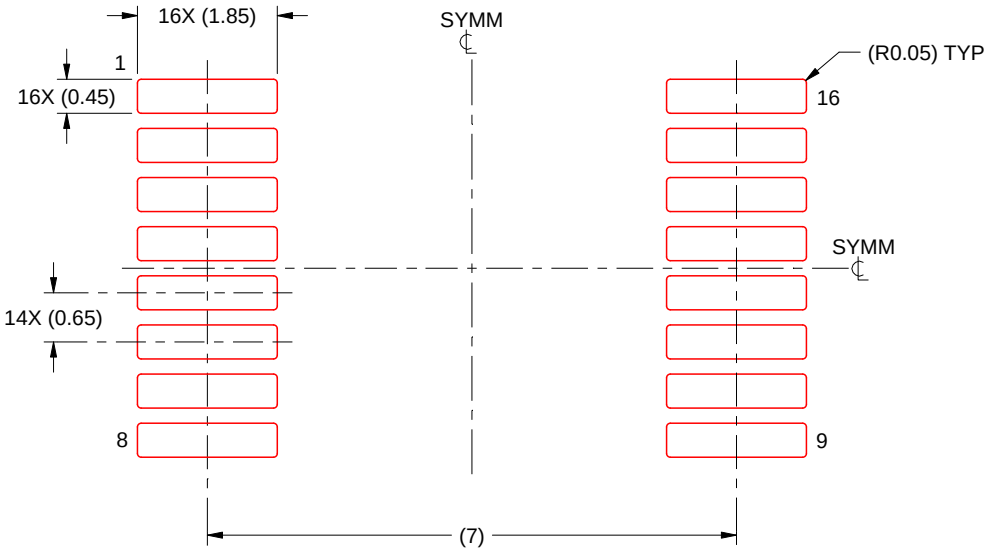

SOLDER PASTE EXAMPLE
BASED ON 0.125 mm THICK STENCIL
SCALE: 10X

4220763/A 05/2022

NOTES: (continued)

7. Laser cutting apertures with trapezoidal walls and rounded corners may offer better paste release. IPC-7525 may have alternate design recommendations.
8. Board assembly site may have different recommendations for stencil design.

重要なお知らせと免責事項

TI は、技術データと信頼性データ (データシートを含みます)、設計リソース (リファレンス デザインを含みます)、アプリケーションや設計に関する各種アドバイス、Web ツール、安全性情報、その他のリソースを、欠陥が存在する可能性のある「現状のまま」提供しており、商品性および特定目的に対する適合性の黙示保証、第三者の知的財産権の非侵害保証を含むいかなる保証も、明示的または黙示的にかかわらず拒否します。

これらのリソースは、TI 製品を使用する設計の経験を積んだ開発者への提供を意図したものです。(1) お客様のアプリケーションに適した TI 製品の選定、(2) お客様のアプリケーションの設計、検証、試験、(3) お客様のアプリケーションに該当する各種規格や、その他のあらゆる安全性、セキュリティ、規制、または他の要件への確実な適合に関する責任を、お客様のみが単独で負うものとします。

上記の各種リソースは、予告なく変更される可能性があります。これらのリソースは、リソースで説明されている TI 製品を使用するアプリケーションの開発の目的でのみ、TI はその使用をお客様に許諾します。これらのリソースに関して、他の目的で複製することや掲載することは禁止されています。TI や第三者の知的財産権のライセンスが付与されている訳ではありません。お客様は、これらのリソースを自身で使用した結果発生するあらゆる申し立て、損害、費用、損失、責任について、TI およびその代理人を完全に補償するものとし、TI は一切の責任を拒否します。

TI の製品は、 TI の販売条件 、 TI の総合的な品質ガイドライン 、 ti.com または TI 製品などに関連して提供される他の適用条件に従い提供されます。TI がこれらのリソースを提供することは、適用される TI の保証または他の保証の放棄の拡大や変更を意味するものではありません。 TI がカスタム、またはカスタマー仕様として明示的に指定していない限り、TI の製品は標準的なカタログに掲載される汎用機器です。

お客様がいかなる追加条項または代替条項を提案する場合も、TI はそれらに異議を唱え、拒否します。

Copyright © 2026, Texas Instruments Incorporated

最終更新日：2025 年 10 月