MAX3232E ±15kV IEC ESD 保護機能搭載、3V～5.5V マルチチャネル RS-232 ライン・ドライバ / レシーバ

1 特長

- RS-232 バス・ピン用 ESD 保護機能
  - ±15kV (HBM)
  - ±8kV (IEC61000-4-2、接触放電)
  - ±15kV (IEC61000-4-2、気中放電)
- TIA/EIA-232-F および ITU V.28 規格の要件に適合
- 3V～5.5V の V_{CC} 電源で動作
- 最大 250kbit/s で動作
- 2 つのドライバと 2 つのレシーバ
- 低消費電流:300μA (標準値)
- 外付けコンデンサ:4 × 0.1μF
- 3.3V 電源で 5V ロジック入力を受容
- 代替の高速デバイス (1Mbit/s) とピン互換
  - SN65C3232E (–40℃～+85℃)
  - SN75C3232E (0℃～70℃)

2 アプリケーション

- 産業用 PC
- 有線ネットワーク
- データ・センターおよびエンタープライズ・コンピューティング
- バッテリ駆動システム
- ノートブック PC
- パームトップ PC
- ハンドヘルド機器

3 概要

MAX3232E デバイスは 2 つのライン・ドライバ、2 つのライン・レシーバ、1 つのデュアル・チャージ・ポンプ回路で構成されており、±15kV のピン間 (シリアル・ポート接続ピン、GND を含む) IEC ESD 保護機能を備えています。

このデバイスは、TIA/EIA-232-F のスペックを満たし、非同期通信コントローラとシリアルポート・コネクタの間の電気的インターフェイスとして機能します。チャージ・ポンプと 4 つの小さな外付けコンデンサにより、3V～5.5V の単一電源で動作できます。本デバイスは最大 250kbit/s のデータ信号速度、最大 30V/μs のドライバ出力スルーレートで動作します。

製品情報(1)

部品番号	パッケージ	本体サイズ (公称)
MAX3232E	SOIC (D) (16)	9.90mm × 3.91mm
	SSOP (DB) (16)	6.20mm × 5.30mm
	SOIC (DW) (16)	10.30mm × 7.50mm
	TSSOP (PW) (16)	5.00mm × 4.40mm

(1) 利用可能なすべてのパッケージについては、このデータシートの末尾にある注文情報を参照してください。

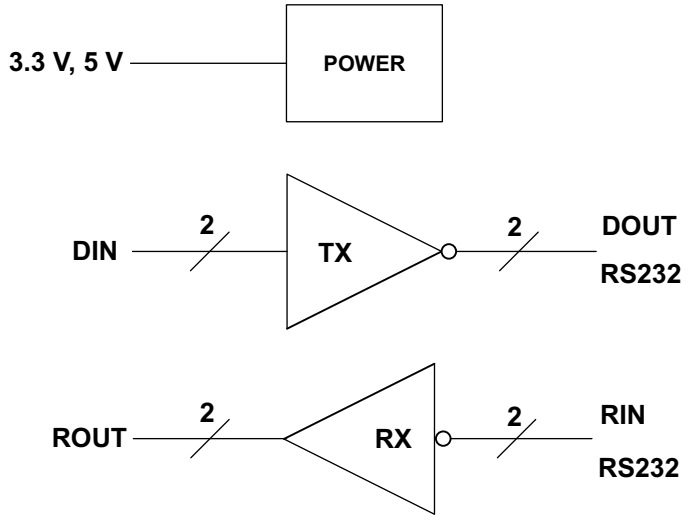

簡略ブロック図

英語版の TI 製品についての情報を翻訳したこの資料は、製品の概要を確認する目的で便宜的に提供しているものです。該当する正式な英語版の最新情報は、www.ti.com で閲覧でき、その内容が常に優先されます。TI では翻訳の正確性および妥当性につきましては一切保証いたしません。実際の設計などの前には、必ず最新版の英語版をご参照くださいますようお願いいたします。

Table of Contents

1 特長 ... 1
2 アプリケーション ... 1
3 概要 ... 1
4 Revision History ... 2
5 Pin Configuration and Functions ... 3
6 Specifications ... 4
6.1 Absolute Maximum Ratings ... 4
6.2 ESD Ratings ... 4
6.3 ESD Ratings - IEC Specifications ... 4
6.4 Recommended Operating Conditions(1) ... 4
6.5 Thermal Information ... 5
6.6 Electrical Characteristics — Device(1) ... 5
6.7 Electrical Characteristics — Driver(1) ... 5
6.8 Electrical Characteristics — Receiver(2) ... 6
6.9 Switching Characteristics(1) ... 6
6.10 Typical Characteristics ... 7
7 Parameter Measurement Information ... 8
8 Detailed Description ... 9
8.1 Overview ... 9
8.2 Functional Block Diagram ... 9
8.3 Feature Description ... 9
8.4 Device Functional Modes ... 10
9 Application and Implementation ... 11
9.1 Application Information ... 11
9.2 Typical Application ... 11
10 Power Supply Recommendations ... 12
11 Layout ... 13
11.1 Layout Guidelines ... 13
11.2 Layout Example ... 13
12 Device and Documentation Support ... 14
12.1 Receiving Notification of Documentation Updates ... 14
12.2 Support Resources ... 14
12.3 Trademarks ... 14
12.4 静電気放電に関する注意事項 ... 14
12.5 Glossary ... 14

4 Revision History

資料番号末尾の英字は改訂を表しています。その改訂履歴は英語版に準じています。

Changes from Revision D (May 2017) to Revision E (June 2021) — **Page**

- 「アプリケーション」を追加産業用 PC、有線ネットワーク、データ・センター、エンタープライズ・コンピューティング ... 1
- Added the *ESD Ratings - IEC Specifications* table. Added a table note about 1-uF capacitor requirement between V_{CC} and GND for D, DB and PW packages ... 4
- Changed the thermal parameter values for D, DB and PW packages in the *Thermal Information* table ... 5

Changes from Revision C (June 2015) to Revision D (May 2017) — **Page**

- Changed 3 V ± 5.5 V to 3 V to 5.5 V in the V_{CC} column of 表 9-1 ... 11

Changes from Revision B (December 2013) to Revision C (May 2015) — **Page**

- 「製品情報」表、「ピン構成および機能」セクション、「ESD 定格」表、「機能説明」セクション、「デバイスの機能モード」、「アプリケーションと実装」セクション、「電源に関する推奨事項」セクション、「レイアウト」セクション、「デバイスおよびドキュメントのサポート」セクション、「メカニカル、パッケージ、および注文情報」セクションを追加。 ... 1

Changes from Revision A (April 2007) to Revision B (December 2013) — **Page**

- ドキュメントを新しい TI データシートのフォーマットに更新 ... 1
- 「*注文情報*」表を削除 ... 1
- Added *Thermal Information* table ... 5

Copyright © 2021 Texas Instruments Incorporated

5 Pin Configuration and Functions

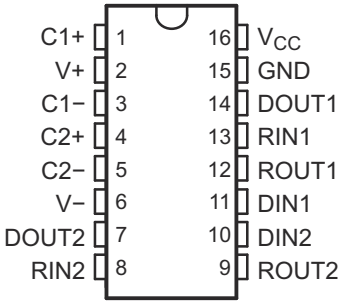

図 5-1. D, DW, DB and PW Package, 16-Pin SOIC, SSOP and TSSOP, Top View

表 5-1. Pin Functions

PIN		I/O	DESCRIPTION
NAME	NO.		
C1+	1	—	Positive lead of C1 capacitor
V+	2	O	Positive charge pump output for storage capacitor only
C1–	3	—	Negative lead of C1 capacitor
C2+	4	—	Positive lead of C2 capacitor
C2–	5	—	Negative lead of C2 capacitor
V–	6	O	Negative charge pump output for storage capacitor only
DOUT2	7	O	RS232 line data output (to remote RS232 system)
RIN2	8	I	RS232 line data input (from remote RS232 system)
ROUT2	9	O	Logic data output (to UART)
DIN2	10	I	Logic data input (from UART)
DIN1	11	I	Logic data input (from UART)
ROUT1	12	O	Logic data output (to UART)
RIN1	13	I	RS232 line data input (from remote RS232 system)
DOUT1	14	O	RS232 line data output (to remote RS232 system)
GND	15	—	Ground
V_{CC}	16	—	Supply Voltage, Connect to external 3-V to 5.5-V power supply

Copyright © 2021 Texas Instruments Incorporated

6 Specifications

6.1 Absolute Maximum Ratings

over operating free-air temperature range (unless otherwise noted)[1]

			MIN	MAX	UNIT
V_{CC}	Supply voltage[2]		–0.3	6	V
V+	Positive output supply voltage[2]		–0.3	7	V
V–	Negative output supply voltage[2]		0.3	–7	V
V+ – V–	Supply voltage difference[2]			13	V
V_I	Input voltage	Drivers	–0.3	6	V
		Receivers	–25	25	V
V_O	Output voltage	Drivers	–13.2	13.2	V
		Receivers	–0.3	V_{CC} + 0.3	V
T_J	Operating virtual junction temperature			150	°C
T_{stg}	Storage temperature		–65	150	°C

(1) Operation outside the *Absolute Maximum Ratings* may cause permanent device damage. *Absolute Maximum Ratings* do not imply functional operation of the device at these or any other conditions beyond those listed under *Recommended Operating Conditions*. If used outside the Recommended Operating Conditions but within the *Absolute Maximum Ratings*, the device may not be fully functional, and this may affect device reliability, functionality, performance, and shorten the device lifetime
(2) All voltages are with respect to network GND.

6.2 ESD Ratings

				VALUE	UNIT
$V_{(ESD)}$	Electrostatic discharge	Human body model (HBM), per ANSI/ESDA/JEDEC JS-001[1]	All pins except RIN and DOUT	±2000	V
			RIN and DOUT Pins	±15,000	
		Charged-device model (CDM), per JEDEC specification JESD22-C101[2]	All pins	±1500	

(1) JEDEC document JEP155 states that 500-V HBM allows safe manufacturing with a standard ESD control process.
(2) JEDEC document JEP157 states that 250-V CDM allows safe manufacturing with a standard ESD control process.

6.3 ESD Ratings - IEC Specifications

				VALUE	UNIT
$V_{(ESD)}$	Electrostatic discharge	IEC61000-4-2, Contact Discharge[1]	RS232 port pins (RIN, DOUT)	±8000	V
		IEC61000-4-2, Air-Gap Discharge[1]	RS232 port pins (RIN, DOUT)	±15,000	

(1) For D, DB and PW packages only: Minimum of 1-μF capacitor is required between V_{CC} and GND to meet the specified IEC 16000-4-2 rating.

6.4 Recommended Operating Conditions[1]

See 図 9-1.

				MIN	NOM	MAX	UNIT
	Supply voltage		V_{CC} = 3.3 V	3	3.3	3.6	V
			V_{CC} = 5 V	4.5	5	5.5	
V_{IH}	Driver high-level input voltage	DIN	V_{CC} = 3.3 V	2		5.5	V
			V_{CC} = 5 V	2.4		5.5	
V_{IL}	Driver low-level input voltage	DIN		0		0.8	V
V_I	Receiver input voltage	RIN		–25		25	V

Copyright © 2021 Texas Instruments Incorporated

6.4 Recommended Operating Conditions(1) (continued)

See 図 9-1.

			MIN	NOM	MAX	UNIT
T_A	Operating free-air temperature	MAX3232EC	0		70	°C
		MAX3232EI	–40		85	

(1) Test conditions are C1–C4 = 0.1 µF at V_{CC} = 3.3 V ± 0.3 V; C1 = 0.047 µF, C2–C4 = 0.33 µF at V_{CC} = 5 V ± 0.5 V.

6.5 Thermal Information

THERMAL METRIC(1)		MAX3232E				UNIT
		PW (TSSOP)	D (SOIC)	DW (SOIC)	DB (SSOP)	
		16 PINS	16 PINS	16 PINS	16 PINS	
$R_{\theta JA}$	Junction-to-ambient thermal resistance	108.2	85.9	72.3	103.1	°C/W
$R_{\theta JCtop}$	Junction-to-case (top) thermal resistance	39.0	43.1	33.5	49.2	°C/W
$R_{\theta JB}$	Junction-to-board thermal resistance	54.4	44.5	37.1	54.8	°C/W
ψ_{JT}	Junction-to-top characterization parameter	3.3	10.1	7.5	12	°C/W
ψ_{JB}	Junction-to-board characterization parameter	53.8	44.1	37.1	54.1	°C/W
$R_{\theta JCbot}$	Junction-to-case (bottom) thermal resistance	N/A	N/A	N/A	N/A	°C/W

(1) For more information about traditional and new thermal metrics, see the *Semiconductor and IC Package Thermal Metrics* application report.

6.6 Electrical Characteristics — Device(1)

over recommended ranges of supply voltage and operating free-air temperature (unless otherwise noted) (see 図 9-1).

PARAMETER		TEST CONDITIONS	MIN	TYP(2)	MAX	UNIT
I_{CC}	Supply current	No load, V_{CC} = 3.3 V or 5 V		0.3	1	mA

(1) Test conditions are C1–C4 = 0.1 µF at V_{CC} = 3.3 V ± 0.3 V; C1 = 0.047 µF, C2–C4 = 0.33 µF at V_{CC} = 5 V ± 0.5 V.
(2) All typical values are at V_{CC} = 3.3 V or V_{CC} = 5 V, and T_A = 25°C.

6.7 Electrical Characteristics — Driver(1)

over operating free-air temperature range (unless otherwise noted) (see 図 9-1).

PARAMETER		TEST CONDITIONS		MIN	TYP(2)	MAX	UNIT
V_{OH}	High-level output voltage	DOUT at R_L = 3 kΩ to GND,	DIN = GND	5	5.4		V
V_{OL}	Low-level output voltage	DOUT at R_L = 3 kΩ to GND,	DIN = V_{CC}	–5	–5.4		V
I_{IH}	High-level input current	V_I = V_{CC}			±0.01	±1	µA
I_{IL}	Low-level input current	V_I at GND			±0.01	±1	µA
I_{OS} (3)	Short-circuit output current	V_{CC} = 3.6 V,	V_O = 0 V		±35	±60	mA
		V_{CC} = 5.5 V,	V_O = 0 V				
r_O	Output resistance	V_{CC}, V+, and V– = 0 V,	V_O = ±2 V	300	10M		Ω

(1) Test conditions are C1–C4 = 0.1 µF at V_{CC} = 3.3 V ± 0.3 V; C1 = 0.047 µF, C2–C4 = 0.33 µF at V_{CC} = 5 V ± 0.5 V.
(2) Short-circuit durations should be controlled to prevent exceeding the device absolute power dissipation ratings, and not more than one output should be shorted at a time.
(3) All typical values are at V_{CC} = 3.3 V or V_{CC} = 5 V, and T_A = 25°C.

6.8 Electrical Characteristics — Receiver[2]

over recommended ranges of supply voltage and operating free-air temperature (unless otherwise noted) (see 図 9-1).

PARAMETER		TEST CONDITIONS	MIN	TYP[1]	MAX	UNIT
V_{OH}	High-level output voltage	I_{OH} = –1 mA	V_{CC} – 0.6	V_{CC} – 0.1		V
V_{OL}	Low-level output voltage	I_{OL} = 1.6 mA			0.4	V
V_{IT+}	Positive-going input threshold voltage	V_{CC} = 3.3 V		1.5	2.4	V
		V_{CC} = 5 V		1.8	2.4	
V_{IT-}	Negative-going input threshold voltage	V_{CC} = 3.3 V	0.6	1.2		V
		V_{CC} = 5 V	0.8	1.5		
V_{hys}	Input hysteresis (V_{IT+} – V_{IT-})			0.3		V
r_i	Input resistance	V_I = ±3 V to ±25 V	3	5	7	kΩ

(1) All typical values are at V_{CC} = 3.3 V or V_{CC} = 5 V, and T_A = 25°C.
(2) Test conditions are C1–C4 = 0.1 µF at V_{CC} = 3.3 V ± 0.3 V; C1 = 0.047 µF, C2–C4 = 0.33 µF at V_{CC} = 5 V ± 0.5 V.

6.9 Switching Characteristics[1]

over recommended ranges of supply voltage and operating free-air temperature (unless otherwise noted) (see 図 9-1)

PARAMETER		TEST CONDITIONS		MIN	TYP[2]	MAX	UNIT
	Maximum data rate	R_L = 3 kΩ, One DOUT switching,	C_L = 1000 pF, see 図 7-1	150	250		kbit/s
$t_{sk(p)}$	Driver pulse skew[3]	R_L = 3 kΩ to 7 kΩ, see 図 7-2	C_L = 150 pF to 2500 pF,		300		ns
SR(tr)	Driver slew rate, transition region (see 図 7-1)	R_L = 3 kΩ to 7 kΩ, V_{CC} = 3.3 V	C_L = 150 pF to 1000 pF	6		30	V/µs
			C_L = 150 pF to 2500 pF	4		30	
t_{PLH}	Receiver propagation delay time, low- to high-level output	C_L = 150 pF, see 図 7-3			300		ns
t_{PHL}	Receiver propagation delay time, high- to low-level output				300		ns
$t_{sk(p)}$	Receiver pulse skew[3]				300		ns

(1) Test conditions are C1–C4 = 0.1 µF at V_{CC} = 3.3 V ± 0.3 V; C1 = 0.047 µF, C2–C4 = 0.33 µF at V_{CC} = 5 V ± 0.5 V.
(2) All typical values are at V_{CC} = 3.3 V or V_{CC} = 5 V, and T_A = 25°C.
(3) Pulse skew is defined as $|t_{PLH} – t_{PHL}|$ of each channel of the same device.

Copyright © 2021 Texas Instruments Incorporated

6.10 Typical Characteristics

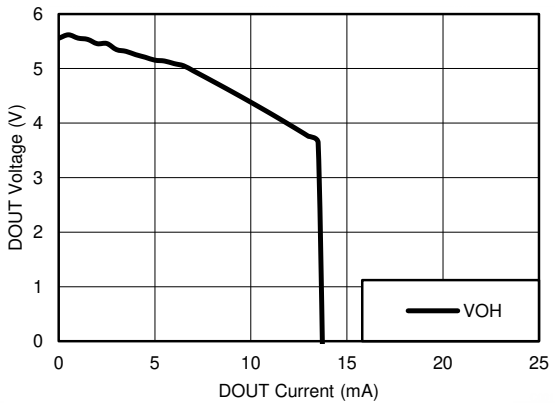

V_{CC} = 3.3 V

図 6-1. DOUT V_{OH} vs Load Current, Both Drivers Loaded

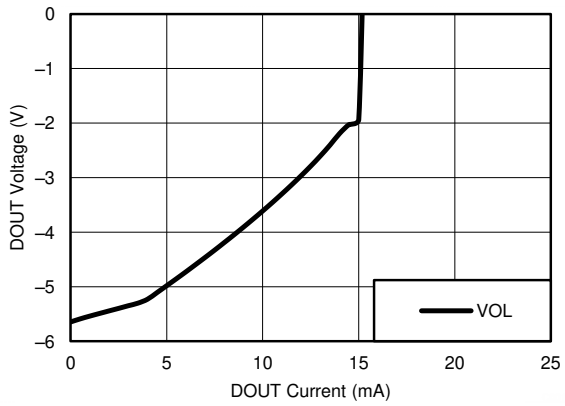

V_{CC} = 3.3 V

図 6-2. DOUT V_{OL} vs Load Current, Both Drivers Loaded

7 Parameter Measurement Information

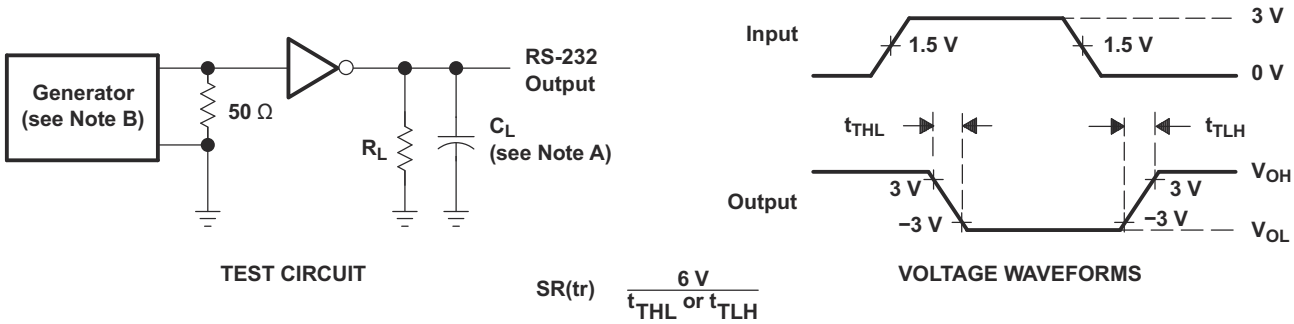

$$SR(tr) \quad \frac{6\ V}{t_{THL} \text{ or } t_{TLH}}$$

A. C_L includes probe and jig capacitance

B. The pulse generator has the following characteristics: PRR = 250 kbit/s, Z_O = 50 Ω, 50% duty cycle, t_r ≤ 10 ns, t_f ≤ 10 ns

図 7-1. Driver Slew Rate

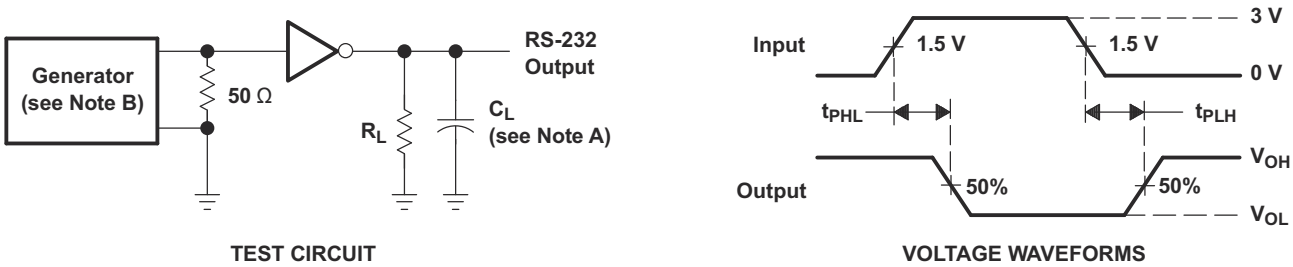

A. C_L includes probe and jig capacitance

B. The pulse generator has the following characteristics: PRR = 250 kbit/s, Z_O = 50 Ω, 50% duty cycle, t_r ≤ 10 ns, t_f ≤ 10 ns

図 7-2. Driver Pulse Skew

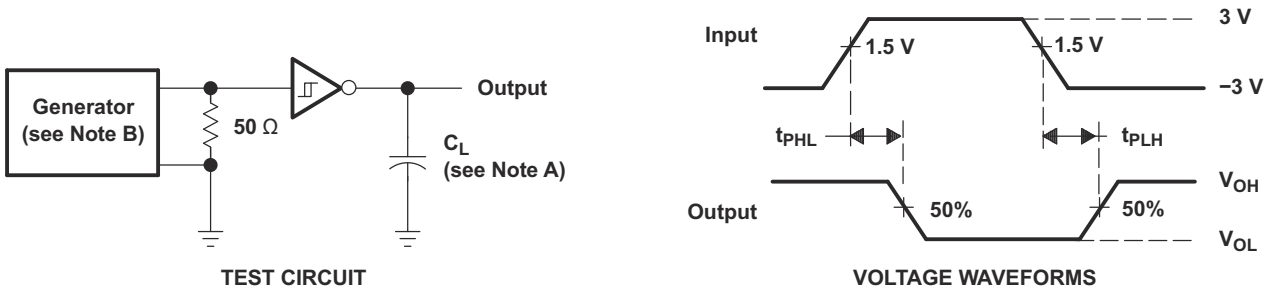

A. C_L includes probe and jig capacitance

B. The pulse generator has the following characteristics: Z_O = 50 Ω, 50% duty cycle, t_r ≤ 10 ns, t_f ≤ 10 ns

図 7-3. Receiver Propagation Delay Times

Copyright © 2021 Texas Instruments Incorporated

8 Detailed Description

8.1 Overview

The MAX3232E device consists of two line drivers, two-line receivers, and a dual charge-pump circuit with IEC61000-4-2 ESD protection terminal to terminal (serial-port connection terminals, including GND). The device meets the requirements of TIA/EIA-232-F and provides the electrical interface between an asynchronous communication controller and the serial-port connector. The charge pump and four small external capacitors allow operation from a single 3-V to 5.5-V supply. The device operates at data signaling rates up to 250 kbit/s and a maximum of 30-V/μs driver output slew rate. Outputs are protected against shorts to ground.

8.2 Functional Block Diagram

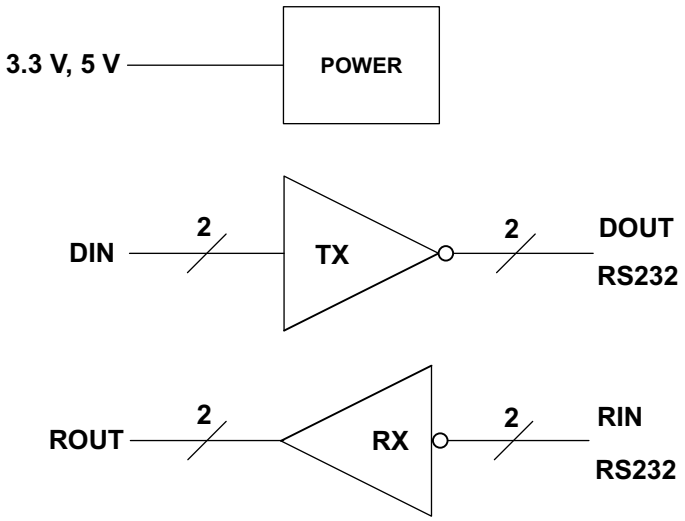

8.3 Feature Description

8.3.1 Power

The power block increases, inverts, and regulates voltage at V+ and V– pins using a charge pump that requires four external capacitors.

8.3.2 RS232 Driver

Two drivers interface standard logic level to RS232 levels. Both DIN inputs must be valid high or low.

8.3.3 RS232 Receiver

Two receivers interface RS232 levels to standard logic levels. An open input will result in a high output on ROUT. Each RIN input includes an internal standard RS232 load.

8.4 Device Functional Modes

表 8-1 and 表 8-2 list the functional modes of the drivers and receivers of MAX3232E.

表 8-1. Each Driver(1)

INPUT DIN	OUTPUT DOUT
L	H
H	L

(1) H = high level, L = low level

表 8-2. Each Receiver(1)

INPUT RIN	OUTPUT ROUT
L	H
H	L
Open	H

(1) H = high level, L = low level,
Open = input disconnected or connected driver off

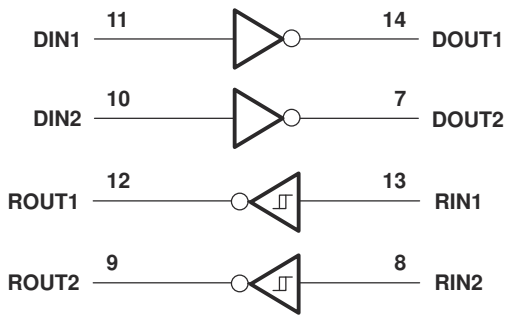

図 8-1. Logic Diagram

8.4.1 V_{CC} Powered by 3 V to 5.5 V

The device is in normal operation.

8.4.2 V_{CC} Unpowered, V_{CC} = 0 V

When MAX3232E is unpowered, it can be safely connected to an active remote RS232 device.

Copyright © 2021 Texas Instruments Incorporated

9 Application and Implementation

Note

Information in the following applications sections is not part of the TI component specification, and TI does not warrant its accuracy or completeness. TI's customers are responsible for determining suitability of components for their purposes, as well as validating and testing their design implementation to confirm system functionality.

9.1 Application Information

For proper operation, add capacitors as shown in 表 9-1.

9.2 Typical Application

ROUT and DIN connect to UART or general-purpose logic lines. RIN and DOUT lines connect to a RS232 connector or cable.

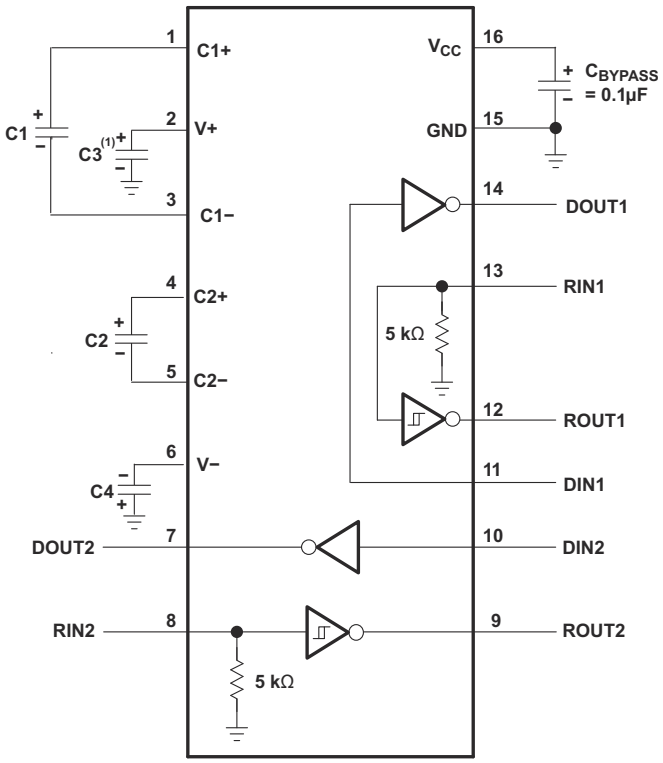

A. C3 can be connected to V_{CC} or GND

A. Resistor values shown are nominal.

B. Nonpolorized ceramic capacitors are acceptable. If polarized tantalum or electrolytic capacitors are used, they should be connected as shown.

図 9-1. Typical Operating Circuit and Capacitor Values

表 9-1. VCC vs Capacitor Values

V_{CC}	C1	C2, C3, C4
3.3 V ± 0.3 V	0.1 µF	0.1 µF
5 V ± 0.5 V	0.047 µF	0.33 µF
3 V to 5.5 V	0.1 µF	0.47 µF

9.2.1 Design Requirements

The recommended V_{CC} is 3.3 V or 5 V. 3 V to 5.5 V is also possible

The maximum recommended bit rate is 250 kbit/s.

9.2.2 Detailed Design Procedure

All DIN inputs must be connected to valid low or high logic levels.

Select capacitor values based on V_{CC} level for best performance.

9.2.3 Application Curve

図 9-2 curves are for 3.3-V VCC and 250-kbit/s alternative bit data stream.

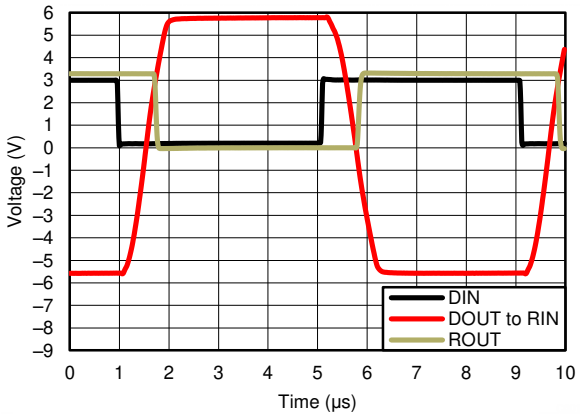

図 9-2. 250 kbit/s Driver to Receiver Loopback Timing Waveform, V_{CC} = 3.3 V

10 Power Supply Recommendations

The supply voltage, V_{CC}, should be between 3 V and 5.5 V. Select the values of the charge-pump capacitors using 表 9-1.

Copyright © 2021 Texas Instruments Incorporated

11 Layout

11.1 Layout Guidelines

Keep the external capacitor traces short, specifically on the C1 and C2 nodes that have the fastest rise and fall times.

11.2 Layout Example

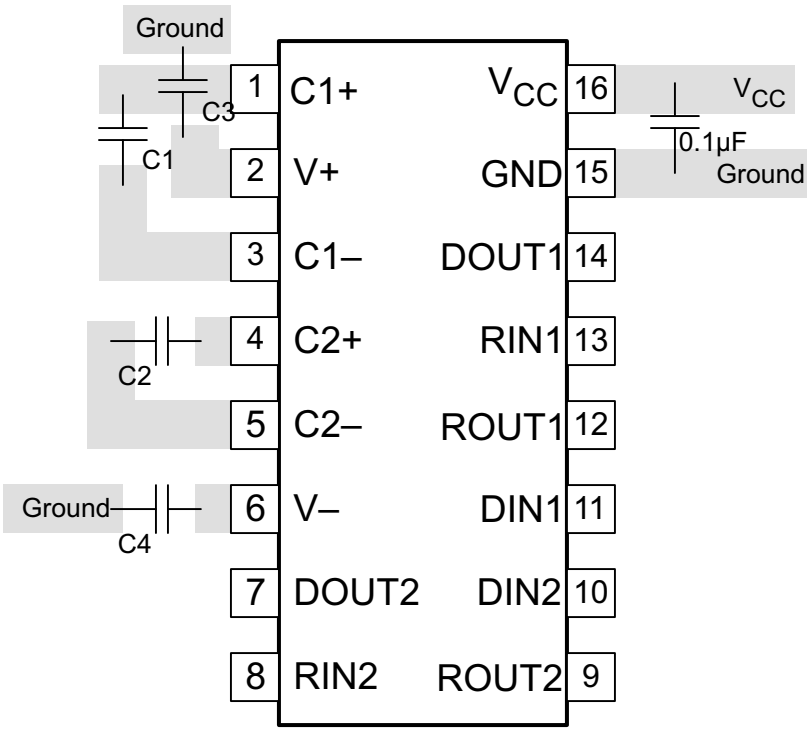

図 11-1. Layout Diagram

12 Device and Documentation Support

12.1 Receiving Notification of Documentation Updates

To receive notification of documentation updates, navigate to the device product folder on ti.com. Click on *Subscribe to updates* to register and receive a weekly digest of any product information that has changed. For change details, review the revision history included in any revised document.

12.2 Support Resources

TI E2E™ support forums are an engineer's go-to source for fast, verified answers and design help — straight from the experts. Search existing answers or ask your own question to get the quick design help you need.

Linked content is provided "AS IS" by the respective contributors. They do not constitute TI specifications and do not necessarily reflect TI's views; see TI's Terms of Use.

12.3 Trademarks

TI E2E™ is a trademark of Texas Instruments.
すべての商標は、それぞれの所有者に帰属します。

12.4 静電気放電に関する注意事項

この IC は、ESD によって破損する可能性があります。テキサス・インスツルメンツは、IC を取り扱う際には常に適切な注意を払うことを推奨します。正しい ESD 対策をとらないと、デバイスを破損するおそれがあります。

ESD による破損は、わずかな性能低下からデバイスの完全な故障まで多岐にわたります。精密な IC の場合、パラメータがわずかに変化するだけで公表されている仕様から外れる可能性があるため、破損が発生しやすくなっています。

12.5 Glossary

TI Glossary	This glossary lists and explains terms, acronyms, and definitions.

Mechanical, Packaging, and Orderable Information

The following pages include mechanical packaging and orderable information. This information is the most current data available for the designated devices. This data is subject to change without notice and revision of this document. For browser based versions of this data sheet, refer to the left hand navigation.

Copyright © 2021 Texas Instruments Incorporated

PACKAGING INFORMATION

Orderable part number	Status (1)	Material type (2)	Package | Pins	Package qty | Carrier	RoHS (3)	Lead finish/ Ball material (4)	MSL rating/ Peak reflow (5)	Op temp (°C)	Part marking (6)
MAX3232ECD	Obsolete	Production	SOIC (D) | 16	-	-	Call TI	Call TI	0 to 70	MAX3232EC
MAX3232ECDBR	Active	Production	SSOP (DB) | 16	2000 | LARGE T&R	Yes	NIPDAU	Level-1-260C-UNLIM	0 to 70	MP232EC
MAX3232ECDBR.A	Active	Production	SSOP (DB) | 16	2000 | LARGE T&R	Yes	NIPDAU	Level-1-260C-UNLIM	0 to 70	MP232EC
MAX3232ECDBRG4	Active	Production	SSOP (DB) | 16	2000 | LARGE T&R	Yes	NIPDAU	Level-1-260C-UNLIM	-40 to 85	MP232EC
MAX3232ECDBRG4.A	Active	Production	SSOP (DB) | 16	2000 | LARGE T&R	Yes	NIPDAU	Level-1-260C-UNLIM	-40 to 85	MP232EC
MAX3232ECDR	Active	Production	SOIC (D) | 16	2500 | LARGE T&R	Yes	NIPDAU	Level-1-260C-UNLIM	0 to 70	MAX3232EC
MAX3232ECDR.A	Active	Production	SOIC (D) | 16	2500 | LARGE T&R	Yes	NIPDAU	Level-1-260C-UNLIM	0 to 70	MAX3232EC
MAX3232ECDRE4	Active	Production	SOIC (D) | 16	2500 | LARGE T&R	Yes	NIPDAU	Level-1-260C-UNLIM	0 to 70	MAX3232EC
MAX3232ECDW	Obsolete	Production	SOIC (DW) | 16	-	-	Call TI	Call TI	0 to 70	MAX3232EC
MAX3232ECDWR	Active	Production	SOIC (DW) | 16	2000 | LARGE T&R	Yes	NIPDAU	Level-1-260C-UNLIM	0 to 70	MAX3232EC
MAX3232ECDWR.B	Active	Production	SOIC (DW) | 16	2000 | LARGE T&R	Yes	NIPDAU	Level-1-260C-UNLIM	0 to 70	MAX3232EC
MAX3232ECPWR	Active	Production	TSSOP (PW) | 16	2000 | LARGE T&R	Yes	NIPDAU | SN	Level-1-260C-UNLIM	0 to 70	MP232EC
MAX3232ECPWR.A	Active	Production	TSSOP (PW) | 16	2000 | LARGE T&R	Yes	NIPDAU	Level-1-260C-UNLIM	0 to 70	MP232EC
MAX3232ECPWRG4	Active	Production	TSSOP (PW) | 16	2000 | LARGE T&R	Yes	NIPDAU	Level-1-260C-UNLIM	-40 to 85	MP232EC
MAX3232ECPWRG4.A	Active	Production	TSSOP (PW) | 16	2000 | LARGE T&R	Yes	NIPDAU	Level-1-260C-UNLIM	-40 to 85	MP232EC
MAX3232EID	Obsolete	Production	SOIC (D) | 16	-	-	Call TI	Call TI	-40 to 85	MAX3232EI
MAX3232EIDBR	Active	Production	SSOP (DB) | 16	2000 | LARGE T&R	Yes	NIPDAU	Level-1-260C-UNLIM	-40 to 85	MP232EI
MAX3232EIDBR.A	Active	Production	SSOP (DB) | 16	2000 | LARGE T&R	Yes	NIPDAU	Level-1-260C-UNLIM	-40 to 85	MP232EI
MAX3232EIDBRE4	Active	Production	SSOP (DB) | 16	2000 | LARGE T&R	Yes	NIPDAU	Level-1-260C-UNLIM	-40 to 85	MP232EI
MAX3232EIDR	Active	Production	SOIC (D) | 16	2500 | LARGE T&R	Yes	NIPDAU	Level-1-260C-UNLIM	-40 to 85	MAX3232EI
MAX3232EIDR.A	Active	Production	SOIC (D) | 16	2500 | LARGE T&R	Yes	NIPDAU	Level-1-260C-UNLIM	-40 to 85	MAX3232EI
MAX3232EIDRG4	Active	Production	SOIC (D) | 16	2500 | LARGE T&R	Yes	NIPDAU	Level-1-260C-UNLIM	-40 to 85	MAX3232EI
MAX3232EIDRG4.A	Active	Production	SOIC (D) | 16	2500 | LARGE T&R	Yes	NIPDAU	Level-1-260C-UNLIM	-40 to 85	MAX3232EI
MAX3232EIDW	Obsolete	Production	SOIC (DW) | 16	-	-	Call TI	Call TI	-40 to 85	MAX3232EI
MAX3232EIDWR	Active	Production	SOIC (DW) | 16	2000 | LARGE T&R	Yes	NIPDAU	Level-1-260C-UNLIM	-40 to 85	MAX3232EI
MAX3232EIDWR.B	Active	Production	SOIC (DW) | 16	2000 | LARGE T&R	Yes	NIPDAU	Level-1-260C-UNLIM	-40 to 85	MAX3232EI
MAX3232EIPWR	Active	Production	TSSOP (PW) | 16	2000 | LARGE T&R	Yes	NIPDAU	Level-1-260C-UNLIM	-40 to 85	MP232EI
MAX3232EIPWR.A	Active	Production	TSSOP (PW) | 16	2000 | LARGE T&R	Yes	NIPDAU	Level-1-260C-UNLIM	-40 to 85	MP232EI
MAX3232EIPWRG4	Active	Production	TSSOP (PW) | 16	2000 | LARGE T&R	Yes	NIPDAU	Level-1-260C-UNLIM	-40 to 85	MP232EI

(1) **Status:** For more details on status, see our product life cycle.

(2) **Material type:** When designated, preproduction parts are prototypes/experimental devices, and are not yet approved or released for full production. Testing and final process, including without limitation quality assurance, reliability performance testing, and/or process qualification, may not yet be complete, and this item is subject to further changes or possible discontinuation. If available for ordering, purchases will be subject to an additional waiver at checkout, and are intended for early internal evaluation purposes only. These items are sold without warranties of any kind.

(3) **RoHS values:** Yes, No, RoHS Exempt. See the TI RoHS Statement for additional information and value definition.

(4) **Lead finish/Ball material:** Parts may have multiple material finish options. Finish options are separated by a vertical ruled line. Lead finish/Ball material values may wrap to two lines if the finish value exceeds the maximum column width.

(5) **MSL rating/Peak reflow:** The moisture sensitivity level ratings and peak solder (reflow) temperatures. In the event that a part has multiple moisture sensitivity ratings, only the lowest level per JEDEC standards is shown. Refer to the shipping label for the actual reflow temperature that will be used to mount the part to the printed circuit board.

(6) **Part marking:** There may be an additional marking, which relates to the logo, the lot trace code information, or the environmental category of the part.

Multiple part markings will be inside parentheses. Only one part marking contained in parentheses and separated by a "~" will appear on a part. If a line is indented then it is a continuation of the previous line and the two combined represent the entire part marking for that device.

Important Information and Disclaimer: The information provided on this page represents TI's knowledge and belief as of the date that it is provided. TI bases its knowledge and belief on information provided by third parties, and makes no representation or warranty as to the accuracy of such information. Efforts are underway to better integrate information from third parties. TI has taken and continues to take reasonable steps to provide representative and accurate information but may not have conducted destructive testing or chemical analysis on incoming materials and chemicals. TI and TI suppliers consider certain information to be proprietary, and thus CAS numbers and other limited information may not be available for release.

In no event shall TI's liability arising out of such information exceed the total purchase price of the TI part(s) at issue in this document sold by TI to Customer on an annual basis.

OTHER QUALIFIED VERSIONS OF MAX3232E :

- Automotive : MAX3232E-Q1

NOTE: Qualified Version Definitions:

- Automotive - Q100 devices qualified for high-reliability automotive applications targeting zero defects

TAPE AND REEL INFORMATION

REEL DIMENSIONS

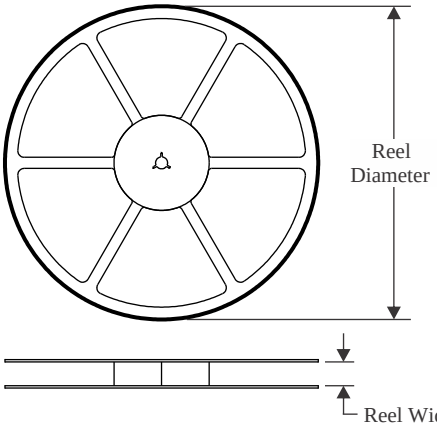

TAPE DIMENSIONS

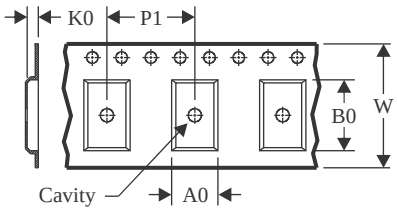

A0	Dimension designed to accommodate the component width
B0	Dimension designed to accommodate the component length
K0	Dimension designed to accommodate the component thickness
W	Overall width of the carrier tape
P1	Pitch between successive cavity centers

QUADRANT ASSIGNMENTS FOR PIN 1 ORIENTATION IN TAPE

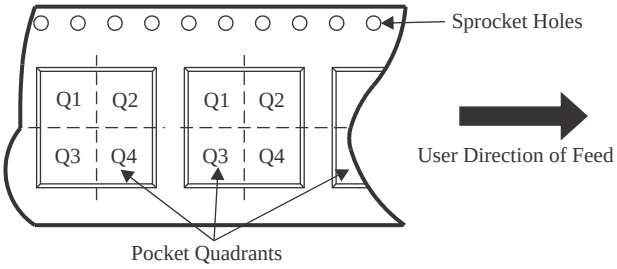

*All dimensions are nominal

Device	Package Type	Package Drawing	Pins	SPQ	Reel Diameter (mm)	Reel Width W1 (mm)	A0 (mm)	B0 (mm)	K0 (mm)	P1 (mm)	W (mm)	Pin1 Quadrant
MAX3232ECDBR	SSOP	DB	16	2000	330.0	16.4	8.35	6.6	2.4	12.0	16.0	Q1
MAX3232ECDBRG4	SSOP	DB	16	2000	330.0	16.4	8.35	6.6	2.4	12.0	16.0	Q1
MAX3232ECDR	SOIC	D	16	2500	330.0	16.4	6.5	10.3	2.1	8.0	16.0	Q1
MAX3232ECDWR	SOIC	DW	16	2000	330.0	16.4	10.75	10.7	2.7	12.0	16.0	Q1
MAX3232ECPWR	TSSOP	PW	16	2000	330.0	12.4	6.9	5.6	1.6	8.0	12.0	Q1
MAX3232ECPWR	TSSOP	PW	16	2000	330.0	12.4	6.9	5.6	1.6	8.0	12.0	Q1
MAX3232ECPWR	TSSOP	PW	16	2000	330.0	12.4	6.9	5.6	1.6	8.0	12.0	Q1
MAX3232ECPWRG4	TSSOP	PW	16	2000	330.0	12.4	6.9	5.6	1.6	8.0	12.0	Q1
MAX3232ECPWRG4	TSSOP	PW	16	2000	330.0	12.4	6.9	5.6	1.6	8.0	12.0	Q1
MAX3232EIDBR	SSOP	DB	16	2000	330.0	16.4	8.35	6.6	2.4	12.0	16.0	Q1
MAX3232EIDR	SOIC	D	16	2500	330.0	16.4	6.5	10.3	2.1	8.0	16.0	Q1
MAX3232EIDR	SOIC	D	16	2500	330.0	16.4	6.5	10.3	2.1	8.0	16.0	Q1
MAX3232EIDRG4	SOIC	D	16	2500	330.0	16.4	6.5	10.3	2.1	8.0	16.0	Q1
MAX3232EIDWR	SOIC	DW	16	2000	330.0	16.4	10.75	10.7	2.7	12.0	16.0	Q1
MAX3232EIPWR	TSSOP	PW	16	2000	330.0	12.4	6.9	5.6	1.6	8.0	12.0	Q1

TAPE AND REEL BOX DIMENSIONS

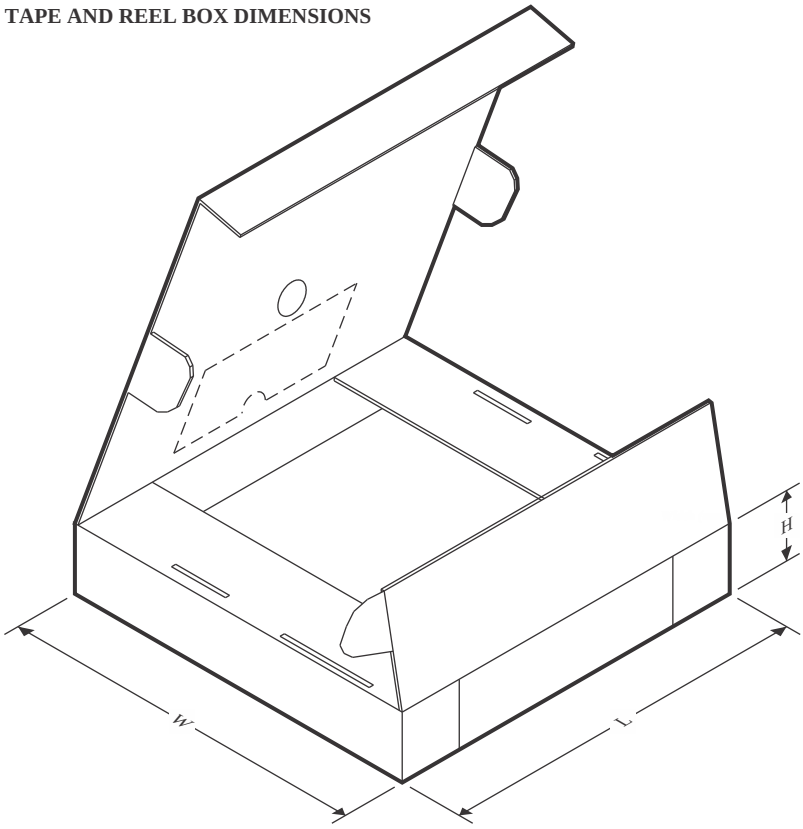

*All dimensions are nominal

Device	Package Type	Package Drawing	Pins	SPQ	Length (mm)	Width (mm)	Height (mm)
MAX3232ECDBR	SSOP	DB	16	2000	353.0	353.0	32.0
MAX3232ECDBRG4	SSOP	DB	16	2000	353.0	353.0	32.0
MAX3232ECDR	SOIC	D	16	2500	353.0	353.0	32.0
MAX3232ECDWR	SOIC	DW	16	2000	350.0	350.0	43.0
MAX3232ECPWR	TSSOP	PW	16	2000	353.0	353.0	32.0
MAX3232ECPWR	TSSOP	PW	16	2000	356.0	356.0	35.0
MAX3232ECPWR	TSSOP	PW	16	2000	353.0	353.0	32.0
MAX3232ECPWRG4	TSSOP	PW	16	2000	353.0	353.0	32.0
MAX3232ECPWRG4	TSSOP	PW	16	2000	353.0	353.0	32.0
MAX3232EIDBR	SSOP	DB	16	2000	353.0	353.0	32.0
MAX3232EIDR	SOIC	D	16	2500	353.0	353.0	32.0
MAX3232EIDR	SOIC	D	16	2500	353.0	353.0	32.0
MAX3232EIDRG4	SOIC	D	16	2500	353.0	353.0	32.0
MAX3232EIDWR	SOIC	DW	16	2000	350.0	350.0	43.0
MAX3232EIPWR	TSSOP	PW	16	2000	353.0	353.0	32.0

D (R–PDSO–G16) PLASTIC SMALL OUTLINE

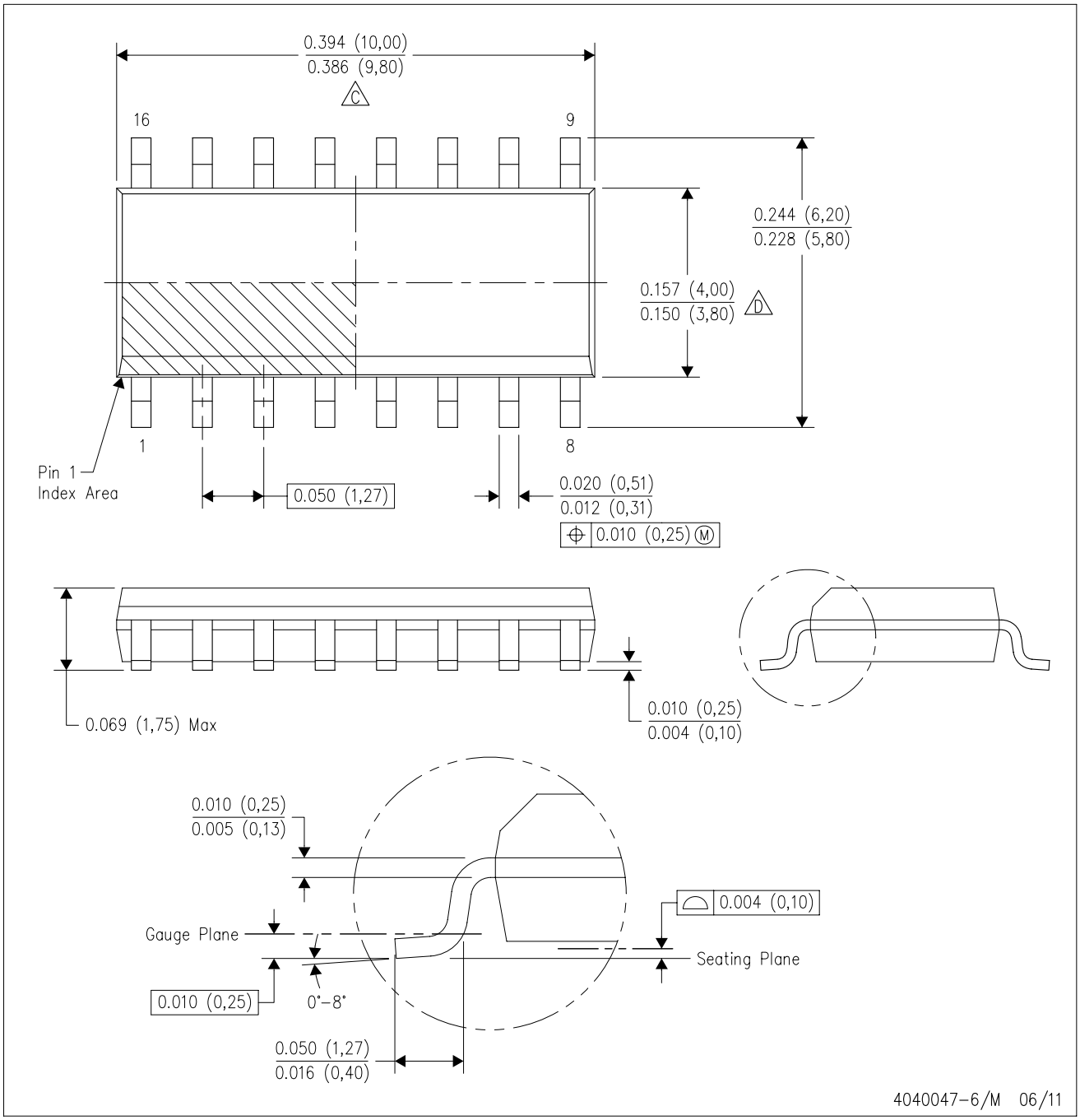

NOTES:
A. All linear dimensions are in inches (millimeters).
B. This drawing is subject to change without notice.
C. Body length does not include mold flash, protrusions, or gate burrs. Mold flash, protrusions, or gate burrs shall not exceed 0.006 (0,15) each side.
D. Body width does not include interlead flash. Interlead flash shall not exceed 0.017 (0,43) each side.
E. Reference JEDEC MS–012 variation AC.

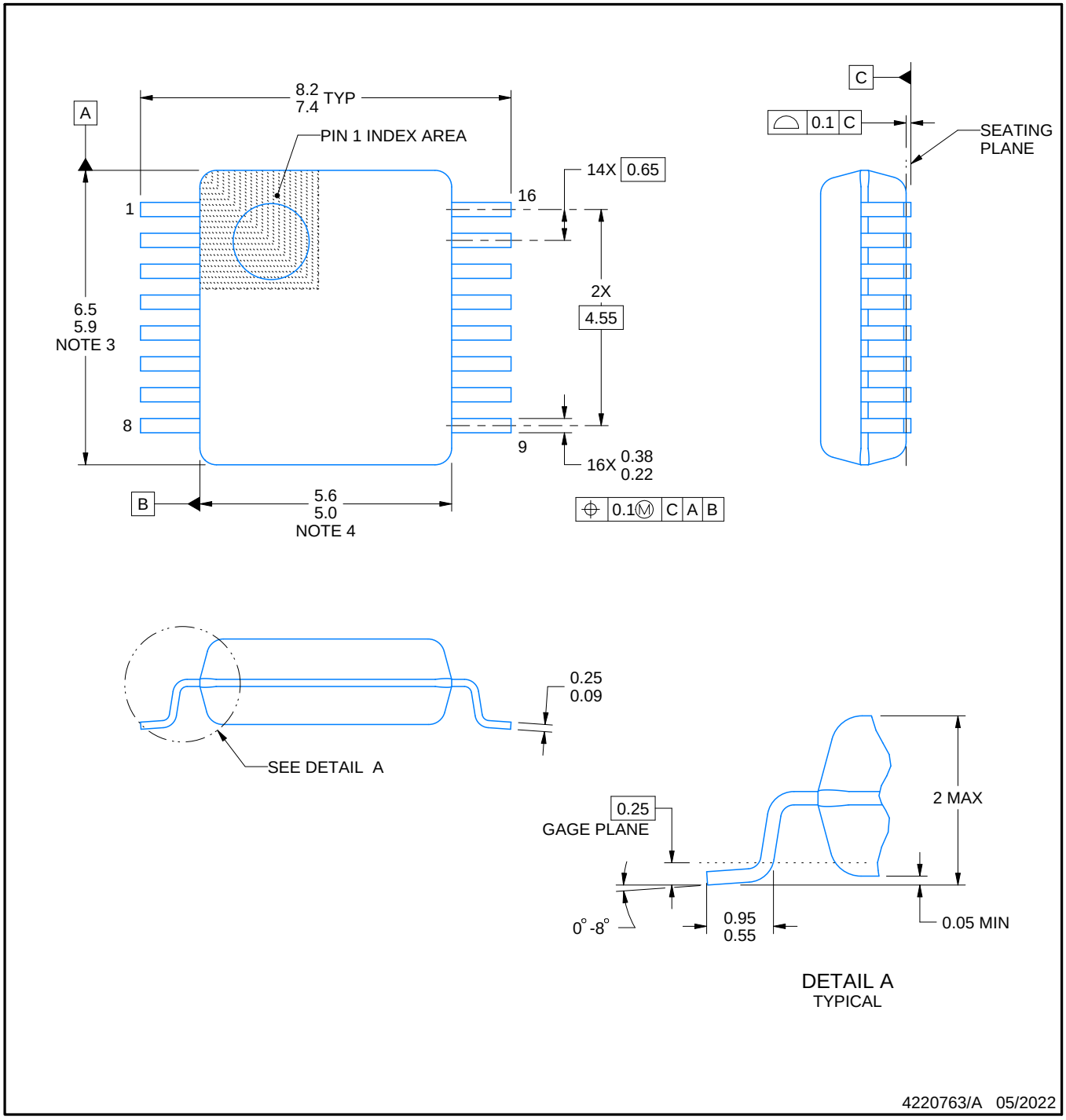

NOTES:

1. All linear dimensions are in millimeters. Any dimensions in parenthesis are for reference only. Dimensioning and tolerancing per ASME Y14.5M.
2. This drawing is subject to change without notice.
3. This dimension does not include mold flash, protrusions, or gate burrs. Mold flash, protrusions, or gate burrs shall not exceed 0.15 mm per side.
4. Reference JEDEC registration MO-150.

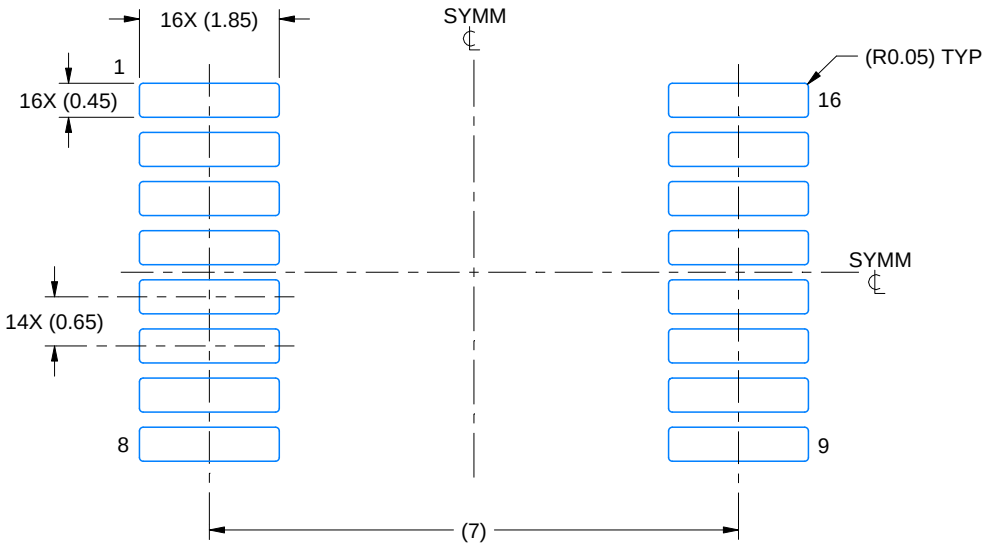

LAND PATTERN EXAMPLE
EXPOSED METAL SHOWN
SCALE: 10X

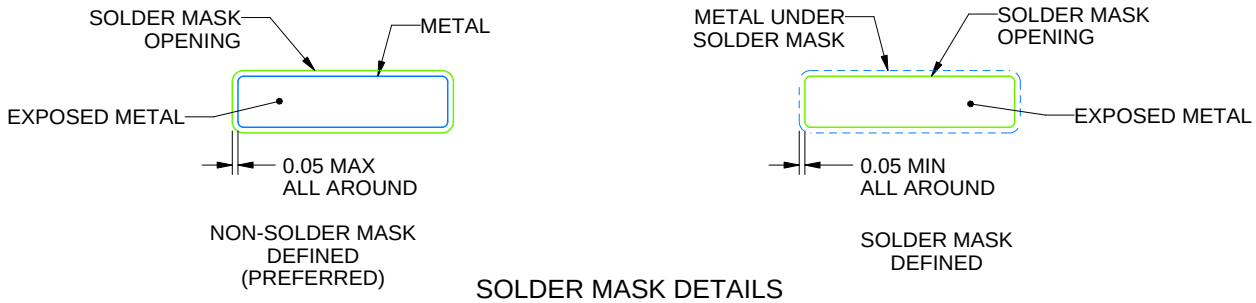

SOLDER MASK DETAILS

4220763/A 05/2022

NOTES: (continued)

5. Publication IPC-7351 may have alternate designs.
6. Solder mask tolerances between and around signal pads can vary based on board fabrication site.

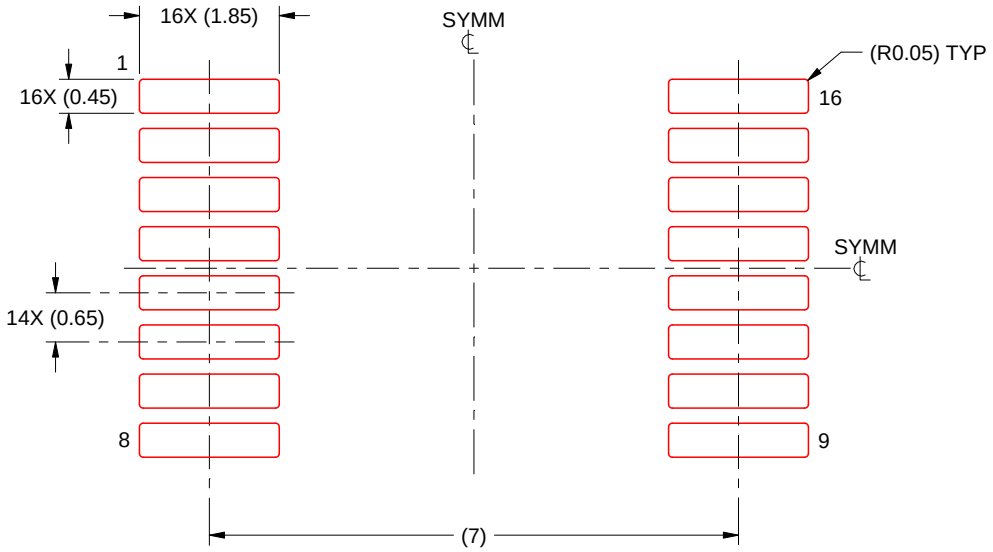

SOLDER PASTE EXAMPLE
BASED ON 0.125 mm THICK STENCIL
SCALE: 10X

4220763/A 05/2022

NOTES: (continued)

7. Laser cutting apertures with trapezoidal walls and rounded corners may offer better paste release. IPC-7525 may have alternate design recommendations.
8. Board assembly site may have different recommendations for stencil design.

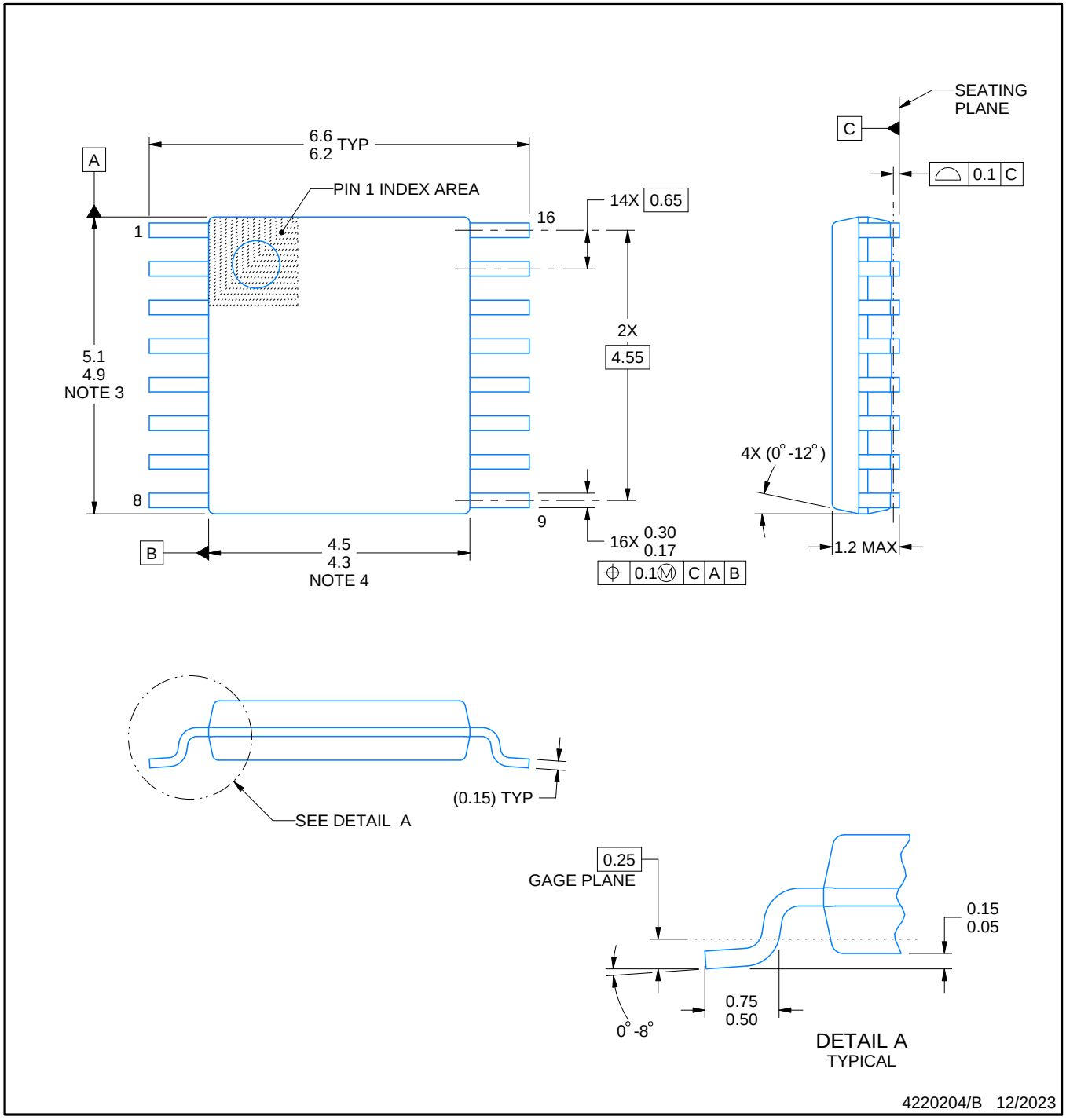

NOTES:

1. All linear dimensions are in millimeters. Any dimensions in parenthesis are for reference only. Dimensioning and tolerancing per ASME Y14.5M.
2. This drawing is subject to change without notice.
3. This dimension does not include mold flash, protrusions, or gate burrs. Mold flash, protrusions, or gate burrs shall not exceed 0.15 mm per side.
4. This dimension does not include interlead flash. Interlead flash shall not exceed 0.25 mm per side.
5. Reference JEDEC registration MO-153.

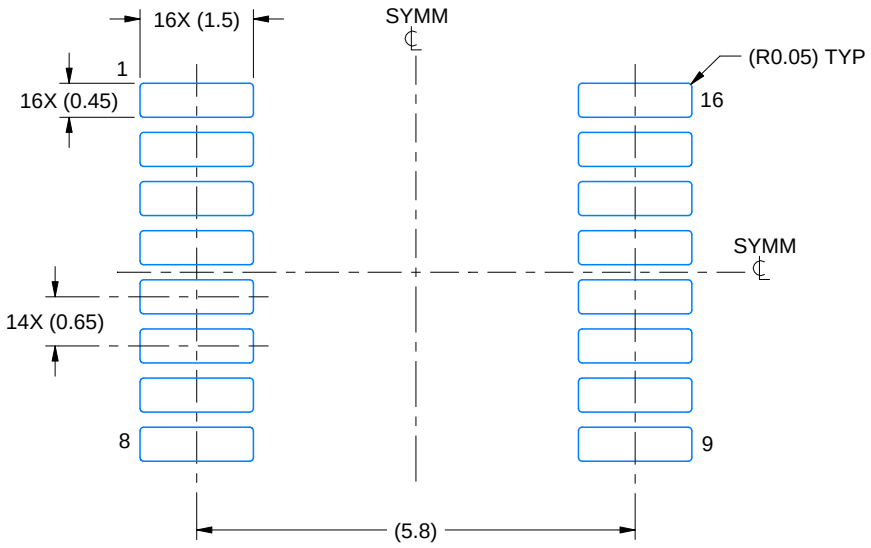

LAND PATTERN EXAMPLE
EXPOSED METAL SHOWN
SCALE: 10X

NON-SOLDER MASK DEFINED (PREFERRED)

SOLDER MASK DEFINED

SOLDER MASK DETAILS

4220204/B 12/2023

NOTES: (continued)

6. Publication IPC-7351 may have alternate designs.
7. Solder mask tolerances between and around signal pads can vary based on board fabrication site.

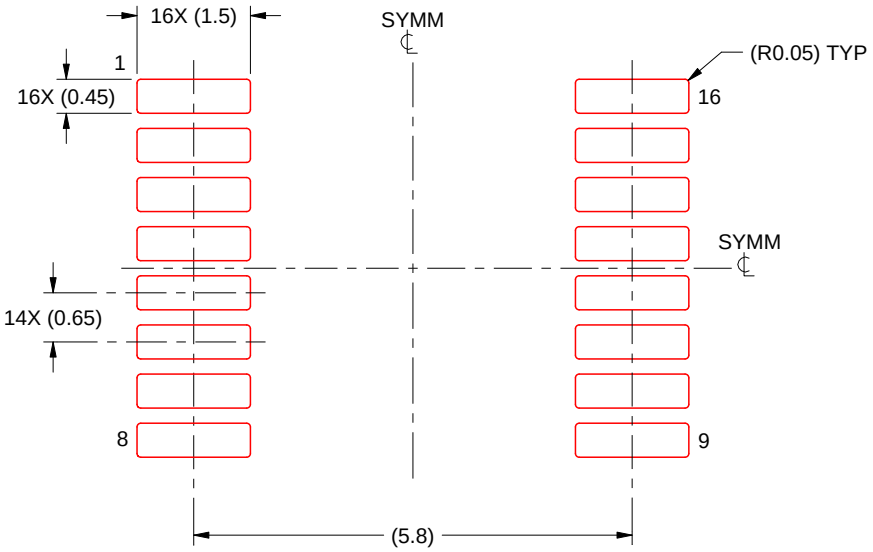

SOLDER PASTE EXAMPLE
BASED ON 0.125 mm THICK STENCIL
SCALE: 10X

4220204/B 12/2023

NOTES: (continued)

8. Laser cutting apertures with trapezoidal walls and rounded corners may offer better paste release. IPC-7525 may have alternate design recommendations.
9. Board assembly site may have different recommendations for stencil design.

GENERIC PACKAGE VIEW

DW 16

SOIC - 2.65 mm max height

7.5 x 10.3, 1.27 mm pitch

SMALL OUTLINE INTEGRATED CIRCUIT

This image is a representation of the package family, actual package may vary.
Refer to the product data sheet for package details.

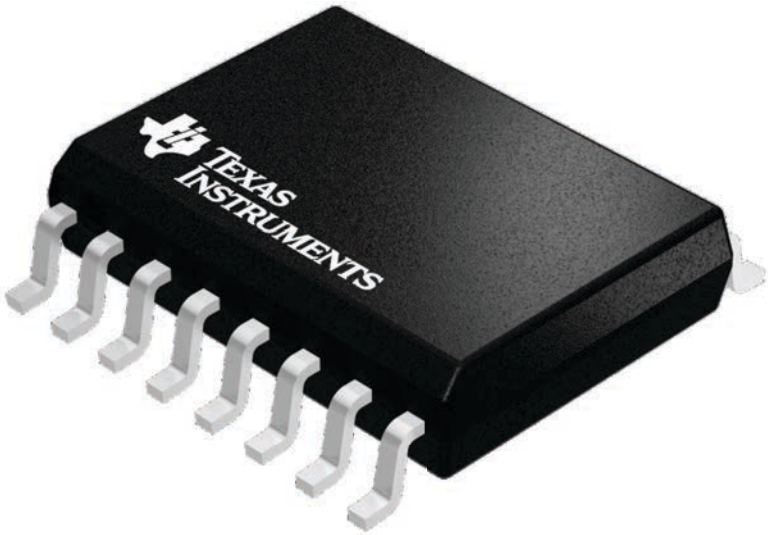

4224780/A

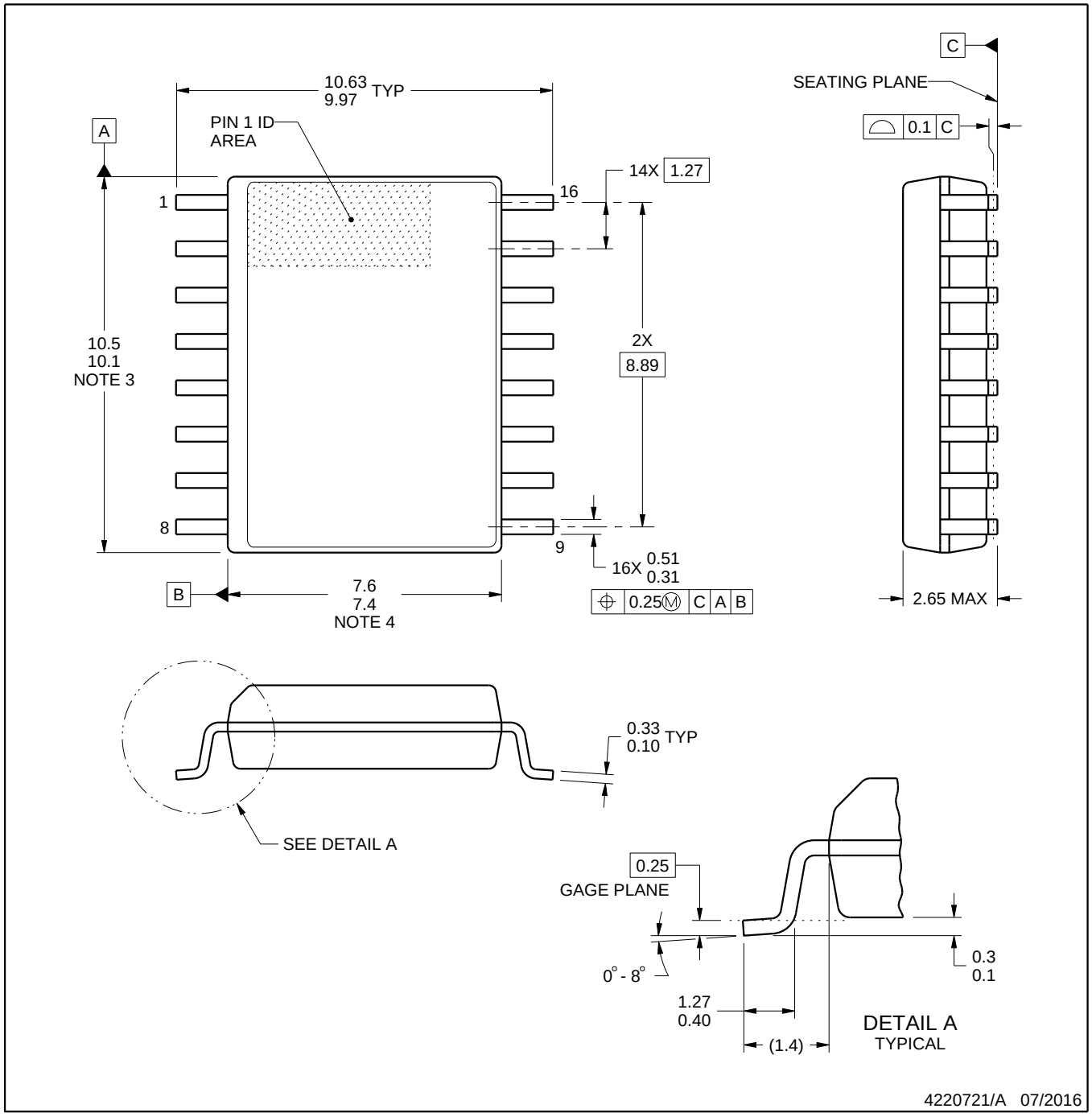

NOTES:

1. All linear dimensions are in millimeters. Dimensions in parenthesis are for reference only. Dimensioning and tolerancing per ASME Y14.5M.
2. This drawing is subject to change without notice.
3. This dimension does not include mold flash, protrusions, or gate burrs. Mold flash, protrusions, or gate burrs shall not exceed 0.15 mm, per side.
4. This dimension does not include interlead flash. Interlead flash shall not exceed 0.25 mm, per side.
5. Reference JEDEC registration MS-013.

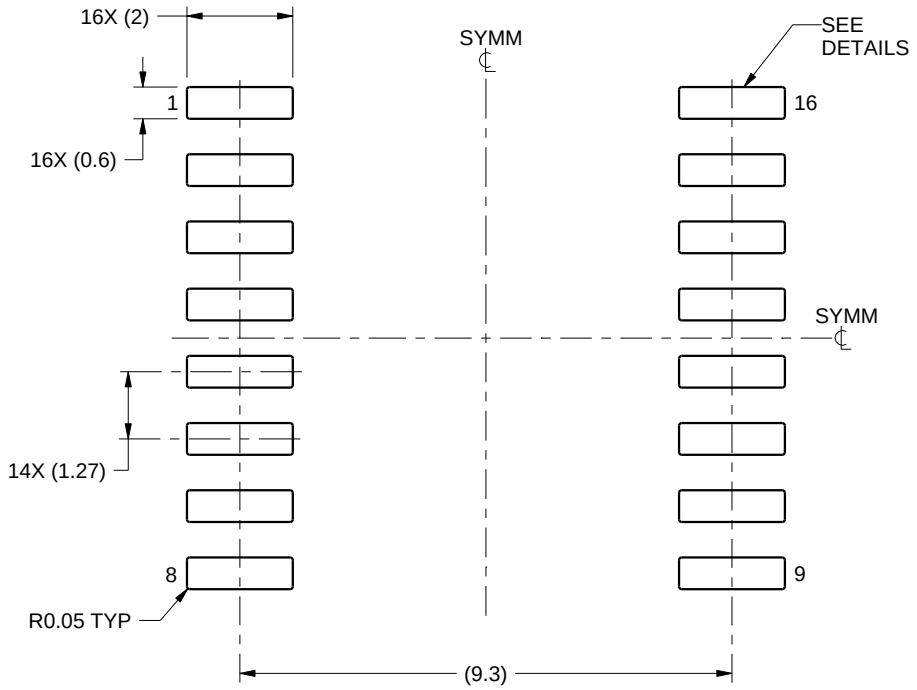

LAND PATTERN EXAMPLE
SCALE:7X

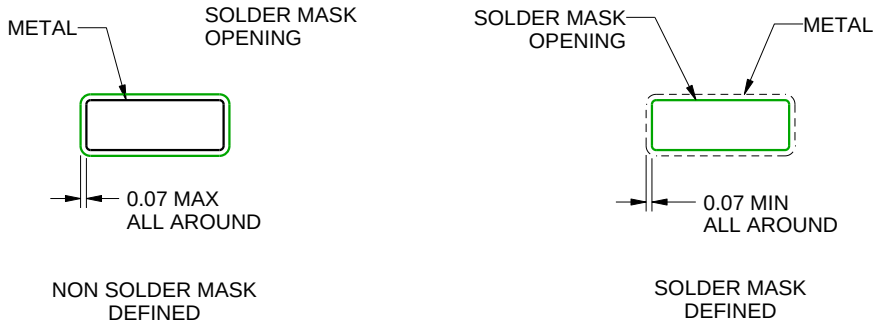

SOLDER MASK DETAILS

4220721/A 07/2016

NOTES: (continued)

6. Publication IPC-7351 may have alternate designs.
7. Solder mask tolerances between and around signal pads can vary based on board fabrication site.

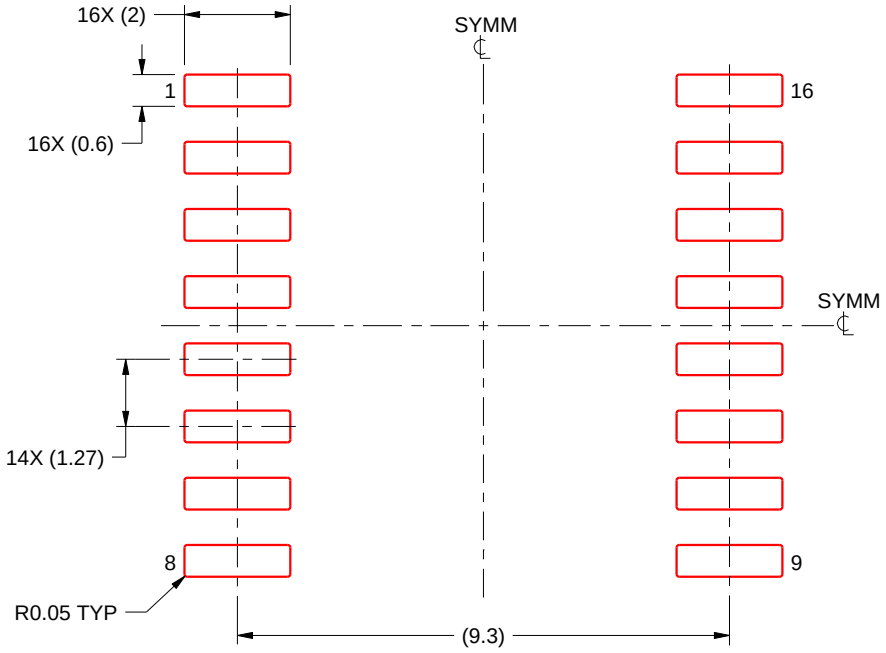

SOLDER PASTE EXAMPLE
BASED ON 0.125 mm THICK STENCIL
SCALE:7X

4220721/A 07/2016

NOTES: (continued)

8. Laser cutting apertures with trapezoidal walls and rounded corners may offer better paste release. IPC-7525 may have alternate design recommendations.
9. Board assembly site may have different recommendations for stencil design.

重要なお知らせと免責事項

TI は、技術データと信頼性データ (データシートを含みます)、設計リソース (リファレンス デザインを含みます)、アプリケーションや設計に関する各種アドバイス、Web ツール、安全性情報、その他のリソースを、欠陥が存在する可能性のある「現状のまま」提供しており、商品性および特定目的に対する適合性の黙示保証、第三者の知的財産権の非侵害保証を含むいかなる保証も、明示的または黙示的にかかわらず拒否します。

これらのリソースは、TI 製品を使用する設計の経験を積んだ開発者への提供を意図したものです。(1) お客様のアプリケーションに適した TI 製品の選定、(2) お客様のアプリケーションの設計、検証、試験、(3) お客様のアプリケーションに該当する各種規格や、その他のあらゆる安全性、セキュリティ、規制、または他の要件への確実な適合に関する責任を、お客様のみが単独で負うものとします。

上記の各種リソースは、予告なく変更される可能性があります。これらのリソースは、リソースで説明されている TI 製品を使用するアプリケーションの開発の目的でのみ、TI はその使用をお客様に許諾します。これらのリソースに関して、他の目的で複製することや掲載することは禁止されています。TI や第三者の知的財産権のライセンスが付与されている訳ではありません。お客様は、これらのリソースを自身で使用した結果発生するあらゆる申し立て、損害、費用、損失、責任について、TI およびその代理人を完全に補償するものとし、TI は一切の責任を拒否します。

TI の製品は、 TI の販売条件 、 TI の総合的な品質ガイドライン 、 ti.com または TI 製品などに関連して提供される他の適用条件に従い提供されます。TI がこれらのリソースを提供することは、適用される TI の保証または他の保証の放棄の拡大や変更を意味するものではありません。 TI がカスタム、またはカスタマー仕様として明示的に指定していない限り、TI の製品は標準的なカタログに掲載される汎用機器です。

お客様がいかなる追加条項または代替条項を提案する場合も、TI はそれらに異議を唱え、拒否します。

Copyright © 2026, Texas Instruments Incorporated

最終更新日：2025 年 10 月