OP07x 高精度オペアンプ

1 特長

- 低ノイズ
- 外付け部品不要
- 低コストでチョッパー・アンプを置き換え
- 幅広い入力電圧範囲:
  0V～±14V (通常は ±15V 電源)
- 幅広い供給電圧範囲:±3V～±18V

2 アプリケーション

- アナログ入力モジュール
- バッテリ試験装置
- 実験室およびフィールド計測
- 温度トランスミッタ
- 商用ネットワークおよびサーバーの PSU (電源)

3 説明

OP07C および OP07D (OP07x) デバイスは、低ノイズ、チョッパーレス、バイポーラ入力トランジスタを特徴とするアンプ回路により、低オフセットと長期安定性を実現します。ほとんどのアプリケーションでは、オフセット・ヌリング周波数補償のための外付け部品は必要ありません。入力電圧範囲が広く、同相信号除去が非常に優れた完全な差動入力により、ノイズの多い環境や非反転アプリケーションで最大の柔軟性と性能を実現します。温度範囲全体にわたって、低いバイアス電流と非常に高い入力インピーダンスが維持されます。

性能の向上と幅広い温度範囲については、低消費電力の次世代 OPA207 と、大きい容量性負荷ドライブ能力を持つ OPA202 をご覧ください。

パッケージ情報

部品番号	パッケージ(1)	本体サイズ (公称)
OP07C、OP07D	D (SOIC、8)	4.90mm × 3.91mm
	P (PDIP、8)	9.81mm × 6.35mm
	PS (SO、8)	6.20mm × 5.30mm

(1) 利用可能なパッケージと OP07 については、このデータシートの末尾にある注文情報を参照してください。

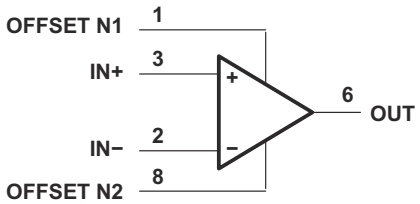

簡略回路図

英語版の TI 製品についての情報を翻訳したこの資料は、製品の概要を確認する目的で便宜的に提供しているものです。該当する正式な英語版の最新情報は、www.ti.com で閲覧でき、その内容が常に優先されます。TI では翻訳の正確性および妥当性につきましては一切保証いたしません。実際の設計などの前には、必ず最新版の英語版をご参照くださいますようお願いいたします。

Table of Contents

1 特長 ... 1
2 アプリケーション ... 1
3 説明 ... 1
4 Revision History ... 2
5 Pin Configuration and Functions ... 3
6 Specifications ... 4
6.1 Absolute Maximum Ratings ... 4
6.2 ESD Ratings ... 4
6.3 Recommended Operating Conditions ... 4
6.4 Thermal Information ... 4
6.5 Electrical Characteristics ... 5
6.6 Typical Characteristics ... 7
7 Detailed Description ... 8
7.1 Overview ... 8
7.2 Functional Block Diagram ... 8
7.3 Feature Description ... 8
7.4 Device Functional Modes ... 8
8 Application and Implementation ... 9
8.1 Application Information ... 9
8.2 Typical Application ... 9
8.3 Power Supply Recommendations ... 10
8.4 Layout ... 12
9 Device and Documentation Support ... 13
9.1 ドキュメントの更新通知を受け取る方法 ... 13
9.2 サポート・リソース ... 13
9.3 Trademarks ... 13
9.4 静電気放電に関する注意事項 ... 13
9.5 用語集 ... 13
10 Mechanical, Packaging, and Orderable Information ... 13

4 Revision History

資料番号末尾の英字は改訂を表しています。その改訂履歴は英語版に準じています。

Changes from Revision G (November 2014) to Revision H (July 2022) — **Page**

- 「特長」の「幅広い入力電圧範囲」の箇条書き項目に電源条件を追加 ... 1
- Changed VCC_+ to V+ and VCC_- to V− ... 3
- Changed supply voltage abbreviation from VCC+ and VCC– to V_S in *Absolute Maximum Ratings* and throughout the data sheet ... 4
- Changed note 5 in *Absolute Maximum Ratings* to include a note that fast-ramping shorts to the positive supply can damage the device ... 4
- Changed Electrostatic discharge Human-body model and Charged-device model from 1000 V to ±1000 V ... 4
- Added new values to *Thermal Information* ... 4
- Changed *Electrical Characteristics* format ... 5
- Changed parameter name from supply-voltage sensitivity to power supply rejection ratio in *Electrical Characteristics* ... 5
- Changed parameter name from input offset voltage to Input voltage noise density in *Electrical Characteristics* ... 5
- Changed input current noise density unit from nV/√Hz to pA/√Hz in *Electrical Characteristics* ... 5
- Changed parameter name from large-signal differential voltage gain to open-loop voltage gain in *Electrical Characteristics* ... 5
- Changed parameter name from peak output voltage to voltage output swing in Electrical Characteristics ... 5
- Changed functional block diagram ... 8
- Changed text to clarify how to adjust input mismatches using null pins in *Application Information* ... 9

Changes from Revision F (January 2014) to Revision G (November 2014) — **Page**

- 「アプリケーション」セクション、「製品情報」表、「ピン機能」表、「取り扱いに関する定格」表、「熱に関する情報」表、「代表的特性」セクション、「機能説明」セクション、「デバイスの機能モード」セクション、「アプリケーションと実装」セクション、「電源に関する推奨事項」セクション、「レイアウト」セクション、「デバイスおよびドキュメントのサポート」セクション、「メカニカル、パッケージ、および注文情報」セクションを追加 ... 1

Changes from Revision E (May 2004) to Revision F (January 2014) — **Page**

- 「注文情報」表を削除 ... 1

Copyright © 2023 Texas Instruments Incorporated

5 Pin Configuration and Functions

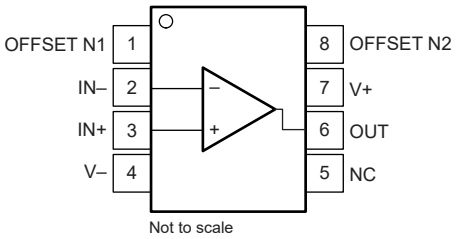

図 5-1. D Package, 8-Pin SOIC, P Package, 8-Pin PDIP, and PS Package, 8-Pin SO (Top View)

表 5-1. Pin Functions

PIN		TYPE	DESCRIPTION
NAME	NO.		
IN+	3	Input	Noninverting input
IN–	2	Input	Inverting input
NC	5	—	Do not connect
OFFSET N1	1	Input	External input offset voltage adjustment
OFFSET N2	8	Input	External input offset voltage adjustment
OUT	6	Output	Output
V+	7	—	Positive supply
V–	4	—	Negative supply

Copyright © 2023 Texas Instruments Incorporated

6 Specifications

6.1 Absolute Maximum Ratings

over operating free-air temperature range (unless otherwise noted) (1)

			MIN	MAX	UNIT
V_S	Supply voltage((2))	Single supply		44	V
		Dual supply		±22	
	Input voltage	Differential(3)		±30	V
		Single-ended(4)		±22	
	Output short-circuit(5)		Continous		
T_J	Operating junction temperature		–55	150	°C
T_{stg}	Storage temperature		–65	150	°C

(1) Stresses beyond those listed under *Absolute Maximum Ratings* may cause permanent damage to the device. These are stress ratings only, which do not imply functional operation of the device at these or any other conditions beyond those indicated under *Recommended Operating Conditions*. Exposure to absolute-maximum-rated conditions for extended periods may affect device reliability.
(2) All voltage values, unless otherwise noted, are with respect to the midpoint between V+ and V−.
(3) Differential voltages are at IN+ with respect to IN−.
(4) The magnitude of the input voltage must never exceed the magnitude of the supply voltage or 15 V, whichever is less.
(5) The output can be shorted to ground or to the negative power supply. Fast ramping shorts to the positive supply can cause permanent damage and eventual destruction.

6.2 ESD Ratings

			VALUE	UNIT
$V_{(ESD)}$	Electrostatic discharge	Human-body model (HBM), per ANSI/ESDA/JEDEC JS-001(1)	±1000	V
		Charged-device model (CDM), per JEDEC specification JESD22-C101(2)	±1000	

(1) JEDEC document JEP155 states that 500-V HBM allows safe manufacturing with a standard ESD control process.
(2) JEDEC document JEP157 states that 250-V CDM allows safe manufacturing with a standard ESD control process.

6.3 Recommended Operating Conditions

over operating free-air temperature range (unless otherwise noted)

			MIN	NOM	MAX	UNIT
V_S	Supply voltage	Single supply	6		36	V
		Dual supply	±3		±18	
V_{CM}	Common-mode input voltage	V_S = ±15 V	–13		13	V
T_A	Operating ambient temperature		0		70	°C

6.4 Thermal Information

THERMAL METRIC(1)		OP07x		UNIT
		D (SOIC)	P (PDIP)	
		8 PINS	8 PINS	
$R_{\theta JA}$	Junction-to-ambient thermal resistance	127.6	85	°C/W
$R_{\theta JC(top)}$	Junction-to-case (top) thermal resistance	67.1	68.6	°C/W
$R_{\theta JB}$	Junction-to-board thermal resistance	71.4	55..6	°C/W
ψ_{JT}	Junction-to-top characterization parameter	18.7	38.3	°C/W
ψ_{JB}	Junction-to-board characterization parameter	70.6	55.2	°C/W
$R_{\theta JC(bot)}$	Junction-to-case (bottom) thermal resistance	—	—	°C/W

(1) For more information about traditional and new thermal metrics, see the Semiconductor and IC Package Thermal Metrics application report.

Copyright © 2023 Texas Instruments Incorporated

6.5 Electrical Characteristics

at T_A = 25°C, V_S = ±15 V, R_L = 2 kΩ connected to mid-supply, and V_{CM} = V_{OUT} = mid-supply (unless otherwise noted)(1).

PARAMETER		TEST CONDITIONS		MIN	TYP	MAX	UNIT
OFFSET VOLTAGE							
V_{OS}	Input offset voltage	OP07C			±60		µV
			T_A = 0°C to 70°C		±85		
		OP07D				±150	
			T_A = 0°C to 70°C			±250	
dV_{OS}/dT	Input offset voltage drift	T_A = 0°C to 70°C	OP07C		±0.5		µV/°C
			OP07D			±2.5	
	Long-term drift of input offset voltage(2)				±0.4		µV/mo
	Offset adjustment range	R_s = 20 kΩ, see セクション 8.1			±4		mV
PSRR	Power supply rejection ratio	V_S = ±3 V to ±18 V			7	32	µV/V
			T_A = 0°C to 70°C		10	51	
INPUT BIAS CURRENT							
I_B	Input bias current	OP07C			±1.8		nA
			T_A = 0°C to 70°C		±2.2		
		OP07D				±12	
			T_A = 0°C to 70°C			±14	
	Input bias current drift	OP07C			±18		pA/°C
		OP07D				±50	
I_{OS}	Input offset current	OP07C			±0.8		nA
			T_A = 0°C to 70°C		±1.6		
		OP07D				±6	
			T_A = 0°C to 70°C			±8	
	Input offset current drift	OP07C			12		pA/°C
		OP07D				±50	
NOISE							
	Input voltage noise	f = 0.1 Hz to 10 Hz			0.38		$µV_{PP}$
e_N	Input voltage noise density	f = 10 Hz			10.5		$nV/\sqrt{Hz}$
		f = 100 Hz			10.2		
		f = 1 kHz			9.8		
	Input current noise	f = 0.1 Hz to 10 Hz			15		pA_{pp}
i_N	Input current noise density	f = 10 Hz			0.35		$pA/\sqrt{Hz}$
		f = 100 Hz			0.15		
		f = 1 kHz			0.13		
INPUT VOLTAGE RANGE							
V_{CM}	Common-mode voltage			±13	±14		V
		T_A = 0°C to 70°C		±13	±13.5		
CMRR	Common-mode rejection ratio	OP07C V_{CM} = ±13 V		100	120		dB
			T_A = 0°C to 70°C	97	120		
		OP07D V_{CM} = ±13 V		94	110		
			T_A = 0°C to 70°C	94	106		
INPUT CAPACITANCE							
r_I	Input resistance			7	33		MΩ
OPEN-LOOP GAIN							

Copyright © 2023 Texas Instruments Incorporated

6.5 Electrical Characteristics (continued)

at T_A = 25°C, V_S = ±15 V, R_L = 2 kΩ connected to mid-supply, and V_{CM} = V_{OUT} = mid-supply (unless otherwise noted)[1].

PARAMETER		TEST CONDITIONS		MIN	TYP	MAX	UNIT
A_{OL}	Open-loop voltage gain	1.4 V < V_O < 11.4 V, R_L = 500 kΩ	OP07C	100	400		V/mV
			OP07D		400		
		V_O = ±10 V		120	400		
			T_A = –40°C to +125°C	100	400		

Copyright © 2023 Texas Instruments Incorporated

6.5 Electrical Characteristics (continued)

at T_A = 25°C, V_S = ±15 V, R_L = 2 kΩ connected to mid-supply, and V_{CM} = V_{OUT} = mid-supply (unless otherwise noted)(1).

PARAMETER		TEST CONDITIONS	MIN	TYP	MAX	UNIT
FREQUENCY RESPONSE						
	Unity gain bandwidth		0.4	0.6		MHz
SR	Slew rate	V_S = 5 V, R_L = 2 kΩ		0.3		V/µs
OUTPUT						
	Voltage output swing		±11.5	±12.8		V
		T_A = 0°C to 70°C	±11	±12.6		
		R_L = 10 kΩ	±12	±13		
		R_L = 1 kΩ		±12		
POWER SUPPLY						
P_D	Power dissipation	No load		80	150	mW
		V_S = ±3 V, no load		4	8	

(1) The specifications listed in the *Electrical Characteristics* apply to OP07C and OP07D.
(2) Because long-term drift cannot be measured on the individual devices before shipment, this specification is not intended to be a warranty. This specification is an engineering estimate of the averaged trend line of drift versus time over extended periods after the first 30 days of operation.

6.6 Typical Characteristics

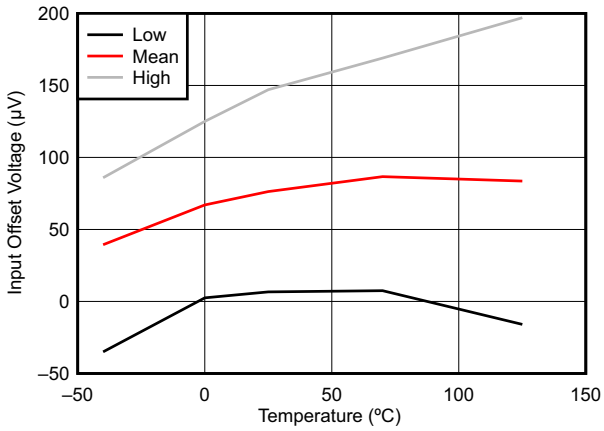

図 6-1. Input-Offset Voltage vs Temperature

7 Detailed Description

7.1 Overview

These devices offer low offset and long-term stability by means of a low-noise, chopperless, bipolar-input-transistor amplifier circuit. For most applications, external components are not required for offset nulling and frequency compensation. The true differential input, with a wide input-voltage range and outstanding common-mode rejection, provides maximum flexibility and performance in high-noise environments and in noninverting applications. Low bias currents and extremely high input impedances are maintained over the entire temperature range.

These devices are characterized for operation from 0°C to 70°C.

7.2 Functional Block Diagram

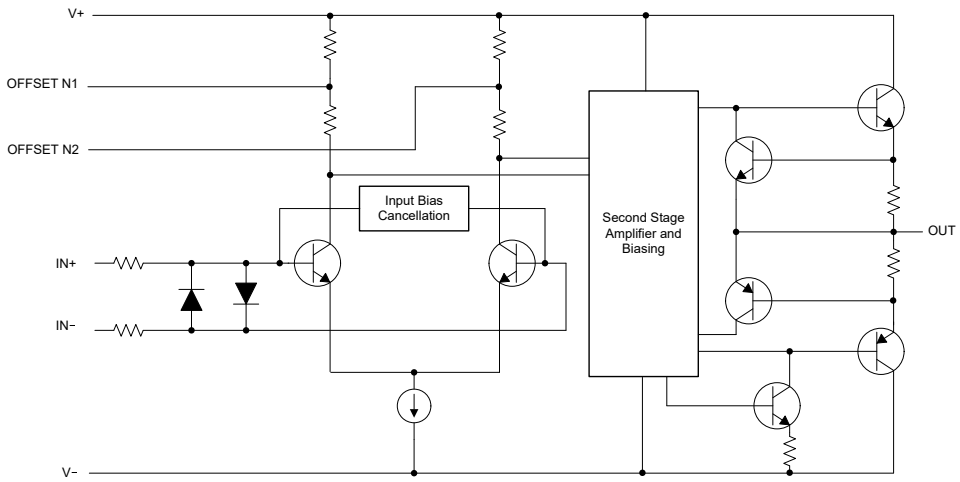

7.3 Feature Description

7.3.1 Offset-Voltage Null Capability

The input offset voltage of operational amplifiers (op amps) arises from unavoidable mismatches in the differential input stage of the op-amp circuit caused by mismatched transistor pairs, collector currents, current-gain betas (β), collector or emitter resistors, and so on. The input offset pins allow the designer to adjust for these mismatches by external circuitry. See *セクション 8* for more details on design techniques.

7.3.2 Slew Rate

The slew rate is the rate at which an operational amplifier can change the output when there is a change on the input. The OP07x have a 0.3-V/µs slew rate.

7.4 Device Functional Modes

The OP07x are powered on when the supply is connected. The devices can be operated as single-supply operational amplifiers or dual-supply amplifiers, depending on the application.

Copyright © 2023 Texas Instruments Incorporated

8 Application and Implementation

注

以下のアプリケーション情報は、TI の製品仕様に含まれるものではなく、TI ではその正確性または完全性を保証いたしません。個々の目的に対する製品の適合性については、お客様の責任で判断していただくことになります。お客様は自身の設計実装を検証しテストすることで、システムの機能を確認する必要があります。

8.1 Application Information

The input offset voltage of operational amplifiers (op amps) arises from unavoidable mismatches in the differential input stage of the op-amp circuit caused by mismatched transistor pairs, collector currents, current-gain betas (β), collector or emitter resistors, and so on. The input offset pins allow the designer to adjust for these mismatches with external circuitry. 図 8-1 shows how these input mismatches can be adjusted by putting resistors or a potentiometer between the null pins. Use a potentiometer to fine tune the circuit during testing or for applications that require precision offset control. For more information about designing using the input-offset pins, see the *Nulling Input Offset Voltage of Operational Amplifiers* application report.

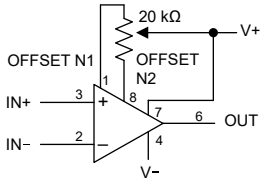

図 8-1. Input Offset-Voltage Null Circuit

8.2 Typical Application

The voltage follower configuration of the operational amplifier is used for applications where a weak signal is used to drive a relatively high current load. This circuit is also called a buffer amplifier or unity gain amplifier. The inputs of an operational amplifier have a very high resistance that puts a negligible current load on the voltage source. The output resistance of the operational amplifier is almost negligible, so the amplifier can provide as much current as necessary to the output load.

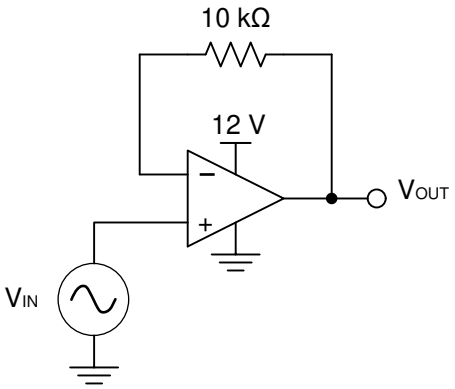

図 8-2. Voltage Follower Schematic

8.2.1 Design Requirements

- Output range of 2 V to 11 V
- Input range of 2 V to 11 V

Copyright © 2023 Texas Instruments Incorporated

8.2.2 Detailed Design Procedure

8.2.2.1 Output Voltage Swing

The output voltage of an operational amplifier is limited by the internal circuitry to some level less than the supply rails. For this amplifier, the output voltage swing is within ±12 V, which accommodates the input and output voltage requirements.

8.2.2.2 Supply and Input Voltage

For correct operation of the amplifier, neither input must be higher than the recommended positive supply rail voltage or lower than the recommended negative supply rail voltage. The chosen amplifier must be able to operate at the supply voltage that accommodates the inputs. Because the input for this application goes up to 11 V, the supply voltage must be 12 V. Using a negative voltage on the lower rail, rather than ground, allows the amplifier to maintain linearity for inputs below 2 V.

8.2.3 Application Curves

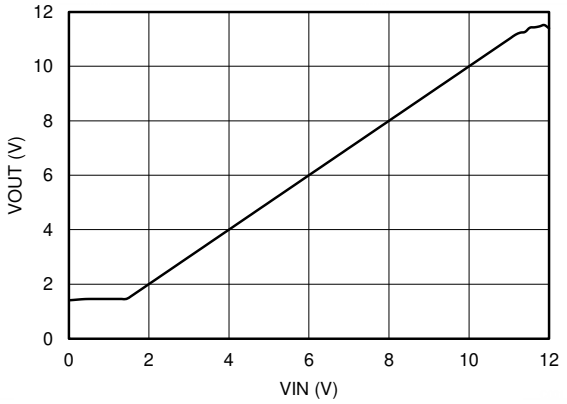

図 8-3. Output Voltage vs Input Voltage

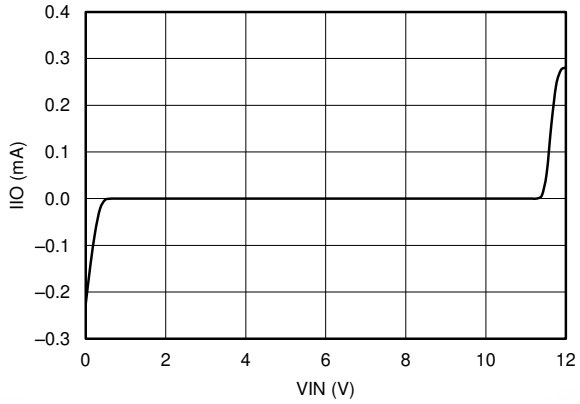

図 8-4. Current Drawn by the Input of the Voltage Follower (I_{IO}) vs Input Voltage

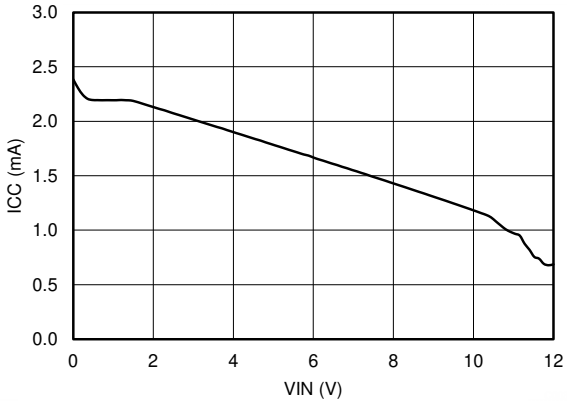

図 8-5. Current Drawn from Supply (I_{CC}) vs Input Voltage

8.3 Power Supply Recommendations

The OP07x operate from ±3 V to ±18 V supplies; many specifications apply from 0°C to 70°C.

> **注意**
>
> Supply voltages larger than ±22 V can permanently damage the device. See also セクション *6.1*.

Copyright © 2023 Texas Instruments Incorporated

Place 0.1-µF bypass capacitors close to the power-supply pins to reduce errors coupling in from noisy or high-impedance power supplies. For more details on bypass capacitor placement, see *セクション 8.4.1*.

Copyright © 2023 Texas Instruments Incorporated

8.4 Layout

8.4.1 Layout Guidelines

For best operational performance of the device, use good PCB layout practices, including:

- Noise can propagate into analog circuitry through the power pins of the circuit as a whole, as well as the operational amplifier. Bypass capacitors are used to reduce the coupled noise by providing low-impedance power sources local to the analog circuitry.
  - Connect low-ESR, 0.1-µF ceramic bypass capacitors between each supply pin and ground, placed as close to the device as possible. A single bypass capacitor from V+ to ground is applicable for single supply applications.
- Separate grounding for analog and digital portions of circuitry is one of the simplest and most-effective methods of noise suppression. On multilayer PCBs, one or more layers are usually devoted to ground planes. A ground plane helps distribute heat and reduces EMI noise pickup. Make sure to physically separate digital and analog grounds, paying attention to the flow of the ground current.
- To reduce parasitic coupling, run the input traces as far away from the supply or output traces as possible. If it is not possible to keep them separate, it is much better to cross the sensitive trace perpendicularly, as opposed to in parallel, with the noisy trace.
- Place the external components as close to the device as possible. Keeping RF and RG close to the inverting input minimizes parasitic capacitance, as shown in *セクション 8.4.2*.
- Keep the length of input traces as short as possible. Always remember that the input traces are the most sensitive part of the circuit.
- Consider a driven, low-impedance guard ring around the critical traces. A guard ring can significantly reduce leakage currents from nearby traces that are at different potentials.

8.4.2 Layout Example

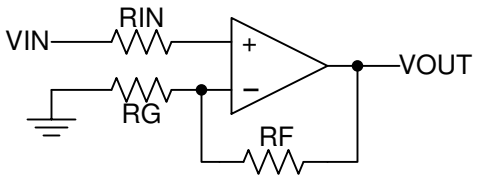

図 8-6. Operational Amplifier Schematic for Noninverting Configuration

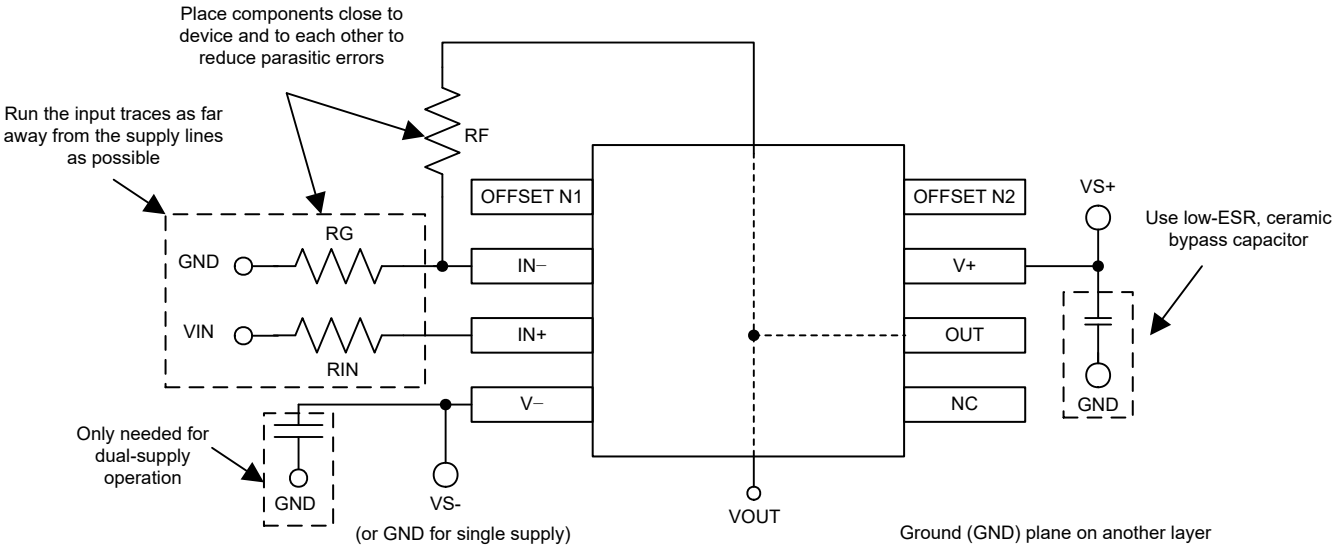

図 8-7. Operational Amplifier Board Layout for Noninverting Configuration

Copyright © 2023 Texas Instruments Incorporated

9 Device and Documentation Support

9.1 ドキュメントの更新通知を受け取る方法

ドキュメントの更新についての通知を受け取るには、ti.com のデバイス製品フォルダを開いてください。「更新の通知を受け取る」をクリックして登録すると、変更されたすべての製品情報に関するダイジェストを毎週受け取れます。変更の詳細については、修正されたドキュメントに含まれている改訂履歴をご覧ください。

9.2 サポート・リソース

TI E2E™ サポート・フォーラムは、エンジニアが検証済みの回答と設計に関するヒントをエキスパートから迅速かつ直接得ることができる場所です。既存の回答を検索したり、独自の質問をしたりすることで、設計で必要な支援を迅速に得ることができます。

リンクされているコンテンツは、該当する貢献者により、現状のまま提供されるものです。これらは TI の仕様を構成するものではなく、必ずしも TI の見解を反映したものではありません。TI の使用条件を参照してください。

9.3 Trademarks

TI E2E™ is a trademark of Texas Instruments.
すべての商標は、それぞれの所有者に帰属します。

9.4 静電気放電に関する注意事項



この IC は、ESD によって破損する可能性があります。テキサス・インスツルメンツは、IC を取り扱う際には常に適切な注意を払うことを推奨します。正しい取り扱いおよび設置手順に従わない場合、デバイスを破損するおそれがあります。

ESD による破損は、わずかな性能低下からデバイスの完全な故障まで多岐にわたります。精密な IC の場合、パラメータがわずかに変化するだけで公表されている仕様から外れる可能性があるため、破損が発生しやすくなっています。

9.5 用語集

テキサス・インスツルメンツ用語集　　この用語集には、用語や略語の一覧および定義が記載されています。

10 Mechanical, Packaging, and Orderable Information

The following pages include mechanical packaging and orderable information. This information is the most current data available for the designated devices. This data is subject to change without notice and revision of this document. For browser based versions of this data sheet, refer to the left hand navigation.

Copyright © 2023 Texas Instruments Incorporated

PACKAGING INFORMATION

Orderable part number	Status (1)	Material type (2)	Package | Pins	Package qty | Carrier	RoHS (3)	Lead finish/ Ball material (4)	MSL rating/ Peak reflow (5)	Op temp (°C)	Part marking (6)
OP-07DP	Active	Production	PDIP (P) | 8	50 | TUBE	Yes	NIPDAU	N/A for Pkg Type	0 to 70	OP-07DP
OP-07DP.A	Active	Production	PDIP (P) | 8	50 | TUBE	Yes	NIPDAU	N/A for Pkg Type	See OP-07DP	OP-07DP
OP-07DPS	Active	Production	SO (PS) | 8	80 | TUBE	Yes	NIPDAU	Level-1-260C-UNLIM	0 to 70	OP-07D
OP-07DPS.A	Active	Production	SO (PS) | 8	80 | TUBE	Yes	NIPDAU	Level-1-260C-UNLIM	See OP-07DPS	OP-07D
OP-07DPSR	Active	Production	SO (PS) | 8	2000 | LARGE T&R	Yes	NIPDAU	Level-1-260C-UNLIM	0 to 70	OP-07D
OP-07DPSR.A	Active	Production	SO (PS) | 8	2000 | LARGE T&R	Yes	NIPDAU	Level-1-260C-UNLIM	See OP-07DPSR	OP-07D
OP07-W	Active	Production	WAFERSALE (YS) | 0	3603 | null	-	Call TI	Call TI	-	
OP07CD	Obsolete	Production	SOIC (D) | 8	-	-	Call TI	Call TI	0 to 70	OP07C
OP07CDR	Active	Production	SOIC (D) | 8	2500 | LARGE T&R	Yes	NIPDAU	Level-1-260C-UNLIM	0 to 70	OP07C
OP07CDR.A	Active	Production	SOIC (D) | 8	2500 | LARGE T&R	Yes	NIPDAU	Level-1-260C-UNLIM	See OP07CDR	OP07C
OP07CDR.B	Active	Production	SOIC (D) | 8	2500 | LARGE T&R	Yes	NIPDAU	Level-1-260C-UNLIM	See OP07CDR	OP07C
OP07CP	Active	Production	PDIP (P) | 8	50 | TUBE	Yes	NIPDAU	N/A for Pkg Type	0 to 70	OP07CP
OP07CP.A	Active	Production	PDIP (P) | 8	50 | TUBE	Yes	NIPDAU	N/A for Pkg Type	See OP07CP	OP07CP
OP07CP.B	Active	Production	PDIP (P) | 8	50 | TUBE	Yes	NIPDAU	N/A for Pkg Type	See OP07CP	OP07CP
OP07DD	Active	Production	SOIC (D) | 8	75 | TUBE	Yes	NIPDAU	Level-1-260C-UNLIM	0 to 70	OP07D
OP07DD.A	Active	Production	SOIC (D) | 8	75 | TUBE	Yes	NIPDAU	Level-1-260C-UNLIM	See OP07DD	OP07D
OP07DDR	Active	Production	SOIC (D) | 8	2500 | LARGE T&R	Yes	NIPDAU	Level-1-260C-UNLIM	0 to 70	OP07D
OP07DDR.A	Active	Production	SOIC (D) | 8	2500 | LARGE T&R	Yes	NIPDAU	Level-1-260C-UNLIM	See OP07DDR	OP07D
OP07DP	Active	Production	PDIP (P) | 8	50 | TUBE	Yes	NIPDAU	N/A for Pkg Type	0 to 70	OP07DP
OP07DP.A	Active	Production	PDIP (P) | 8	50 | TUBE	Yes	NIPDAU	N/A for Pkg Type	See OP07DP	OP07DP
OP07DPE4	Active	Production	PDIP (P) | 8	50 | TUBE	Yes	NIPDAU	N/A for Pkg Type	0 to 70	OP07DP

(1) **Status:** For more details on status, see our product life cycle.

(2) **Material type:** When designated, preproduction parts are prototypes/experimental devices, and are not yet approved or released for full production. Testing and final process, including without limitation quality assurance, reliability performance testing, and/or process qualification, may not yet be complete, and this item is subject to further changes or possible discontinuation. If available for ordering, purchases will be subject to an additional waiver at checkout, and are intended for early internal evaluation purposes only. These items are sold without warranties of any kind.

(3) **RoHS values:** Yes, No, RoHS Exempt. See the TI RoHS Statement for additional information and value definition.

(4) Lead finish/Ball material: Parts may have multiple material finish options. Finish options are separated by a vertical ruled line. Lead finish/Ball material values may wrap to two lines if the finish value exceeds the maximum column width.

(5) MSL rating/Peak reflow: The moisture sensitivity level ratings and peak solder (reflow) temperatures. In the event that a part has multiple moisture sensitivity ratings, only the lowest level per JEDEC standards is shown. Refer to the shipping label for the actual reflow temperature that will be used to mount the part to the printed circuit board.

(6) Part marking: There may be an additional marking, which relates to the logo, the lot trace code information, or the environmental category of the part.

Multiple part markings will be inside parentheses. Only one part marking contained in parentheses and separated by a "~" will appear on a part. If a line is indented then it is a continuation of the previous line and the two combined represent the entire part marking for that device.

Important Information and Disclaimer: The information provided on this page represents TI's knowledge and belief as of the date that it is provided. TI bases its knowledge and belief on information provided by third parties, and makes no representation or warranty as to the accuracy of such information. Efforts are underway to better integrate information from third parties. TI has taken and continues to take reasonable steps to provide representative and accurate information but may not have conducted destructive testing or chemical analysis on incoming materials and chemicals. TI and TI suppliers consider certain information to be proprietary, and thus CAS numbers and other limited information may not be available for release.

In no event shall TI's liability arising out of such information exceed the total purchase price of the TI part(s) at issue in this document sold by TI to Customer on an annual basis.

TAPE AND REEL INFORMATION

REEL DIMENSIONS

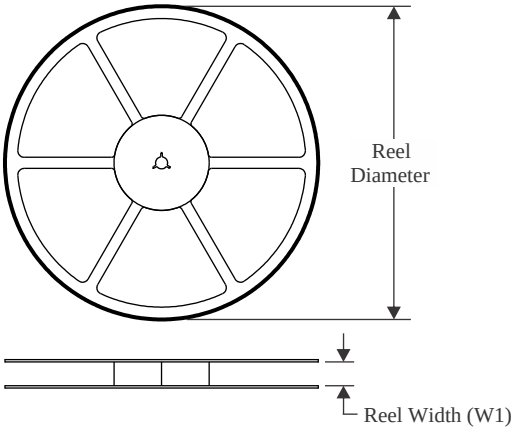

TAPE DIMENSIONS

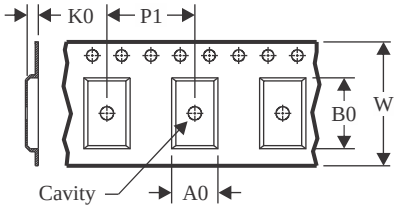

A0	Dimension designed to accommodate the component width
B0	Dimension designed to accommodate the component length
K0	Dimension designed to accommodate the component thickness
W	Overall width of the carrier tape
P1	Pitch between successive cavity centers

QUADRANT ASSIGNMENTS FOR PIN 1 ORIENTATION IN TAPE

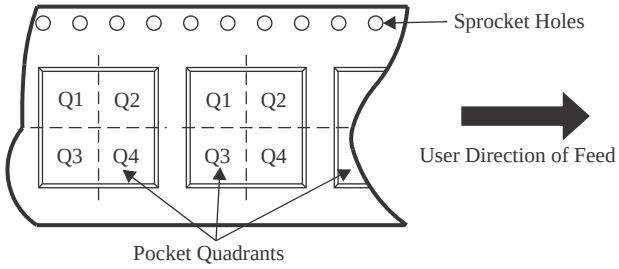

*All dimensions are nominal

Device	Package Type	Package Drawing	Pins	SPQ	Reel Diameter (mm)	Reel Width W1 (mm)	A0 (mm)	B0 (mm)	K0 (mm)	P1 (mm)	W (mm)	Pin1 Quadrant
OP-07DPSR	SO	PS	8	2000	330.0	16.4	8.35	6.6	2.4	12.0	16.0	Q1
OP07CDR	SOIC	D	8	2500	330.0	12.4	6.4	5.2	2.1	8.0	12.0	Q1
OP07CDR	SOIC	D	8	2500	330.0	12.4	6.4	5.2	2.1	8.0	12.0	Q1
OP07CDR	SOIC	D	8	2500	330.0	12.4	6.4	5.2	2.1	8.0	12.0	Q1
OP07DDR	SOIC	D	8	2500	330.0	12.4	6.4	5.2	2.1	8.0	12.0	Q1

TAPE AND REEL BOX DIMENSIONS

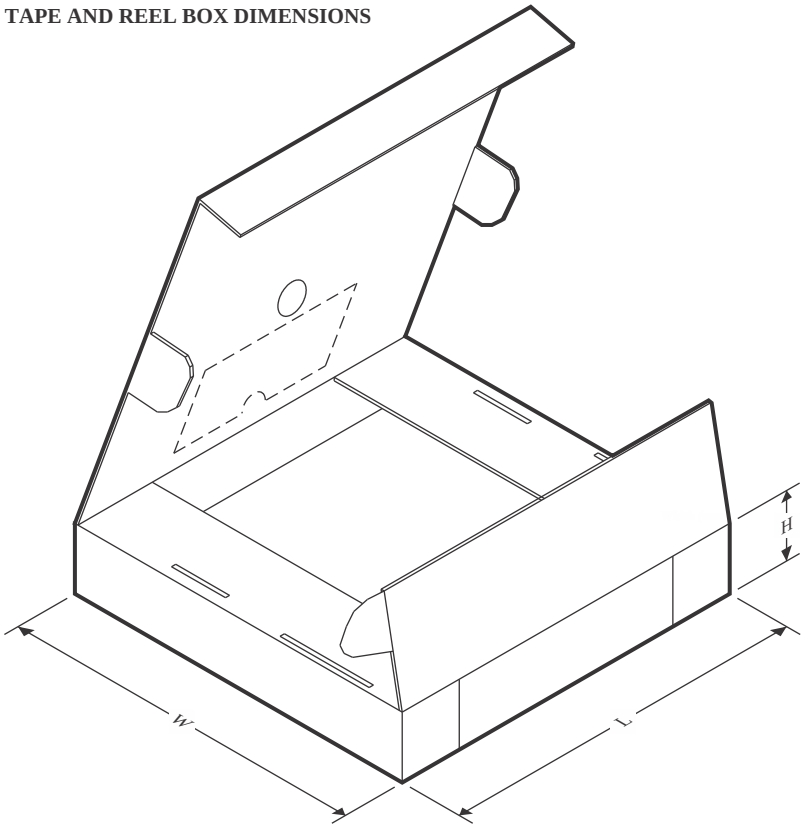

*All dimensions are nominal

Device	Package Type	Package Drawing	Pins	SPQ	Length (mm)	Width (mm)	Height (mm)
OP-07DPSR	SO	PS	8	2000	353.0	353.0	32.0
OP07CDR	SOIC	D	8	2500	353.0	353.0	32.0
OP07CDR	SOIC	D	8	2500	340.5	338.1	20.6
OP07CDR	SOIC	D	8	2500	353.0	353.0	32.0
OP07DDR	SOIC	D	8	2500	353.0	353.0	32.0

TUBE

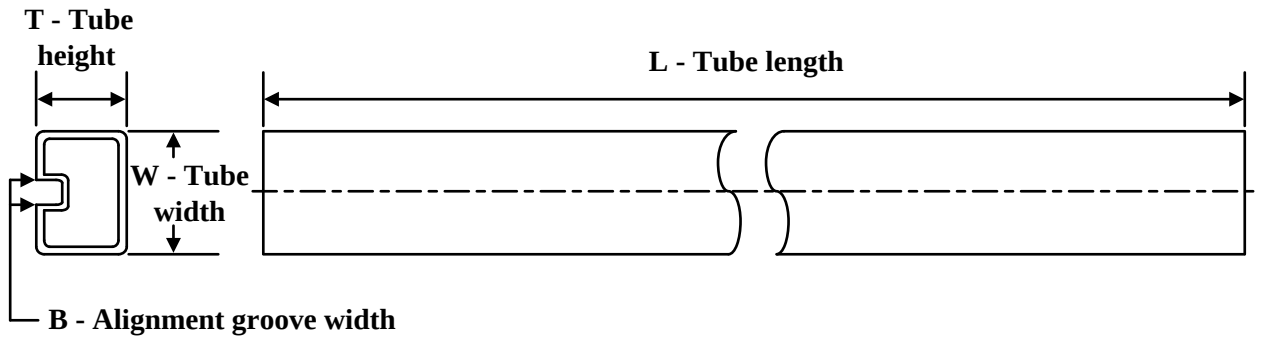

*All dimensions are nominal

Device	Package Name	Package Type	Pins	SPQ	L (mm)	W (mm)	T (µm)	B (mm)
OP-07DP	P	PDIP	8	50	506	13.97	11230	4.32
OP-07DP.A	P	PDIP	8	50	506	13.97	11230	4.32
OP-07DPS	PS	SOP	8	80	530	10.5	4000	4.1
OP-07DPS.A	PS	SOP	8	80	530	10.5	4000	4.1
OP07CP	P	PDIP	8	50	506	13.97	11230	4.32
OP07CP.A	P	PDIP	8	50	506	13.97	11230	4.32
OP07CP.B	P	PDIP	8	50	506	13.97	11230	4.32
OP07DD	D	SOIC	8	75	507	8	3940	4.32
OP07DD.A	D	SOIC	8	75	507	8	3940	4.32
OP07DP	P	PDIP	8	50	506	13.97	11230	4.32
OP07DP.A	P	PDIP	8	50	506	13.97	11230	4.32
OP07DPE4	P	PDIP	8	50	506	13.97	11230	4.32

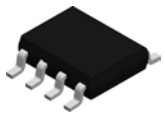

PACKAGE OUTLINE

D0008A

SOIC - 1.75 mm max height

SMALL OUTLINE INTEGRATED CIRCUIT

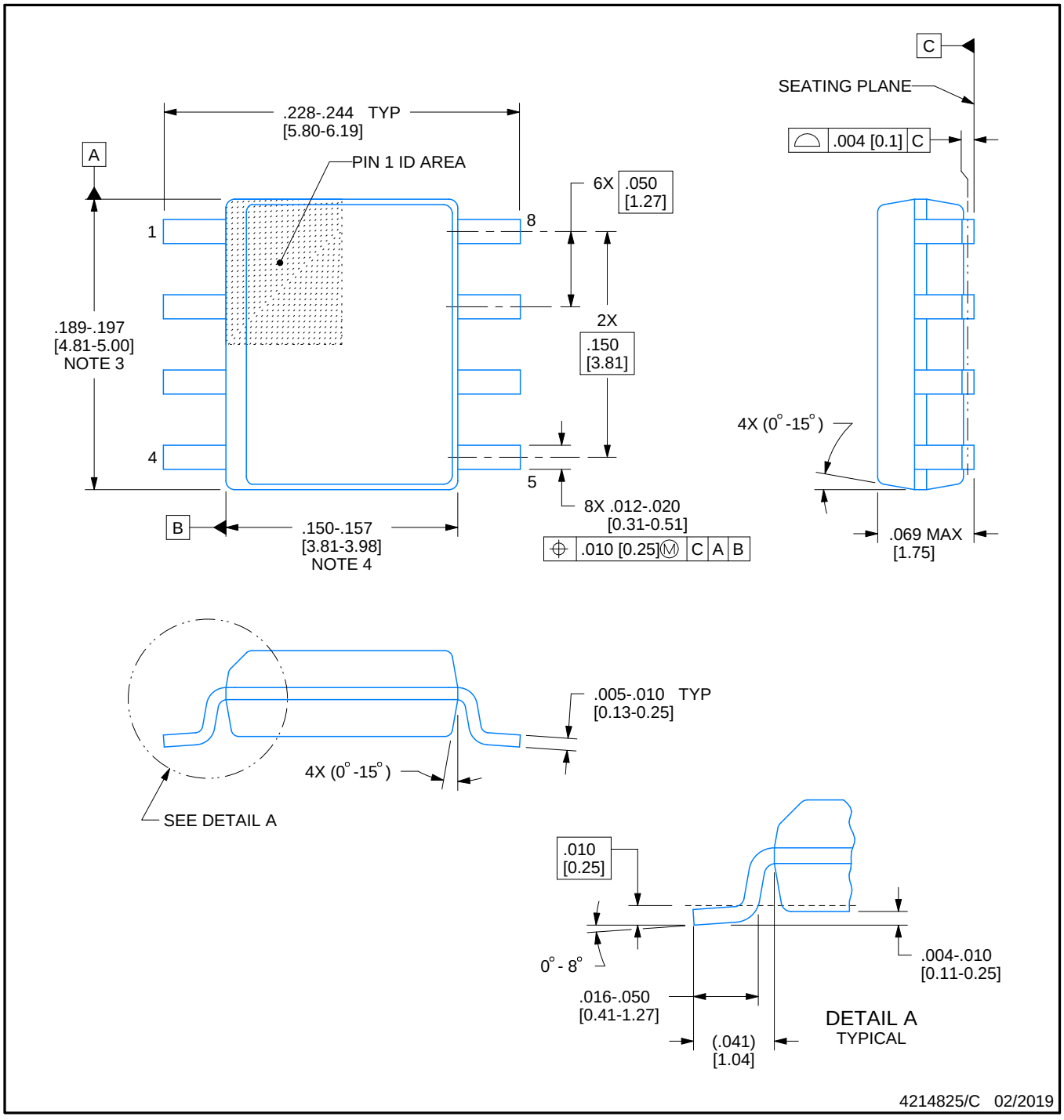

NOTES:

1. Linear dimensions are in inches [millimeters]. Dimensions in parenthesis are for reference only. Controlling dimensions are in inches. Dimensioning and tolerancing per ASME Y14.5M.
2. This drawing is subject to change without notice.
3. This dimension does not include mold flash, protrusions, or gate burrs. Mold flash, protrusions, or gate burrs shall not exceed .006 [0.15] per side.
4. This dimension does not include interlead flash.
5. Reference JEDEC registration MS-012, variation AA.

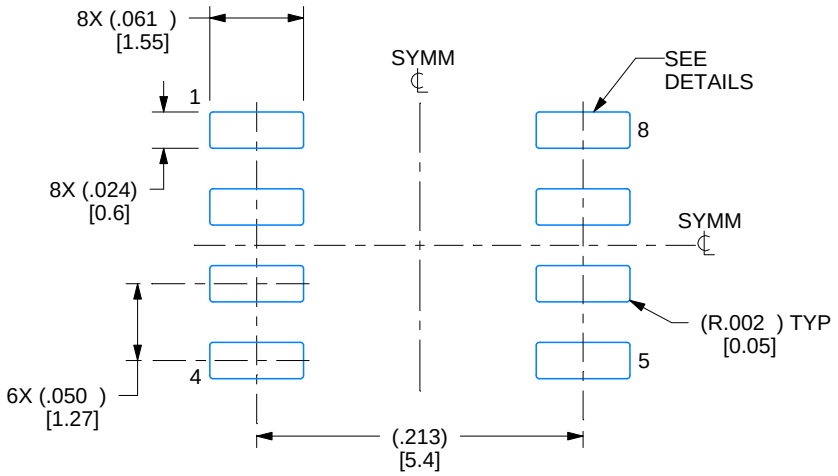

LAND PATTERN EXAMPLE
EXPOSED METAL SHOWN
SCALE:8X

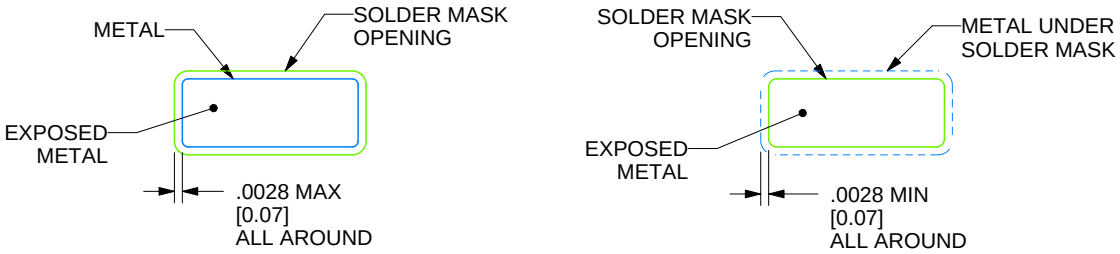

SOLDER MASK DETAILS

4214825/C 02/2019

NOTES: (continued)

6. Publication IPC-7351 may have alternate designs.
7. Solder mask tolerances between and around signal pads can vary based on board fabrication site.

EXAMPLE STENCIL DESIGN

D0008A

SOIC - 1.75 mm max height

SMALL OUTLINE INTEGRATED CIRCUIT

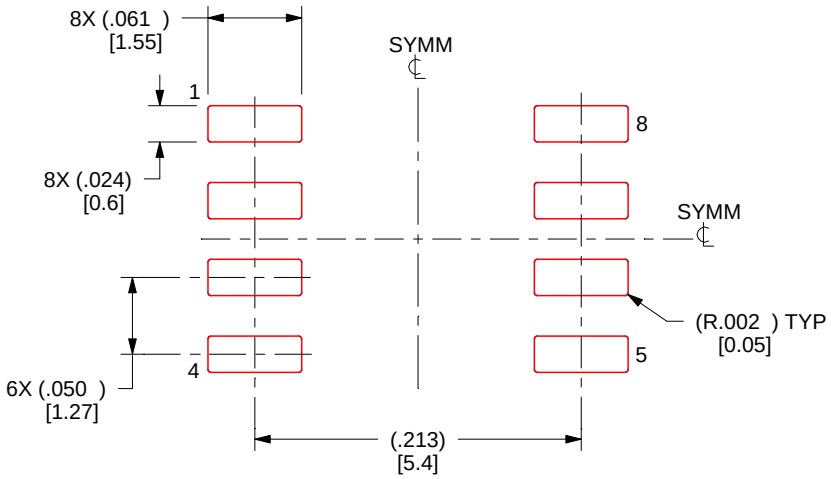

SOLDER PASTE EXAMPLE
BASED ON .005 INCH [0.125 MM] THICK STENCIL
SCALE:8X

4214825/C 02/2019

NOTES: (continued)

8. Laser cutting apertures with trapezoidal walls and rounded corners may offer better paste release. IPC-7525 may have alternate design recommendations.
9. Board assembly site may have different recommendations for stencil design.

MECHANICAL DATA

PS (R-PDSO-G8) **PLASTIC SMALL-OUTLINE PACKAGE**

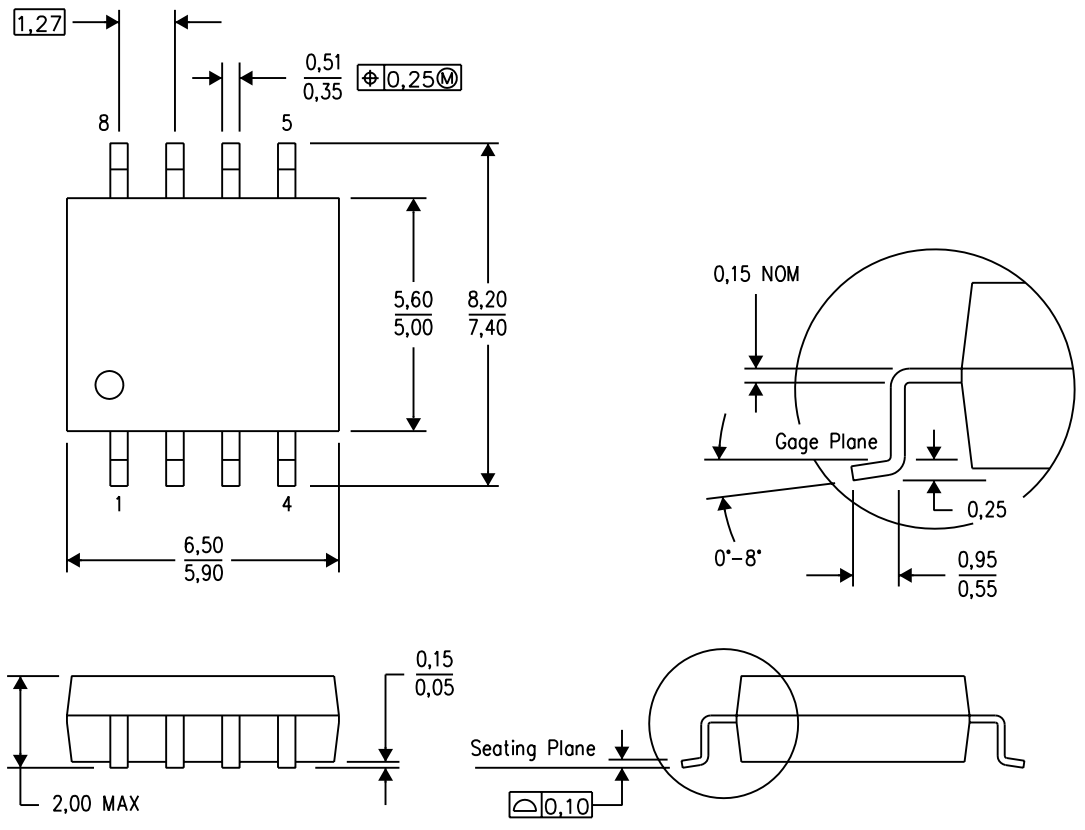

4040063/C 03/03

NOTES:
A. All linear dimensions are in millimeters.
B. This drawing is subject to change without notice.
C. Body dimensions do not include mold flash or protrusion, not to exceed 0,15.

P (R–PDIP–T8) PLASTIC DUAL–IN–LINE PACKAGE

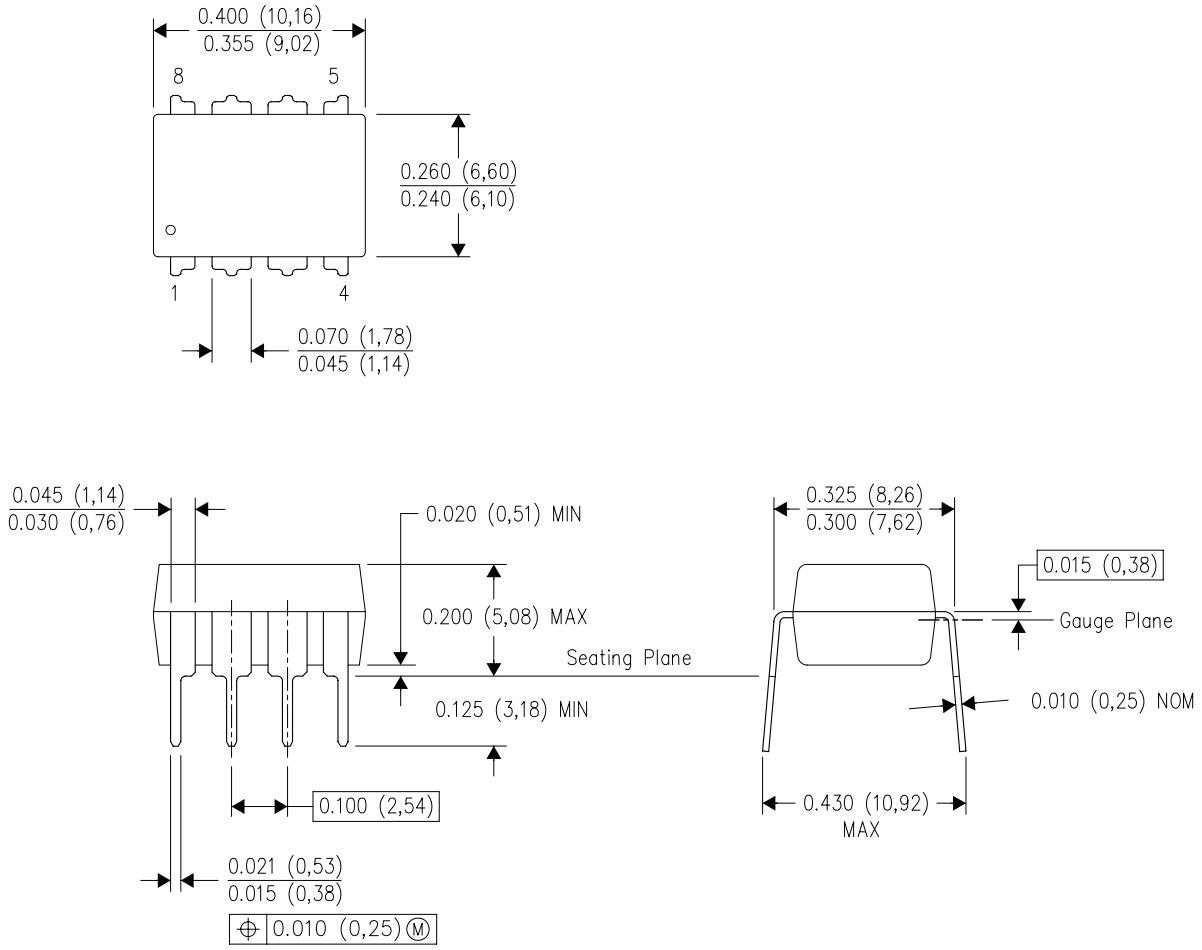

NOTES:
A. All linear dimensions are in inches (millimeters).
B. This drawing is subject to change without notice.
C. Falls within JEDEC MS–001 variation BA.

重要なお知らせと免責事項

TI は、技術データと信頼性データ (データシートを含みます)、設計リソース (リファレンス デザインを含みます)、アプリケーションや設計に関する各種アドバイス、Web ツール、安全性情報、その他のリソースを、欠陥が存在する可能性のある「現状のまま」提供しており、商品性および特定目的に対する適合性の黙示保証、第三者の知的財産権の非侵害保証を含むいかなる保証も、明示的または黙示的にかかわらず拒否します。

これらのリソースは、TI 製品を使用する設計の経験を積んだ開発者への提供を意図したものです。(1) お客様のアプリケーションに適した TI 製品の選定、(2) お客様のアプリケーションの設計、検証、試験、(3) お客様のアプリケーションに該当する各種規格や、その他のあらゆる安全性、セキュリティ、規制、または他の要件への確実な適合に関する責任を、お客様のみが単独で負うものとします。

上記の各種リソースは、予告なく変更される可能性があります。これらのリソースは、リソースで説明されている TI 製品を使用するアプリケーションの開発の目的でのみ、TI はその使用をお客様に許諾します。これらのリソースに関して、他の目的で複製することや掲載することは禁止されています。TI や第三者の知的財産権のライセンスが付与されている訳ではありません。お客様は、これらのリソースを自身で使用した結果発生するあらゆる申し立て、損害、費用、損失、責任について、TI およびその代理人を完全に補償するものとし、TI は一切の責任を拒否します。

TI の製品は、 TI の販売条件 、 TI の総合的な品質ガイドライン 、 ti.com または TI 製品などに関連して提供される他の適用条件に従い提供されます。TI がこれらのリソースを提供することは、適用される TI の保証または他の保証の放棄の拡大や変更を意味するものではありません。 TI がカスタム、またはカスタマー仕様として明示的に指定していない限り、TI の製品は標準的なカタログに掲載される汎用機器です。

お客様がいかなる追加条項または代替条項を提案する場合も、TI はそれらに異議を唱え、拒否します。

Copyright © 2026, Texas Instruments Incorporated

最終更新日：2025 年 10 月