SNx4AHC86 クワッド、2 入力排他 OR (EXOR) ゲート

1 特長

- 動作範囲：2V ~ 5.5V V_{CC}
- JESD 17 準拠で 250mA 超のラッチアップ性能
- JESD 22 を上回る ESD 保護
  - 人体モデルで 2000V (A114-A)
  - マシン・モデルで 200V (A115-A)
  - 荷電デバイス・モデルで 1000V (C101)

2 アプリケーション

- 複数の入力信号の位相差を検出
- 選択可能なインバータ / バッファの作成

3 概要

SNx4AHC86 デバイスは、クワッド 2 入力排他 OR ゲートです。これらのデバイスは、ブール関数 Y = A ⊕ B または Y = $\overline{A}$B + A $\overline{B}$ を正論理で実行します。

一般的な用途は真または補素子です。一方の入力が Low のときは、他方の入力がそのまま出力されます。一方の入力が High のときは、他方の入力の信号が反転して出力されます。

製品情報

部品番号	定格	パッケージ (1)
SN74AHC86	商用	BQA (WQFN、14)
		D (SOIC、14)
		DB (SSOP、14)
		DGV (TVSOP、14)
		N (PDIP、14)
		NS (SOP、14)
		PW (TSSOP、14)
		RGY (VQFN、14)
SN54AHC86	軍用	J (CDIP、14)
		W (CFP、14)
		FK (LCCC、20)

(1) 利用可能なパッケージについては、データシートの末尾にある注文情報を参照してください。

EXCLUSIVE OR

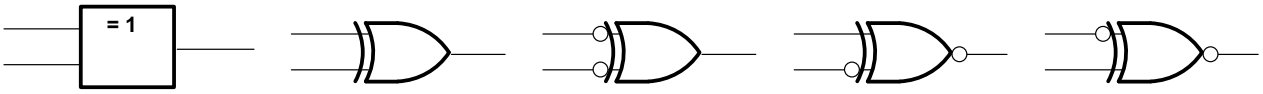

These are five equivalent exclusive-OR symbols valid for an SN74AHC86 gate in positive logic; negation may be shown at any two ports.

LOGIC-IDENTITY ELEMENT

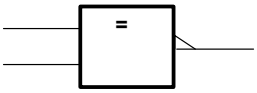

The output is active (low) if all inputs stand at the same logic level (i.e., A = B).

EVEN-PARITY ELEMENT

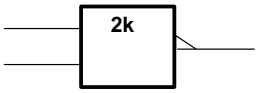

The output is active (low) if an even number of inputs (i.e., 0 or 2) are active.

ODD-PARITY ELEMENT

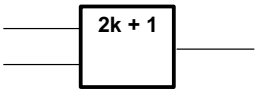

The output is active (high) if an odd number of inputs (i.e., only 1 of the 2) are active.

排他 OR ロジック

このリソースの元の言語は英語です。 翻訳は概要を便宜的に提供するもので、自動化ツール (機械翻訳) を使用していることがあり、TI では翻訳の正確性および妥当性につきましては一切保証いたしません。 実際の設計などの前には、ti.com で必ず最新の英語版をご参照くださいますようお願いいたします。

Table of Contents

1 特長 ... 1
2 アプリケーション ... 1
3 概要 ... 1
4 Revision History ... 2
5 Pin Configuration and Functions ... 3
6 Specifications ... 4
6.1 Absolute Maximum Ratings ... 4
6.2 Recommended Operating Conditions ... 4
6.3 Thermal Information ... 5
6.4 Electrical Characteristics ... 5
6.5 Switching Characteristics ... 5
6.6 Switching Characteristics ... 6
6.7 Noise Characteristics ... 6
6.8 Operating Characteristics ... 6
7 Parameter Measurement Information ... 7
8 Detailed Description ... 8
8.1 Functional Block Diagram ... 8
8.2 Device Functional Modes ... 8
9 Application and Implementation ... 9
9.1 Application Information ... 9
9.2 Typical Application ... 9
9.3 Power Supply Recommendations ... 11
9.4 Layout ... 11
10 Device and Documentation Support ... 13
10.1 Documentation Support (Analog) ... 13
10.2 ドキュメントの更新通知を受け取る方法 ... 13
10.3 サポート・リソース ... 13
10.4 Trademarks ... 13
10.5 静電気放電に関する注意事項 ... 13
10.6 用語集 ... 13
11 Mechanical, Packaging, and Orderable Information ... 13

4 Revision History

資料番号末尾の英字は改訂を表しています。その改訂履歴は英語版に準じています。

Changes from Revision K (July 2023) to Revision L (October 2023)	Page
• Updated RθJA values: D = 86 to 124.5, PW = 113 to 147.7, all values in °C/W	5
• Added *Application and Implementation* section	9

Changes from Revision J (May 2013) to Revision K (July 2023)	Page
• ドキュメント全体にわたって表、図、相互参照の採番方法を変更	1
• 「製品情報」表を追加	1
• Added the *Device and Documentation Support* sections	13
• Added the *Mechanical, Packaging, and Orderable Information* sections	13

Copyright © 2024 Texas Instruments Incorporated

5 Pin Configuration and Functions

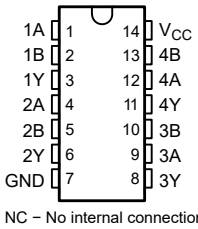

NC – No internal connection

図 5-1. SN54AHC86 J or W Package, SN74AHC86 D, DB, DGV, N, NS, or PW Package, 14-Pin (Top View)

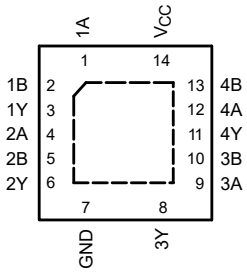

NC – No internal connection

図 5-2. SN74AHC86 RGY Package, VQFN 14-Pin (Top View)

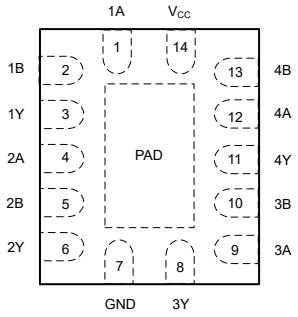

図 5-3. SN74AHC86 BQA Package, WQFN 14-Pin (Top View)

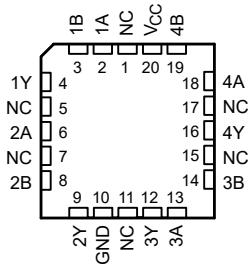

NC – No internal connection

図 5-4. SN54AHC86 FK Package, LCCC 20-Pin (Top View)

表 5-1. Pin Functions

PIN			TYPE[1]	DESCRIPTION
NAME	D, DB, DGV, N, NS, PW, RGY, J, W, or BQA	FK		
1A	1	2	I	Channel 1, Input A
1B	2	3	I	Channel 1, Input B
1Y	3	4	O	Channel 1, Output Y
2A	4	6	I	Channel 2, Input A
2B	5	8	I	Channel 2, Input B
2Y	6	9	O	Channel 2, Output Y
GND	7	10	G	Ground
3Y	8	12	O	Channel 3, Output Y
3A	9	13	I	Channel 3, Input A
3B	10	14	I	Channel 3, Input B
4Y	11	16	O	Channel 4, Output Y
4A	12	18	I	Channel 4, Input A
4B	13	19	I	Channel 4, Input B
V_{CC}	14	20	P	Positive Supply
NC	—	1, 5, 7, 11, 15, 17	—	Not internally connected
Thermal pad[2]			—	The thermal pad can be connected to GND or left floating. Do not connect to any other signal or supply.

(1) Signal Types: I = Input, O = Output, I/O = Input or Output, G = ground, P = power.
(2) BQA package only

6 Specifications

6.1 Absolute Maximum Ratings

over operating free-air temperature range (unless otherwise noted)(1)

	VALUE	UNIT
Supply voltage range, V_{CC}	–0.5 to 7	V
Input voltage range, V_I (2)	–0.5 to 7	V
Output voltage range, V_O (2)	–0.5 to V_{CC} + 0.5	V
Input clamp current, I_{IK} (V_I < 0)	–20	mA
Output clamp current, I_{OK} (V_O < 0 or V_O > V_{CC})	±20	mA
Continuous output current, I_O (V_O = 0 to V_{CC})	±25	mA
Continuous current through V_{CC} or GND	±50	mA
Storage temperature range, T_{stg}	–65 to 150	°C

(1) Stresses beyond those listed under *Absolute Maximum Ratings* may cause permanent damage to the device. These are stress ratings only, and functional operation of the device at these or any other conditions beyond those indicated under *Recommended Operating Conditions* is not implied. Exposure to absolute-maximum-rated conditions for extended periods may affect device reliability.
(2) The input and output voltage ratings may be exceeded if the input and output current ratings are observed.

6.2 Recommended Operating Conditions

			SN54AHC86		SN74AHC86		UNIT
			MIN	MAX	MIN	MAX	
V_{CC}	Supply voltage		2	5.5	2	5.5	V
V_{IH}	High-level input voltage	V_{CC}= 2 V	1.5		1.5		V
		V_{CC}= 3V	2.1		2.1		
		V_{CC}= 5.5 V	3.85		3.85		
V_{IL}	Low-level Input voltage	V_{CC}= 2 V		0.5		0.5	V
		V_{CC}= 3 V		0.9		0.9	
		V_{CC}= 5.5 V		1.65		1.65	
V_I	Input voltage		0	5.5	0	5.5	V
V_O	Output voltage		0	V_{CC}	0	V_{CC}	V
I_{OH}	High-level output current	V_{CC}= 2 V		–50		–50	mA
		V_{CC}= 3.3 V ± 0.3 V		–4		–4	
		V_{CC}= 5 V ± 0.5 V		–8		–8	
I_{OL}	Low-level output current	V_{CC}= 2 V		50		50	mA
		V_{CC}= 3.3 V ± 0.3 V		4		4	
		V_{CC}= 5 V ± 0.5 V		8		8	
Δt/Δv	Input Transition rise or fall rate	V_{CC}= 3.3 V ± 0.3 V		100		100	ns/V
		V_{CC}= 5 V ± 0.5 V		20		20	
T_A	Operating free-air temperature		–55	125	–40	125	°C

Copyright © 2024 Texas Instruments Incorporated

6.3 Thermal Information

THERMAL METRIC[1]		D[2]	DB[2]	DGV[2]	N[2]	NS[2]	PW[2]	RGY[3]	BQA	UNIT
		SOIC	SSOP	TVSOP	PDIP	SOP	TSSOP	VQFN	WQFN	
		14	14	14	14	14	14	14	14	
$R_{\theta JA}$	Junction-to-ambient thermal resistance	124.5	96	127	80	76	147.7	47	88.3	°C/W

(1) For more information about traditional and new thermal metrics, see the *Semiconductor and IC package thermal metrics* application report.
(2) The package thermal impedance is calculated in accordance with JESD 51-7.
(3) The package thermal impedance is calculated in accordance with JESD 51-5

6.4 Electrical Characteristics

over operating free-air temperature range (unless otherwise noted)

PARAMETER	TEST CONDITIONS	V_{CC}	T_A = 25°C			T_A = –55°C TO 125°C		T_A = –40°C TO 85°C		T_A = –40°C TO 125°C		UNIT
						SN54AHC86		SN74AHC86		Recommended SN74AHC86		
			MIN	TYP	MAX	MIN	MAX	MIN	MAX	MIN	MAX	
V_{OH}	I_{OH} = –50 µA	2 V	1.9	2		1.9		1.9		1.9		V
		3 V	2.9	3		2.9		2.9		2.9		
		4.5 V	4.4	4.5		4.4		4.4		4.4		
	I_{OH} = –4 mA	3 V	2.58			2.48		2.48		2.48		
	I_{OH} = –8 mA	4.5 V	3.94			3.8		3.8		3.8		
V_{OL}	I_{OL} = 50 µA	2 V			0.1		0.1		0.1		0.1	V
		3 V			0.1		0.1		0.1		0.1	
		4.5 V			0.1		0.1		0.1		0.1	
	I_{OH} = 4 mA	3 V			0.36		0.5		0.44		0.5	
	I_{OH} = 8 mA	4.5 V			0.36		0.5		0.44		0.5	
I_I	V_I = 5.5 V or GND	0 V to 5.5 V			±0.1		±1[1]		±1		±1	µA
I_{CC}	V_I = V_{CC} or GND, I_O = 0	5.5 V			2		20		20		20	µA
C_i	V_I = V_{CC} or GND	5 V		4	10				10			pF

(1) On products compliant to MIL-PRF-38535, this parameter is not production tested at VCC = 0 V.

6.5 Switching Characteristics

over recommended operating free-air temperature range, V_{CC} = 3.3 V ± 0.3 V (unless otherwise noted) (see 図 7-1)

PARAMETER	FROM (INPUT)	TO (OUTPUT)	LOAD CAPACITANCE	T_A = 25°C		T_A = –55°C TO 125°C		T_A = –40°C TO 85°C		T_A = –40°C TO 125°C		UNIT
						SN54AHC86		SN74AHC86		Recommended SN74AHC86		
				TYP	MAX	MIN	MAX	MIN	MAX	MIN	MAX	
t_{PLH}	A or B	Y	C_L = 15 pF	7[1]	11[1]	1[1]	13[1]	1	13	1	13	ns
t_{PHL}				7[1]	11[1]	1[1]	13[1]	1	13	1	13	
t_{PLH}	A or B	Y	C_L = 50 pF	9.5	14.5	1	16.5	1	16.5	1	16.5	ns
t_{PHL}				9.5	14.5	1	16.5	1	16.5	1	16.5	

(1) On products compliant to MIL-PRF-38535, this parameter is not production tested.

Copyright © 2024 Texas Instruments Incorporated

6.6 Switching Characteristics

over recommended operating free-air temperature range, V_{CC} = 5 V ± 0.5 V (unless otherwise noted) (see 図 7-1)

PARAMETER	FROM (INPUT)	TO (OUTPUT)	LOAD CAPACITANCE	T_A = 25°C		T_A = –55°C TO 125°C		T_A = –40°C TO 85°C		T_A = –40°C TO 125°C Recommended		UNIT
						SN54AHC86		SN74AHC86		SN74AHC86		
				TYP	MAX	MIN	MAX	MIN	MAX	MIN	MAX	
t_{PLH}	A or B	Y	C_L = 15 pF	4.8(1)	6.8(1)	1(1)	8(1)	1	8	1	8	ns
t_{PHL}				4.8(1)	6.8(1)	1(1)	8(1)	1	8	1	8	
t_{PLH}	A or B	Y	C_L = 50 pF	6.3	8.8	1	10	1	10	1	10	ns
t_{PHL}				6.3	8.8	1	10	1	10	1	10	

6.7 Noise Characteristics

V_{CC} = 5 V, C_L = 50 pF, T_A = 25°C(1)

PARAMETER		SN74AHC86			UNIT
		MIN	TYP	MAX	
$V_{OL(P)}$	Quiet output, maximum dynamic V_{OL}		0.3	0.8	V
$V_{OL(V)}$	Quiet output, minimum dynamic V_{OL}		–0.3	–0.8	V
$V_{OH(V)}$	Quiet output, minimum dynamic V_{OH}	4.4			V
$V_{IH(D)}$	High-level dynamic input voltage	3.5			V
$V_{IL(D)}$	Low-level dynamic input voltage			1.5	V

(1) Characteristics are for surface-mount packages only.

6.8 Operating Characteristics

V_{CC} = 5 V, T_A = 25°C

PARAMETER		TEST CONDITIONS		TYP	UNIT
C_{pd}	Power dissipation capacitance	No load,	f = 1 MHz	18	pF

Copyright © 2024 Texas Instruments Incorporated

7 Parameter Measurement Information

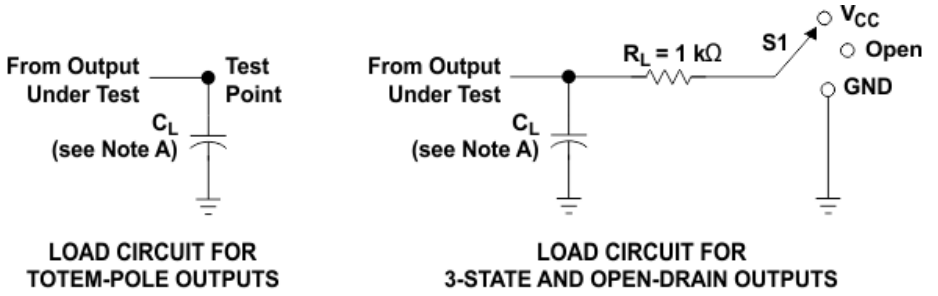

TEST	S1
t_{PLH}/t_{PHL}	Open
t_{PLZ}/t_{PZL}	V_{CC}
t_{PHZ}/t_{PZH}	GND
Open Drain	V_{CC}

LOAD CIRCUIT FOR TOTEM-POLE OUTPUTS

LOAD CIRCUIT FOR 3-STATE AND OPEN-DRAIN OUTPUTS

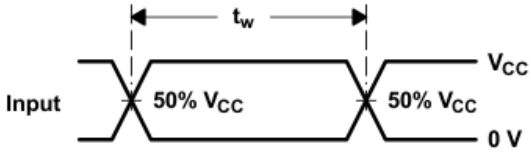

VOLTAGE WAVEFORMS PULSE DURATION

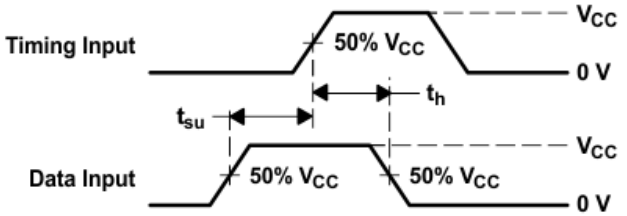

VOLTAGE WAVEFORMS SETUP AND HOLD TIMES

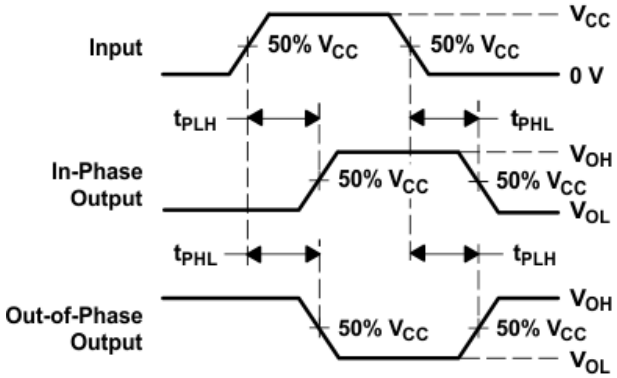

VOLTAGE WAVEFORMS PROPAGATION DELAY TIMES INVERTING AND NONINVERTING OUTPUTS

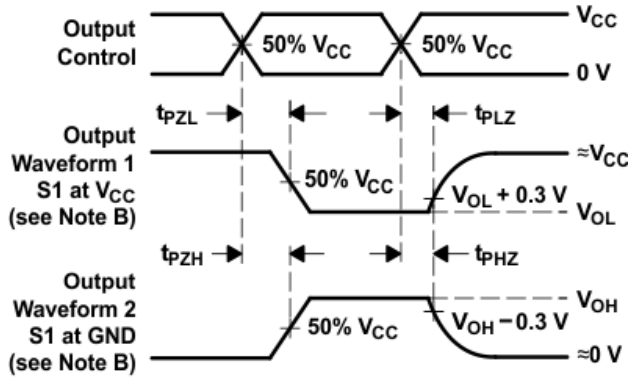

VOLTAGE WAVEFORMS ENABLE AND DISABLE TIMES LOW- AND HIGH-LEVEL ENABLING

A. C_L includes probe and jig capacitance.
B. Waveform 1 is for an output with internal conditions such that the output is low except when disabled by the output control. Waveform 2 is for an output with internal conditions such that the output is high except when disabled by the output control.
C. All input pulses are supplied by generators having the following characteristics: PRR ≤ 1 MHz, Z_O = 50 Ω, t_r ≤ 3 ns, t_f ≤ 3 ns.
D. The outputs are measured one at a time with one input transition per measurement.
E. All parameters and waveforms are not applicable to all devices.

図 7-1. Load Circuit and Voltage Waveforms

8 Detailed Description

8.1 Functional Block Diagram

An exclusive-OR gate has many applications, some of which can be represented better by alternative logic symbols.

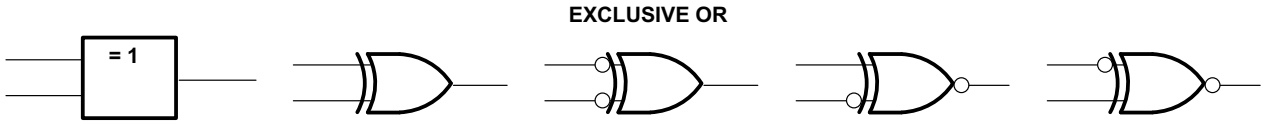

These are five equivalent exclusive-OR symbols valid for an SN74AHC86 gate in positive logic; negation may be shown at any two ports.

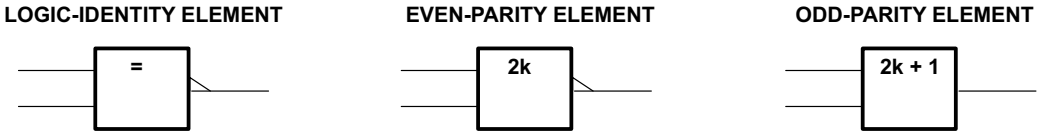

The output is active (low) if all inputs stand at the same logic level (i.e., A = B).

The output is active (low) if an even number of inputs (i.e., 0 or 2) are active.

The output is active (high) if an odd number of inputs (i.e., only 1 of the 2) are active.

図 8-1. Exclusive–OR Logic

8.2 Device Functional Modes

表 8-1. Function Table (Each Gate)

INPUTS		OUTPUT
A	B	Y
L	L	L
L	H	H
H	L	H
H	H	L

Copyright © 2024 Texas Instruments Incorporated

9 Application and Implementation

注

Information in the following applications sections is not part of the TI component specification, and TI does not warrant its accuracy or completeness. TI's customers are responsible for determining suitability of components for their purposes, as well as validating and testing their design implementation to confirm system functionality.

9.1 Application Information

In this application, three 2-input AND gates are combined to produce a 4-input AND gate function as shown in 図 9-1. The fourth gate can be used for another application in the system, or the inputs can be grounded and the channel left unused.

The SN74LV4T08-Q1 is used to directly control the $\overline{\text{RESET}}$ pin of a motor controller. The controller requires four input signals to all be HIGH before being enabled, and should be disabled in the event that any one signal goes LOW. The 4-input AND gate function combines the four individual reset signals into a single active-low reset signal.

9.2 Typical Application

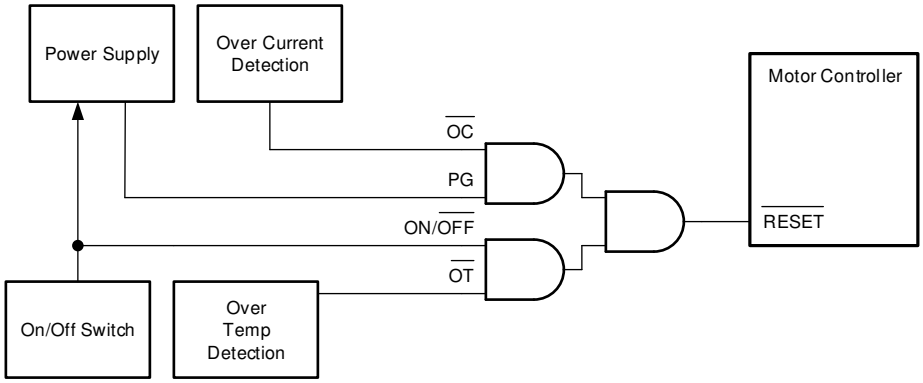

図 9-1. Typical Application Block Diagram

9.2.1 Power Considerations

Ensure the desired supply voltage is within the range specified in the *Recommended Operating Conditions*. The supply voltage sets the electrical characteristics of the device as described in the *Electrical Characteristics* section.

The positive voltage supply must be capable of sourcing current equal to the maximum static supply current, I_{CC}, listed in the *Electrical Characteristics*, and any transient current required for switching.

The ground must be capable of sinking current equal to the total current to be sunk by all outputs of the SNx4AHC86 plus the maximum supply current, I_{CC}, listed in the *Electrical Characteristics*, and any transient current required for switching. The logic device can only sink as much current that can be sunk into its ground connection. Be sure to not exceed the maximum total current through GND listed in the *Absolute Maximum Ratings*.

The SNx4AHC86 can drive a load with a total capacitance less than or equal to 50 pF while still meeting all of the data sheet specifications. Larger capacitive loads can be applied; however, it is not recommended to exceed 50 pF.

The SNx4AHC86 can drive a load with total resistance described by $R_L \geq V_O / I_O$, with the output voltage and current defined in the *Electrical Characteristics* table with V_{OL}. When outputting in the HIGH state, the output

Copyright © 2024 Texas Instruments Incorporated

voltage in the equation is defined as the difference between the measured output voltage and the supply voltage at the V_{CC} pin.

Total power consumption can be calculated using the information provided in the *CMOS Power Consumption and Cpd Calculation* application note.

Thermal increase can be calculated using the information provided in the *Thermal Characteristics of Standard Linear and Logic (SLL) Packages and Devices* application note.

注意

The maximum junction temperature, $T_{J(max)}$ listed in the *Absolute Maximum Ratings*, is an additional limitation to prevent damage to the device. Do not violate any values listed in the *Absolute Maximum Ratings*. These limits are provided to prevent damage to the device.

9.2.1.1 Input Considerations

Input signals must cross to be considered a logic LOW, and to be considered a logic HIGH. Do not exceed the maximum input voltage range found in the *Absolute Maximum Ratings*.

Unused inputs must be terminated to either V_{CC} or ground. The unused inputs can be directly terminated if the input is completely unused, or they can be connected with a pull-up or pull-down resistor if the input will be used sometimes, but not always. A pull-up resistor is used for a default state of HIGH, and a pull-down resistor is used for a default state of LOW. The drive current of the controller, leakage current into the SNx4AHC86 (as specified in the *Electrical Characteristics*), and the desired input transition rate limits the resistor size. A 10-kΩ resistor value is often used due to these factors.

Refer to the *Feature Description* section for additional information regarding the inputs for this device.

9.2.1.2 Output Considerations

The ground voltage is used to produce the output LOW voltage. Sinking current into the output will increase the output voltage as specified by the V_{OL} specification in the *Electrical Characteristics*.

Unused outputs can be left floating. Do not connect outputs directly to V_{CC} or ground.

Refer to the *Feature Description* section for additional information regarding the outputs for this device.

Copyright © 2024 Texas Instruments Incorporated

9.2.2 Detailed Design Procedure

1. Add a decoupling capacitor from V_{CC} to GND. The capacitor needs to be placed physically close to the device and electrically close to both the V_{CC} and GND pins. An example layout is shown in the *Layout* section.
2. Ensure the capacitive load at the output is ≤ 50 pF. This is not a hard limit; it will, however, ensure optimal performance. This can be accomplished by providing short, appropriately sized traces from the SN74AHC1G04-Q1 to one or more of the receiving devices.
3. Ensure the resistive load at the output is larger than (V_{CC} / $I_{O(max)}$) Ω, so that the maximum output current from the *Absolute Maximum Ratings* is not violated. Most CMOS inputs have a resistive load measured in MΩ; much larger than the minimum calculated previously.
4. Thermal issues are rarely a concern for logic gates; the power consumption and thermal increase, however, can be calculated using the steps provided in the application report, *CMOS Power Consumption and Cpd Calculation*.

9.2.3 Application Curves

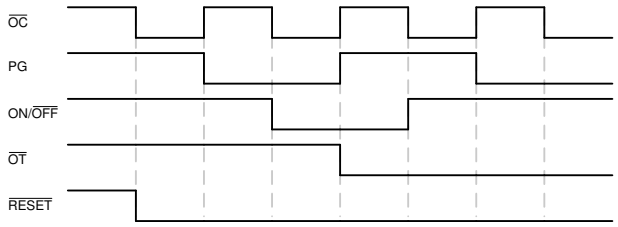

図 9-2. Application Timing Diagram

9.3 Power Supply Recommendations

The power supply can be any voltage between the minimum and maximum supply voltage rating located in the *Recommended Operating Conditions*. Each V_{CC} terminal should have a good bypass capacitor to prevent power disturbance. A 0.1-µF capacitor is recommended for this device. It is acceptable to parallel multiple bypass capacitors to reject different frequencies of noise. The 0.1-µF and 1-µF capacitors are commonly used in parallel. The bypass capacitor should be installed as close to the power terminal as possible for best results, as shown in the following layout example.

9.4 Layout

9.4.1 Layout Guidelines

When using multiple-input and multiple-channel logic devices, inputs must never be left floating. In many cases, functions or parts of functions of digital logic devices are unused (for example, when only two inputs of a triple-input AND gate are used or only 3 of the 4 buffer gates are used). Such unused input pins must not be left unconnected because the undefined voltages at the outside connections result in undefined operational states. All unused inputs of digital logic devices must be connected to a logic high or logic low voltage, as defined by the input voltage specifications, to prevent them from floating. The logic level that must be applied to any particular unused input depends on the function of the device. Generally, the inputs are tied to GND or V_{CC}, whichever makes more sense for the logic function or is more convenient.

Copyright © 2024 Texas Instruments Incorporated

9.4.1.1 Layout Example

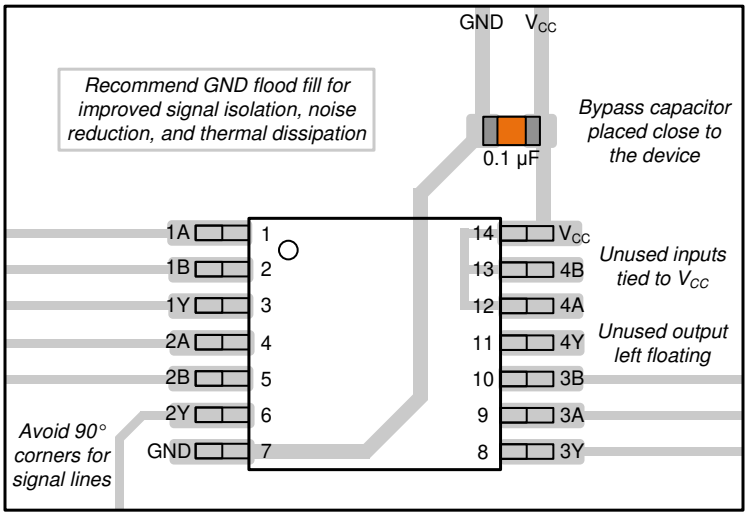

図 9-3. Example Layout for the SNx4AHC86

Copyright © 2024 Texas Instruments Incorporated

10 Device and Documentation Support

TI offers an extensive line of development tools. Tools and software to evaluate the performance of the device, generate code, and develop solutions are listed below.

10.1 Documentation Support (Analog)

10.1.1 Related Documentation

For related documentation, see the following:

- Texas Instruments, *CMOS Power Consumption and Cpd Calculation* application note
- Texas Instruments, *Designing With Logic* application note
- Texas Instruments, *Thermal Characteristics of Standard Linear and Logic (SLL) Packages and Devices* application note
- Texas Instruments, *Implications of Slow or Floating CMOS Inputs* application note

10.2 ドキュメントの更新通知を受け取る方法

ドキュメントの更新についての通知を受け取るには、www.tij.co.jp のデバイス製品フォルダを開いてください。[通知] をクリックして登録すると、変更されたすべての製品情報に関するダイジェストを毎週受け取ることができます。 変更の詳細については、改訂されたドキュメントに含まれている改訂履歴をご覧ください。

10.3 サポート・リソース

テキサス・インスツルメンツ E2E™ サポート・フォーラムは、エンジニアが検証済みの回答と設計に関するヒントを工キスパートから迅速かつ直接得ることができる場所です。既存の回答を検索したり、独自の質問をしたりすることで、設計で必要な支援を迅速に得ることができます。

リンクされているコンテンツは、各寄稿者により「現状のまま」提供されるものです。これらはテキサス・インスツルメンツの仕様を構成するものではなく、必ずしもテキサス・インスツルメンツの見解を反映したものではありません。テキサス・インスツルメンツの使用条件を参照してください。

10.4 Trademarks

テキサス・インスツルメンツ E2E™ is a trademark of Texas Instruments.
すべての商標は、それぞれの所有者に帰属します。

10.5 静電気放電に関する注意事項



この IC は、ESD によって破損する可能性があります。テキサス・インスツルメンツは、IC を取り扱う際には常に適切な注意を払うことを推奨します。正しい取り扱いおよび設置手順に従わない場合、デバイスを破損するおそれがあります。

ESD による破損は、わずかな性能低下からデバイスの完全な故障まで多岐にわたります。精密な IC の場合、パラメータがわずかに変化するだけで公表されている仕様から外れる可能性があるため、破損が発生しやすくなっています。

10.6 用語集

テキサス・インスツルメンツ用語集　この用語集には、用語や略語の一覧および定義が記載されています。

11 Mechanical, Packaging, and Orderable Information

The following pages include mechanical, packaging, and orderable information. This information is the most current data available for the designated devices. This data is subject to change without notice and revision of this document. For browser-based versions of this data sheet, refer to the left-hand navigation.

Copyright © 2024 Texas Instruments Incorporated

PACKAGING INFORMATION

Orderable part number	Status (1)	Material type (2)	Package | Pins	Package qty | Carrier	RoHS (3)	Lead finish/ Ball material (4)	MSL rating/ Peak reflow (5)	Op temp (°C)	Part marking (6)
5962-9681601Q2A	Active	Production	LCCC (FK) | 20	55 | TUBE	No	SNPB	N/A for Pkg Type	-55 to 125	5962-9681601Q2A SNJ54AHC86FK
5962-9681601QCA	Active	Production	CDIP (J) | 14	25 | TUBE	No	SNPB	N/A for Pkg Type	-55 to 125	5962-9681601QCA SNJ54AHC86J
5962-9681601QDA	Active	Production	CFP (W) | 14	25 | TUBE	No	SNPB	N/A for Pkg Type	-55 to 125	5962-9681601QDA SNJ54AHC86W
SN74AHC86BQAR	Active	Production	WQFN (BQA) | 14	3000 | LARGE T&R	Yes	SN	Level-1-260C-UNLIM	-40 to 125	AHC86
SN74AHC86BQAR.A	Active	Production	WQFN (BQA) | 14	3000 | LARGE T&R	Yes	SN	Level-1-260C-UNLIM	-40 to 125	AHC86
SN74AHC86D	Obsolete	Production	SOIC (D) | 14	-	-	Call TI	Call TI	-40 to 125	AHC86
SN74AHC86DBR	Active	Production	SSOP (DB) | 14	2000 | LARGE T&R	Yes	NIPDAU	Level-1-260C-UNLIM	-40 to 125	HA86
SN74AHC86DBR.A	Active	Production	SSOP (DB) | 14	2000 | LARGE T&R	Yes	NIPDAU	Level-1-260C-UNLIM	-40 to 125	HA86
SN74AHC86DGVR	Active	Production	TVSOP (DGV) | 14	2000 | LARGE T&R	Yes	NIPDAU	Level-1-260C-UNLIM	-40 to 125	HA86
SN74AHC86DGVR.A	Active	Production	TVSOP (DGV) | 14	2000 | LARGE T&R	Yes	NIPDAU	Level-1-260C-UNLIM	-40 to 125	HA86
SN74AHC86DR	Active	Production	SOIC (D) | 14	2500 | LARGE T&R	Yes	NIPDAU	Level-1-260C-UNLIM	-40 to 125	AHC86
SN74AHC86DR.A	Active	Production	SOIC (D) | 14	2500 | LARGE T&R	Yes	NIPDAU	Level-1-260C-UNLIM	-40 to 125	AHC86
SN74AHC86DRG4	Active	Production	SOIC (D) | 14	2500 | LARGE T&R	Yes	NIPDAU	Level-1-260C-UNLIM	-40 to 125	AHC86
SN74AHC86DRG4.A	Active	Production	SOIC (D) | 14	2500 | LARGE T&R	Yes	NIPDAU	Level-1-260C-UNLIM	-40 to 125	AHC86
SN74AHC86N	Active	Production	PDIP (N) | 14	25 | TUBE	Yes	NIPDAU	N/A for Pkg Type	-40 to 125	SN74AHC86N
SN74AHC86N.A	Active	Production	PDIP (N) | 14	25 | TUBE	Yes	NIPDAU	N/A for Pkg Type	-40 to 125	SN74AHC86N
SN74AHC86NSR	Active	Production	SOP (NS) | 14	2000 | LARGE T&R	Yes	NIPDAU	Level-1-260C-UNLIM	-40 to 125	AHC86
SN74AHC86NSR.A	Active	Production	SOP (NS) | 14	2000 | LARGE T&R	Yes	NIPDAU	Level-1-260C-UNLIM	-40 to 125	AHC86
SN74AHC86PW	Obsolete	Production	TSSOP (PW) | 14	-	-	Call TI	Call TI	-40 to 125	HA86
SN74AHC86PWR	Active	Production	TSSOP (PW) | 14	2000 | LARGE T&R	Yes	NIPDAU	Level-1-260C-UNLIM	-40 to 125	HA86
SN74AHC86PWR.A	Active	Production	TSSOP (PW) | 14	2000 | LARGE T&R	Yes	NIPDAU	Level-1-260C-UNLIM	-40 to 125	HA86
SN74AHC86RGYR	NRND	Production	VQFN (RGY) | 14	3000 | LARGE T&R	Yes	NIPDAU	Level-2-260C-1 YEAR	-40 to 125	HA86
SN74AHC86RGYR.A	NRND	Production	VQFN (RGY) | 14	3000 | LARGE T&R	Yes	NIPDAU	Level-2-260C-1 YEAR	-40 to 125	HA86

Orderable part number	Status (1)	Material type (2)	Package | Pins	Package qty | Carrier	RoHS (3)	Lead finish/ Ball material (4)	MSL rating/ Peak reflow (5)	Op temp (°C)	Part marking (6)
SNJ54AHC86FK	Active	Production	LCCC (FK) | 20	55 | TUBE	No	SNPB	N/A for Pkg Type	-55 to 125	5962-9681601Q2A SNJ54AHC 86FK
SNJ54AHC86FK.A	Active	Production	LCCC (FK) | 20	55 | TUBE	No	SNPB	N/A for Pkg Type	-55 to 125	5962-9681601Q2A SNJ54AHC 86FK
SNJ54AHC86J	Active	Production	CDIP (J) | 14	25 | TUBE	No	SNPB	N/A for Pkg Type	-55 to 125	5962-9681601QCA SNJ54AHC86J
SNJ54AHC86J.A	Active	Production	CDIP (J) | 14	25 | TUBE	No	SNPB	N/A for Pkg Type	-55 to 125	5962-9681601QCA SNJ54AHC86J
SNJ54AHC86W	Active	Production	CFP (W) | 14	25 | TUBE	No	SNPB	N/A for Pkg Type	-55 to 125	5962-9681601QDA SNJ54AHC86W
SNJ54AHC86W.A	Active	Production	CFP (W) | 14	25 | TUBE	No	SNPB	N/A for Pkg Type	-55 to 125	5962-9681601QDA SNJ54AHC86W

(1) **Status:** For more details on status, see our product life cycle.

(2) **Material type:** When designated, preproduction parts are prototypes/experimental devices, and are not yet approved or released for full production. Testing and final process, including without limitation quality assurance, reliability performance testing, and/or process qualification, may not yet be complete, and this item is subject to further changes or possible discontinuation. If available for ordering, purchases will be subject to an additional waiver at checkout, and are intended for early internal evaluation purposes only. These items are sold without warranties of any kind.

(3) **RoHS values:** Yes, No, RoHS Exempt. See the TI RoHS Statement for additional information and value definition.

(4) **Lead finish/Ball material:** Parts may have multiple material finish options. Finish options are separated by a vertical ruled line. Lead finish/Ball material values may wrap to two lines if the finish value exceeds the maximum column width.

(5) **MSL rating/Peak reflow:** The moisture sensitivity level ratings and peak solder (reflow) temperatures. In the event that a part has multiple moisture sensitivity ratings, only the lowest level per JEDEC standards is shown. Refer to the shipping label for the actual reflow temperature that will be used to mount the part to the printed circuit board.

(6) **Part marking:** There may be an additional marking, which relates to the logo, the lot trace code information, or the environmental category of the part.

Multiple part markings will be inside parentheses. Only one part marking contained in parentheses and separated by a "~" will appear on a part. If a line is indented then it is a continuation of the previous line and the two combined represent the entire part marking for that device.

Important Information and Disclaimer: The information provided on this page represents TI's knowledge and belief as of the date that it is provided. TI bases its knowledge and belief on information provided by third parties, and makes no representation or warranty as to the accuracy of such information. Efforts are underway to better integrate information from third parties. TI has taken and continues to take reasonable steps to provide representative and accurate information but may not have conducted destructive testing or chemical analysis on incoming materials and chemicals. TI and TI suppliers consider certain information to be proprietary, and thus CAS numbers and other limited information may not be available for release.

In no event shall TI's liability arising out of such information exceed the total purchase price of the TI part(s) at issue in this document sold by TI to Customer on an annual basis.

OTHER QUALIFIED VERSIONS OF SN54AHC86, SN74AHC86 :

- Catalog : SN74AHC86
- Military : SN54AHC86

NOTE: Qualified Version Definitions:

- Catalog - TI's standard catalog product
- Military - QML certified for Military and Defense Applications

TAPE AND REEL INFORMATION

REEL DIMENSIONS

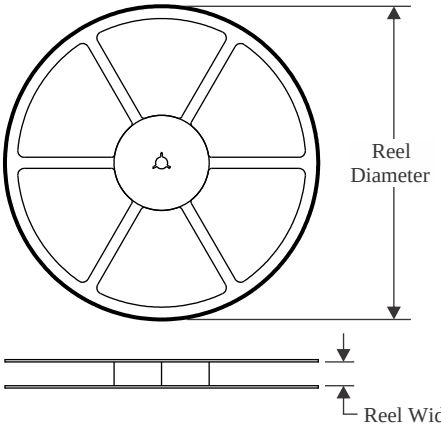

TAPE DIMENSIONS

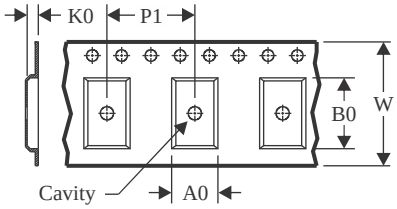

A0	Dimension designed to accommodate the component width
B0	Dimension designed to accommodate the component length
K0	Dimension designed to accommodate the component thickness
W	Overall width of the carrier tape
P1	Pitch between successive cavity centers

QUADRANT ASSIGNMENTS FOR PIN 1 ORIENTATION IN TAPE

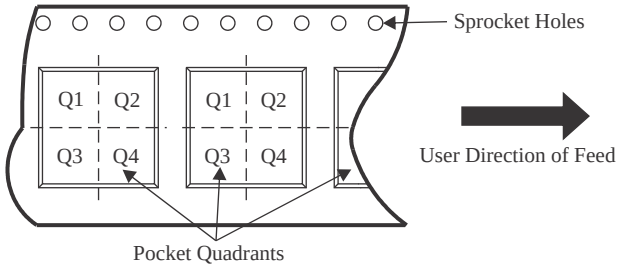

*All dimensions are nominal

Device	Package Type	Package Drawing	Pins	SPQ	Reel Diameter (mm)	Reel Width W1 (mm)	A0 (mm)	B0 (mm)	K0 (mm)	P1 (mm)	W (mm)	Pin1 Quadrant
SN74AHC86BQAR	WQFN	BQA	14	3000	180.0	12.4	2.8	3.3	1.1	4.0	12.0	Q1
SN74AHC86DBR	SSOP	DB	14	2000	330.0	16.4	8.35	6.6	2.4	12.0	16.0	Q1
SN74AHC86DGVR	TVSOP	DGV	14	2000	330.0	12.4	6.8	4.0	1.6	8.0	12.0	Q1
SN74AHC86DR	SOIC	D	14	2500	330.0	12.4	3.75	3.75	1.15	8.0	12.0	Q1
SN74AHC86DRG4	SOIC	D	14	2500	330.0	16.4	6.5	9.0	2.1	8.0	16.0	Q1
SN74AHC86NSR	SOP	NS	14	2000	330.0	16.4	8.1	10.4	2.5	12.0	16.0	Q1
SN74AHC86PWR	TSSOP	PW	14	2000	330.0	12.4	6.9	5.6	1.6	8.0	12.0	Q1
SN74AHC86RGYR	VQFN	RGY	14	3000	330.0	12.4	3.75	3.75	1.15	8.0	12.0	Q1

TAPE AND REEL BOX DIMENSIONS

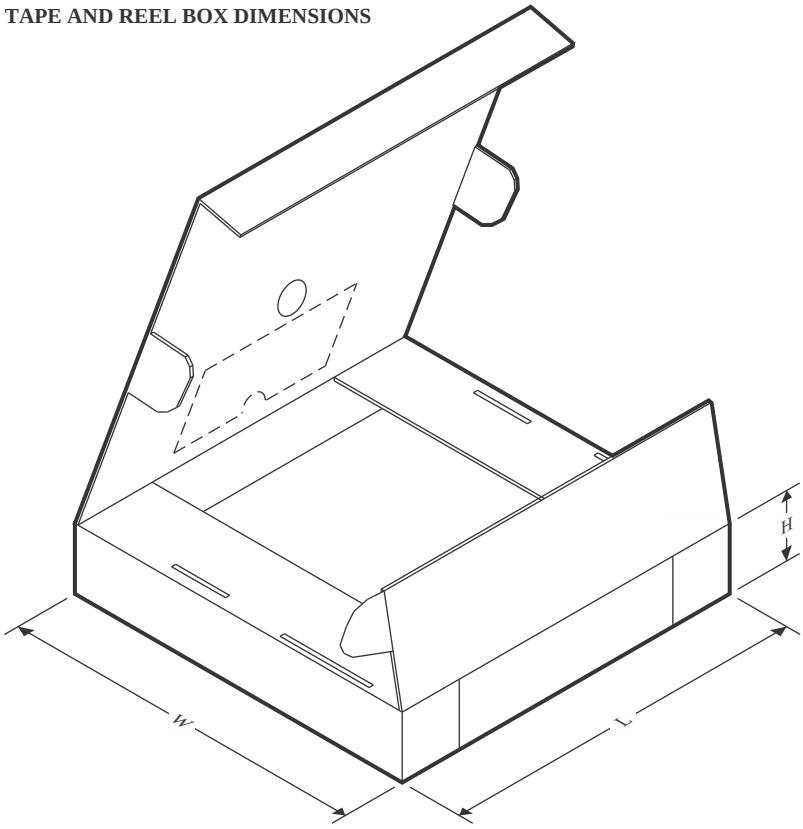

*All dimensions are nominal

Device	Package Type	Package Drawing	Pins	SPQ	Length (mm)	Width (mm)	Height (mm)
SN74AHC86BQAR	WQFN	BQA	14	3000	210.0	185.0	35.0
SN74AHC86DBR	SSOP	DB	14	2000	353.0	353.0	32.0
SN74AHC86DGVR	TVSOP	DGV	14	2000	353.0	353.0	32.0
SN74AHC86DR	SOIC	D	14	2500	353.0	353.0	32.0
SN74AHC86DRG4	SOIC	D	14	2500	353.0	353.0	32.0
SN74AHC86NSR	SOP	NS	14	2000	353.0	353.0	32.0
SN74AHC86PWR	TSSOP	PW	14	2000	353.0	353.0	32.0
SN74AHC86RGYR	VQFN	RGY	14	3000	353.0	353.0	32.0

TUBE

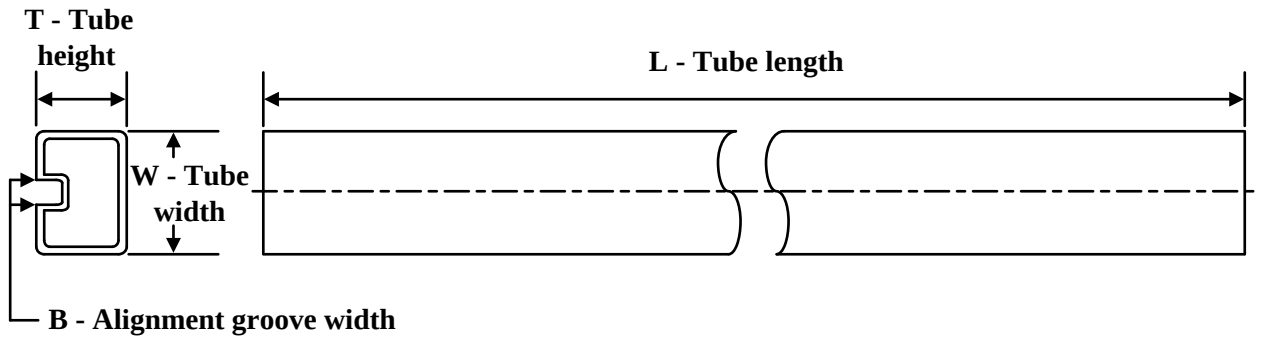

*All dimensions are nominal

Device	Package Name	Package Type	Pins	SPQ	L (mm)	W (mm)	T (µm)	B (mm)
5962-9681601Q2A	FK	LCCC	20	55	506.98	12.06	2030	NA
5962-9681601QDA	W	CFP	14	25	506.98	26.16	6220	NA
SN74AHC86N	N	PDIP	14	25	506	13.97	11230	4.32
SN74AHC86N	N	PDIP	14	25	506	13.97	11230	4.32
SN74AHC86N.A	N	PDIP	14	25	506	13.97	11230	4.32
SN74AHC86N.A	N	PDIP	14	25	506	13.97	11230	4.32
SNJ54AHC86FK	FK	LCCC	20	55	506.98	12.06	2030	NA
SNJ54AHC86FK.A	FK	LCCC	20	55	506.98	12.06	2030	NA
SNJ54AHC86W	W	CFP	14	25	506.98	26.16	6220	NA
SNJ54AHC86W.A	W	CFP	14	25	506.98	26.16	6220	NA

GENERIC PACKAGE VIEW

RGY 14

VQFN - 1 mm max height

3.5 x 3.5, 0.5 mm pitch

PLASTIC QUAD FLATPACK - NO LEAD

This image is a representation of the package family, actual package may vary.
Refer to the product data sheet for package details.

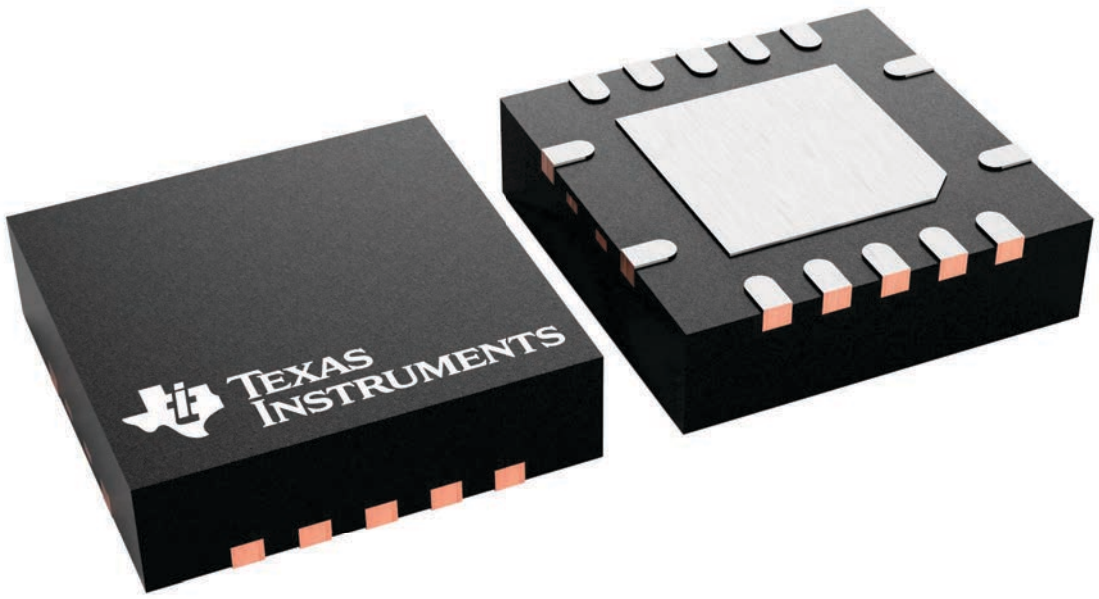

4231541/A

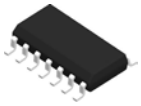

PACKAGE OUTLINE

D0014A

SOIC - 1.75 mm max height

SMALL OUTLINE INTEGRATED CIRCUIT

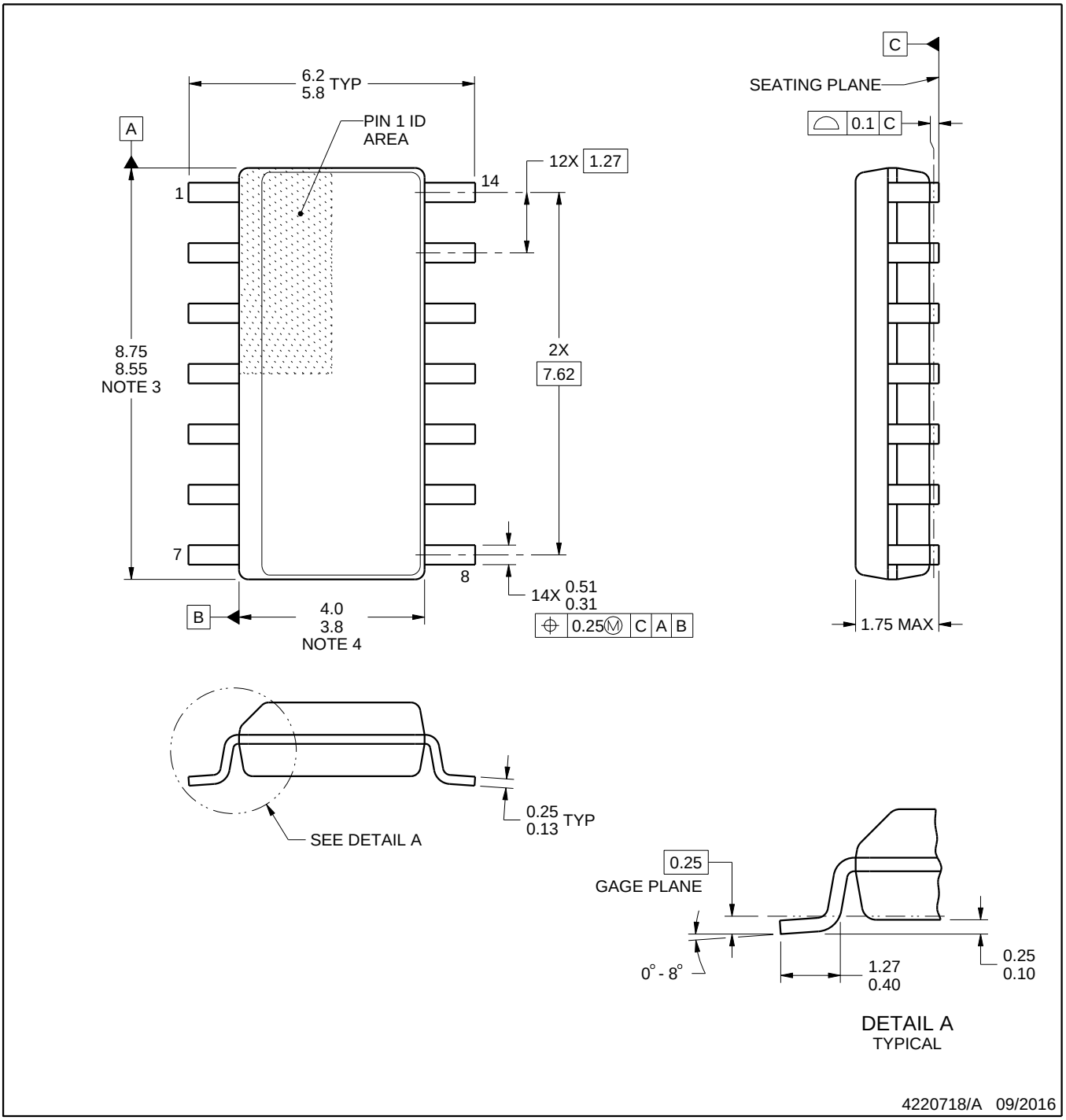

NOTES:

1. All linear dimensions are in millimeters. Dimensions in parenthesis are for reference only. Dimensioning and tolerancing per ASME Y14.5M.
2. This drawing is subject to change without notice.
3. This dimension does not include mold flash, protrusions, or gate burrs. Mold flash, protrusions, or gate burrs shall not exceed 0.15 mm, per side.
4. This dimension does not include interlead flash. Interlead flash shall not exceed 0.43 mm, per side.
5. Reference JEDEC registration MS-012, variation AB.

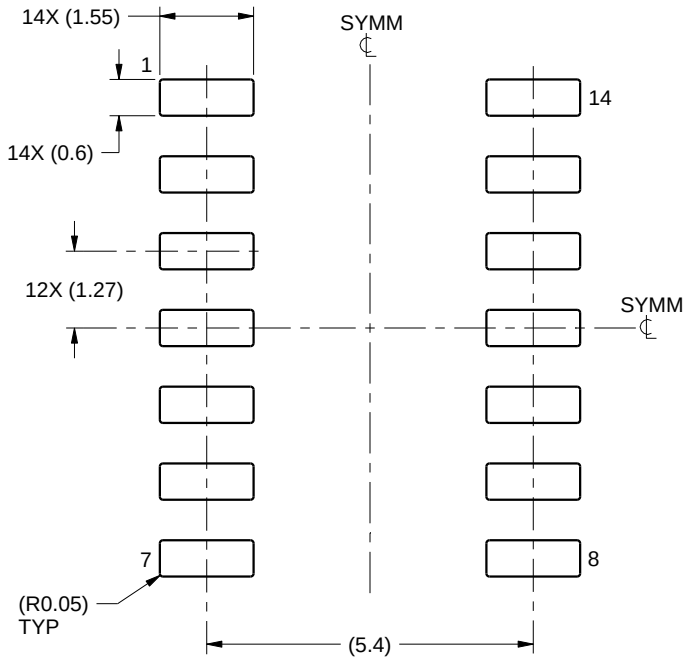

LAND PATTERN EXAMPLE
SCALE:8X

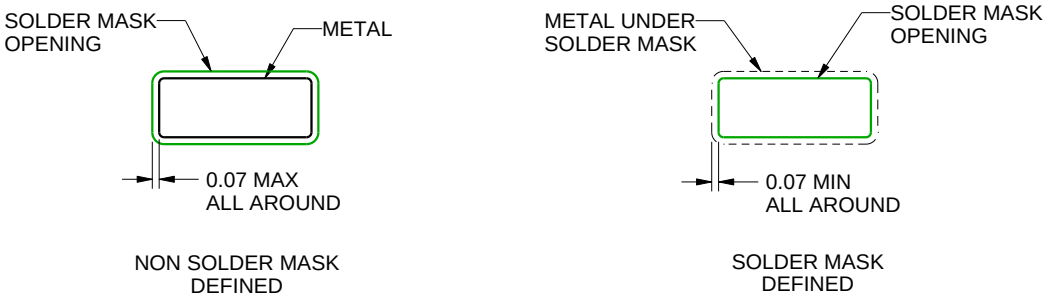

SOLDER MASK DETAILS

4220718/A 09/2016

NOTES: (continued)

6. Publication IPC-7351 may have alternate designs.
7. Solder mask tolerances between and around signal pads can vary based on board fabrication site.

EXAMPLE STENCIL DESIGN

D0014A

SOIC - 1.75 mm max height

SMALL OUTLINE INTEGRATED CIRCUIT

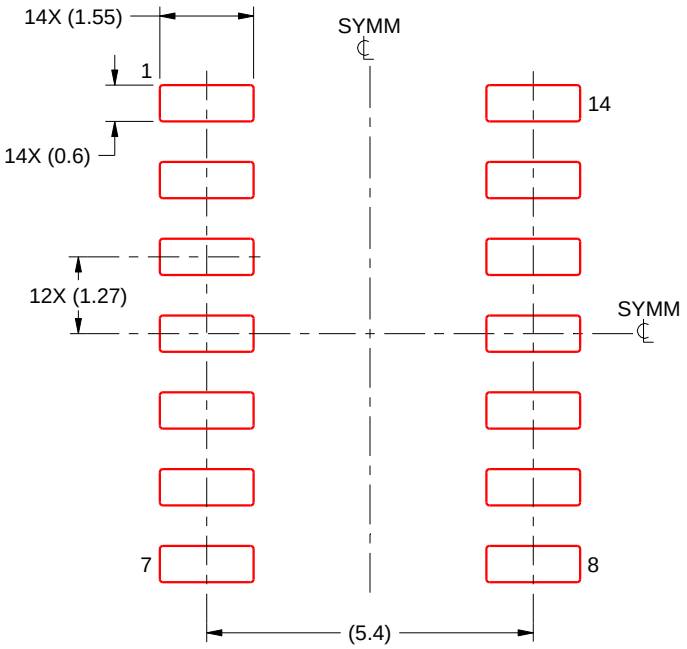

SOLDER PASTE EXAMPLE
BASED ON 0.125 mm THICK STENCIL
SCALE:8X

4220718/A 09/2016

NOTES: (continued)

8. Laser cutting apertures with trapezoidal walls and rounded corners may offer better paste release. IPC-7525 may have alternate design recommendations.
9. Board assembly site may have different recommendations for stencil design.

GENERIC PACKAGE VIEW

BQA 14

WQFN - 0.8 mm max height

2.5 x 3, 0.5 mm pitch

PLASTIC QUAD FLATPACK - NO LEAD

This image is a representation of the package family, actual package may vary.
Refer to the product data sheet for package details.

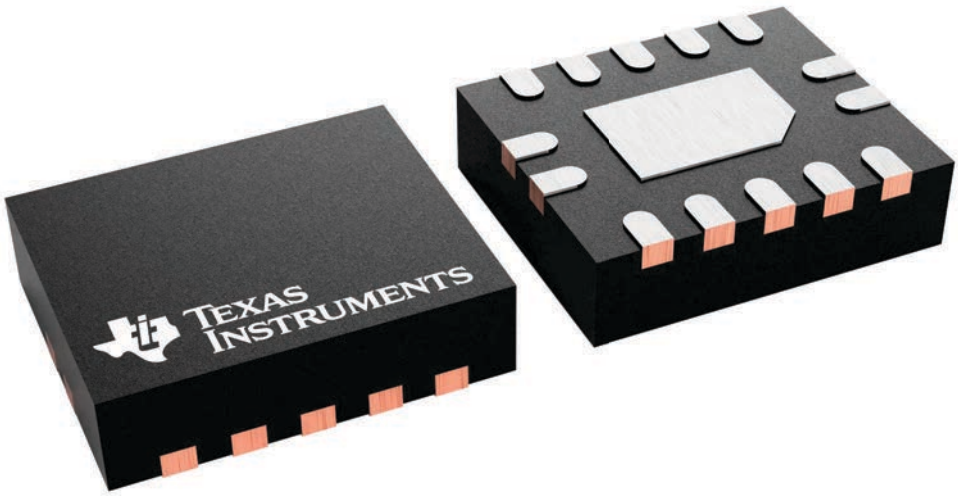

PACKAGE OUTLINE

BQA0014A

WQFN - 0.8 mm max height

PLASTIC QUAD FLAT PACK-NO LEAD

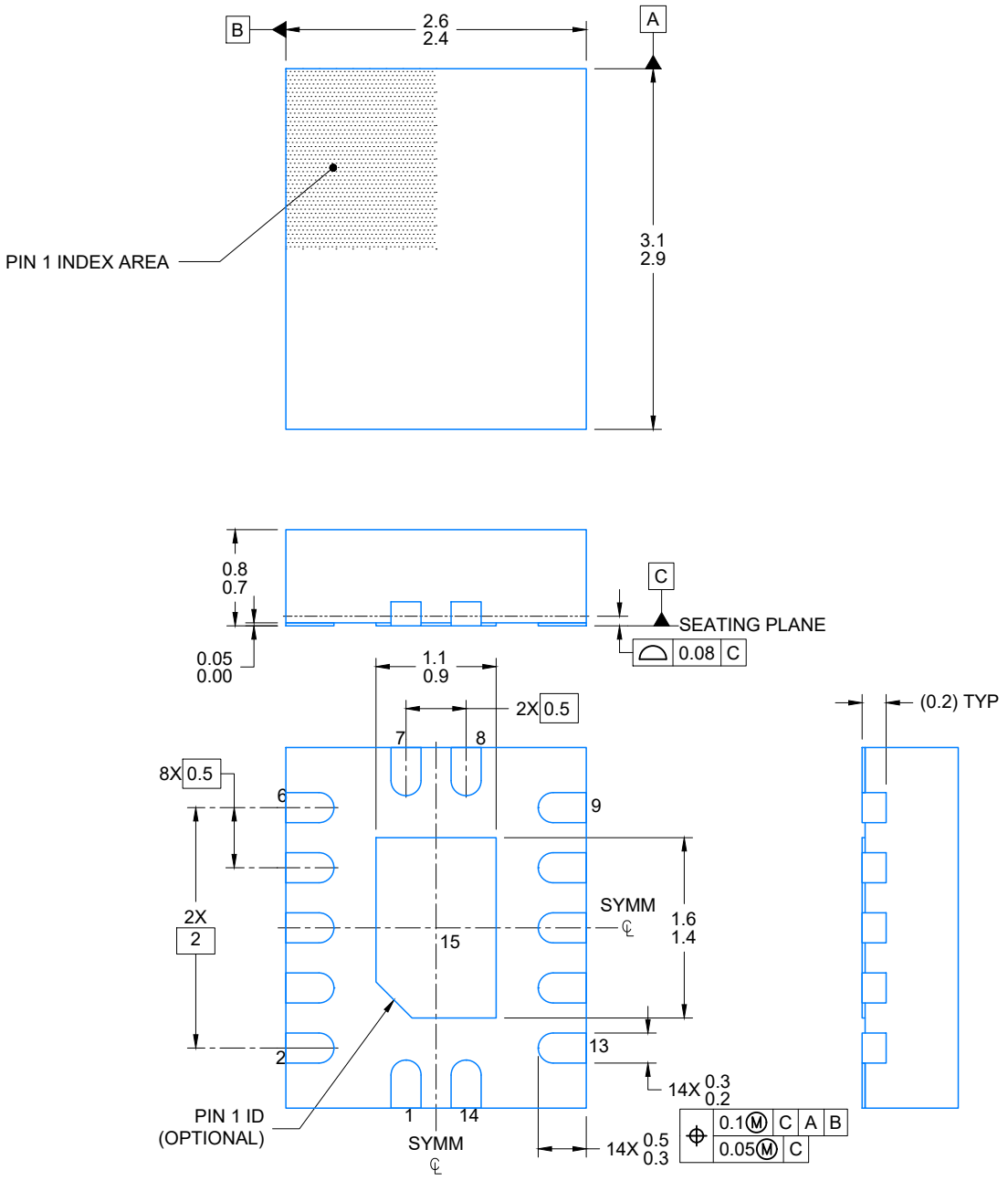

NOTES:

1. All linear dimensions are in millimeters. Any dimensions in parenthesis are for reference only. Dimensioning and tolerancing per ASME Y14.5M.
2. This drawing is subject to change without notice.
3. The package thermal pad must be soldered to the printed circuit board for optimal thermal and mechanical performance.

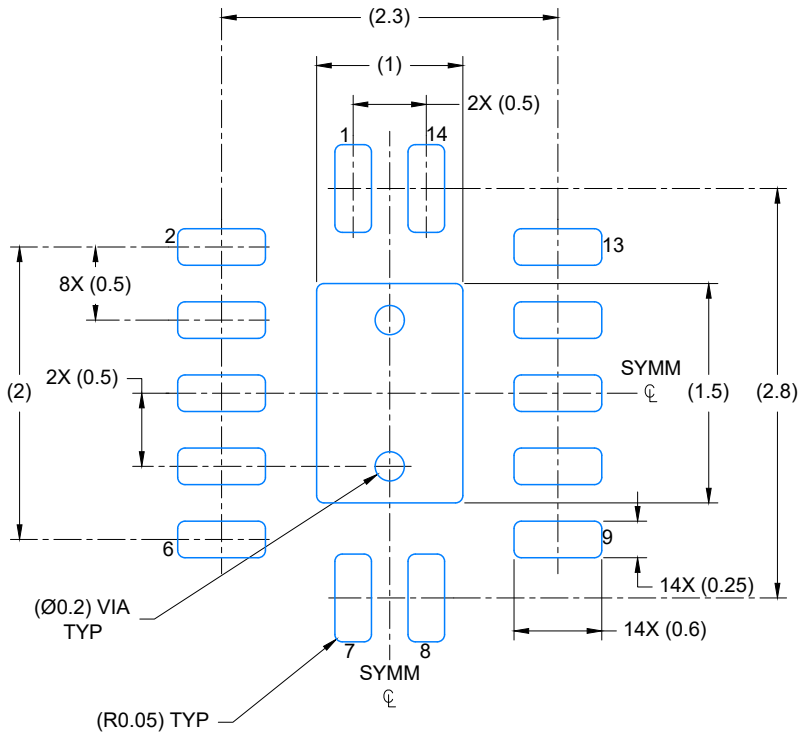

LAND PATTERN EXAMPLE
EXPOSED METAL SHOWN
SCALE: 20X

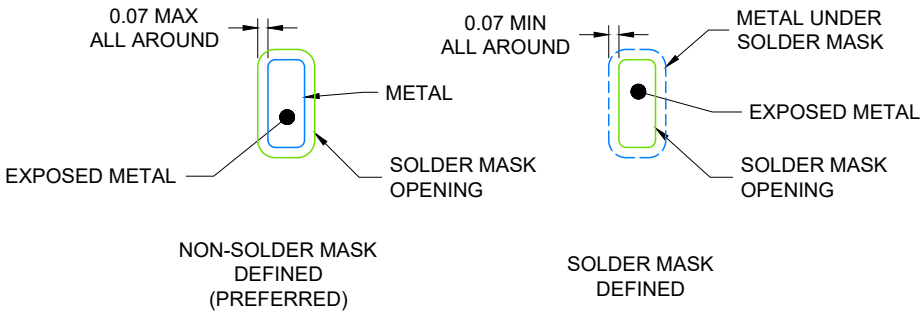

4224636/A 11/2018

NOTES: (continued)

4. This package is designed to be soldered to a thermal pad on the board. For more information, see Texas Instruments literature number SLUA271 (www.ti.com/lit/slua271).
5. Vias are optional depending on application, refer to device data sheet. If any vias are implemented, refer to their locations shown on this view. It is recommended that vias under paste be filled, plugged or tented.

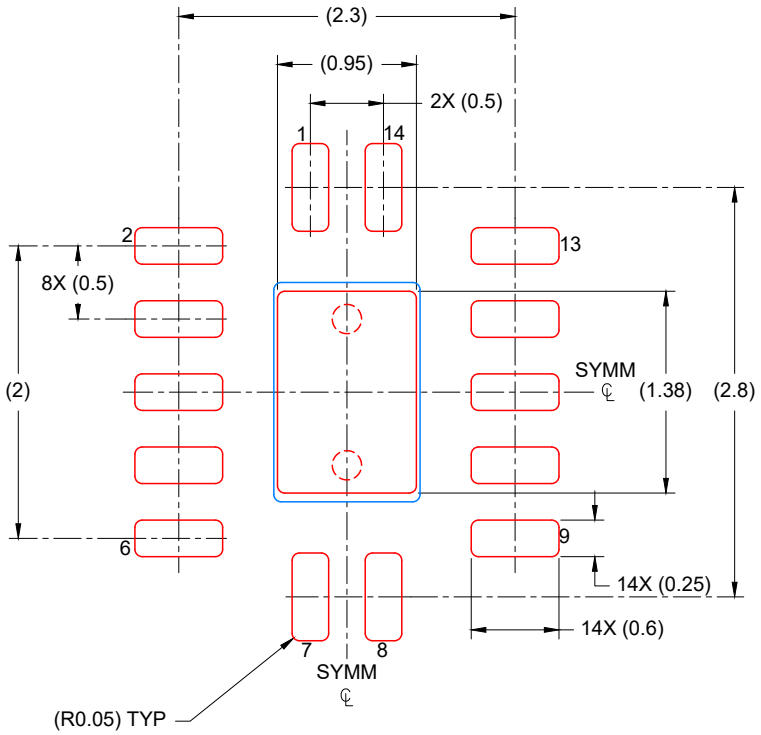

SOLDER PASTE EXAMPLE
BASED ON 0.125 mm THICK STENCIL

EXPOSED PAD
88% PRINTED COVERAGE BY AREA
SCALE: 20X

4224636/A 11/2018

NOTES: (continued)

6. Laser cutting apertures with trapezoidal walls and rounded corners may offer better paste release. IPC-7525 may have alternate design recommendations.

MECHANICAL DATA

NS (R-PDSO-G)** **PLASTIC SMALL-OUTLINE PACKAGE**

14-PINS SHOWN

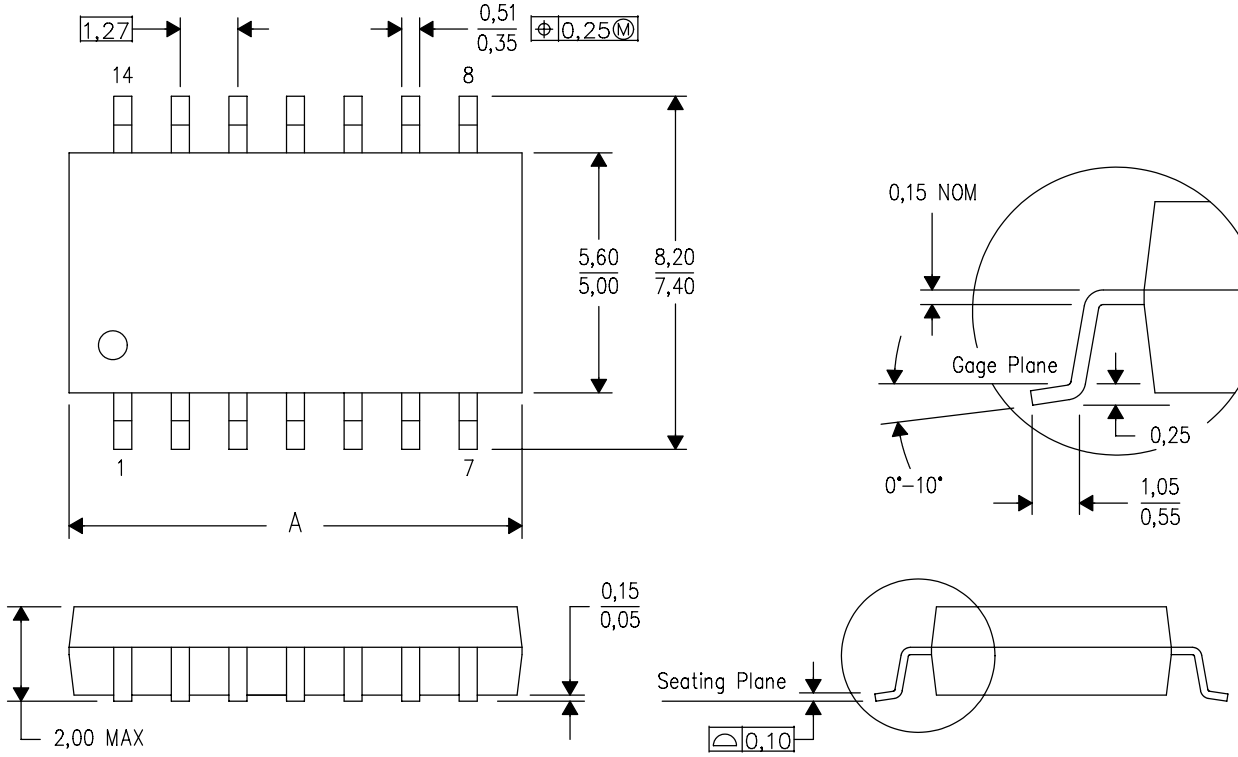

DIM \ PINS **	14	16	20	24
A MAX	10,50	10,50	12,90	15,30
A MIN	9,90	9,90	12,30	14,70

4040062/C 03/03

NOTES:
A. All linear dimensions are in millimeters.
B. This drawing is subject to change without notice.
C. Body dimensions do not include mold flash or protrusion, not to exceed 0,15.

W (R–GDFP–F14) CERAMIC DUAL FLATPACK

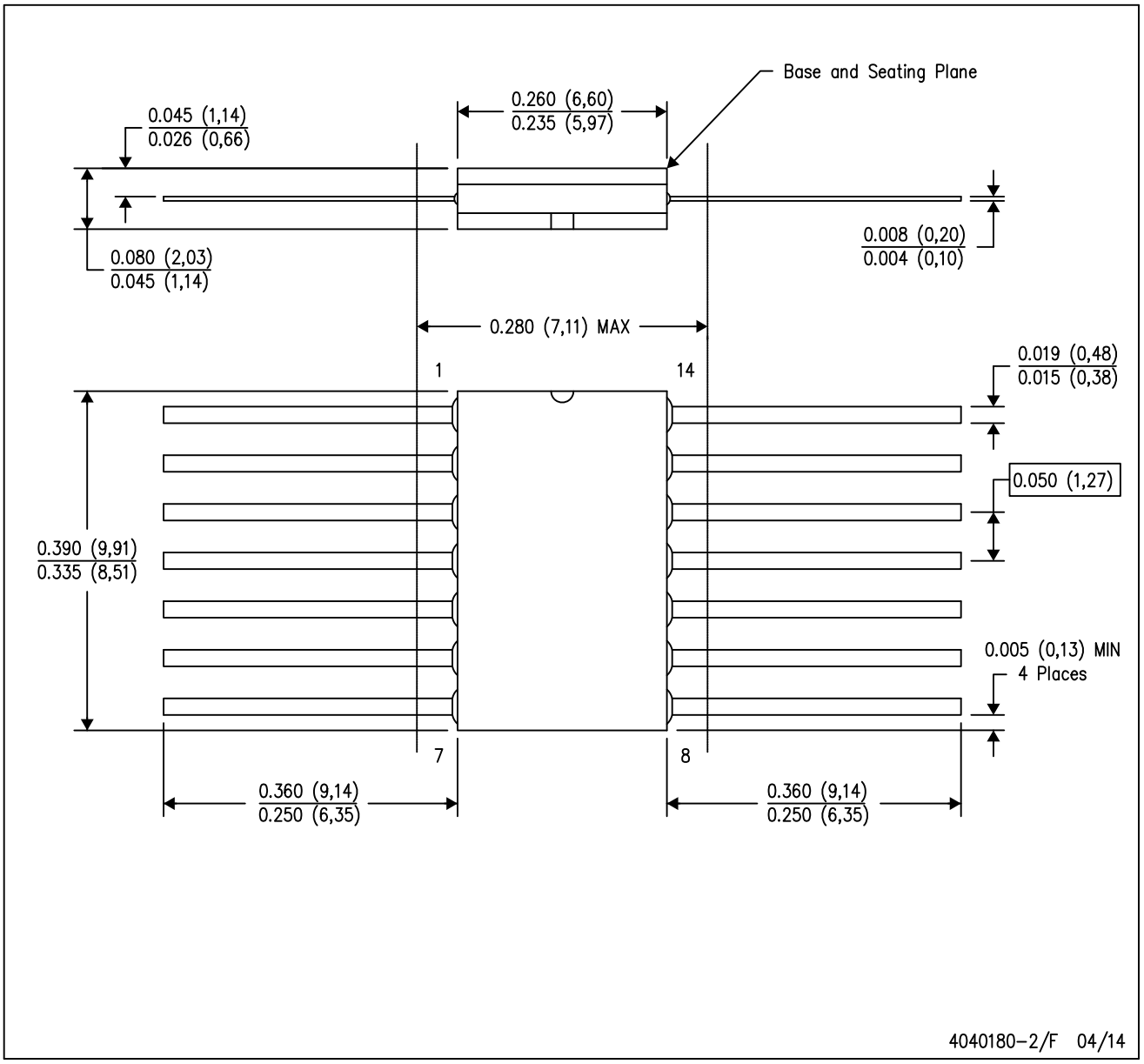

NOTES:
A. All linear dimensions are in inches (millimeters).
B. This drawing is subject to change without notice.
C. This package can be hermetically sealed with a ceramic lid using glass frit.
D. Index point is provided on cap for terminal identification only.
E. Falls within MIL STD 1835 GDFP1–F14

DGV (R-PDSO-G)** **PLASTIC SMALL-OUTLINE**

24 PINS SHOWN

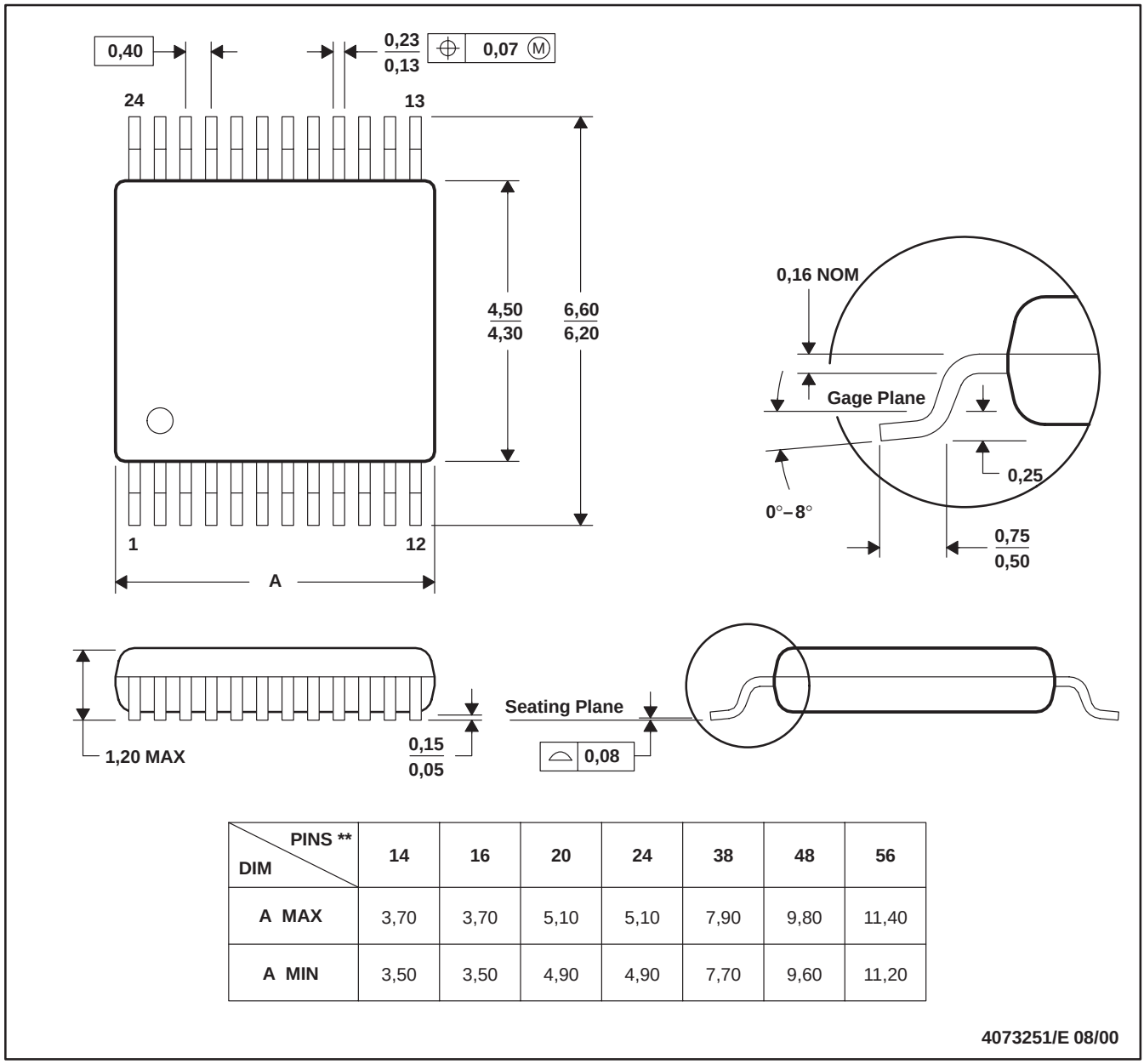

DIM \ PINS **	14	16	20	24	38	48	56
A MAX	3,70	3,70	5,10	5,10	7,90	9,80	11,40
A MIN	3,50	3,50	4,90	4,90	7,70	9,60	11,20

4073251/E 08/00

NOTES: A. All linear dimensions are in millimeters.
B. This drawing is subject to change without notice.
C. Body dimensions do not include mold flash or protrusion, not to exceed 0,15 per side.
D. Falls within JEDEC: 24/48 Pins – MO-153
14/16/20/56 Pins – MO-194

PACKAGE OUTLINE

DB0014A

SSOP - 2 mm max height

SMALL OUTLINE PACKAGE

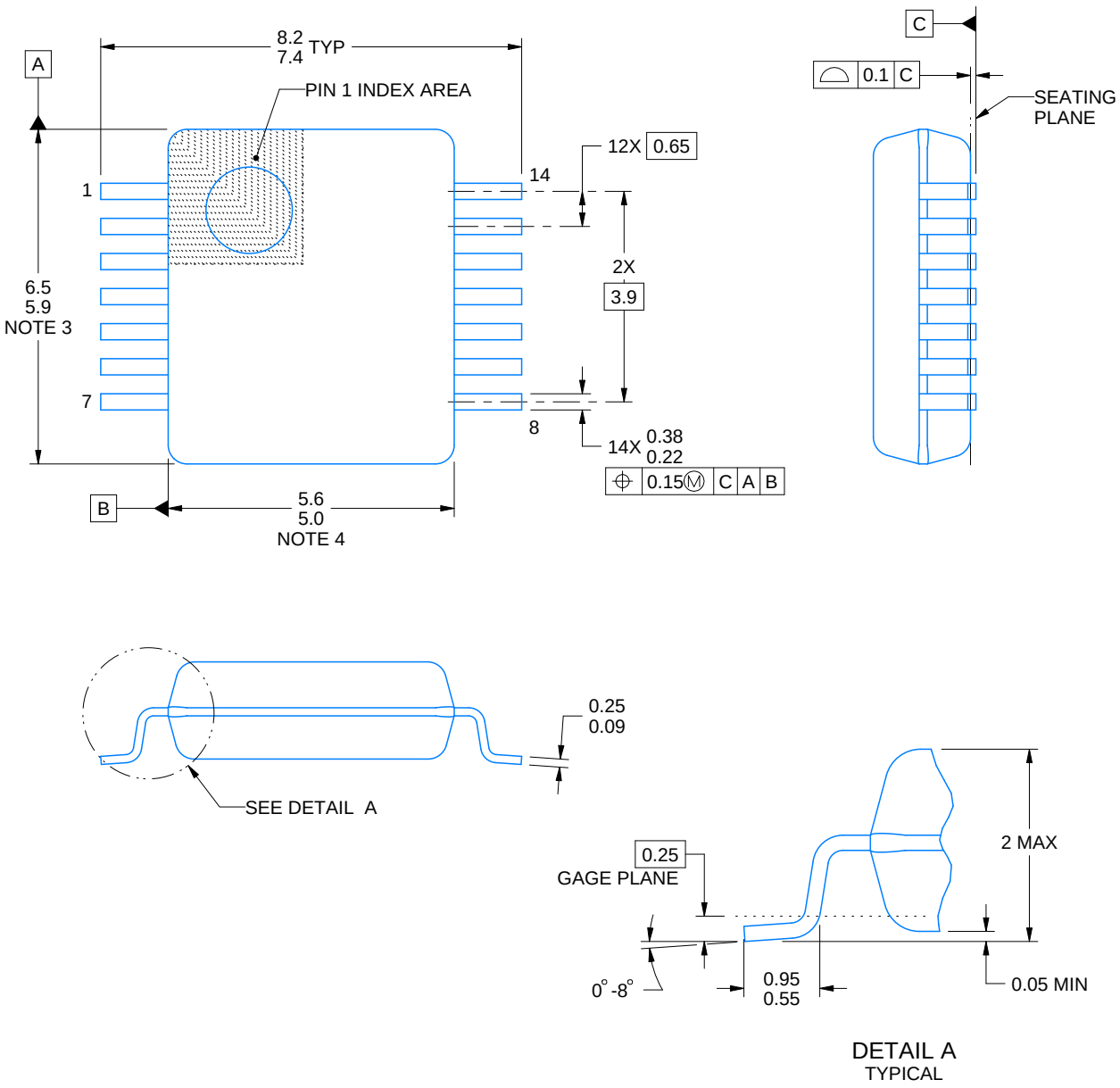

4220762/A 05/2024

NOTES:

1. All linear dimensions are in millimeters. Any dimensions in parenthesis are for reference only. Dimensioning and tolerancing per ASME Y14.5M.
2. This drawing is subject to change without notice.
3. This dimension does not include mold flash, protrusions, or gate burrs. Mold flash, protrusions, or gate burrs shall not exceed 0.15 mm per side.
4. Reference JEDEC registration MO-150.

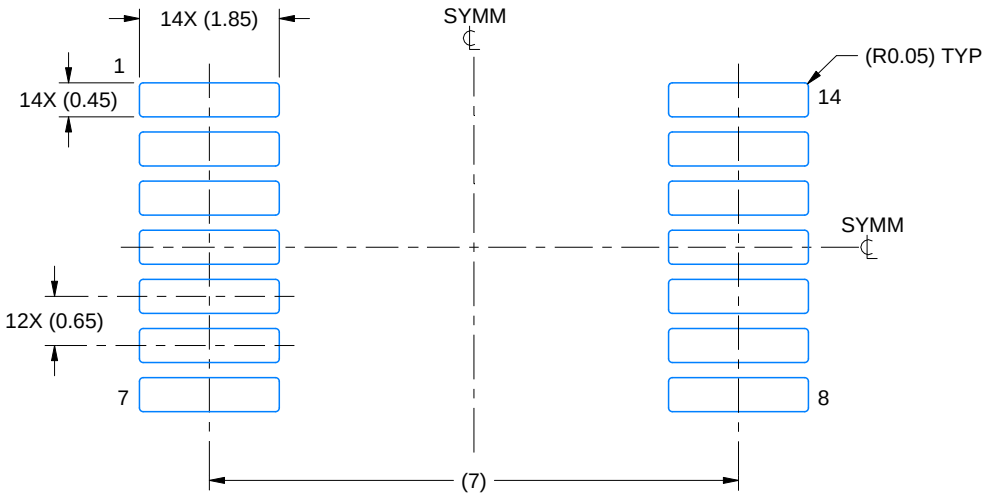

LAND PATTERN EXAMPLE
EXPOSED METAL SHOWN
SCALE: 10X

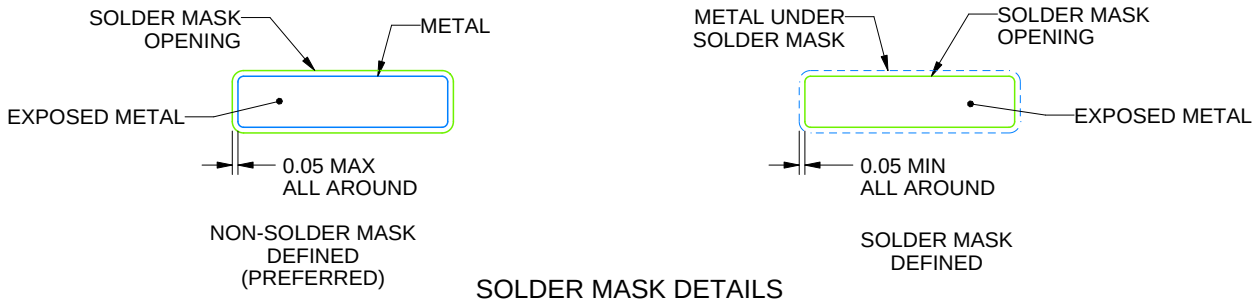

SOLDER MASK DETAILS

4220762/A 05/2024

NOTES: (continued)

5. Publication IPC-7351 may have alternate designs.
6. Solder mask tolerances between and around signal pads can vary based on board fabrication site.

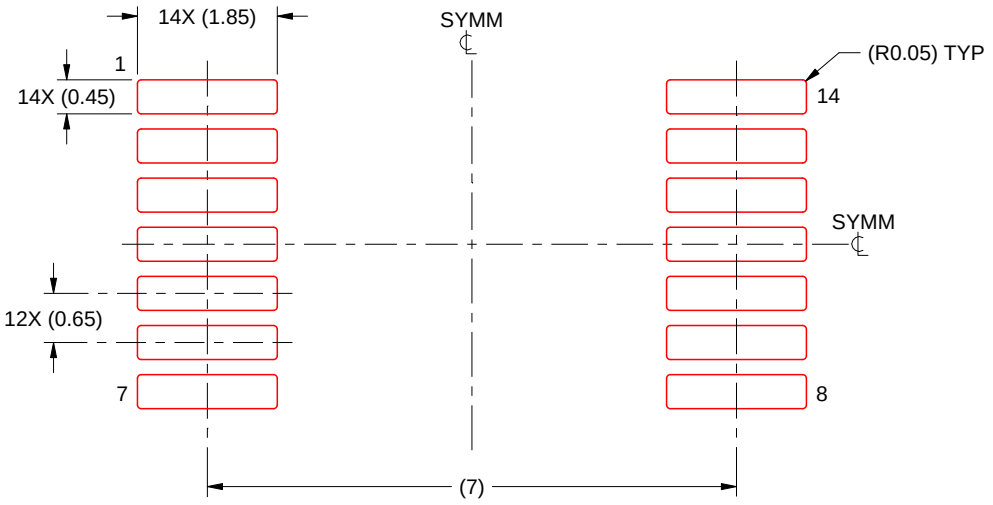

SOLDER PASTE EXAMPLE
BASED ON 0.125 mm THICK STENCIL
SCALE: 10X

4220762/A 05/2024

NOTES: (continued)

7. Laser cutting apertures with trapezoidal walls and rounded corners may offer better paste release. IPC-7525 may have alternate design recommendations.
8. Board assembly site may have different recommendations for stencil design.

GENERIC PACKAGE VIEW

FK 20

LCCC - 2.03 mm max height

8.89 x 8.89, 1.27 mm pitch

LEADLESS CERAMIC CHIP CARRIER

This image is a representation of the package family, actual package may vary.
Refer to the product data sheet for package details.

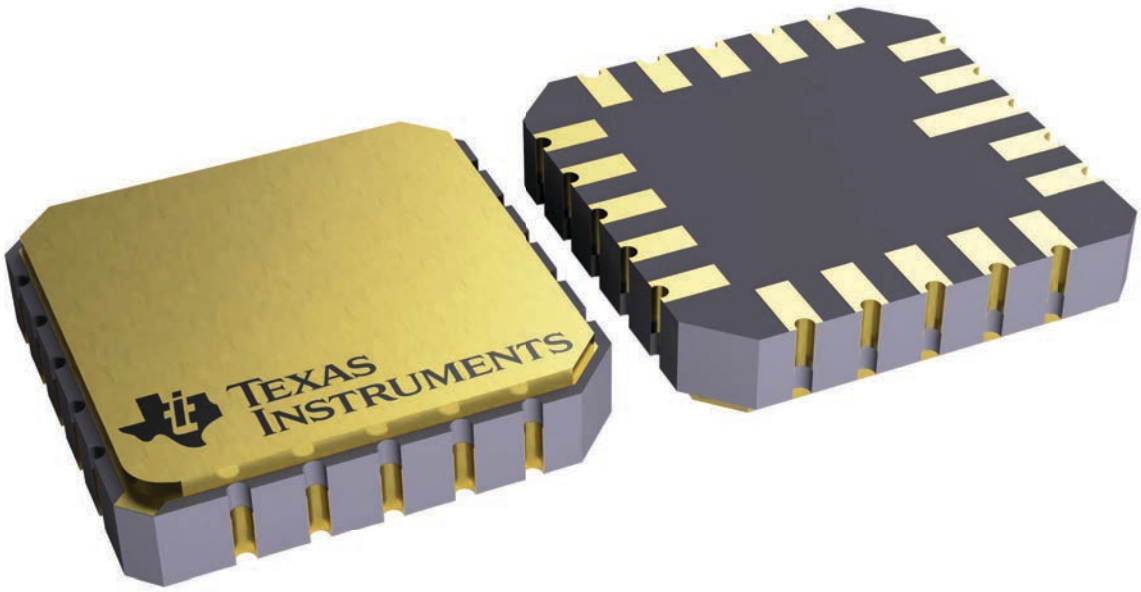

4229370VA\

GENERIC PACKAGE VIEW

J 14 CDIP - 5.08 mm max height

CERAMIC DUAL IN LINE PACKAGE

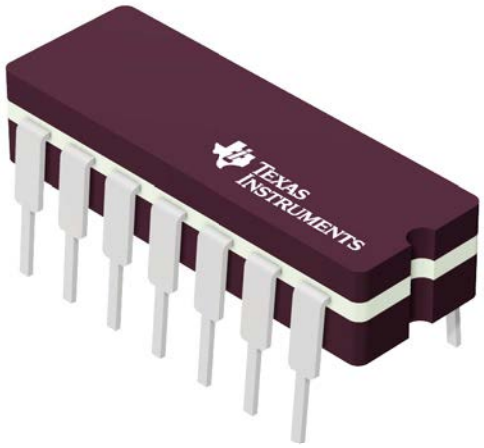

Images above are just a representation of the package family, actual package may vary.
Refer to the product data sheet for package details.

4040083-5/G



PACKAGE OUTLINE

J0014A

CDIP - 5.08 mm max height

CERAMIC DUAL IN LINE PACKAGE

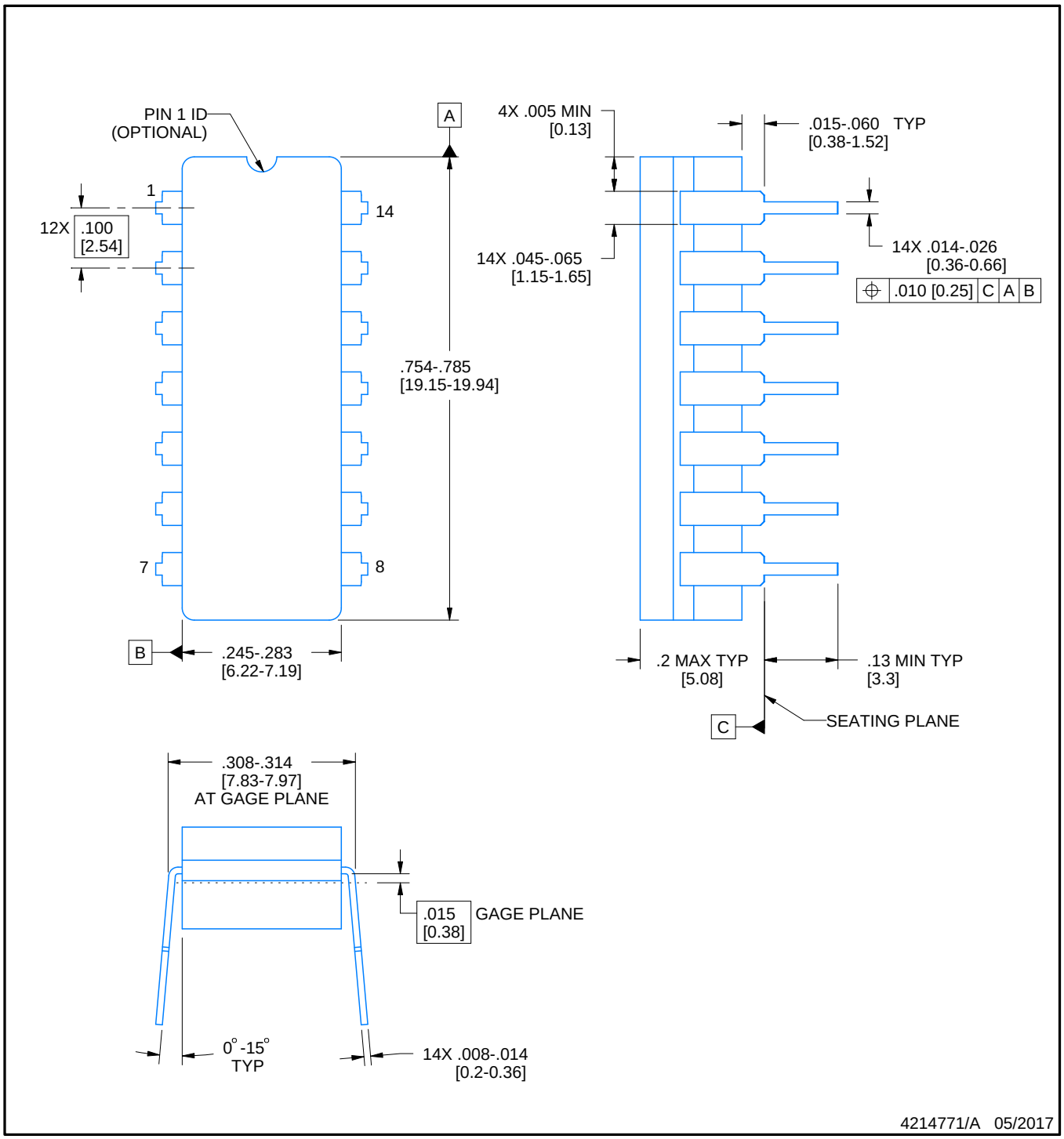

NOTES:

1. All controlling linear dimensions are in inches. Dimensions in brackets are in millimeters. Any dimension in brackets or parenthesis are for reference only. Dimensioning and tolerancing per ASME Y14.5M.
2. This drawing is subject to change without notice.
3. This package is hermitically sealed with a ceramic lid using glass frit.
4. Index point is provided on cap for terminal identification only and on press ceramic glass frit seal only.
5. Falls within MIL-STD-1835 and GDIP1-T14.

EXAMPLE BOARD LAYOUT

J0014A

CDIP - 5.08 mm max height

CERAMIC DUAL IN LINE PACKAGE

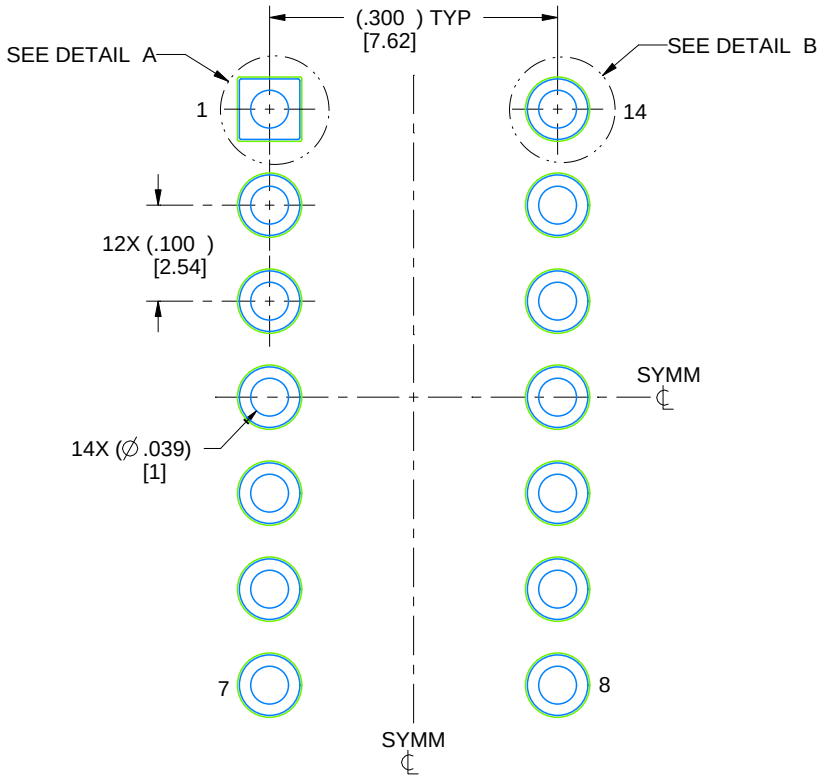

LAND PATTERN EXAMPLE
NON-SOLDER MASK DEFINED
SCALE: 5X

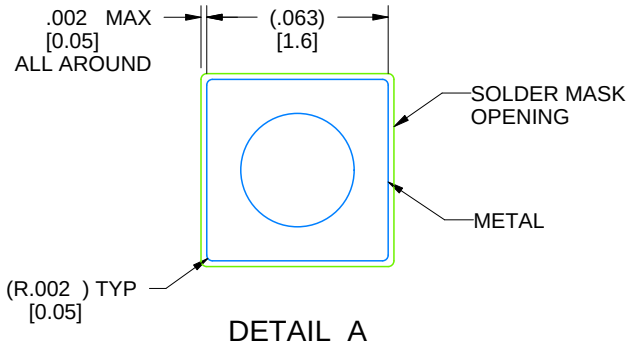

DETAIL A
SCALE: 15X

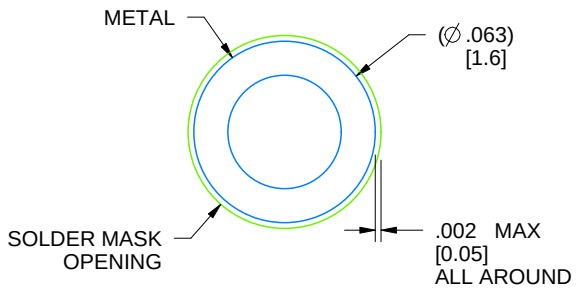

DETAIL B
13X, SCALE: 15X

4214771/A 05/2017

N (R–PDIP–T**)

PLASTIC DUAL–IN–LINE PACKAGE

16 PINS SHOWN

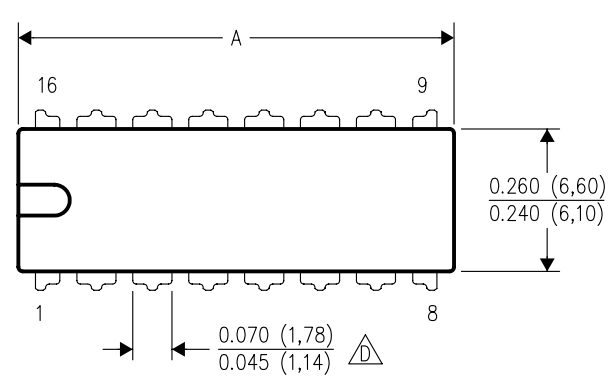

DIM \ PINS **	14	16	18	20
A MAX	0.775 (19,69)	0.775 (19,69)	0.920 (23,37)	1.060 (26,92)
A MIN	0.745 (18,92)	0.745 (18,92)	0.850 (21,59)	0.940 (23,88)
MS–001 VARIATION (C)	AA	BB	AC	AD

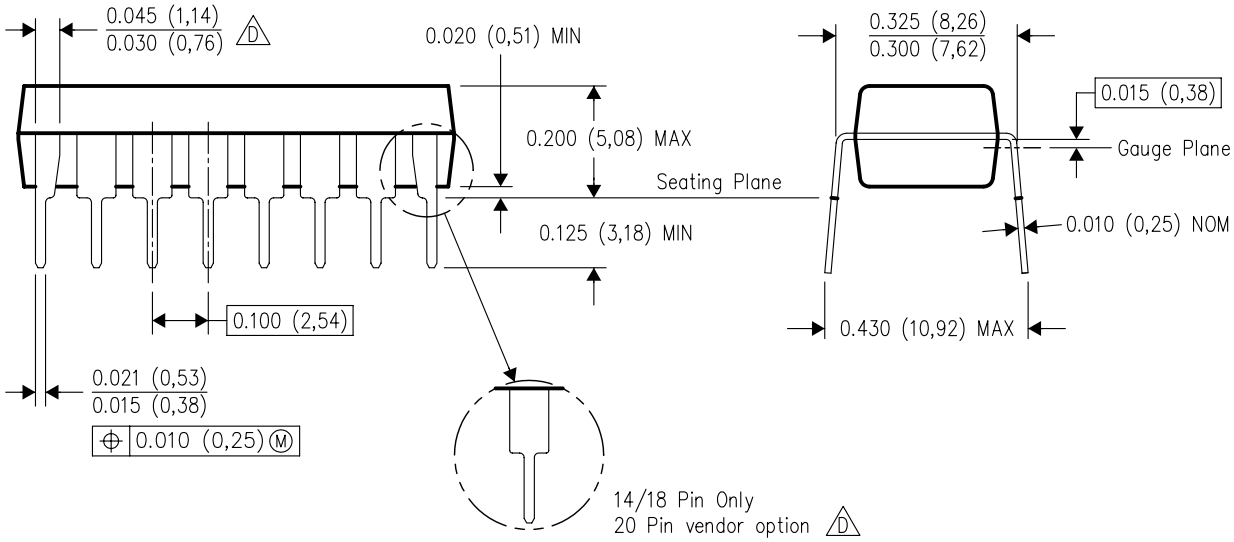

4040049/E 12/2002

NOTES:
A. All linear dimensions are in inches (millimeters).
B. This drawing is subject to change without notice.
C. Falls within JEDEC MS–001, except 18 and 20 pin minimum body length (Dim A).
D. The 20 pin end lead shoulder width is a vendor option, either half or full width.

PACKAGE OUTLINE

PW0014A

TSSOP - 1.2 mm max height

SMALL OUTLINE PACKAGE

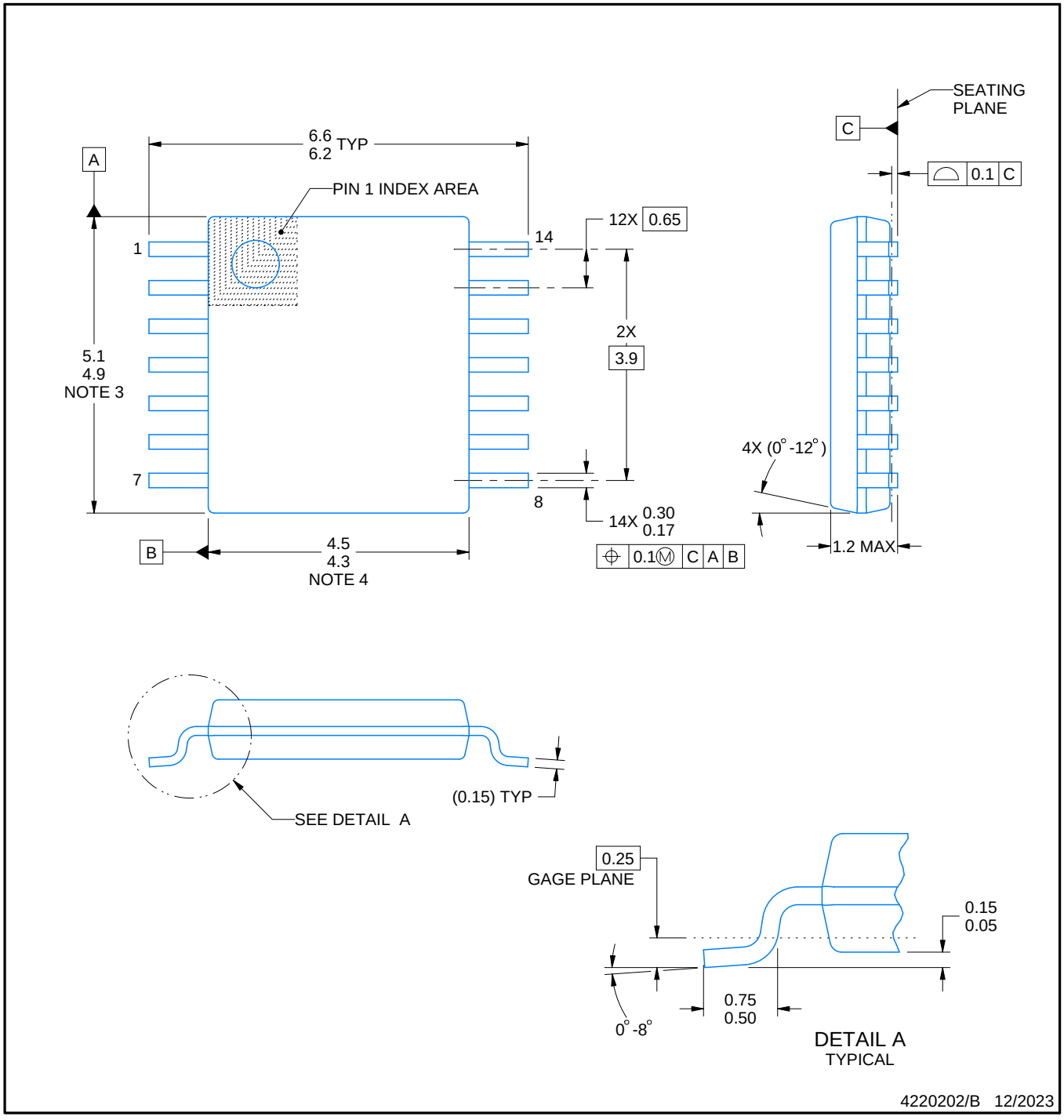

NOTES:

1. All linear dimensions are in millimeters. Any dimensions in parenthesis are for reference only. Dimensioning and tolerancing per ASME Y14.5M.
2. This drawing is subject to change without notice.
3. This dimension does not include mold flash, protrusions, or gate burrs. Mold flash, protrusions, or gate burrs shall not exceed 0.15 mm per side.
4. This dimension does not include interlead flash. Interlead flash shall not exceed 0.25 mm per side.
5. Reference JEDEC registration MO-153.

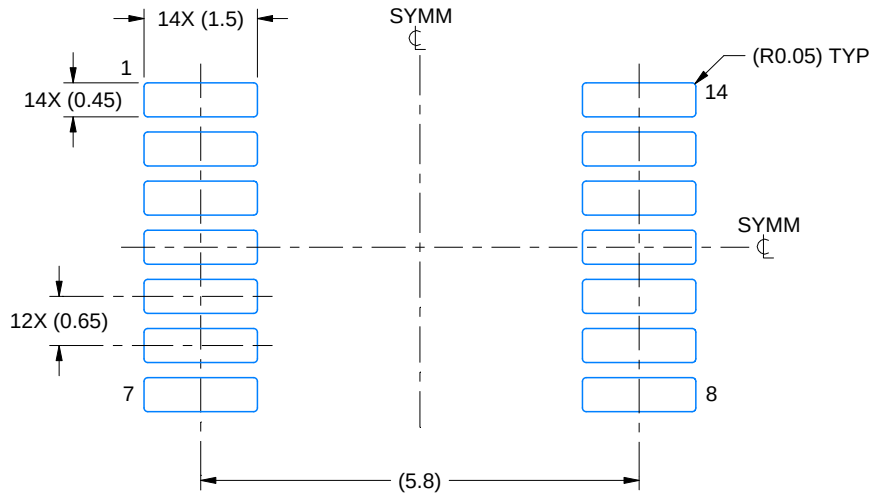

LAND PATTERN EXAMPLE
EXPOSED METAL SHOWN
SCALE: 10X

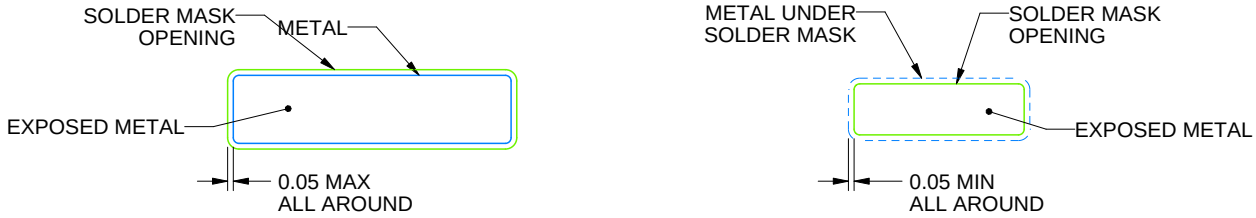

SOLDER MASK DETAILS

4220202/B 12/2023

NOTES: (continued)

6. Publication IPC-7351 may have alternate designs.
7. Solder mask tolerances between and around signal pads can vary based on board fabrication site.

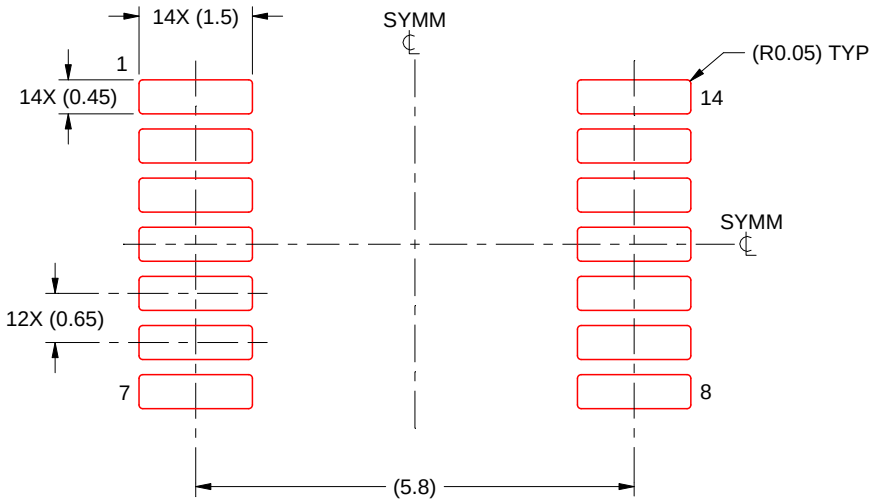

SOLDER PASTE EXAMPLE
BASED ON 0.125 mm THICK STENCIL
SCALE: 10X

4220202/B 12/2023

NOTES: (continued)

8. Laser cutting apertures with trapezoidal walls and rounded corners may offer better paste release. IPC-7525 may have alternate design recommendations.
9. Board assembly site may have different recommendations for stencil design.

重要なお知らせと免責事項

TI は、技術データと信頼性データ (データシートを含みます)、設計リソース (リファレンス デザインを含みます)、アプリケーションや設計に関する各種アドバイス、Web ツール、安全性情報、その他のリソースを、欠陥が存在する可能性のある「現状のまま」提供しており、商品性および特定目的に対する適合性の黙示保証、第三者の知的財産権の非侵害保証を含むいかなる保証も、明示的または黙示的にかかわらず拒否します。

これらのリソースは、TI 製品を使用する設計の経験を積んだ開発者への提供を意図したものです。(1) お客様のアプリケーションに適した TI 製品の選定、(2) お客様のアプリケーションの設計、検証、試験、(3) お客様のアプリケーションに該当する各種規格や、その他のあらゆる安全性、セキュリティ、規制、または他の要件への確実な適合に関する責任を、お客様のみが単独で負うものとします。

上記の各種リソースは、予告なく変更される可能性があります。これらのリソースは、リソースで説明されている TI 製品を使用するアプリケーションの開発の目的でのみ、TI はその使用をお客様に許諾します。これらのリソースに関して、他の目的で複製することや掲載することは禁止されています。TI や第三者の知的財産権のライセンスが付与されている訳ではありません。お客様は、これらのリソースを自身で使用した結果発生するあらゆる申し立て、損害、費用、損失、責任について、TI およびその代理人を完全に補償するものとし、TI は一切の責任を拒否します。

TI の製品は、 TI の販売条件 、 TI の総合的な品質ガイドライン 、 ti.com または TI 製品などに関連して提供される他の適用条件に従い提供されます。TI がこれらのリソースを提供することは、適用される TI の保証または他の保証の放棄の拡大や変更を意味するものではありません。 TI がカスタム、またはカスタマー仕様として明示的に指定していない限り、TI の製品は標準的なカタログに掲載される汎用機器です。

お客様がいかなる追加条項または代替条項を提案する場合も、TI はそれらに異議を唱え、拒否します。

Copyright © 2026, Texas Instruments Incorporated

最終更新日：2025 年 10 月