SN74HC10, SN54HC10
JAJSPQ5E – DECEMBER 1982 – REVISED APRIL 2021

SNx4HC10 トリプル 3 入力 NAND ゲート

1 特長

- バッファ付き入力
- 広い動作電圧範囲:2V～6V
- 広い動作温度範囲:
  -40℃～+85℃
- 最大 10 個の LSTTL 負荷ファンアウトに対応
- LSTTL ロジック IC に比べて消費電力を大幅削減

2 アプリケーション

- アラーム / タンパ検出回路
- S-R ラッチ

3 概要

このデバイスには、3 つの独立した 3 入力 NAND ゲートが内蔵されています。各ゲートはブール関数 $Y = \overline{A \bullet B \bullet C}$ を正論理で実行します。

製品情報 (1)

部品番号	パッケージ	本体サイズ (公称)
SN74HC10D	SOIC (14)	8.70mm × 3.90mm
SN74HC10N	PDIP (14)	19.30mm × 6.40mm
SN74HC10NS	SO (14)	10.20mm × 5.30mm
SN74HC10PW	TSSOP (14)	5.00mm × 4.40mm
SN54HC10J	CDIP (14)	21.30mm × 7.60mm
SN54HC10FK	LCCC (20)	8.90mm × 8.90mm

(1) 利用可能なパッケージについては、このデータシートの末尾にある注文情報を参照してください。

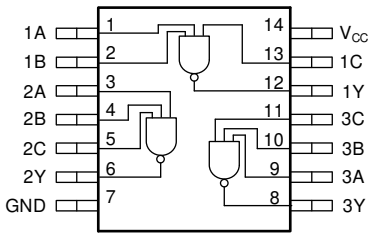

機能とピン配置

英語版の TI 製品についての情報を翻訳したこの資料は、製品の概要を確認する目的で便宜的に提供しているものです。該当する正式な英語版の最新情報は、www.ti.com で閲覧でき、その内容が常に優先されます。TI では翻訳の正確性および妥当性につきましては一切保証いたしません。実際の設計などの前には、必ず最新版の英語版をご参照くださいますようお願いいたします。

Table of Contents

1 特長 ... 1
2 アプリケーション ... 1
3 概要 ... 1
4 Revision History ... 2
5 Pin Configuration and Functions ... 3
Pin Functions ... 3
6 Specifications ... 4
6.1 Absolute Maximum Ratings ... 4
6.2 Recommended Operating Conditions ... 4
6.3 Thermal Information ... 4
6.4 Electrical Characteristics - 74 ... 5
6.5 Electrical Characteristics - 54 ... 5
6.6 Switching Characteristics - 74 ... 6
6.7 Switching Characteristics - 54 ... 6
6.8 Operating Characteristics ... 6
6.9 Typical Characteristics ... 6
7 Parameter Measurement Information ... 8
8 Detailed Description ... 9
8.1 Overview ... 9
8.2 Functional Block Diagram ... 9
8.3 Feature Description ... 9
8.4 Device Functional Modes ... 10
9 Application and Implementation ... 11
9.1 Application Information ... 11
9.2 Typical Application ... 11
10 Power Supply Recommendations ... 13
11 Layout ... 13
11.1 Layout Guidelines ... 13
11.2 Layout Example ... 13
12 Device and Documentation Support ... 14
12.1 Documentation Support ... 14
12.2 Related Links ... 14
12.3 サポート・リソース ... 14
12.4 Trademarks ... 14
12.5 静電気放電に関する注意事項 ... 14
12.6 用語集 ... 14
13 Mechanical, Packaging, and Orderable Information ... 14

4 Revision History

資料番号末尾の英字は改訂を表しています。その改訂履歴は英語版に準じています。

Changes from Revision D (August 2003) to Revision E (April 2021)	Page
• 文書全体にわたって表、図、相互参照の採番方法を更新	1
• 新しいデータシート標準に更新	1
• $R_{\theta JA}$ increased for the D, DB, and PW packages and decreased for the N and NS packages	4

Copyright © 2023 Texas Instruments Incorporated

5 Pin Configuration and Functions

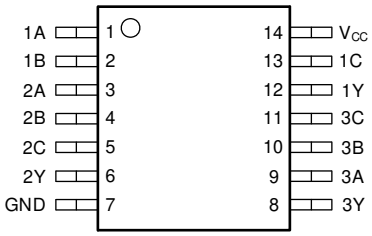

図 5-1. D, N, NS, PW, or J Package 14-Pin SOIC, PDIP, SO, TSSOP, or CDIP Top View

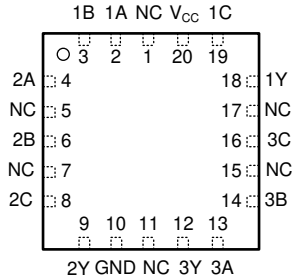

図 5-2. FK Package 20-Pin LCCC Top View

Pin Functions

PIN			I/O	DESCRIPTION
NAME	D, N, NS, PW, or J	FK		
1A	1	2	Input	Channel 1, Input A
1B	2	3	Input	Channel 1, Input B
2A	3	4	Input	Channel 2, Input A
2B	4	6	Input	Channel 2, Input B
2C	5	8	Input	Channel 2, Input C
2Y	6	9	Output	Channel 2, Output Y
GND	7	10	—	Ground
3Y	8	12	Output	Channel 3, Output Y
3A	9	13	Input	Channel 3, Input A
3B	10	14	Input	Channel 3, Input B
3C	11	16	Input	Channel 3, Input C
1Y	12	18	Output	Channel 1, Output Y
1C	13	19	Input	Channel 1, Input C
V_{CC}	14	20	—	Positive Supply
NC		1, 5, 7, 11, 15, 17	—	Not internally connected

Copyright © 2023 Texas Instruments Incorporated

6 Specifications

6.1 Absolute Maximum Ratings

over operating free-air temperature range (unless otherwise noted)(1)

			MIN	MAX	UNIT
V_{CC}	Supply voltage		–0.5	7	V
I_{IK}	Input clamp current(2)	$V_I < 0$ or $V_I > V_{CC}$		±20	mA
I_{OK}	Output clamp current(2)	$V_O < 0$ or $V_O > V_{CC}$		±20	mA
I_O	Continuous output current	$V_O = 0$ to V_{CC}		±25	mA
	Continuous current through V_{CC} or GND			±50	mA
T_J	Junction temperature(3)			150	°C
T_{stg}	Storage temperature		–65	150	°C

(1) Stresses beyond those listed under *Absolute Maximum Rating* may cause permanent damage to the device. These are stress ratings only, which do not imply functional operation of the device at these or any other conditions beyond those indicated under *Recommended Operating Condition*. Exposure to absolute-maximum-rated conditions for extended periods may affect device reliability.
(2) The input and output voltage ratings may be exceeded if the input and output current ratings are observed.
(3) Guaranteed by design.

6.2 Recommended Operating Conditions

over operating free-air temperature range (unless otherwise noted)

			MIN	NOM	MAX	UNIT
V_{CC}	Supply voltage		2	5	6	V
V_{IH}	High-level input voltage	V_{CC} = 2 V	1.5			V
		V_{CC} = 4.5 V	3.15			
		V_{CC} = 6 V	4.2			
V_{IL}	Low-level input voltage	V_{CC} = 2 V			0.5	V
		V_{CC} = 4.5 V			1.35	
		V_{CC} = 6 V			1.8	
V_I	Input voltage		0		V_{CC}	V
V_O	Output voltage		0		V_{CC}	V
Δt/Δv	Input transition rise and fall rate	V_{CC} = 2 V			1000	ns
		V_{CC} = 4.5 V			500	
		V_{CC} = 6 V			400	
T_A	Operating free-air temperature	SN54HC10	–55		125	°C
		SN74HC10	–40		85	

6.3 Thermal Information

THERMAL METRIC(1)		SN74HC10					UNIT
		D (SOIC)	DB (SSOP)	N (PDIP)	NS (SOP)	PW (TSSOP)	
		14 PINS	14 PINS	14 PINS	14 PINS	14 PINS	
$R_{\theta JA}$	Junction-to-ambient thermal resistance	133.6		67.5	122.6	151.7	°C/W
$R_{\theta JC(top)}$	Junction-to-case (top) thermal resistance	89.0		55.6	81.8	79.4	°C/W
$R_{\theta JB}$	Junction-to-board thermal resistance	89.5		47.2	83.8	94.7	°C/W
Ψ_{JT}	Junction-to-top characterization parameter	45.5		35.6	45.4	25.2	°C/W
Ψ_{JB}	Junction-to-board characterization parameter	89.1		47.0	83.4	94.1	°C/W

Copyright © 2023 Texas Instruments Incorporated

THERMAL METRIC(1)		SN74HC10					UNIT
		D (SOIC)	DB (SSOP)	N (PDIP)	NS (SOP)	PW (TSSOP)	
		14 PINS	14 PINS	14 PINS	14 PINS	14 PINS	
$R_{\theta JC(bot)}$	Junction-to-case (bottom) thermal resistance	N/A	N/A	N/A	N/A	N/A	°C/W

(1) For more information about traditional and new thermal metrics, see the Semiconductor and IC Package Thermal Metrics application report.

6.4 Electrical Characteristics - 74

over operating free-air temperature range; typical values measured at T_A = 25°C (unless otherwise noted).

PARAMETER		TEST CONDITIONS		V_{CC}	Operating free-air temperature (T_A)						UNIT
					25°C			-40°C to 85°C			
					MIN	TYP	MAX	MIN	TYP	MAX	
V_{OH}	High-level output voltage	V_I = V_{IH} or V_{IL}	I_{OH} = -20 µA	2 V	1.9	1.998		1.9			V
				4.5 V	4.4	4.499		4.4			
				6 V	5.9	5.999		5.9			
			I_{OH} = -4 mA	4.5 V	3.98	4.3		3.84			
			I_{OH} = -5.2 mA	6 V	5.48	5.8		5.34			
V_{OL}	Low-level output voltage	V_I = V_{IH} or V_{IL}	I_{OL} = 20 µA	2 V		0.002	0.1			0.1	V
				4.5 V		0.001	0.1			0.1	
			I_{OL} = 20 µA	6 V		0.001	0.1			0.1	
			I_{OL} = 4 mA	4.5 V		0.17	0.26			0.33	
			I_{OL} = 5.2 mA	6 V		0.15	0.26			0.33	
I_I	Input leakage current	V_I = V_{CC} or 0		6 V			±0.1			±1	µA
I_{CC}	Supply current	V_I = V_{CC} or 0	V_I = V_{CC} or 0	6 V			2			20	µA
C_i	Input capacitance			2 V to 6 V		3	10			10	pF

6.5 Electrical Characteristics - 54

over operating free-air temperature range; typical values measured at TA = 25°C (unless otherwise noted).

PARAMETER		TEST CONDITIONS		V_{CC}	Operating free-air temperature (T_A)									UNIT
					25°C			–40°C to 85°C			–55°C to 125°C			
					MIN	TYP	MAX	MIN	TYP	MAX	MIN	TYP	MAX	
V_{OH}	High-level output voltage	V_I = V_{IH} or V_{IL}	I_{OH} = –20 µA	2 V	1.9	1.998		1.9			1.9			V
				4.5 V	4.4	4.499		4.4			4.4			
				6 V	5.9	5.999		5.9			5.9			
			I_{OH} = –4 mA	4.5 V	3.98	4.3								
			I_{OH} = –5.2 mA	6 V	5.48	5.8								
V_{OL}	Low-level output voltage	V_I = V_{IH} or V_{IL}	I_{OL} = 20 µA	2 V		0.002	0.1			0.1			0.1	V
				4.5 V		0.001	0.1			0.1			0.1	
				6 V		0.001	0.1			0.1			0.1	
			I_{OL} = 4 mA	4.5 V		0.17	0.26			0.33			0.4	
			I_{OL} = 5.2 mA	6 V		0.15	0.26			0.33			0.4	
I_I	Input leakage current	V_I = V_{CC} or 0		6 V			±0.1			±1			±1	µA

Copyright © 2023 Texas Instruments Incorporated

over operating free-air temperature range; typical values measured at TA = 25°C (unless otherwise noted).

PARAMETER		TEST CONDITIONS		V_{CC}	Operating free-air temperature (T_A)									UNIT
					25°C			–40°C to 85°C			–55°C to 125°C			
					MIN	TYP	MAX	MIN	TYP	MAX	MIN	TYP	MAX	
I_{CC}	Supply current	V_I = V_{CC} or 0	I_O = 0	6 V			2			20			40	μA
C_i	Input capacitance			2 V to 6 V		3	10			10			10	pF

6.6 Switching Characteristics - 74

over operating free-air temperature range (unless otherwise noted)

PARAMETER		FROM	TO	V_{CC}	Operating free-air temperature (T_A)						UNIT
					25°C			–40°C to 85°C			
					MIN	TYP	MAX	MIN	TYP	MAX	
t_{pd}	Propagation delay	A, B, or C	Y	2 V		35	95			120	ns
				4.5 V		10	19			24	
				6 V		9	16			20	
t_t	Transition-time		Y	2 V		23	75			95	ns
				4.5 V		6	15			19	
				6 V		5	13			16	

6.7 Switching Characteristics - 54

over operating free-air temperature range; typical values measured at TA = 25°C (unless otherwise noted).

PARAMETER		FROM	TO	V_{CC}	Operating free-air temperature (T_A)									UNIT
					25°C			–40°C to 85°C			–55°C to 125°C			
					MIN	TYP	MAX	MIN	TYP	MAX	MIN	TYP	MAX	
t_{pd}	Propagation delay	A , B, or C	Y	2 V		35	95			120			145	ns
				4.5 V		10	19			24			29	
				6 V		9	16			20			25	
t_t	Transition-time		Y	2 V		23	75			95			110	ns
				4.5 V		6	15			19			22	
				6 V		5	13			16			19	

6.8 Operating Characteristics

over operating free-air temperature range; typical values measured at T_A = 25°C (unless otherwise noted).

PARAMETER		TEST CONDITIONS	V_{CC}	MIN	TYP	MAX	UNIT
C_{pd}	Power dissipation capacitance per gate	No load	2 V to 6 V		25		pF

6.9 Typical Characteristics

T_A = 25°C

Copyright © 2023 Texas Instruments Incorporated

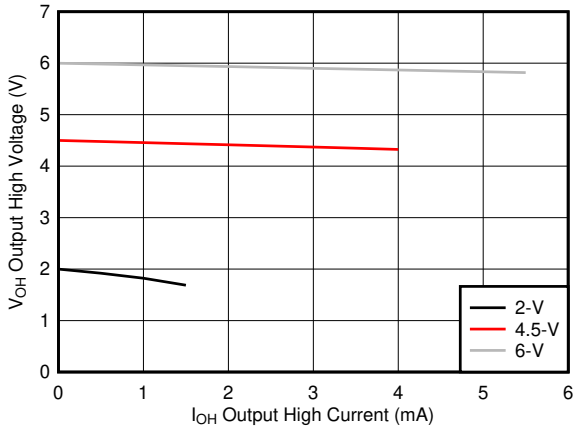

図 6-1. Typical output voltage in the high state (V_{OH})

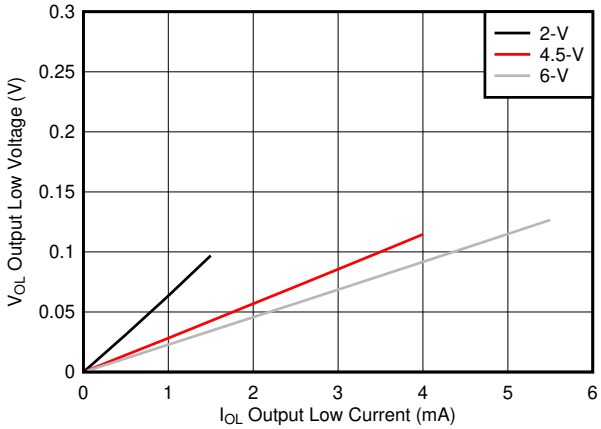

図 6-2. Typical output voltage in the low state (V_{OL})

Copyright © 2023 Texas Instruments Incorporated

7 Parameter Measurement Information

- Phase relationships between waveforms were chosen arbitrarily. All input pulses are supplied by generators having the following characteristics: PRR ≤ 1 MHz, Z_O = 50 Ω, t_t < 6 ns.
- The outputs are measured one at a time, with one input transition per measurement.

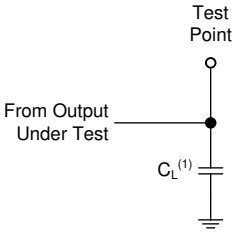

A. C_L= 50 pF and includes probe and jig capacitance.

図 7-1. Load Circuit

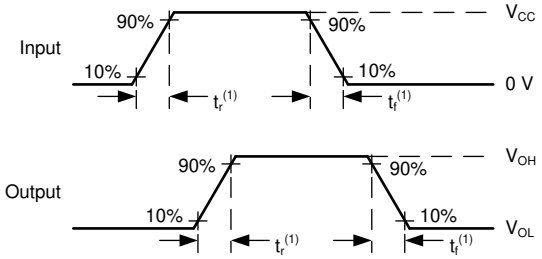

A. t_t is the greater of t_r and t_f.

図 7-2. Voltage Waveforms Transition Times

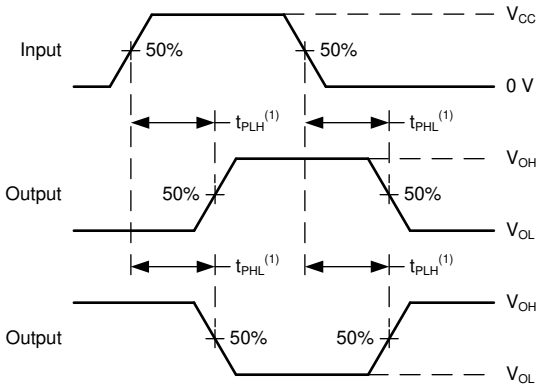

A. The maximum between t_{PLH} and t_{PHL} is used for t_{pd}.

図 7-3. Voltage Waveforms Propagation Delays

Copyright © 2023 Texas Instruments Incorporated

8 Detailed Description

8.1 Overview

This device contains three independent 3-input NAND gates. Each gate performs the Boolean function $Y = \overline{A \bullet B \bullet C}$ in positive logic.

8.2 Functional Block Diagram

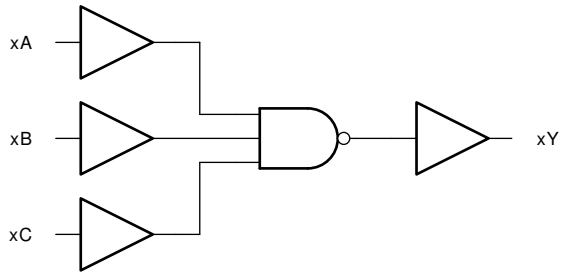

8.3 Feature Description

8.3.1 Balanced CMOS Push-Pull Outputs

A balanced output allows the device to sink and source similar currents. The drive capability of this device may create fast edges into light loads so routing and load conditions should be considered to prevent ringing. Additionally, the outputs of this device are capable of driving larger currents than the device can sustain without being damaged. It is important for the output power of the device to be limited to avoid damage due to over-current. The electrical and thermal limits defined in the *Absolute Maximum Ratings* must be followed at all times.

The SN74HC10 can drive a load with a total capacitance less than or equal to the maximum load listed in the *Switching Characteristics - 74* connected to a high-impedance CMOS input while still meeting all of the datasheet specifications. Larger capacitive loads can be applied, however it is not recommended to exceed the provided load value. If larger capacitive loads are required, it is recommended to add a series resistor between the output and the capacitor to limit output current to the values given in the *Absolute Maximum Ratings*.

8.3.2 Standard CMOS Inputs

Standard CMOS inputs are high impedance and are typically modeled as a resistor from the input to ground in parallel with the input capacitance given in the *Electrical Characteristics - 74*. The worst case resistance is calculated with the maximum input voltage, given in the *Absolute Maximum Ratings*, and the maximum input leakage current, given in the *Electrical Characteristics - 74*, using ohm's law (R = V ÷ I).

Signals applied to the inputs need to have fast edge rates, as defined by the input transition time in the *Recommended Operating Conditions* to avoid excessive current consumption and oscillations. If a slow or noisy input signal is required, a device with a Schmitt-trigger input should be used to condition the input signal prior to the standard CMOS input.

Copyright © 2023 Texas Instruments Incorporated

8.3.3 Clamp Diode Structure

The inputs and outputs to this device have both positive and negative clamping diodes as depicted in 図 8-1.

> **注意**
>
> Voltages beyond the values specified in the *セクション 6.1* table can cause damage to the device. The recommended input and output voltage ratings may be exceeded if the input and output clamp-current ratings are observed.

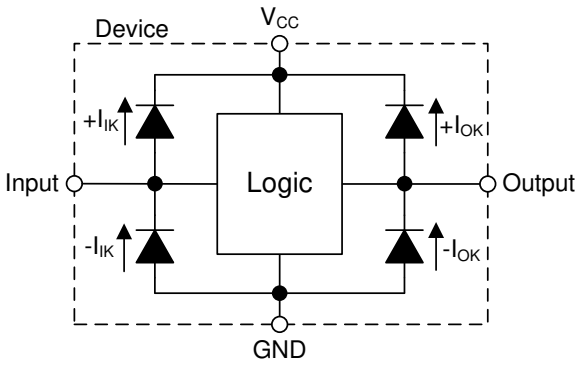

図 8-1. Electrical Placement of Clamping Diodes for Each Input and Output

8.4 Device Functional Modes

表 8-1. Function Table

INPUTS			OUTPUT
A	B	C	Y
H	H	H	L
L	X	X	H
X	L	X	H
X	X	L	H

Copyright © 2023 Texas Instruments Incorporated

9 Application and Implementation

注

以下のアプリケーション情報は、TI の製品仕様に含まれるものではなく、TI ではその正確性または完全性を保証いたしません。個々の目的に対する製品の適合性については、お客様の責任で判断していただくことになります。また、お客様は自身の設計実装を検証しテストすることで、システムの機能を確認する必要があります。

9.1 Application Information

In this application, two 3-input NAND gates are used to create an active-low SR latch as shown in 図 9-1. The additional gate can be used for another application, or the inputs can be grounded and the channel left unused.

This device is used to drive the tamper indicator LED and provide one bit of data to the system controller. When the tamper switch outputs LOW, the output Q becomes HIGH. This output remains HIGH until the system controller addresses the event and sends a LOW signal to the R input which returns the Q output back to LOW.

9.2 Typical Application

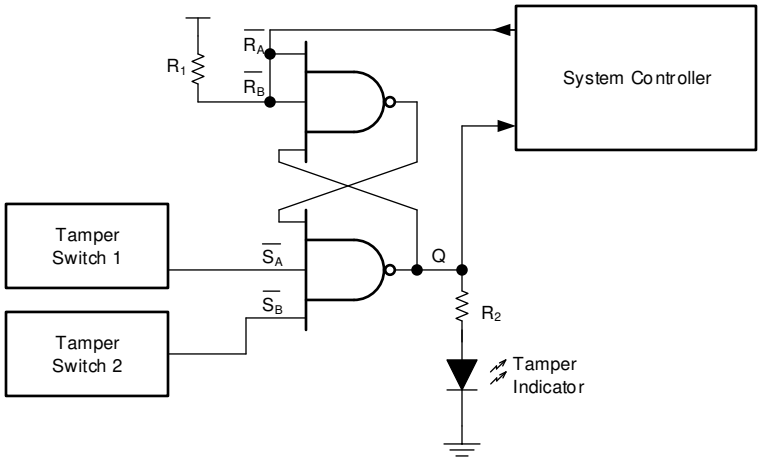

図 9-1. Typical application schematic

9.2.1 Design Requirements

9.2.1.1 Power Considerations

Ensure the desired supply voltage is within the range specified in the *Recommended Operating Conditions*. The supply voltage sets the device's electrical characteristics as described in the *Electrical Characteristics - 74*.

The supply must be capable of sourcing current equal to the total current to be sourced by all outputs of the SN74HC10 plus the maximum supply current, I_{CC}, listed in the *Electrical Characteristics - 74*. The logic device can only source or sink as much current as it is provided at the supply and ground pins, respectively. Be sure not to exceed the maximum total current through GND or V_{CC} listed in the *Absolute Maximum Ratings*.

Total power consumption can be calculated using the information provided in CMOS Power Consumption and C_{pd} Calculation.

Thermal increase can be calculated using the information provided in Thermal Characteristics of Standard Linear and Logic (SLL) Packages and Devices.

Copyright © 2023 Texas Instruments Incorporated

注意

The maximum junction temperature, T_J(max) listed in the *Absolute Maximum Ratings*, is an *additional limitation* to prevent damage to the device. Do not violate any values listed in the *Absolute Maximum Ratings*. These limits are provided to prevent damage to the device.

9.2.1.2 Input Considerations

Unused inputs must be terminated to either V_{CC} or ground. These can be directly terminated if the input is completely unused, or they can be connected with a pull-up or pull-down resistor if the input is to be used sometimes, but not always. A pull-up resistor is used for a default state of HIGH, and a pull-down resistor is used for a default state of LOW. The resistor size is limited by drive current of the controller, leakage current into the SN74HC10, as specified in the *Electrical Characteristics - 74*, and the desired input transition rate. A 10-kΩ resistor value is often used due to these factors.

The SN74HC10 has standard CMOS inputs, so input signal edge rates cannot be slow. Slow input edge rates can cause oscillations and damaging shoot-through current. The recommended rates are defined in the *Recommended Operating Conditions*.

Refer to *セクション 8.3* for additional information regarding the inputs for this device.

9.2.1.3 Output Considerations

The positive supply voltage is used to produce the output HIGH voltage. Drawing current from the output will decrease the output voltage as specified by the V_{OH} specification in the *Electrical Characteristics - 74*. Similarly, the ground voltage is used to produce the output LOW voltage. Sinking current into the output will increase the output voltage as specified by the V_{OL} specification in the *Electrical Characteristics - 74*.

Unused outputs can be left floating. Do not connect outputs directly to V_{CC} or ground.

Refer to *セクション 8.3* for additional information regarding the outputs for this device.

9.2.2 Detailed Design Procedure

1. Add a decoupling capacitor from V_{CC} to GND. The capacitor needs to be placed physically close to the device and electrically close to both the V_{CC} and GND pins. An example layout is shown in *セクション 11*.
2. Ensure the capacitive load at the output is ≤ 70 pF. This is not a hard limit, however it will ensure optimal performance. This can be accomplished by providing short, appropriately sized traces from the SN74HC10 to the receiving device.
3. Ensure the resistive load at the output is larger than (V_{CC} / I_O(max)) Ω. This will ensure that the maximum output current from the *Absolute Maximum Ratings* is not violated. Most CMOS inputs have a resistive load measured in megaohms; much larger than the minimum calculated above.
4. Thermal issues are rarely a concern for logic gates, however the power consumption and thermal increase can be calculated using the steps provided in the application report, CMOS Power Consumption and Cpd Calculation

9.2.3 Application Curves

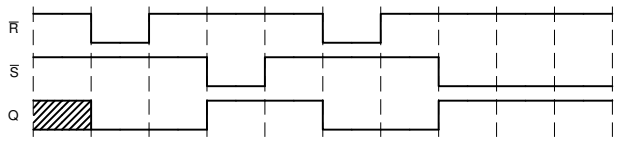

図 9-2. Typical application timing diagram

Copyright © 2023 Texas Instruments Incorporated

10 Power Supply Recommendations

The power supply can be any voltage between the minimum and maximum supply voltage rating located in the セクション 6.2. Each V_{CC} terminal should have a bypass capacitor to prevent power disturbance. A 0.1-µF capacitor is recommended for this device. It is acceptable to parallel multiple bypass caps to reject different frequencies of noise. The 0.1-µF and 1-µF capacitors are commonly used in parallel. The bypass capacitor should be installed as close to the power terminal as possible for best results, as shown in 図 11-1.

11 Layout

11.1 Layout Guidelines

When using multiple-input and multiple-channel logic devices inputs must not ever be left floating. In many cases, functions or parts of functions of digital logic devices are unused; for example, when only two inputs of a triple-input AND gate are used. Such unused input pins must not be left unconnected because the undefined voltages at the outside connections result in undefined operational states. All unused inputs of digital logic devices must be connected to a logic high or logic low voltage, as defined by the input voltage specifications, to prevent them from floating. The logic level that must be applied to any particular unused input depends on the function of the device. Generally, the inputs are tied to GND or V_{CC}, whichever makes more sense for the logic function or is more convenient.

11.2 Layout Example

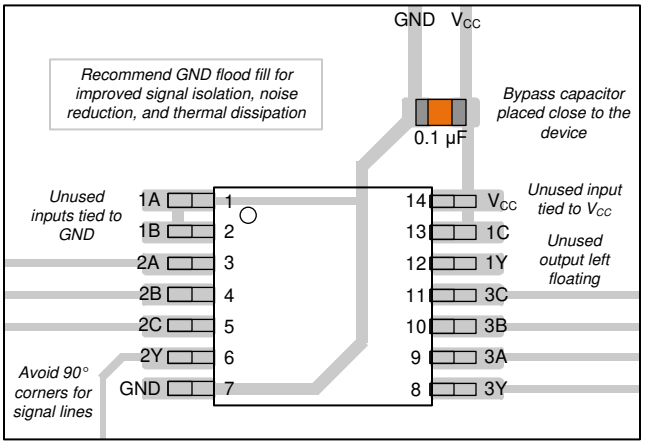

図 11-1. Example layout for the SN74HC10

12 Device and Documentation Support

12.1 Documentation Support

12.1.1 Related Documentation

For related documentation see the following:

- HCMOS Design Considerations
- CMOS Power Consumption and CPD Calculation
- Designing with Logic

12.2 Related Links

The table below lists quick access links. Categories include technical documents, support and community resources, tools and software, and quick access to sample or buy.

12.3 サポート・リソース

TI E2E™ サポート・フォーラムは、エンジニアが検証済みの回答と設計に関するヒントをエキスパートから迅速かつ直接得ることができる場所です。既存の回答を検索したり、独自の質問をしたりすることで、設計で必要な支援を迅速に得ることができます。

リンクされているコンテンツは、該当する貢献者により、現状のまま提供されるものです。これらは TI の仕様を構成するものではなく、必ずしも TI の見解を反映したものではありません。TI の使用条件を参照してください。

12.4 Trademarks

TI E2E™ is a trademark of Texas Instruments.
すべての商標は、それぞれの所有者に帰属します。

12.5 静電気放電に関する注意事項



この IC は、ESD によって破損する可能性があります。テキサス・インスツルメンツは、IC を取り扱う際には常に適切な注意を払うことを推奨します。正しい ESD 対策をとらないと、デバイスを破損するおそれがあります。

ESD による破損は、わずかな性能低下からデバイスの完全な故障まで多岐にわたります。精密な IC の場合、パラメータがわずかに変化するだけで公表されている仕様から外れる可能性があるため、破損が発生しやすくなっています。

12.6 用語集

TI 用語集　　この用語集には、用語や略語の一覧および定義が記載されています。

13 Mechanical, Packaging, and Orderable Information

The following pages include mechanical, packaging, and orderable information. This information is the most current data available for the designated devices. This data is subject to change without notice and revision of this document. For browser-based versions of this data sheet, refer to the left-hand navigation.

Copyright © 2023 Texas Instruments Incorporated

PACKAGING INFORMATION

Orderable part number	Status (1)	Material type (2)	Package | Pins	Package qty | Carrier	RoHS (3)	Lead finish/ Ball material (4)	MSL rating/ Peak reflow (5)	Op temp (°C)	Part marking (6)
5962-8403801VCA	Active	Production	CDIP (J) | 14	25 | TUBE	No	SNPB	N/A for Pkg Type	-55 to 125	5962-8403801VC A SNV54HC10J
5962-8403801VCA.A	Active	Production	CDIP (J) | 14	25 | TUBE	No	SNPB	N/A for Pkg Type	-55 to 125	5962-8403801VC A SNV54HC10J
84038012A	Active	Production	LCCC (FK) | 20	55 | TUBE	No	SNPB	N/A for Pkg Type	-55 to 125	84038012A SNJ54HC 10FK
8403801CA	Active	Production	CDIP (J) | 14	25 | TUBE	No	SNPB	N/A for Pkg Type	-55 to 125	8403801CA SNJ54HC10J
8403801DA	Active	Production	CFP (W) | 14	25 | TUBE	No	SNPB	N/A for Pkg Type	-55 to 125	8403801DA SNJ54HC10W
JM38510/65002B2A	Active	Production	LCCC (FK) | 20	55 | TUBE	No	SNPB	N/A for Pkg Type	-55 to 125	JM38510/ 65002B2A
JM38510/65002B2A.A	Active	Production	LCCC (FK) | 20	55 | TUBE	No	SNPB	N/A for Pkg Type	-55 to 125	JM38510/ 65002B2A
JM38510/65002BCA	Active	Production	CDIP (J) | 14	25 | TUBE	No	SNPB	N/A for Pkg Type	-55 to 125	JM38510/ 65002BCA
JM38510/65002BCA.A	Active	Production	CDIP (J) | 14	25 | TUBE	No	SNPB	N/A for Pkg Type	-55 to 125	JM38510/ 65002BCA
M38510/65002B2A	Active	Production	LCCC (FK) | 20	55 | TUBE	No	SNPB	N/A for Pkg Type	-55 to 125	JM38510/ 65002B2A
M38510/65002BCA	Active	Production	CDIP (J) | 14	25 | TUBE	No	SNPB	N/A for Pkg Type	-55 to 125	JM38510/ 65002BCA
SN54HC10J	Active	Production	CDIP (J) | 14	25 | TUBE	No	SNPB	N/A for Pkg Type	-55 to 125	SN54HC10J
SN54HC10J.A	Active	Production	CDIP (J) | 14	25 | TUBE	No	SNPB	N/A for Pkg Type	-55 to 125	SN54HC10J
SN74HC10D	Obsolete	Production	SOIC (D) | 14	-	-	Call TI	Call TI	-40 to 85	HC10
SN74HC10DR	Active	Production	SOIC (D) | 14	2500 | LARGE T&R	Yes	NIPDAU | SN	Level-1-260C-UNLIM	-40 to 85	HC10
SN74HC10DR.A	Active	Production	SOIC (D) | 14	2500 | LARGE T&R	Yes	NIPDAU	Level-1-260C-UNLIM	-40 to 85	HC10
SN74HC10DRG4	Active	Production	SOIC (D) | 14	2500 | LARGE T&R	Yes	NIPDAU	Level-1-260C-UNLIM	-40 to 85	HC10
SN74HC10DRG4.A	Active	Production	SOIC (D) | 14	2500 | LARGE T&R	Yes	NIPDAU	Level-1-260C-UNLIM	-40 to 85	HC10
SN74HC10DT	Obsolete	Production	SOIC (D) | 14	-	-	Call TI	Call TI	-40 to 85	HC10

Orderable part number	Status (1)	Material type (2)	Package | Pins	Package qty | Carrier	RoHS (3)	Lead finish/ Ball material (4)	MSL rating/ Peak reflow (5)	Op temp (°C)	Part marking (6)
SN74HC10N	Active	Production	PDIP (N) | 14	25 | TUBE	Yes	NIPDAU	N/A for Pkg Type	-40 to 85	SN74HC10N
SN74HC10N.A	Active	Production	PDIP (N) | 14	25 | TUBE	Yes	NIPDAU	N/A for Pkg Type	-40 to 85	SN74HC10N
SN74HC10NE4	Active	Production	PDIP (N) | 14	25 | TUBE	Yes	NIPDAU	N/A for Pkg Type	-40 to 85	SN74HC10N
SN74HC10NSR	Active	Production	SOP (NS) | 14	2000 | LARGE T&R	Yes	NIPDAU	Level-1-260C-UNLIM	-40 to 85	HC10
SN74HC10NSR.A	Active	Production	SOP (NS) | 14	2000 | LARGE T&R	Yes	NIPDAU	Level-1-260C-UNLIM	-40 to 85	HC10
SN74HC10NSRG4	Active	Production	SOP (NS) | 14	2000 | LARGE T&R	Yes	NIPDAU	Level-1-260C-UNLIM	-40 to 85	HC10
SN74HC10NSRG4.A	Active	Production	SOP (NS) | 14	2000 | LARGE T&R	Yes	NIPDAU	Level-1-260C-UNLIM	-40 to 85	HC10
SN74HC10PW	Obsolete	Production	TSSOP (PW) | 14	-	-	Call TI	Call TI	-40 to 85	HC10
SN74HC10PWR	Active	Production	TSSOP (PW) | 14	2000 | LARGE T&R	Yes	NIPDAU | SN	Level-1-260C-UNLIM	-40 to 85	HC10
SN74HC10PWR.A	Active	Production	TSSOP (PW) | 14	2000 | LARGE T&R	Yes	NIPDAU	Level-1-260C-UNLIM	-40 to 85	HC10
SN74HC10PWRG4	Active	Production	TSSOP (PW) | 14	2000 | LARGE T&R	Yes	NIPDAU	Level-1-260C-UNLIM	-40 to 85	HC10
SN74HC10PWRG4.A	Active	Production	TSSOP (PW) | 14	2000 | LARGE T&R	Yes	NIPDAU	Level-1-260C-UNLIM	-40 to 85	HC10
SN74HC10PWT	Obsolete	Production	TSSOP (PW) | 14	-	-	Call TI	Call TI	-40 to 85	HC10
SNJ54HC10FK	Active	Production	LCCC (FK) | 20	55 | TUBE	No	SNPB	N/A for Pkg Type	-55 to 125	84038012A SNJ54HC 10FK
SNJ54HC10FK.A	Active	Production	LCCC (FK) | 20	55 | TUBE	No	SNPB	N/A for Pkg Type	-55 to 125	84038012A SNJ54HC 10FK
SNJ54HC10J	Active	Production	CDIP (J) | 14	25 | TUBE	No	SNPB	N/A for Pkg Type	-55 to 125	8403801CA SNJ54HC10J
SNJ54HC10J.A	Active	Production	CDIP (J) | 14	25 | TUBE	No	SNPB	N/A for Pkg Type	-55 to 125	8403801CA SNJ54HC10J
SNJ54HC10W	Active	Production	CFP (W) | 14	25 | TUBE	No	SNPB	N/A for Pkg Type	-55 to 125	8403801DA SNJ54HC10W
SNJ54HC10W.A	Active	Production	CFP (W) | 14	25 | TUBE	No	SNPB	N/A for Pkg Type	-55 to 125	8403801DA SNJ54HC10W

(1) **Status:** For more details on status, see our product life cycle.

(2) **Material type:** When designated, preproduction parts are prototypes/experimental devices, and are not yet approved or released for full production. Testing and final process, including without limitation quality assurance, reliability performance testing, and/or process qualification, may not yet be complete, and this item is subject to further changes or possible discontinuation. If available for ordering, purchases will be subject to an additional waiver at checkout, and are intended for early internal evaluation purposes only. These items are sold without warranties of any kind.

(3) **RoHS values:** Yes, No, RoHS Exempt. See the TI RoHS Statement for additional information and value definition.

(4) **Lead finish/Ball material:** Parts may have multiple material finish options. Finish options are separated by a vertical ruled line. Lead finish/Ball material values may wrap to two lines if the finish value exceeds the maximum column width.

(5) **MSL rating/Peak reflow:** The moisture sensitivity level ratings and peak solder (reflow) temperatures. In the event that a part has multiple moisture sensitivity ratings, only the lowest level per JEDEC standards is shown. Refer to the shipping label for the actual reflow temperature that will be used to mount the part to the printed circuit board.

(6) **Part marking:** There may be an additional marking, which relates to the logo, the lot trace code information, or the environmental category of the part.

Multiple part markings will be inside parentheses. Only one part marking contained in parentheses and separated by a "~" will appear on a part. If a line is indented then it is a continuation of the previous line and the two combined represent the entire part marking for that device.

Important Information and Disclaimer: The information provided on this page represents TI's knowledge and belief as of the date that it is provided. TI bases its knowledge and belief on information provided by third parties, and makes no representation or warranty as to the accuracy of such information. Efforts are underway to better integrate information from third parties. TI has taken and continues to take reasonable steps to provide representative and accurate information but may not have conducted destructive testing or chemical analysis on incoming materials and chemicals. TI and TI suppliers consider certain information to be proprietary, and thus CAS numbers and other limited information may not be available for release.

In no event shall TI's liability arising out of such information exceed the total purchase price of the TI part(s) at issue in this document sold by TI to Customer on an annual basis.

OTHER QUALIFIED VERSIONS OF SN54HC10, SN54HC10-SP, SN74HC10 :

- Catalog : SN74HC10, SN54HC10
- Automotive : SN74HC10-Q1, SN74HC10-Q1
- Enhanced Product : SN74HC10-EP, SN74HC10-EP
- Military : SN54HC10
- Space : SN54HC10-SP

NOTE: Qualified Version Definitions:

- Catalog - TI's standard catalog product
- Automotive - Q100 devices qualified for high-reliability automotive applications targeting zero defects

- Enhanced Product - Supports Defense, Aerospace and Medical Applications
- Military - QML certified for Military and Defense Applications
- Space - Radiation tolerant, ceramic packaging and qualified for use in Space-based application

TAPE AND REEL INFORMATION

REEL DIMENSIONS

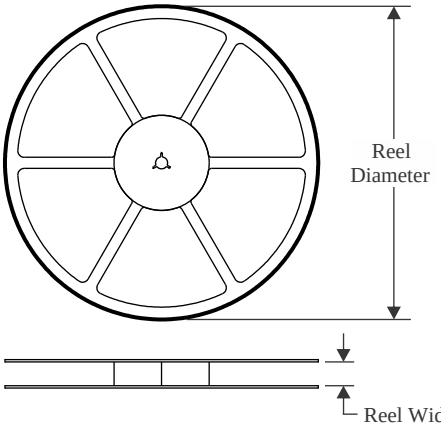

TAPE DIMENSIONS

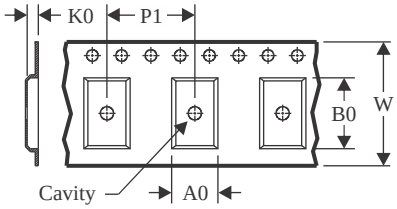

A0	Dimension designed to accommodate the component width
B0	Dimension designed to accommodate the component length
K0	Dimension designed to accommodate the component thickness
W	Overall width of the carrier tape
P1	Pitch between successive cavity centers

QUADRANT ASSIGNMENTS FOR PIN 1 ORIENTATION IN TAPE

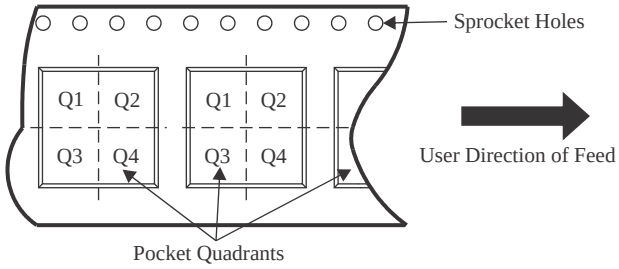

*All dimensions are nominal

Device	Package Type	Package Drawing	Pins	SPQ	Reel Diameter (mm)	Reel Width W1 (mm)	A0 (mm)	B0 (mm)	K0 (mm)	P1 (mm)	W (mm)	Pin1 Quadrant
SN74HC10DR	SOIC	D	14	2500	330.0	16.4	6.5	9.0	2.1	8.0	16.0	Q1
SN74HC10DRG4	SOIC	D	14	2500	330.0	16.4	6.5	9.0	2.1	8.0	16.0	Q1
SN74HC10NSR	SOP	NS	14	2000	330.0	16.4	8.45	10.55	2.5	12.0	16.2	Q1
SN74HC10NSRG4	SOP	NS	14	2000	330.0	16.4	8.45	10.55	2.5	12.0	16.2	Q1
SN74HC10PWR	TSSOP	PW	14	2000	330.0	12.4	6.9	5.6	1.6	8.0	12.0	Q1
SN74HC10PWRG4	TSSOP	PW	14	2000	330.0	12.4	6.9	5.6	1.6	8.0	12.0	Q1

TAPE AND REEL BOX DIMENSIONS

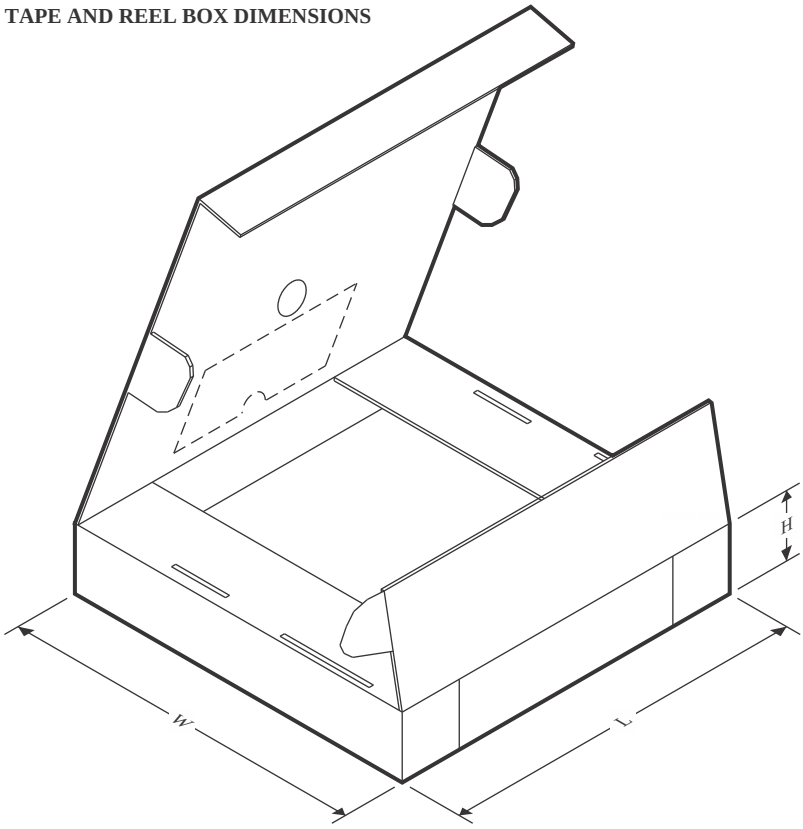

*All dimensions are nominal

Device	Package Type	Package Drawing	Pins	SPQ	Length (mm)	Width (mm)	Height (mm)
SN74HC10DR	SOIC	D	14	2500	353.0	353.0	32.0
SN74HC10DRG4	SOIC	D	14	2500	353.0	353.0	32.0
SN74HC10NSR	SOP	NS	14	2000	353.0	353.0	32.0
SN74HC10NSRG4	SOP	NS	14	2000	353.0	353.0	32.0
SN74HC10PWR	TSSOP	PW	14	2000	356.0	356.0	35.0
SN74HC10PWRG4	TSSOP	PW	14	2000	353.0	353.0	32.0

TUBE

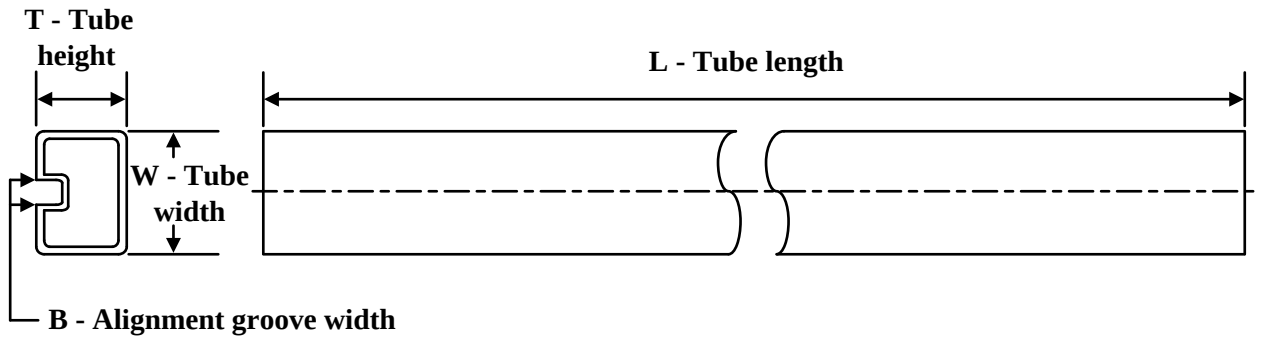

*All dimensions are nominal

Device	Package Name	Package Type	Pins	SPQ	L (mm)	W (mm)	T (µm)	B (mm)
84038012A	FK	LCCC	20	55	506.98	12.06	2030	NA
8403801DA	W	CFP	14	25	506.98	26.16	6220	NA
JM38510/65002B2A	FK	LCCC	20	55	506.98	12.06	2030	NA
JM38510/65002B2A.A	FK	LCCC	20	55	506.98	12.06	2030	NA
M38510/65002B2A	FK	LCCC	20	55	506.98	12.06	2030	NA
SN74HC10N	N	PDIP	14	25	506	13.97	11230	4.32
SN74HC10N	N	PDIP	14	25	506	13.97	11230	4.32
SN74HC10N.A	N	PDIP	14	25	506	13.97	11230	4.32
SN74HC10N.A	N	PDIP	14	25	506	13.97	11230	4.32
SN74HC10NE4	N	PDIP	14	25	506	13.97	11230	4.32
SN74HC10NE4	N	PDIP	14	25	506	13.97	11230	4.32
SNJ54HC10FK	FK	LCCC	20	55	506.98	12.06	2030	NA
SNJ54HC10FK.A	FK	LCCC	20	55	506.98	12.06	2030	NA
SNJ54HC10W	W	CFP	14	25	506.98	26.16	6220	NA
SNJ54HC10W.A	W	CFP	14	25	506.98	26.16	6220	NA

W (R–GDFP–F14) CERAMIC DUAL FLATPACK

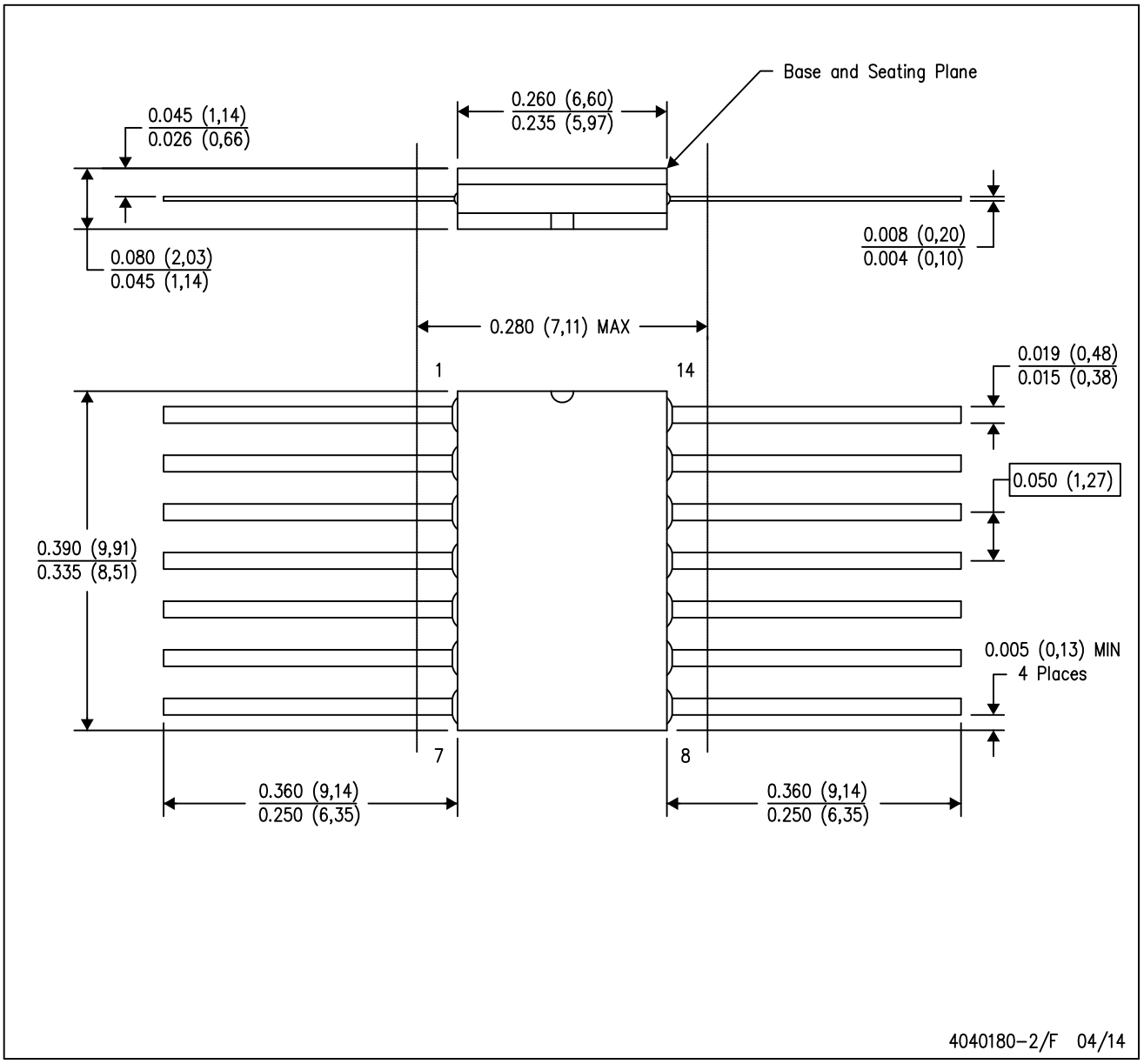

NOTES:
A. All linear dimensions are in inches (millimeters).
B. This drawing is subject to change without notice.
C. This package can be hermetically sealed with a ceramic lid using glass frit.
D. Index point is provided on cap for terminal identification only.
E. Falls within MIL STD 1835 GDFP1–F14

GENERIC PACKAGE VIEW

FK 20

LCCC - 2.03 mm max height

8.89 x 8.89, 1.27 mm pitch

LEADLESS CERAMIC CHIP CARRIER

This image is a representation of the package family, actual package may vary.
Refer to the product data sheet for package details.

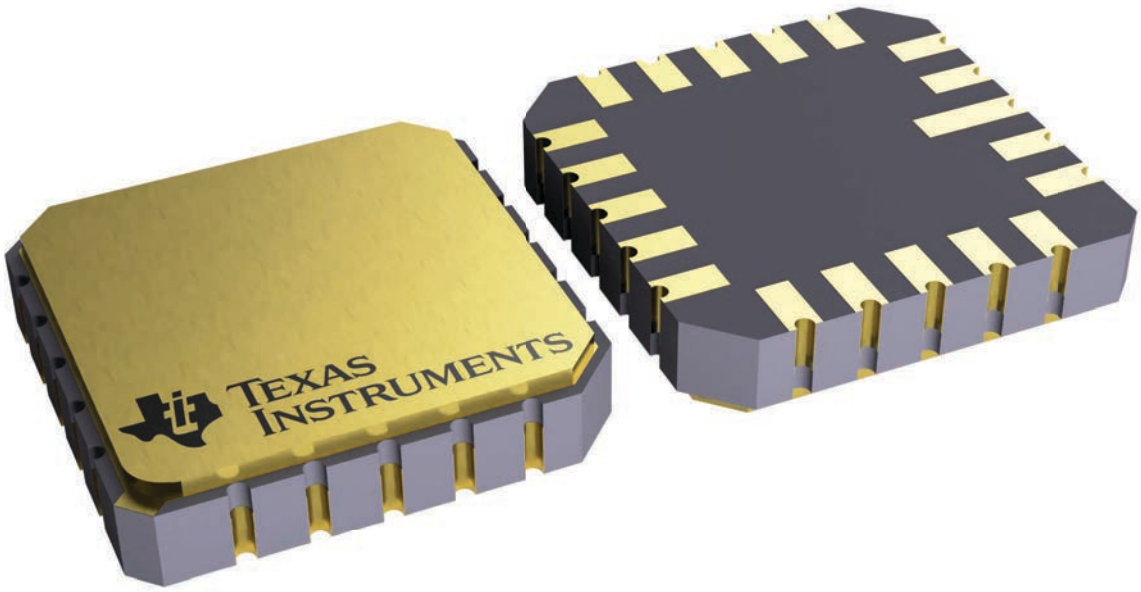

4229370VA\

GENERIC PACKAGE VIEW

J 14 CDIP - 5.08 mm max height

CERAMIC DUAL IN LINE PACKAGE

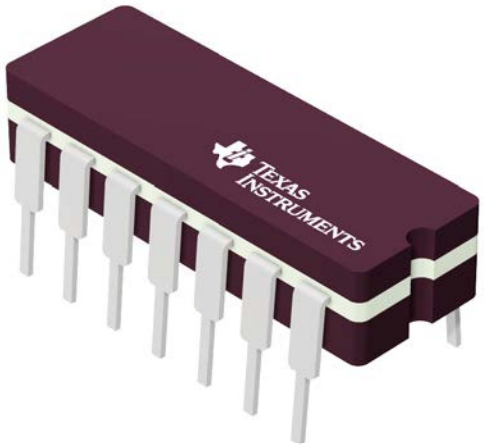

Images above are just a representation of the package family, actual package may vary.
Refer to the product data sheet for package details.

4040083-5/G



PACKAGE OUTLINE

J0014A

CDIP - 5.08 mm max height

CERAMIC DUAL IN LINE PACKAGE

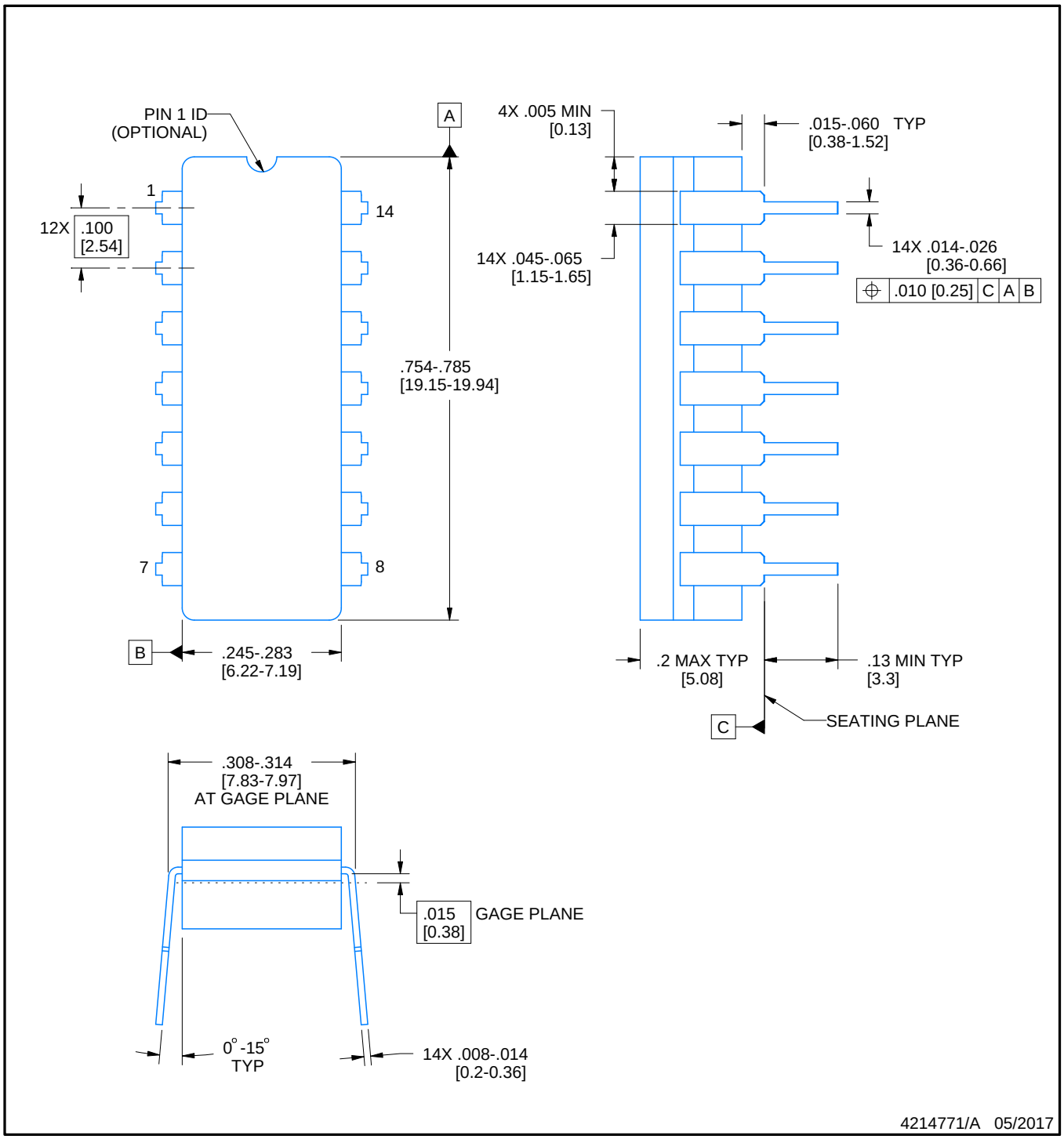

NOTES:

1. All controlling linear dimensions are in inches. Dimensions in brackets are in millimeters. Any dimension in brackets or parenthesis are for reference only. Dimensioning and tolerancing per ASME Y14.5M.
2. This drawing is subject to change without notice.
3. This package is hermitically sealed with a ceramic lid using glass frit.
4. Index point is provided on cap for terminal identification only and on press ceramic glass frit seal only.
5. Falls within MIL-STD-1835 and GDIP1-T14.

EXAMPLE BOARD LAYOUT

J0014A

CDIP - 5.08 mm max height

CERAMIC DUAL IN LINE PACKAGE

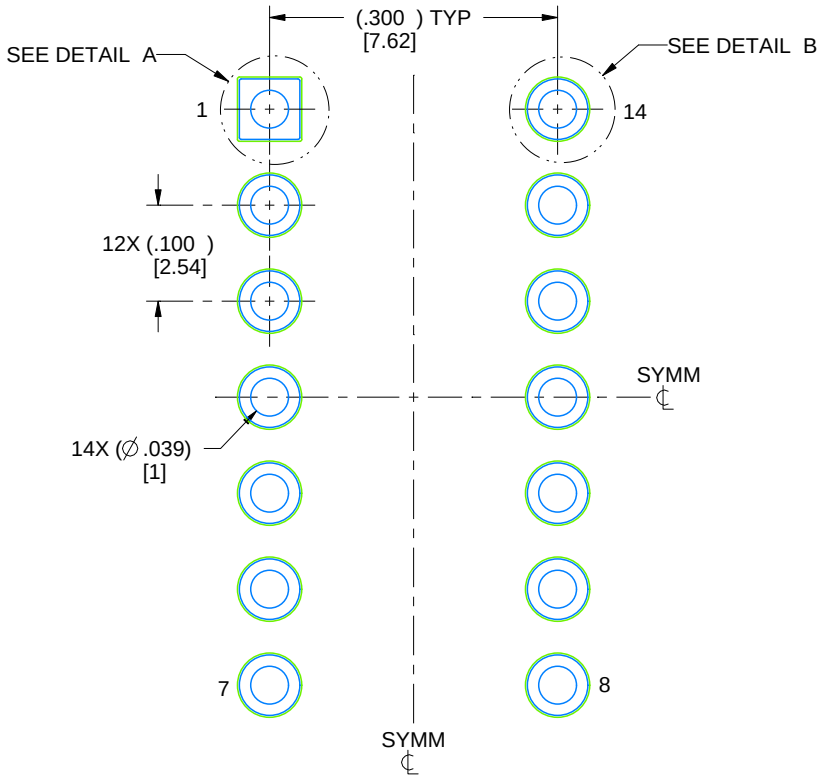

LAND PATTERN EXAMPLE
NON-SOLDER MASK DEFINED
SCALE: 5X

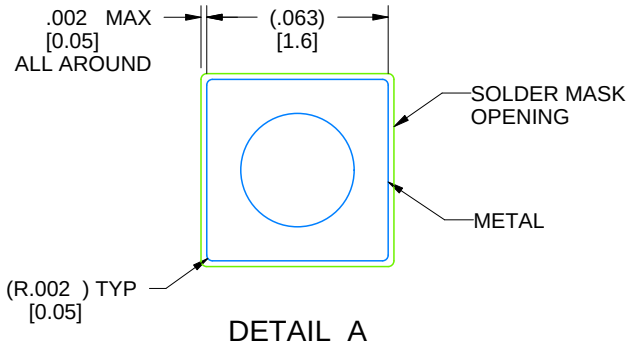

DETAIL A
SCALE: 15X

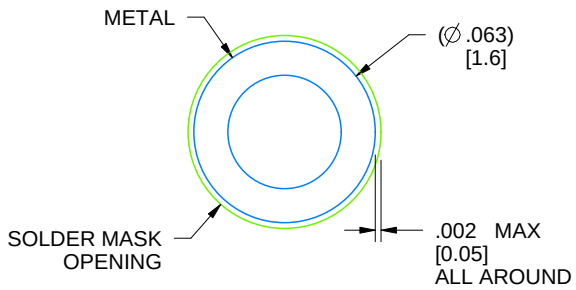

DETAIL B
13X, SCALE: 15X

4214771/A 05/2017

N (R–PDIP–T**)

PLASTIC DUAL–IN–LINE PACKAGE

16 PINS SHOWN

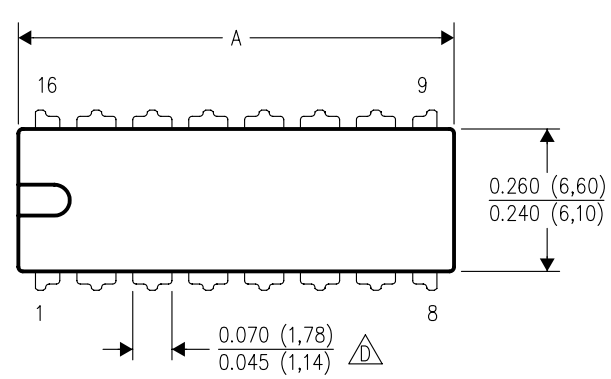

DIM \ PINS **	14	16	18	20
A MAX	0.775 (19,69)	0.775 (19,69)	0.920 (23,37)	1.060 (26,92)
A MIN	0.745 (18,92)	0.745 (18,92)	0.850 (21,59)	0.940 (23,88)
MS–001 VARIATION (C)	AA	BB	AC	AD

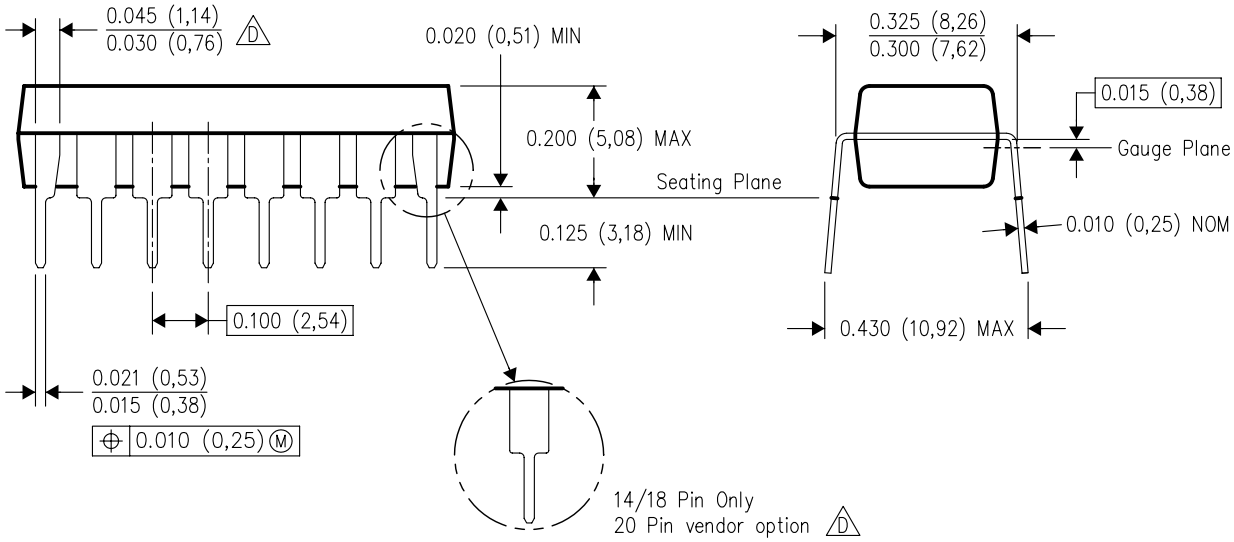

4040049/E 12/2002

NOTES:
A. All linear dimensions are in inches (millimeters).
B. This drawing is subject to change without notice.
C. Falls within JEDEC MS–001, except 18 and 20 pin minimum body length (Dim A).
D. The 20 pin end lead shoulder width is a vendor option, either half or full width.

PACKAGE OUTLINE

PW0014A

TSSOP - 1.2 mm max height

SMALL OUTLINE PACKAGE

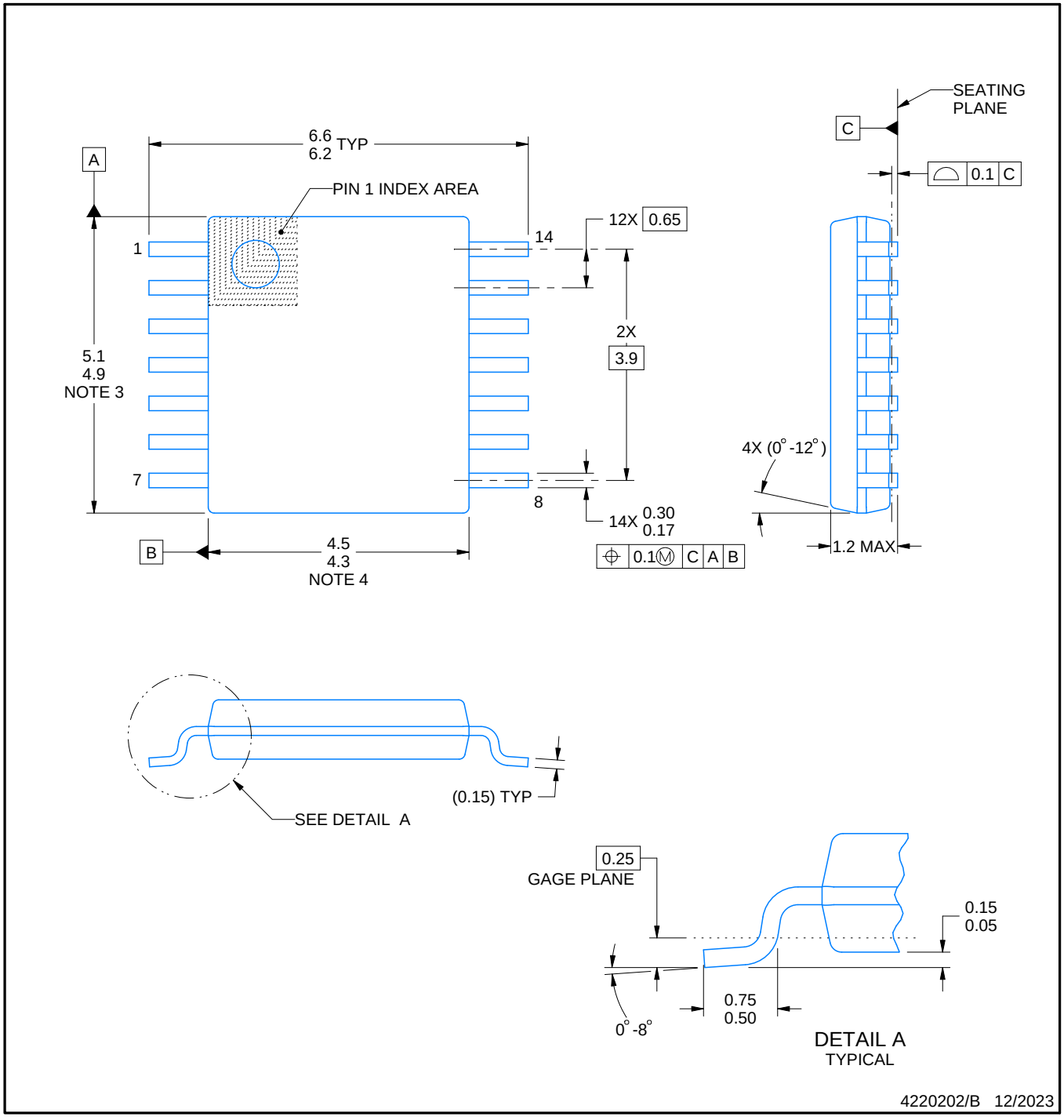

NOTES:

1. All linear dimensions are in millimeters. Any dimensions in parenthesis are for reference only. Dimensioning and tolerancing per ASME Y14.5M.
2. This drawing is subject to change without notice.
3. This dimension does not include mold flash, protrusions, or gate burrs. Mold flash, protrusions, or gate burrs shall not exceed 0.15 mm per side.
4. This dimension does not include interlead flash. Interlead flash shall not exceed 0.25 mm per side.
5. Reference JEDEC registration MO-153.

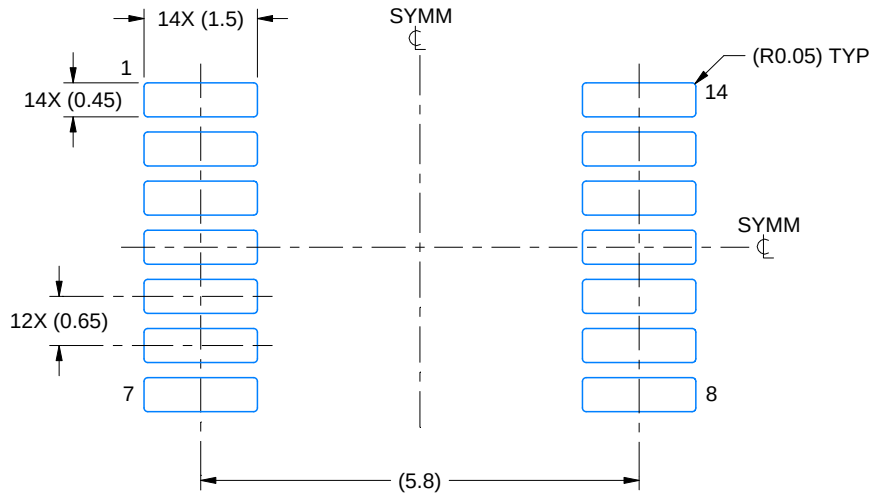

LAND PATTERN EXAMPLE
EXPOSED METAL SHOWN
SCALE: 10X

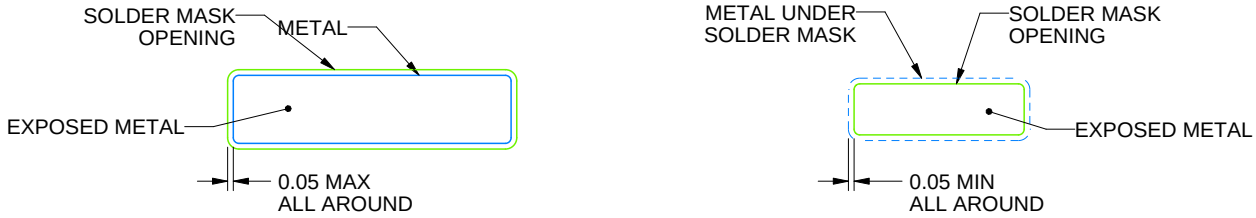

SOLDER MASK DETAILS

4220202/B 12/2023

NOTES: (continued)

6. Publication IPC-7351 may have alternate designs.
7. Solder mask tolerances between and around signal pads can vary based on board fabrication site.

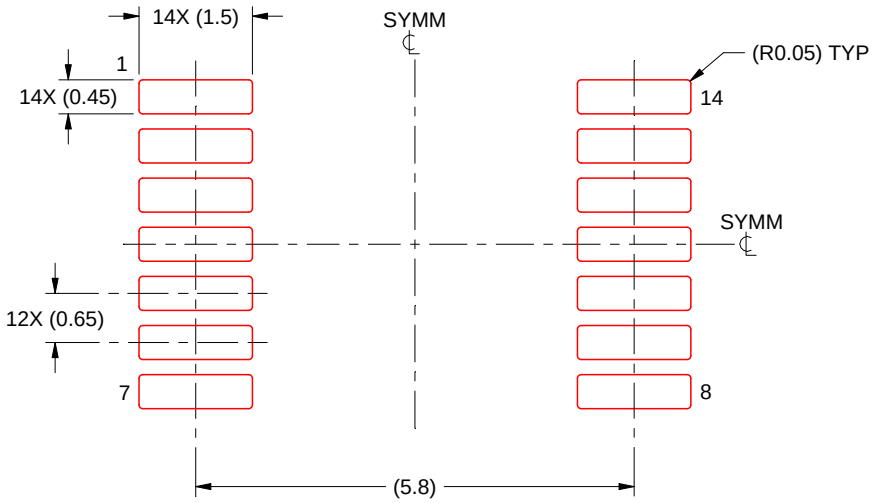

SOLDER PASTE EXAMPLE
BASED ON 0.125 mm THICK STENCIL
SCALE: 10X

4220202/B 12/2023

NOTES: (continued)

8. Laser cutting apertures with trapezoidal walls and rounded corners may offer better paste release. IPC-7525 may have alternate design recommendations.
9. Board assembly site may have different recommendations for stencil design.

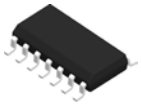

PACKAGE OUTLINE

D0014A

SOIC - 1.75 mm max height

SMALL OUTLINE INTEGRATED CIRCUIT

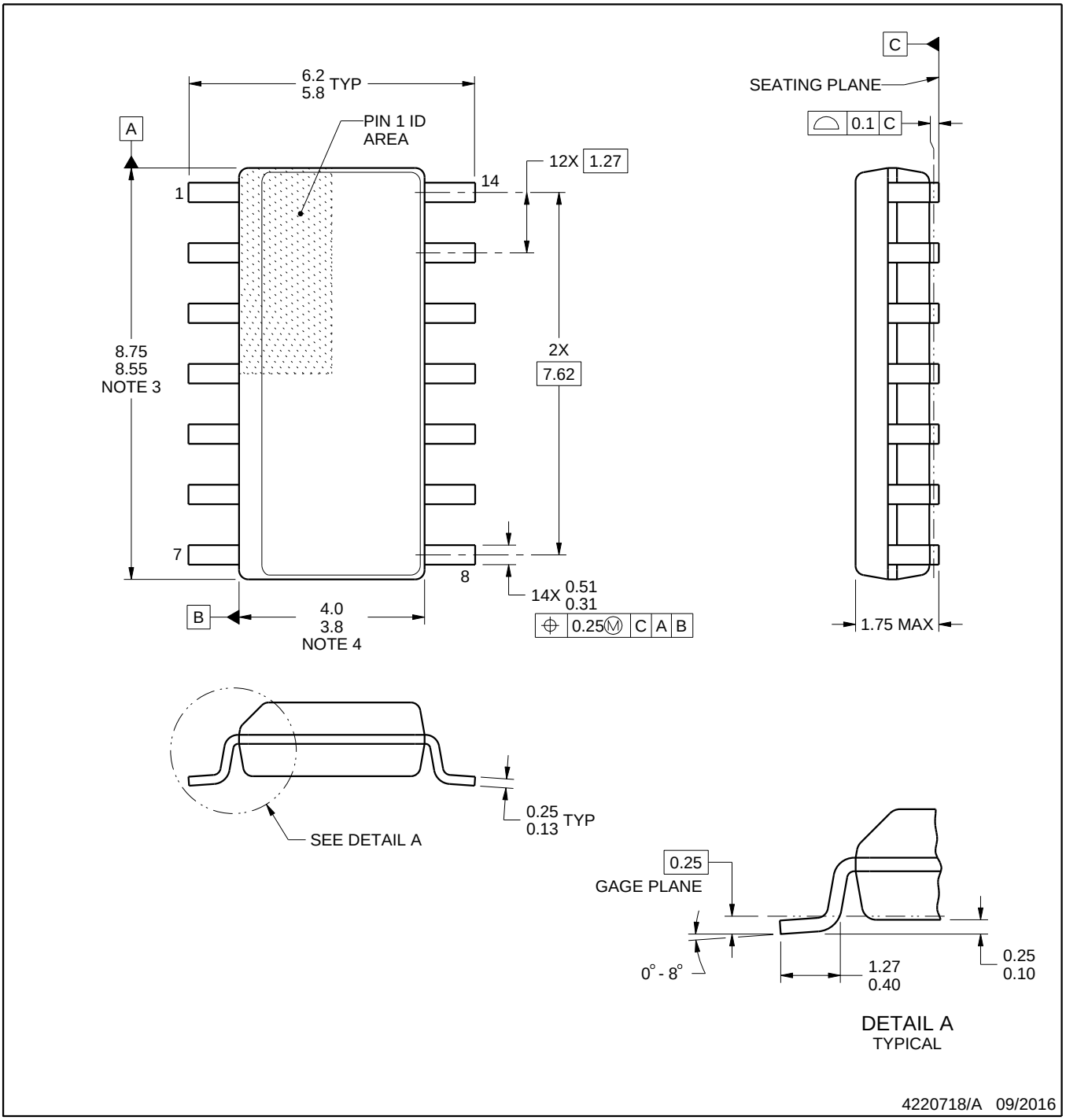

NOTES:

1. All linear dimensions are in millimeters. Dimensions in parenthesis are for reference only. Dimensioning and tolerancing per ASME Y14.5M.
2. This drawing is subject to change without notice.
3. This dimension does not include mold flash, protrusions, or gate burrs. Mold flash, protrusions, or gate burrs shall not exceed 0.15 mm, per side.
4. This dimension does not include interlead flash. Interlead flash shall not exceed 0.43 mm, per side.
5. Reference JEDEC registration MS-012, variation AB.

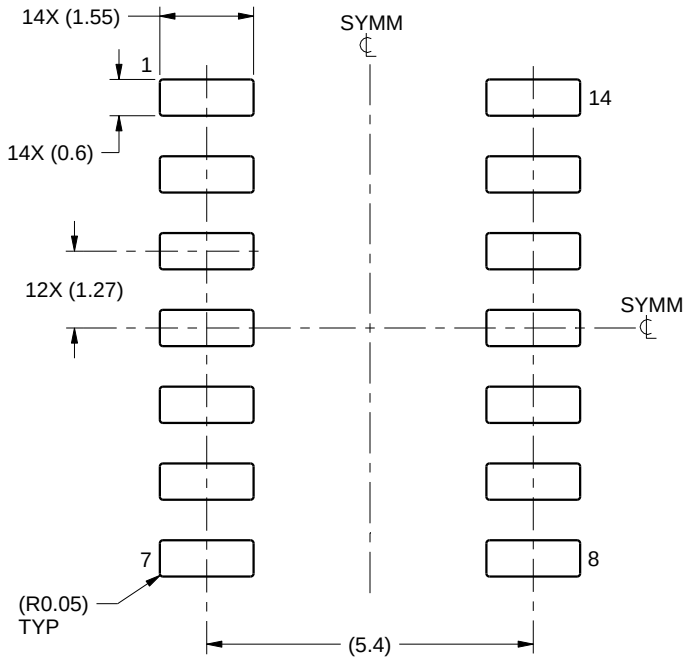

LAND PATTERN EXAMPLE
SCALE:8X

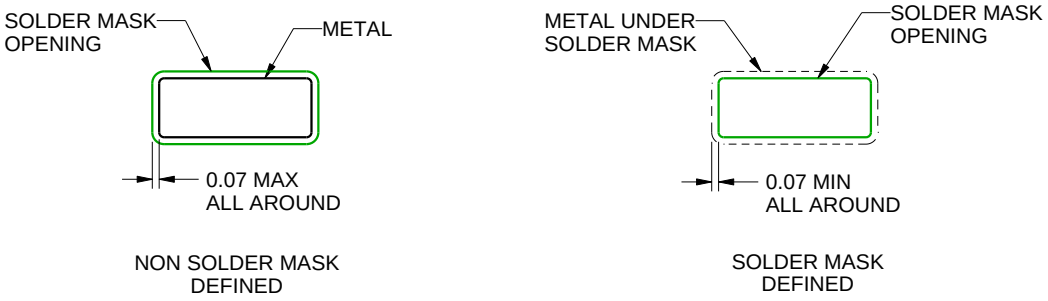

SOLDER MASK DETAILS

4220718/A 09/2016

NOTES: (continued)

6. Publication IPC-7351 may have alternate designs.
7. Solder mask tolerances between and around signal pads can vary based on board fabrication site.

EXAMPLE STENCIL DESIGN

D0014A

SOIC - 1.75 mm max height

SMALL OUTLINE INTEGRATED CIRCUIT

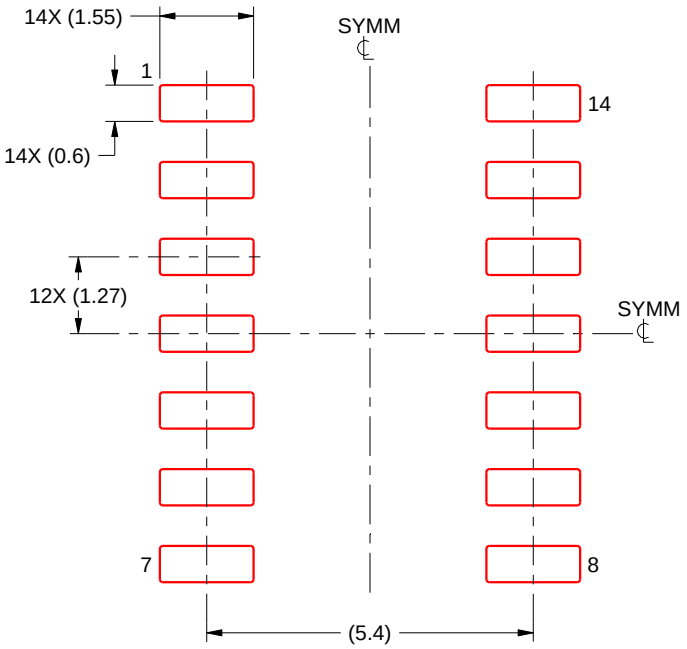

SOLDER PASTE EXAMPLE
BASED ON 0.125 mm THICK STENCIL
SCALE:8X

4220718/A 09/2016

NOTES: (continued)

8. Laser cutting apertures with trapezoidal walls and rounded corners may offer better paste release. IPC-7525 may have alternate design recommendations.
9. Board assembly site may have different recommendations for stencil design.

MECHANICAL DATA

NS (R-PDSO-G)** **PLASTIC SMALL-OUTLINE PACKAGE**

14-PINS SHOWN

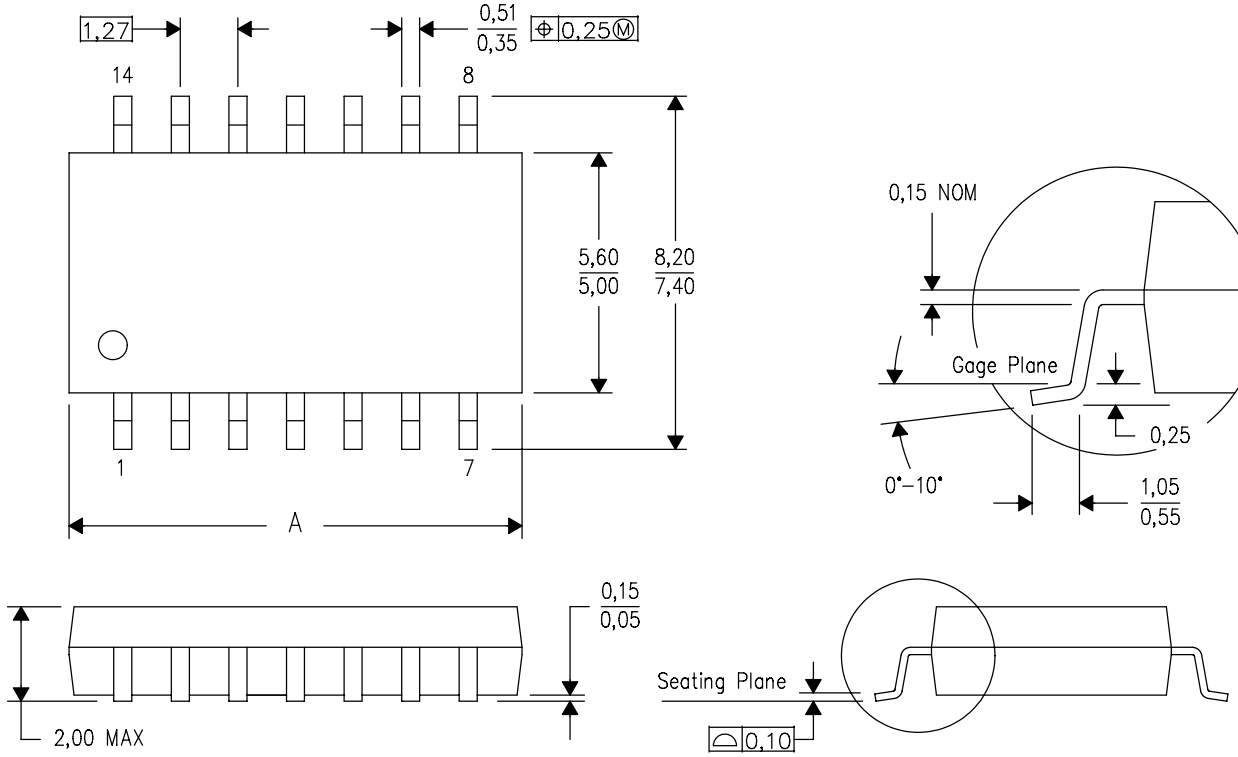

DIM \ PINS **	14	16	20	24
A MAX	10,50	10,50	12,90	15,30
A MIN	9,90	9,90	12,30	14,70

4040062/C 03/03

NOTES:
A. All linear dimensions are in millimeters.
B. This drawing is subject to change without notice.
C. Body dimensions do not include mold flash or protrusion, not to exceed 0,15.

重要なお知らせと免責事項

TI は、技術データと信頼性データ (データシートを含みます)、設計リソース (リファレンス デザインを含みます)、アプリケーションや設計に関する各種アドバイス、Web ツール、安全性情報、その他のリソースを、欠陥が存在する可能性のある「現状のまま」提供しており、商品性および特定目的に対する適合性の黙示保証、第三者の知的財産権の非侵害保証を含むいかなる保証も、明示的または黙示的にかかわらず拒否します。

これらのリソースは、TI 製品を使用する設計の経験を積んだ開発者への提供を意図したものです。(1) お客様のアプリケーションに適した TI 製品の選定、(2) お客様のアプリケーションの設計、検証、試験、(3) お客様のアプリケーションに該当する各種規格や、その他のあらゆる安全性、セキュリティ、規制、または他の要件への確実な適合に関する責任を、お客様のみが単独で負うものとします。

上記の各種リソースは、予告なく変更される可能性があります。これらのリソースは、リソースで説明されている TI 製品を使用するアプリケーションの開発の目的でのみ、TI はその使用をお客様に許諾します。これらのリソースに関して、他の目的で複製することや掲載することは禁止されています。TI や第三者の知的財産権のライセンスが付与されている訳ではありません。お客様は、これらのリソースを自身で使用した結果発生するあらゆる申し立て、損害、費用、損失、責任について、TI およびその代理人を完全に補償するものとし、TI は一切の責任を拒否します。

TI の製品は、 TI の販売条件 、 TI の総合的な品質ガイドライン 、 ti.com または TI 製品などに関連して提供される他の適用条件に従い提供されます。TI がこれらのリソースを提供することは、適用される TI の保証または他の保証の放棄の拡大や変更を意味するものではありません。 TI がカスタム、またはカスタマー仕様として明示的に指定していない限り、TI の製品は標準的なカタログに掲載される汎用機器です。

お客様がいかなる追加条項または代替条項を提案する場合も、TI はそれらに異議を唱え、拒否します。

Copyright © 2026, Texas Instruments Incorporated

最終更新日：2025 年 10 月